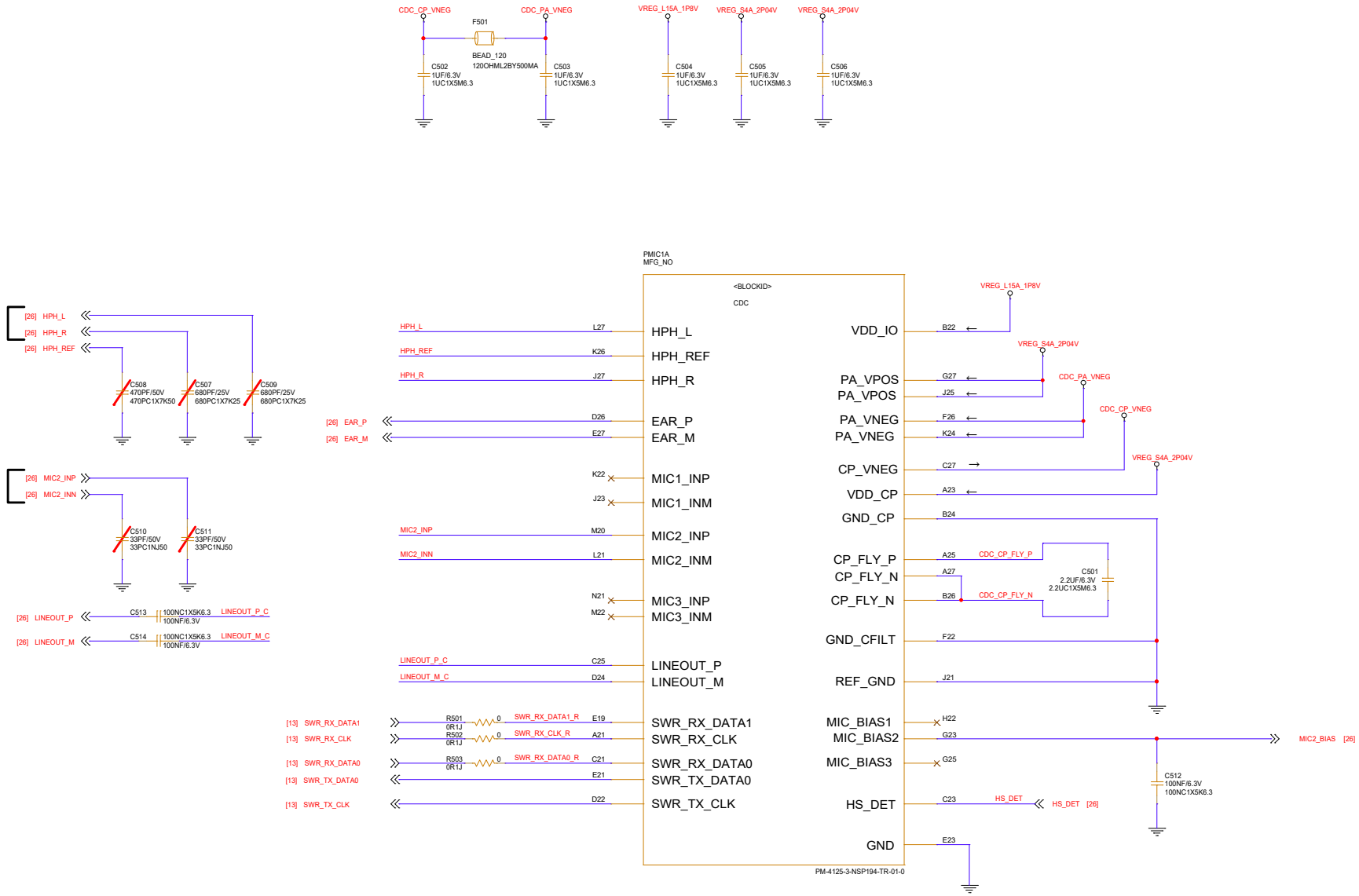

Reference Designs ARE PROVIDED "AS IS" AND "WITH ALL FAULTS". Arduino SA DISCLAIMS ALL OTHER WARRANTIES, EXPRESS OR IMPLIED, REGARDING PRODUCTS, INCLUDING BUT NOT LIMITED TO, ANY IMPLIED WARRANTIES OF MERCHANTABILITY OR FITNESS FOR A PARTICULAR PURPOSE. Arduino SA may make changes to specifications and product descriptions at any time, without notice. The Customer must not rely on the absence or characteristics of any features or instructions marked "reserved" or "undefined". Arduino SA reserves these for future definition and shall have no responsibility whatsoever for conflicts or incompatibilities arising from future changes to them. The product information on the Web Site or Materials is subject to change without notice. Do not finalize a design with this info. ARDUINO and other Arduino brands and logos are Trademarks of Arduino SA. All Arduino SA Trademarks cannot be used without owner's formal permission.
This project's hardware is licensed under the Creative Commons Attribution-ShareAlike 4.0 International License. To view a copy of this license, visit https://creativecommons.org/licenses/by-sa/4.0/deed.en

Title: PM4125-CDC		
ID: ABX00162	Version:	
Date: 01/10/2025 Time: 13:00:00	Sheet 1 of 24	

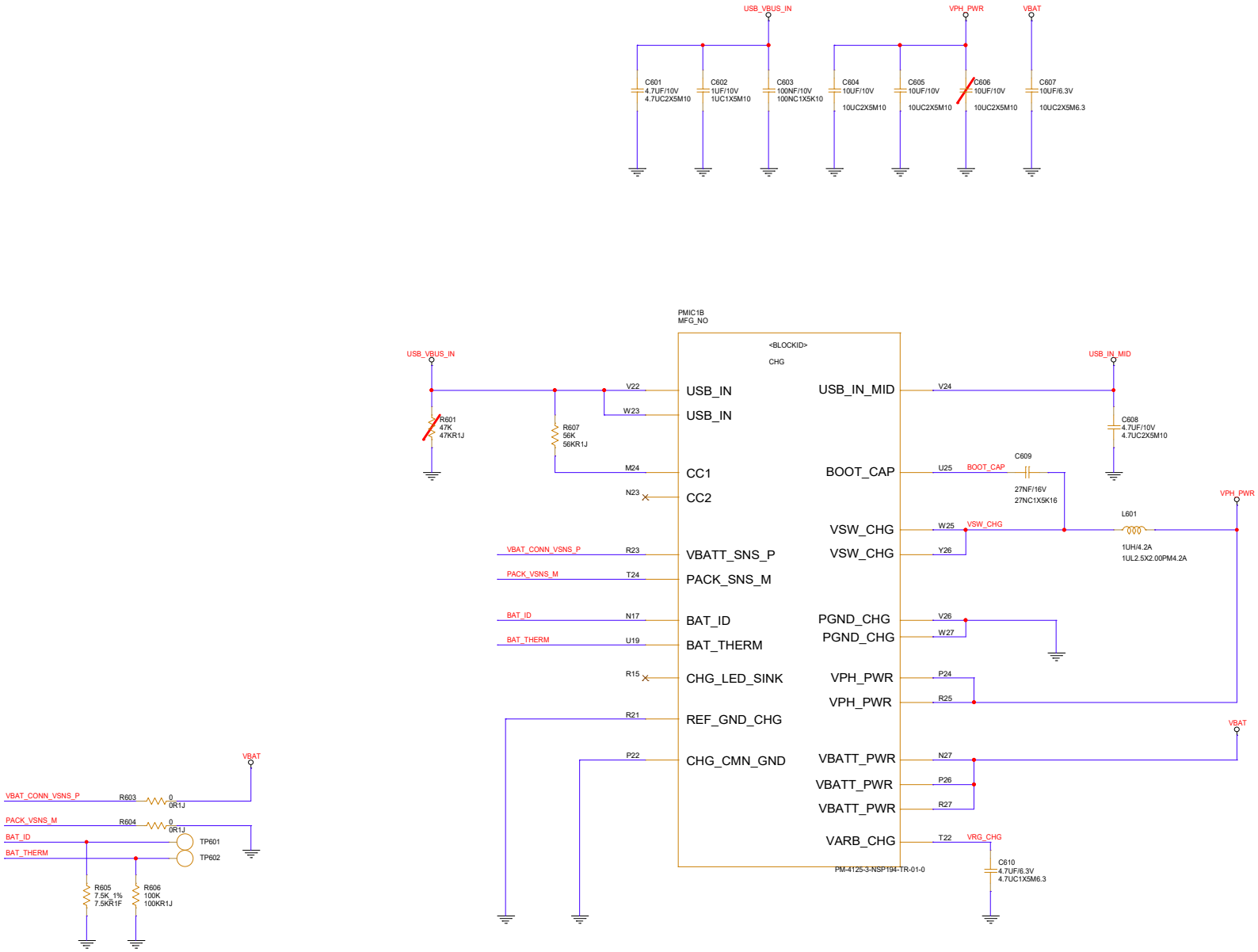

Reference Designs ARE PROVIDED "AS IS" AND "WITH ALL FAULTS". Arduino SA DISCLAIMS ALL OTHER WARRANTIES, EXPRESS OR IMPLIED, REGARDING PRODUCTS, INCLUDING BUT NOT LIMITED TO, ANY IMPLIED WARRANTIES OF MERCHANTABILITY OR FITNESS FOR A PARTICULAR PURPOSE. Arduino SA may make changes to specifications and product descriptions at any time, without notice. The Customer must not rely on the absence or characteristics of any features or instructions marked "reserved" or "undefined". Arduino SA reserves these for future definition and shall have no responsibility whatsoever for conflicts or incompatibilities arising from future changes to them. The product information on the Web Site or Materials is subject to change without notice. Do not finalize a design with this info. ARDUINO and other Arduino brands and logos are Trademarks of Arduino SA. All Arduino SA Trademarks cannot be used without owner's formal permission.
This project's hardware is licensed under the Creative Commons Attribution-ShareAlike 4.0 International License. To view a copy of this license, visit https://creativecommons.org/licenses/by-sa/4.0/deed.en

Title: PM4125-CHG		
ID: ABX00162	Version:	
Date: 01/10/2025	Time: 13:00:00	Sheet 2 of 24

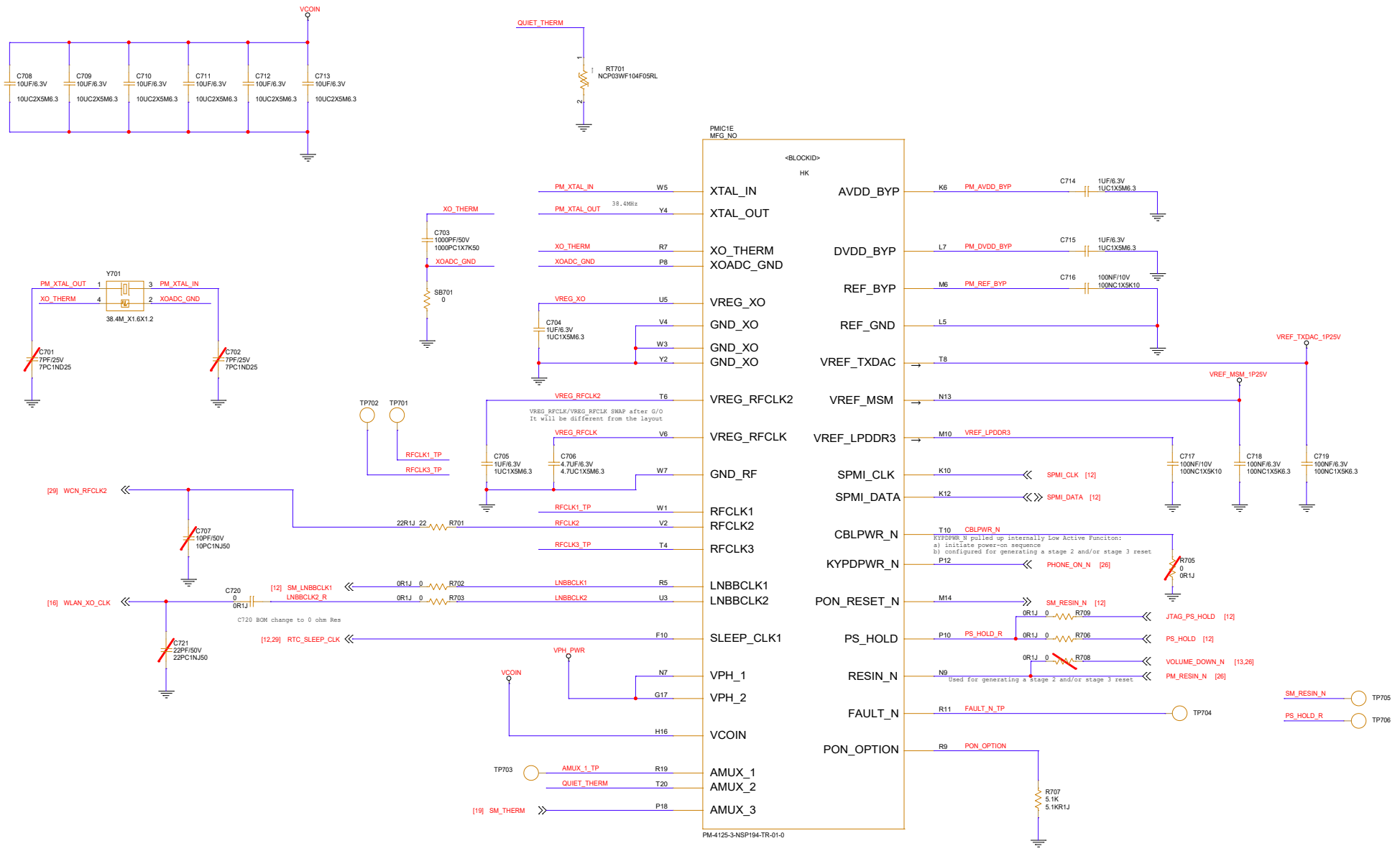

Reference Designs ARE PROVIDED "AS IS" AND "WITH ALL FAULTS". Arduino SA DISCLAIMS ALL OTHER WARRANTIES, EXPRESS OR IMPLIED, REGARDING PRODUCTS, INCLUDING BUT NOT LIMITED TO, ANY IMPLIED WARRANTIES OF MERCHANTABILITY OR FITNESS FOR A PARTICULAR PURPOSE. Arduino SA may make changes to specifications and product descriptions at any time, without notice. The Customer must not rely on the absence or characteristics of any features or instructions marked "reserved" or "undefined". Arduino SA reserves these for future definition and shall have no responsibility whatsoever for conflicts or incompatibilities arising from future changes to them. The product information on the Web Site or Materials is subject to change without notice. Do not finalize a design with this info. ARDUINO and other Arduino brands and logos are Trademarks of Arduino SA. All Arduino SA Trademarks cannot be used without owner's formal permission.
This project's hardware is licensed under the Creative Commons Attribution-ShareAlike 4.0 International License. To view a copy of this license, visit https://creativecommons.org/licenses/by-sa/4.0/deed.en

Title: PM4125-HK		
ID: ABX00162	Version:	
Date: 01/10/2025 Time: 13:00:00	Sheet 3 of 24	

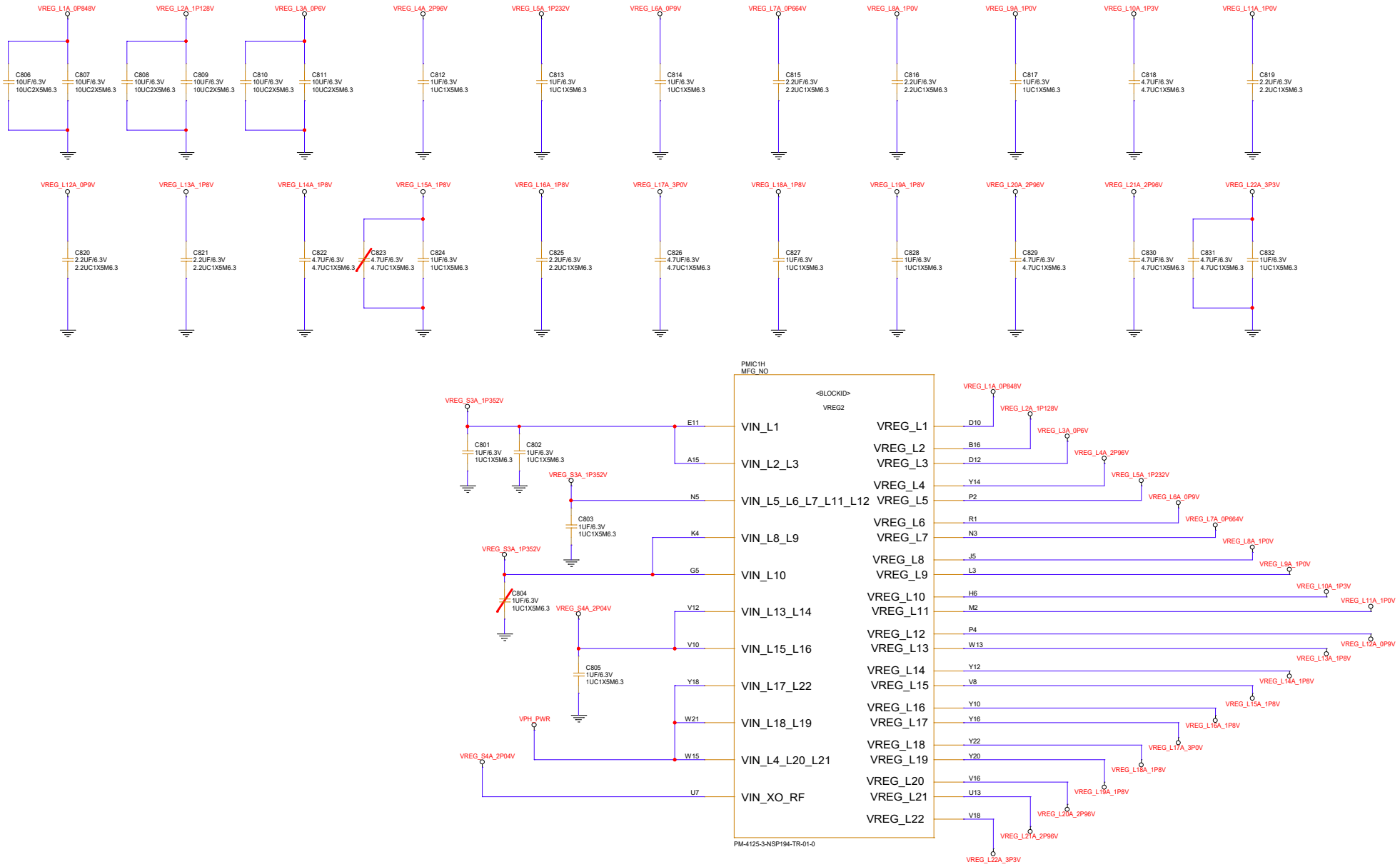

Reference Designs ARE PROVIDED "AS IS" AND "WITH ALL FAULTS". Arduino SA DISCLAIMS ALL OTHER WARRANTIES, EXPRESS OR IMPLIED, REGARDING PRODUCTS, INCLUDING BUT NOT LIMITED TO, ANY IMPLIED WARRANTIES OF MERCHANTABILITY OR FITNESS FOR A PARTICULAR PURPOSE. Arduino SA may make changes to specifications and product descriptions at any time, without notice. The Customer must not rely on the absence or characteristics of any features or instructions marked "reserved" or "undefined". Arduino SA reserves these for future definition and shall have no responsibility whatsoever for conflicts or incompatibilities arising from future changes to them. The product information on the Web Site or Materials is subject to change without notice. Do not finalize a design with this info. ARDUINO and other Arduino brands and logos are Trademarks of Arduino SA. All Arduino SA Trademarks cannot be used without owner's formal permission.
This project's hardware is licensed under the Creative Commons Attribution-ShareAlike 4.0 International License. To view a copy of this license, visit https://creativecommons.org/licenses/by-sa/4.0/deed.en

Title: PM4125-LDO		
ID: ABX00162	Version:	
Date: 01/10/2025 Time: 13:00:00	Sheet 4 of 24	

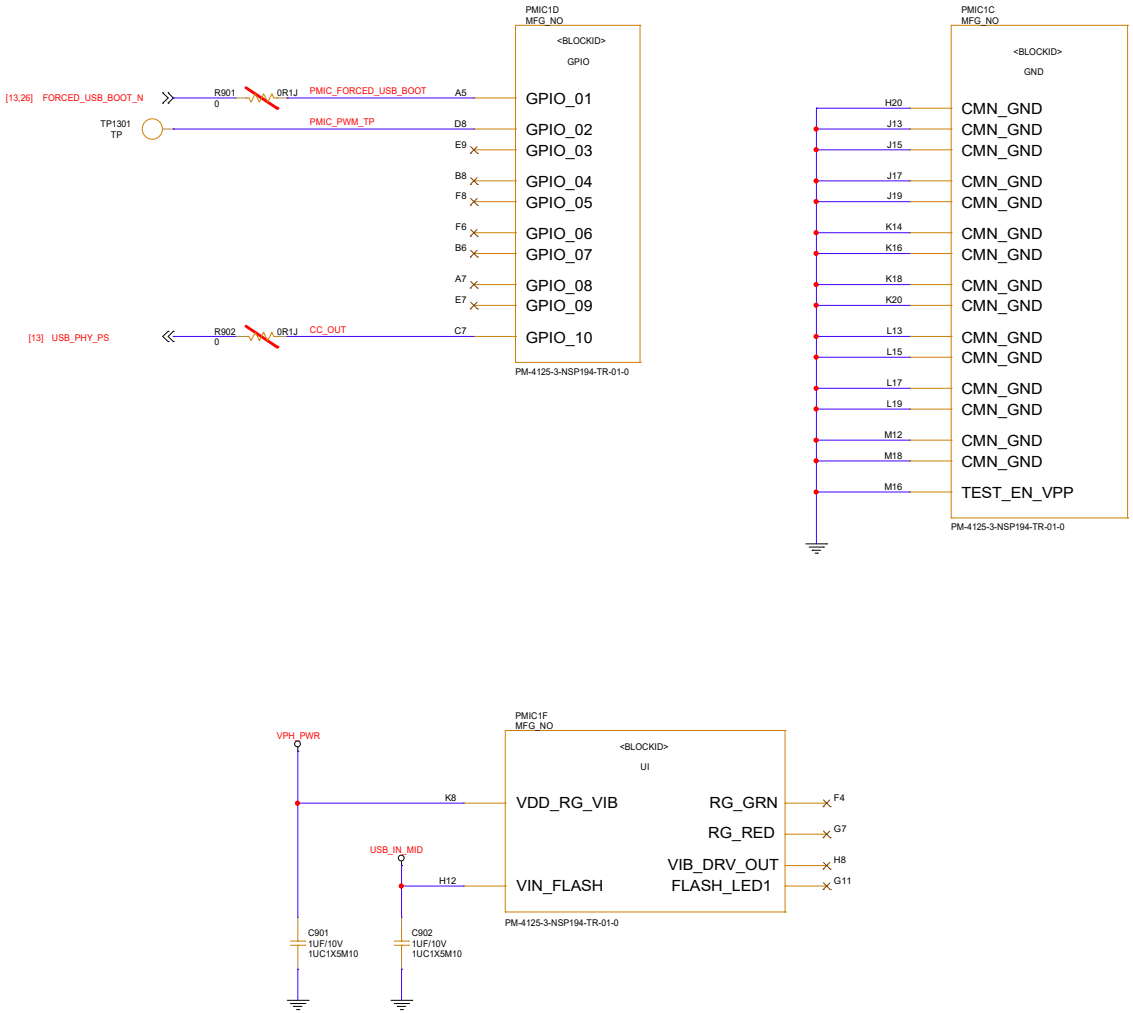

Reference Designs ARE PROVIDED "AS IS" AND "WITH ALL FAULTS". Arduino SA DISCLAIMS ALL OTHER WARRANTIES, EXPRESS OR IMPLIED, REGARDING PRODUCTS, INCLUDING BUT NOT LIMITED TO, ANY IMPLIED WARRANTIES OF MERCHANTABILITY OR FITNESS FOR A PARTICULAR PURPOSE. Arduino SA may make changes to specifications and product descriptions at any time, without notice. The Customer must not rely on the absence or characteristics of any features or instructions marked "reserved" or "undefined". Arduino SA reserves these for future definition and shall have no responsibility whatsoever for conflicts or incompatibilities arising from future changes to them. The product information on the Web Site or Materials is subject to change without notice. Do not finalize a design with this info. ARDUINO and other Arduino brands and logos are Trademarks of Arduino SA. All Arduino SA Trademarks cannot be used without owner's formal permission.
This project's hardware is licensed under the Creative Commons Attribution-ShareAlike 4.0 International License. To view a copy of this license, visit https://creativecommons.org/licenses/by-sa/4.0/deed.en

Title: PM4125-UI		
ID: ABX00162	Version:	
Date: 01/10/2025 Time: 13:00:00	Sheet 5 of 24	

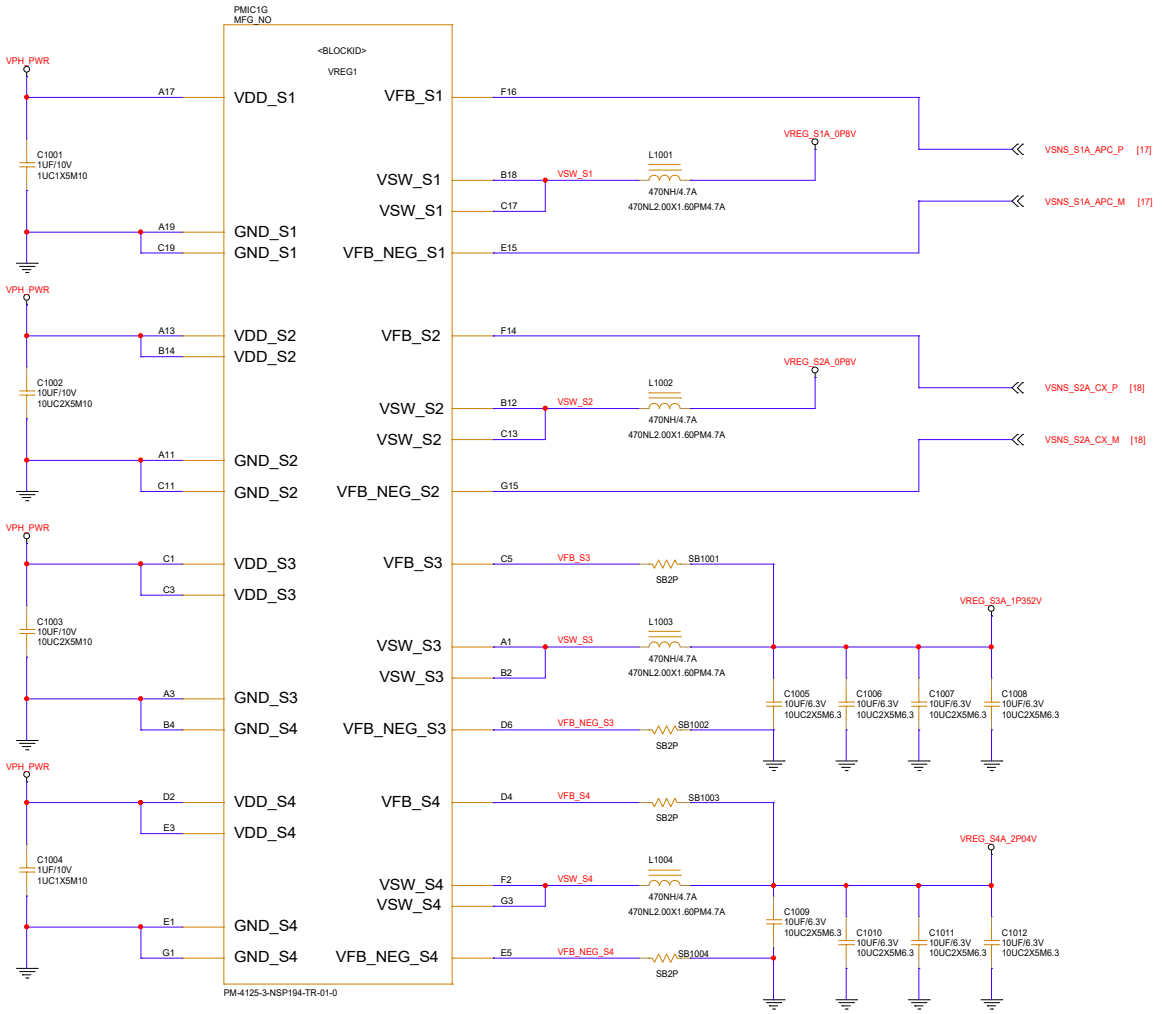

Reference Designs ARE PROVIDED "AS IS" AND "WITH ALL FAULTS". Arduino SA DISCLAIMS ALL OTHER WARRANTIES, EXPRESS OR IMPLIED, REGARDING PRODUCTS, INCLUDING BUT NOT LIMITED TO, ANY IMPLIED WARRANTIES OF MERCHANTABILITY OR FITNESS FOR A PARTICULAR PURPOSE. Arduino SA may make changes to specifications and product descriptions at any time, without notice. The Customer must not rely on the absence or characteristics of any features or instructions marked "reserved" or "undefined". Arduino SA reserves these for future definition and shall have no responsibility whatsoever for conflicts or incompatibilities arising from future changes to them. The product information on the Web Site or Materials is subject to change without notice. Do not finalize a design with this info. ARDUINO and other Arduino brands and logos are Trademarks of Arduino SA. All Arduino SA Trademarks cannot be used without owner's formal permission.
This project's hardware is licensed under the Creative Commons Attribution-ShareAlike 4.0 International License. To view a copy of this license, visit https://creativecommons.org/licenses/by-sa/4.0/deed.en

Title: PM4125-VREG		
ID: ABX00162	Version:	
Date: 01/10/2025 Time: 13:00:00	Sheet 6 of 24	

3.3V to 1.8V level shift

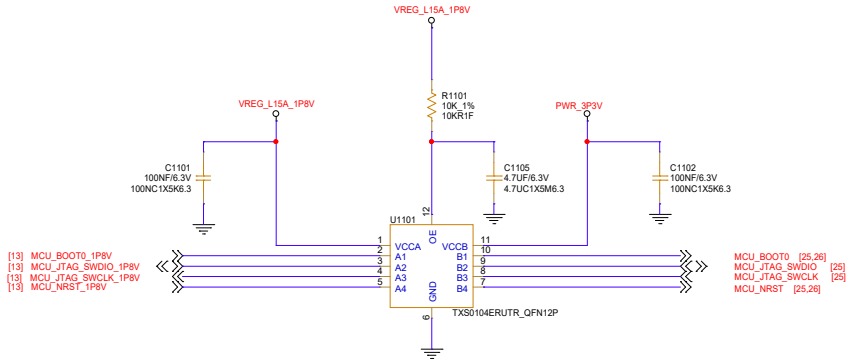

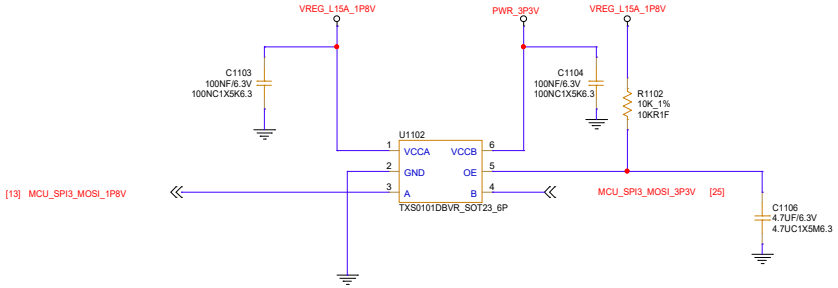

Reference Designs ARE PROVIDED "AS IS" AND "WITH ALL FAULTS". Arduino SA DISCLAIMS ALL OTHER WARRANTIES, EXPRESS OR IMPLIED, REGARDING PRODUCTS, INCLUDING BUT NOT LIMITED TO, ANY IMPLIED WARRANTIES OF MERCHANTABILITY OR FITNESS FOR A PARTICULAR PURPOSE. Arduino SA may make changes to specifications and product descriptions at any time, without notice. The Customer must not rely on the absence or characteristics of any features or instructions marked "reserved" or "undefined". Arduino SA reserves these for future definition and shall have no responsibility whatsoever for conflicts or incompatibilities arising from future changes to them. The product information on the Web Site or Materials is subject to change without notice. Do not finalize a design with this info. ARDUINO and other Arduino brands and logos are Trademarks of Arduino SA. All Arduino SA Trademarks cannot be used without owner's formal permission.
This project's hardware is licensed under the Creative Commons Attribution-ShareAlike 4.0 International License. To view a copy of this license, visit https://creativecommons.org/licenses/by-sa/4.0/deed.en

Title: Level Shift		
ID: ABX00162	Version:	
Date: 01/10/2025 Time: 13:00:00	Sheet 7 of 24	

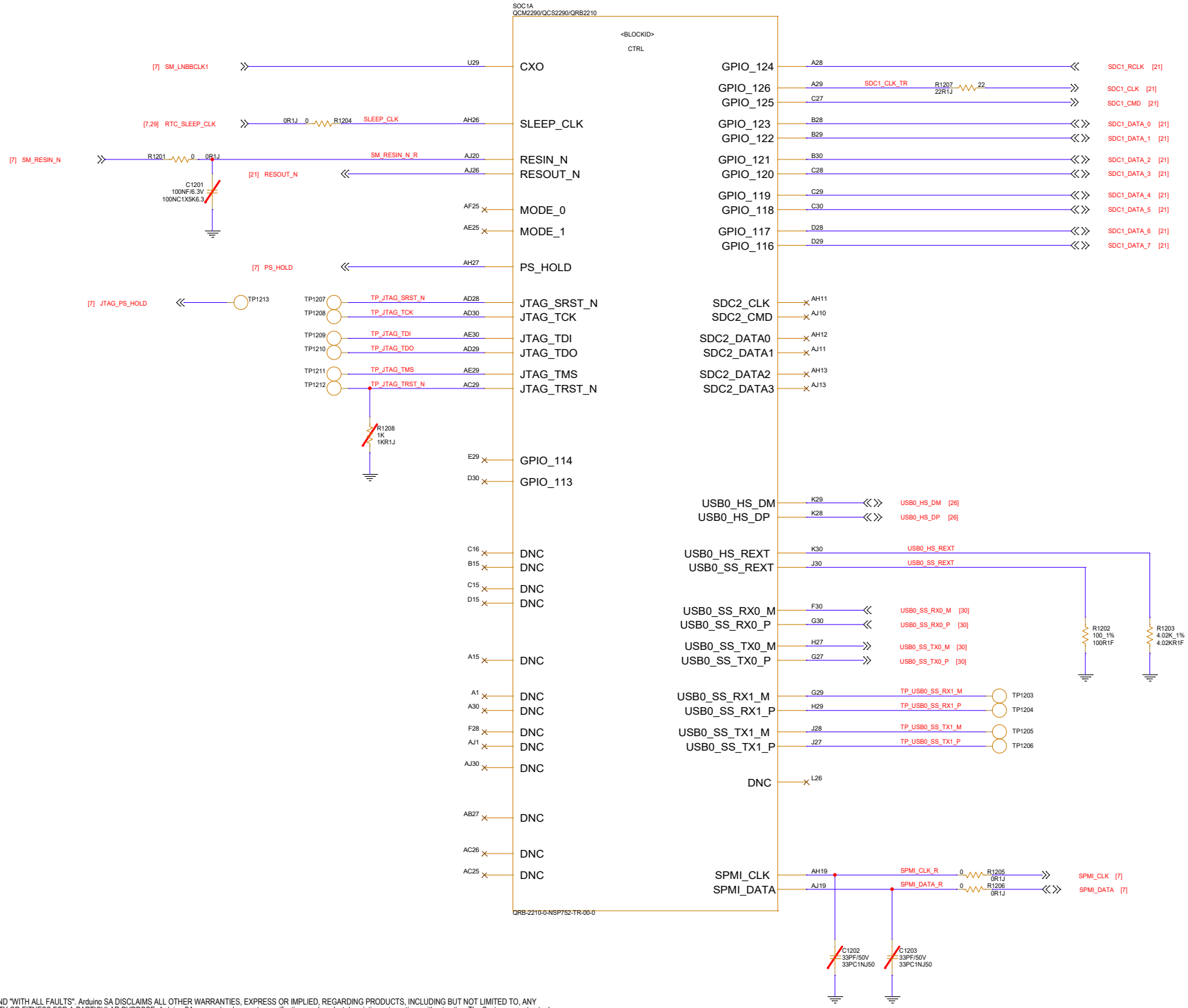

Reference Designs ARE PROVIDED "AS IS" AND "WITH ALL FAULTS". Arduino SA DISCLAIMS ALL OTHER WARRANTIES, EXPRESS OR IMPLIED, REGARDING PRODUCTS, INCLUDING BUT NOT LIMITED TO, ANY IMPLIED WARRANTIES OF MERCHANTABILITY OR FITNESS FOR A PARTICULAR PURPOSE. Arduino SA may make changes to specifications and product descriptions at any time, without notice. The Customer must not rely on the absence or characteristics of any features or instructions marked "reserved" or "undefined". Arduino SA reserves these for future definition and shall have no responsibility whatsoever for conflicts or incompatibilities arising from future changes to them. The product information on the Web Site or Materials is subject to change without notice. Do not finalize a design with this info. ARDUINO and other Arduino brands and logos are Trademarks of Arduino SA. All Arduino SA Trademarks cannot be used without owner's formal permission.
This project's hardware is licensed under the Creative Commons Attribution-ShareAlike 4.0 International License. To view a copy of this license, visit https://creativecommons.org/licenses/by-sa/4.0/deed.en

Title: QRB2210-Control	
ID: ABX00162	Version:
Date: 01/10/2025 Time: 13:00:00	Sheet 8 of 24

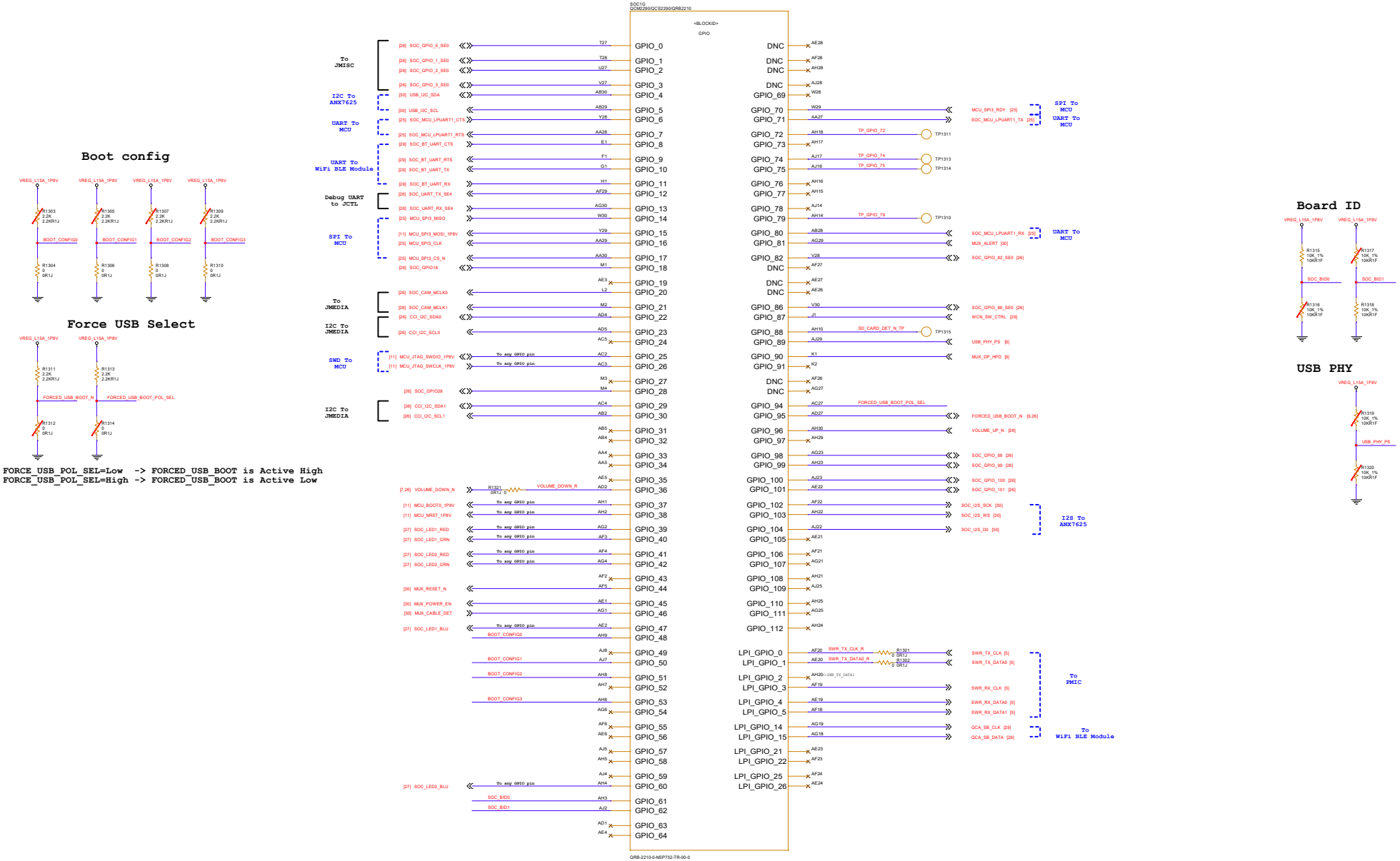

Reference Designs ARE PROVIDED "AS IS" AND "WITH ALL FAULTS". Arduino SA DISCLAIMS ALL OTHER WARRANTIES, EXPRESS OR IMPLIED, REGARDING PRODUCTS, INCLUDING BUT NOT LIMITED TO, ANY IMPLIED WARRANTIES OF MERCHANTABILITY OR FITNESS FOR A PARTICULAR PURPOSE. Arduino SA may make changes to specifications and product descriptions at any time, without notice. The Customer must not rely on the absence or characteristics of any features or instructions marked "reserved" or "undefined". Arduino SA reserves these for future definition and shall have no responsibility whatsoever for conflicts or incompatibilities arising from future changes to them. The product information on the Web Site or Materials is subject to change without notice. Do not finalize a design with this info. ARDUINO and other Arduino brands and logos are Trademarks of Arduino SA. All Arduino SA Trademarks cannot be used without owner's formal permission.
This project's hardware is licensed under the Creative Commons Attribution-ShareAlike 4.0 International License. To view a copy of this license, visit https://creativecommons.org/licenses/by-sa/4.0/deed.en

Title:	QRB2210-GPIO
ID:	ABX00162
Version:	
Date:	01/12/2023
Time:	12:00:00
Sheet	4 of 24

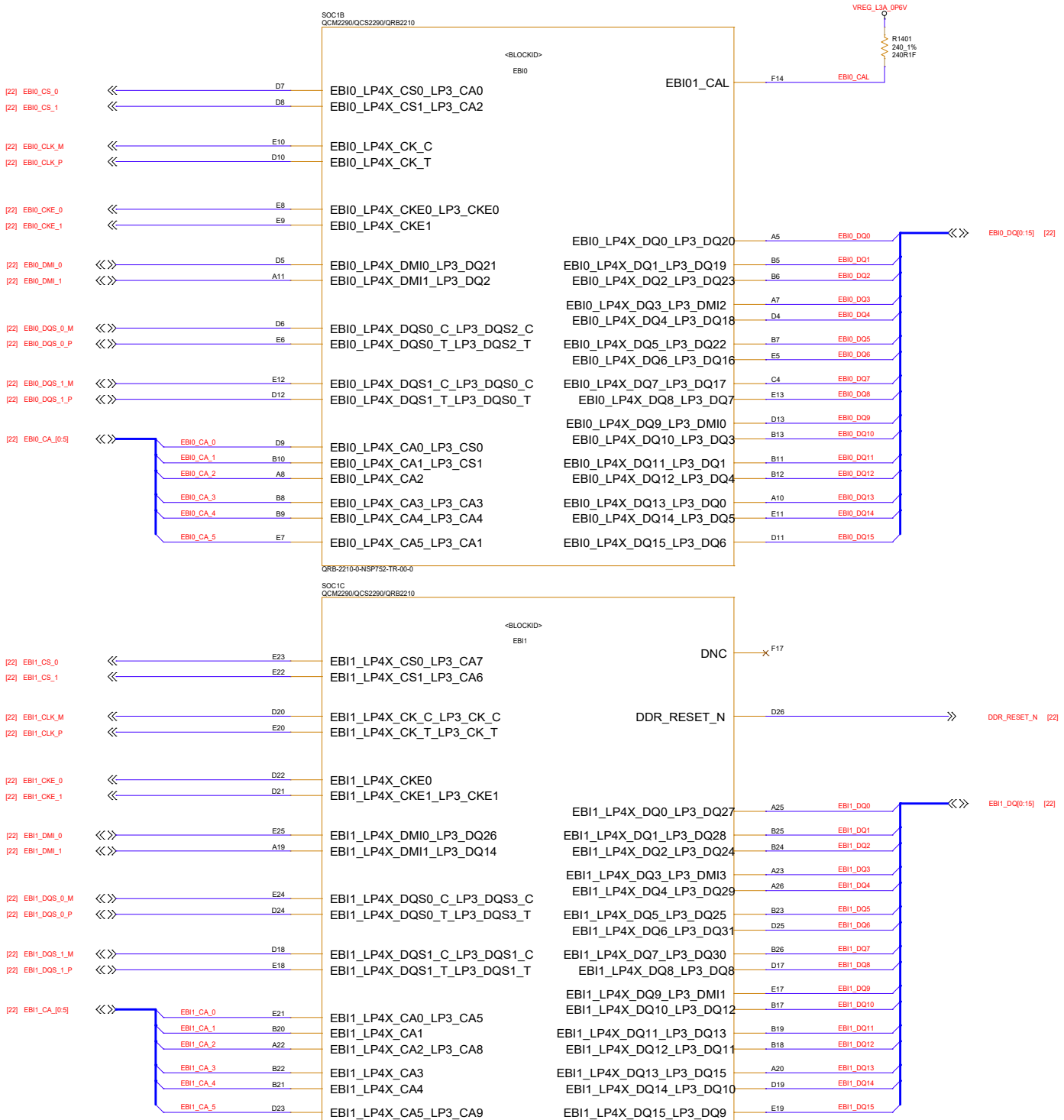

Reference Designs ARE PROVIDED "AS IS" AND "WITH ALL FAULTS". Arduino SA DISCLAIMS ALL OTHER WARRANTIES, EXPRESS OR IMPLIED, REGARDING PRODUCTS, INCLUDING BUT NOT LIMITED TO, ANY IMPLIED WARRANTIES OF MERCHANTABILITY OR FITNESS FOR A PARTICULAR PURPOSE. Arduino SA may make changes to specifications and product descriptions at any time, without notice. The Customer must not rely on the absence or characteristics of any features or instructions marked "reserved" or "undefined". Arduino SA reserves these for future definition and shall have no responsibility whatsoever for conflicts or incompatibilities arising from future changes to them. The product information on the Web Site or Materials is subject to change without notice. Do not finalize a design with this info. ARDUINO and other Arduino brands and logos are Trademarks of Arduino SA. All Arduino SA Trademarks cannot be used without owner's formal permission.
This project's hardware is licensed under the Creative Commons Attribution-ShareAlike 4.0 International License. To view a copy of this license, visit https://creativecommons.org/licenses/by-sa/4.0/deed.en

Title: QRB2210-EBI		
ID: ABX00162	Version:	
Date: 01/10/2025 Time: 13:00:00	Sheet 10 of 24	

Reference Designs ARE PROVIDED "AS IS" AND "WITH ALL FAULTS". Arduino SA DISCLAIMS ALL OTHER WARRANTIES, EXPRESS OR IMPLIED, REGARDING PRODUCTS, INCLUDING BUT NOT LIMITED TO, ANY IMPLIED WARRANTIES OF MERCHANTABILITY OR FITNESS FOR A PARTICULAR PURPOSE. Arduino SA may make changes to specifications and product descriptions at any time, without notice. The Customer must not rely on the absence or characteristics of any features or instructions marked "reserved" or "undefined". Arduino SA reserves these for future definition and shall have no responsibility whatsoever for conflicts or incompatibilities arising from future changes to them. The product information on the Web Site or Materials is subject to change without notice. Do not finalize a design with this info. ARDUINO and other Arduino brands and logos are Trademarks of Arduino SA. All Arduino SA Trademarks cannot be used without owner's formal permission.
This project's hardware is licensed under the Creative Commons Attribution-ShareAlike 4.0 International License. To view a copy of this license, visit https://creativecommons.org/licenses/by-sa/4.0/deed.en

Title: QRB2210-MIPI		
ID: ABX00162	Version:	
Date: 01/10/2025 Time: 13:00:00	Sheet 11 of 24	

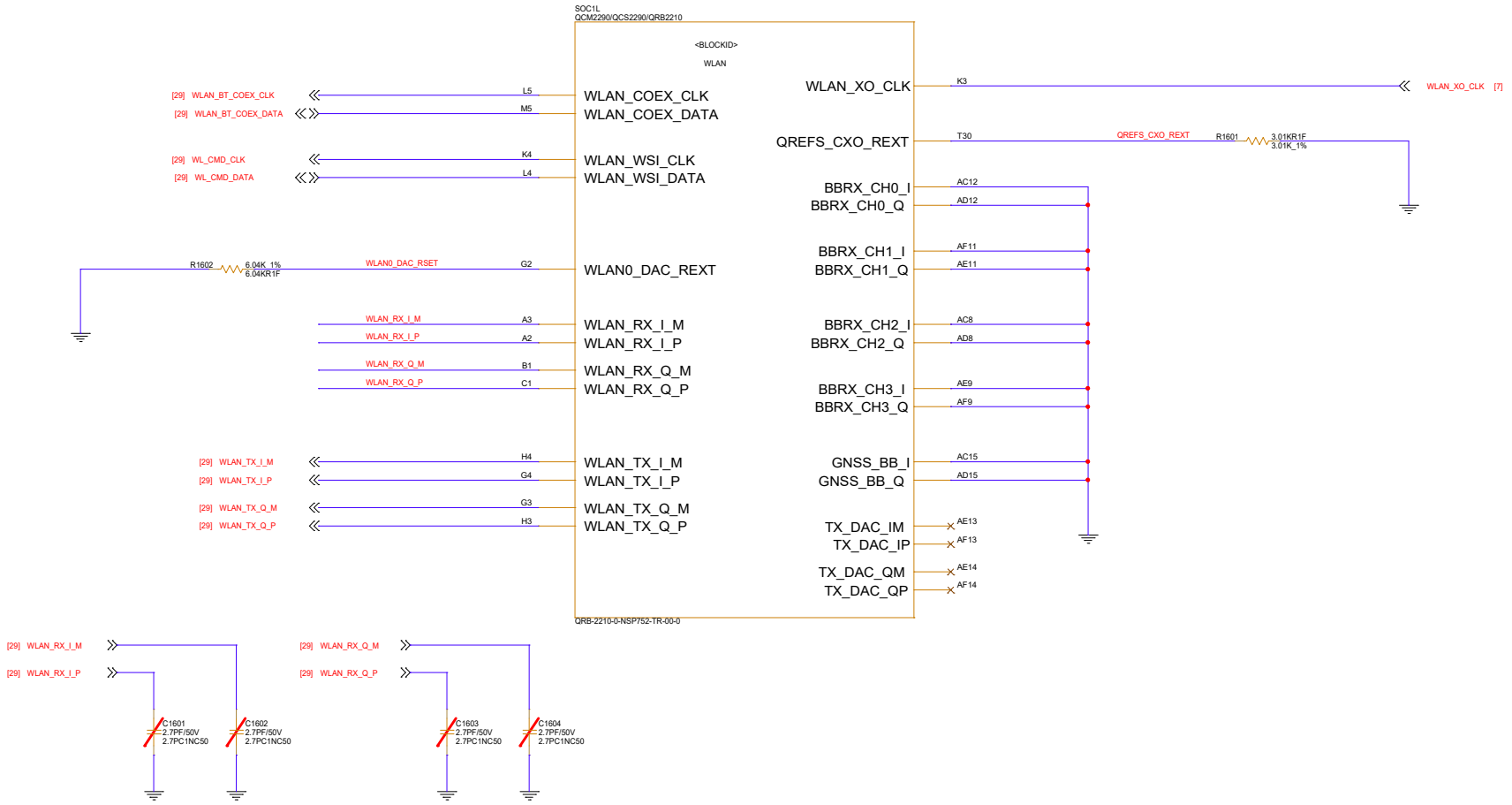

Reference Designs ARE PROVIDED "AS IS" AND "WITH ALL FAULTS". Arduino SA DISCLAIMS ALL OTHER WARRANTIES, EXPRESS OR IMPLIED, REGARDING PRODUCTS, INCLUDING BUT NOT LIMITED TO, ANY IMPLIED WARRANTIES OF MERCHANTABILITY OR FITNESS FOR A PARTICULAR PURPOSE. Arduino SA may make changes to specifications and product descriptions at any time, without notice. The Customer must not rely on the absence or characteristics of any features or instructions marked "reserved" or "undefined". Arduino SA reserves these for future definition and shall have no responsibility whatsoever for conflicts or incompatibilities arising from future changes to them. The product information on the Web Site or Materials is subject to change without notice. Do not finalize a design with this info. ARDUINO and other Arduino brands and logos are Trademarks of Arduino SA. All Arduino SA Trademarks cannot be used without owner's formal permission.
This project's hardware is licensed under the Creative Commons Attribution-ShareAlike 4.0 International License. To view a copy of this license, visit https://creativecommons.org/licenses/by-sa/4.0/deed.en

Title: QRB2210-WLAN			
ID: ABX00162		Version:	
Date: 01/10/2025	Time: 13:00:00	Sheet 12 of 24	

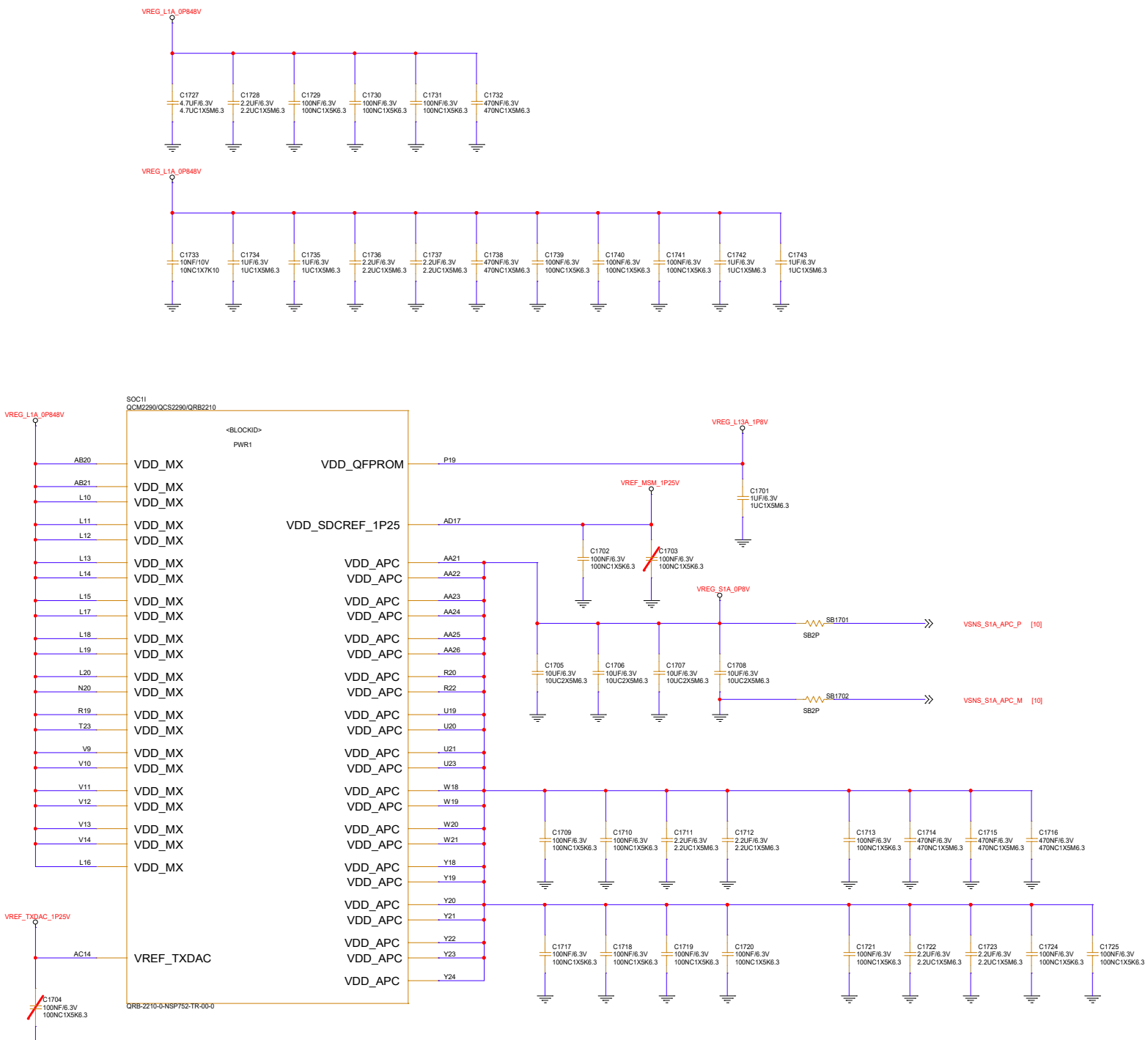

Reference Designs ARE PROVIDED "AS IS" AND "WITH ALL FAULTS". Arduino SA DISCLAIMS ALL OTHER WARRANTIES, EXPRESS OR IMPLIED, REGARDING PRODUCTS, INCLUDING BUT NOT LIMITED TO, ANY IMPLIED WARRANTIES OF MERCHANTABILITY OR FITNESS FOR A PARTICULAR PURPOSE. Arduino SA may make changes to specifications and product descriptions at any time, without notice. The Customer must not rely on the absence or characteristics of any features or instructions marked "reserved" or "undefined". Arduino SA reserves these for future definition and shall have no responsibility whatsoever for conflicts or incompatibilities arising from future changes to them. The product information on the Web Site or Materials is subject to change without notice. Do not finalize a design with this info. ARDUINO and other Arduino brands and logos are Trademarks of Arduino SA. All Arduino SA Trademarks cannot be used without owner's formal permission.
This project's hardware is licensed under the Creative Commons Attribution-ShareAlike 4.0 International License. To view a copy of this license, visit https://creativecommons.org/licenses/by-sa/4.0/deed.en

Title: QRB2210-PWR1			
ID: ABX00162		Version:	
Date: 01/10/2025	Time: 13:00:00	Sheet 13 of 24	

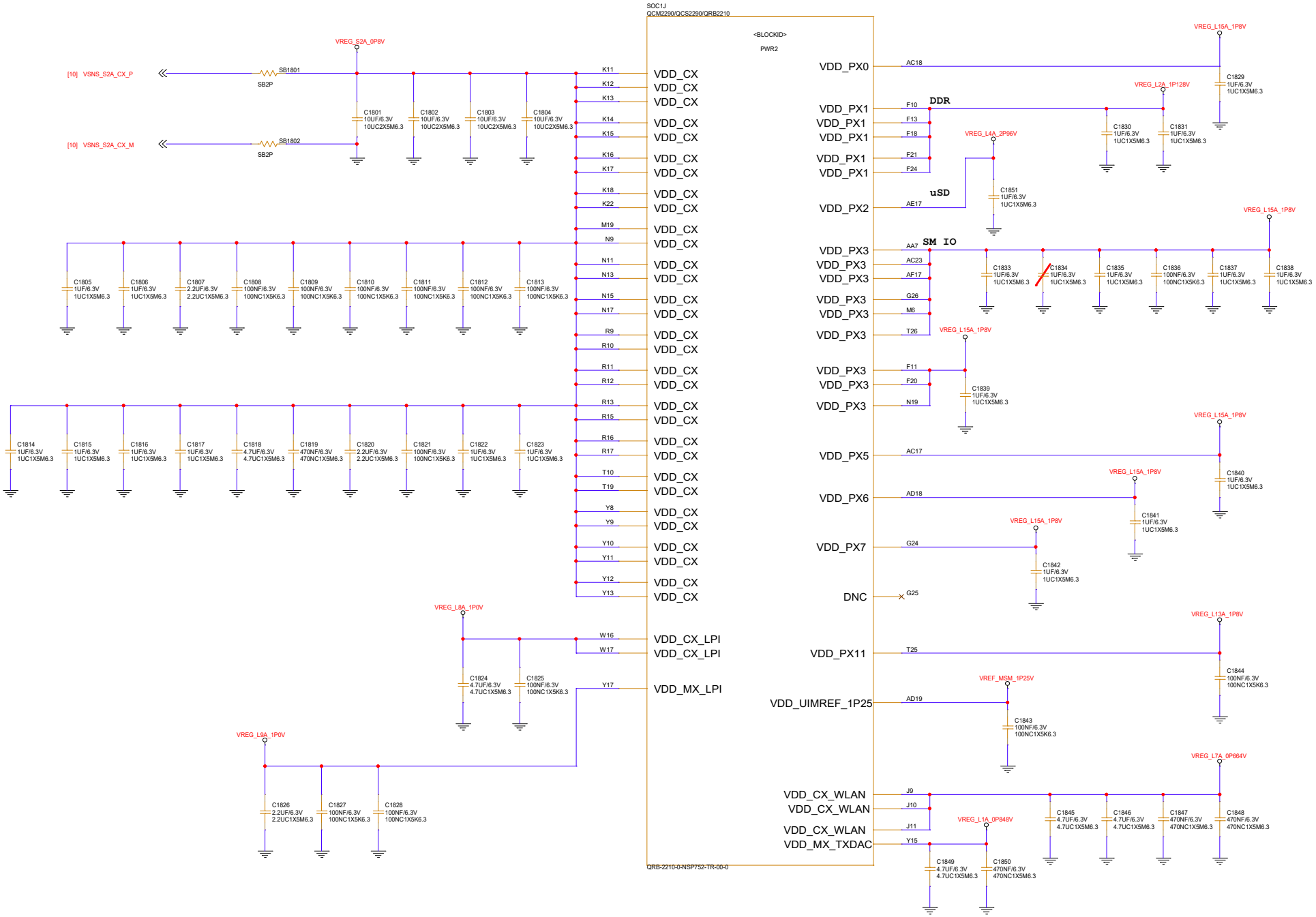

Reference Designs ARE PROVIDED "AS IS" AND "WITH ALL FAULTS". Arduino SA DISCLAIMS ALL OTHER WARRANTIES, EXPRESS OR IMPLIED, REGARDING PRODUCTS, INCLUDING BUT NOT LIMITED TO, ANY IMPLIED WARRANTIES OF MERCHANTABILITY OR FITNESS FOR A PARTICULAR PURPOSE. Arduino SA may make changes to specifications and product descriptions at any time, without notice. The Customer must not rely on the absence or characteristics of any features or instructions marked "reserved" or "undefined". Arduino SA reserves these for future definition and shall have no responsibility whatsoever for conflicts or incompatibilities arising from future changes to them. The product information on the Web Site or Materials is subject to change without notice. Do not finalize a design with this info. ARDUINO and other Arduino brands and logos are Trademarks of Arduino SA. All Arduino SA Trademarks cannot be used without owner's formal permission.
This project's hardware is licensed under the Creative Commons Attribution-ShareAlike 4.0 International License. To view a copy of this license, visit https://creativecommons.org/licenses/by-sa/4.0/deed.en

Title: QRB2210-PWR2		
ID: ABX00162	Version:	
Date: 01/10/2025	Time: 13:00:00	Sheet 14 of 24

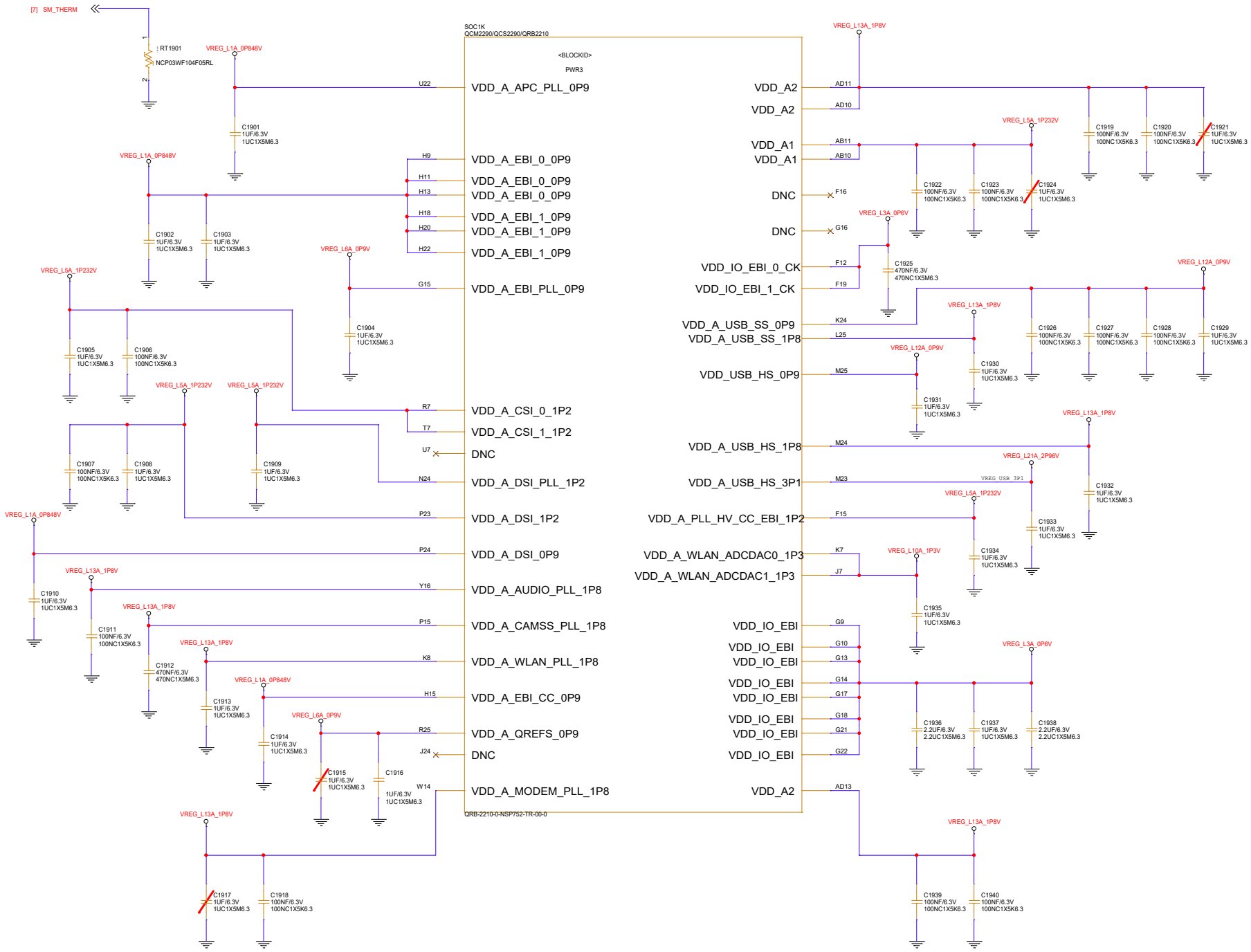

Reference Designs ARE PROVIDED "AS IS" AND "WITH ALL FAULTS". Arduino SA DISCLAIMS ALL OTHER WARRANTIES, EXPRESS OR IMPLIED, REGARDING PRODUCTS, INCLUDING BUT NOT LIMITED TO, ANY IMPLIED WARRANTIES OF MERCHANTABILITY OR FITNESS FOR A PARTICULAR PURPOSE. Arduino SA may make changes to specifications and product descriptions at any time, without notice. The Customer must not rely on the absence or characteristics of any features or instructions marked "reserved" or "undefined". Arduino SA reserves these for future definition and shall have no responsibility whatsoever for conflicts or incompatibilities arising from future changes to them. The product information on the Web Site or Materials is subject to change without notice. Do not finalize a design with this info. ARDUINO and other Arduino brands and logos are Trademarks of Arduino SA. All Arduino SA Trademarks cannot be used without owner's formal permission.
This project's hardware is licensed under the Creative Commons Attribution-ShareAlike 4.0 International License. To view a copy of this license, visit https://creativecommons.org/licenses/by-sa/4.0/deed.en

Title:	QRB2210-PWR3
ID:	ABX00162
Version:	
Date: 01/10/2025	Time: 13:00:00
Sheet	15 of 24

CC BY SA

ARDUINO

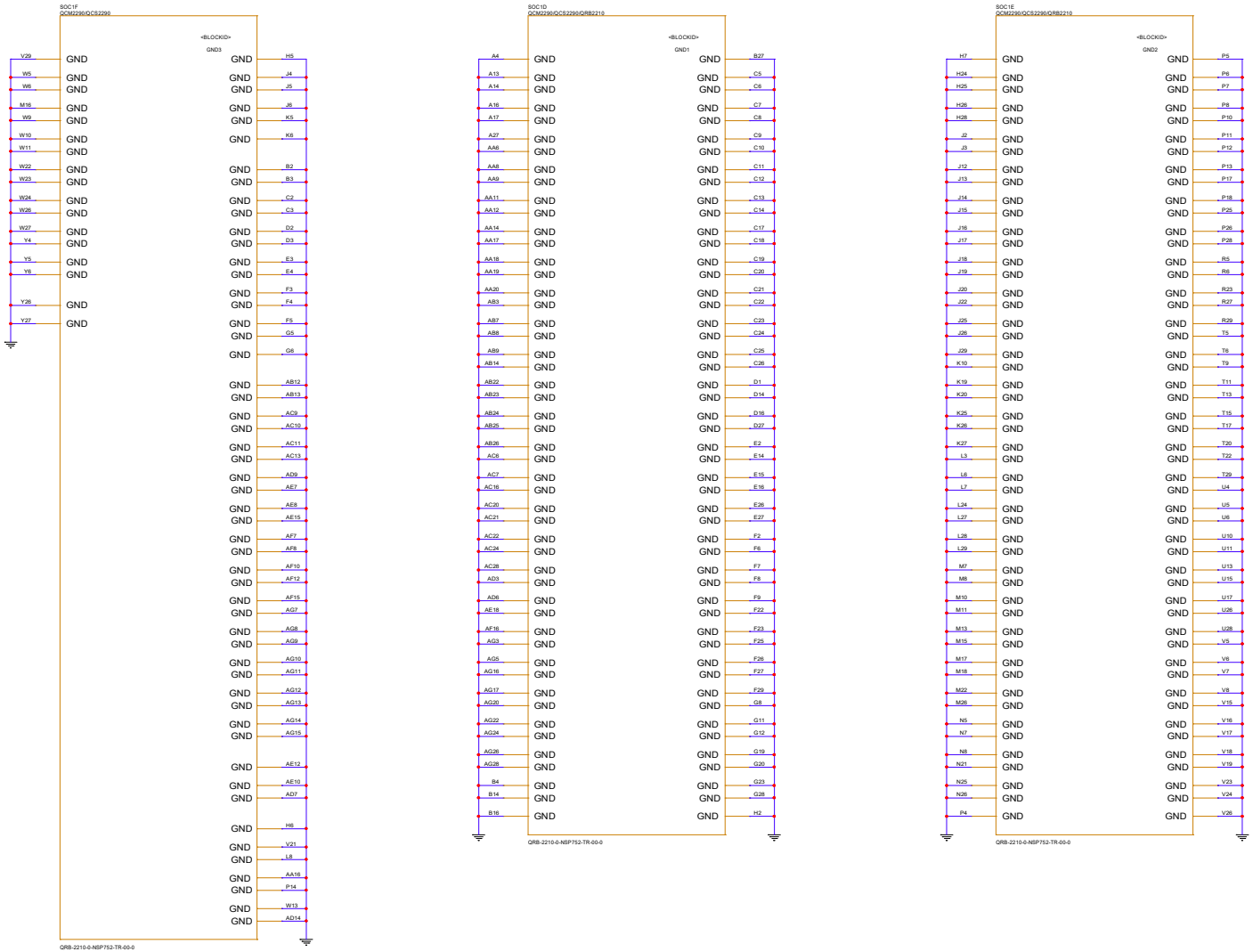

Reference Designs ARE PROVIDED "AS IS" AND "WITH ALL FAULTS". Arduino SA DISCLAIMS ALL OTHER WARRANTIES, EXPRESS OR IMPLIED, REGARDING PRODUCTS, INCLUDING BUT NOT LIMITED TO, ANY IMPLIED WARRANTIES OF MERCHANTABILITY OR FITNESS FOR A PARTICULAR PURPOSE. Arduino SA may make changes to specifications and product descriptions at any time, without notice. The Customer must not rely on the absence or characteristics of any features or instructions marked "reserved" or "undefined". Arduino SA reserves these for future definition and shall have no responsibility whatsoever for conflicts or incompatibilities arising from future changes to them. The product information on the Web Site or Materials is subject to change without notice. Do not finalize a design with this info. ARDUINO and other Arduino brands and logos are Trademarks of Arduino SA.
All Arduino SA Trademarks cannot be used without owner's formal permission.
This project's hardware is licensed under the Creative Commons Attribution-ShareAlike 4.0 International License. To view a copy of this license, visit https://creativecommons.org/licenses/by-sa/4.0/deed.en

Title: QRB2210-GND			
ID: ABX00162	Version:		
Date: 05/10/2023	Time: 17:00:00	Sheet 10 of 24	

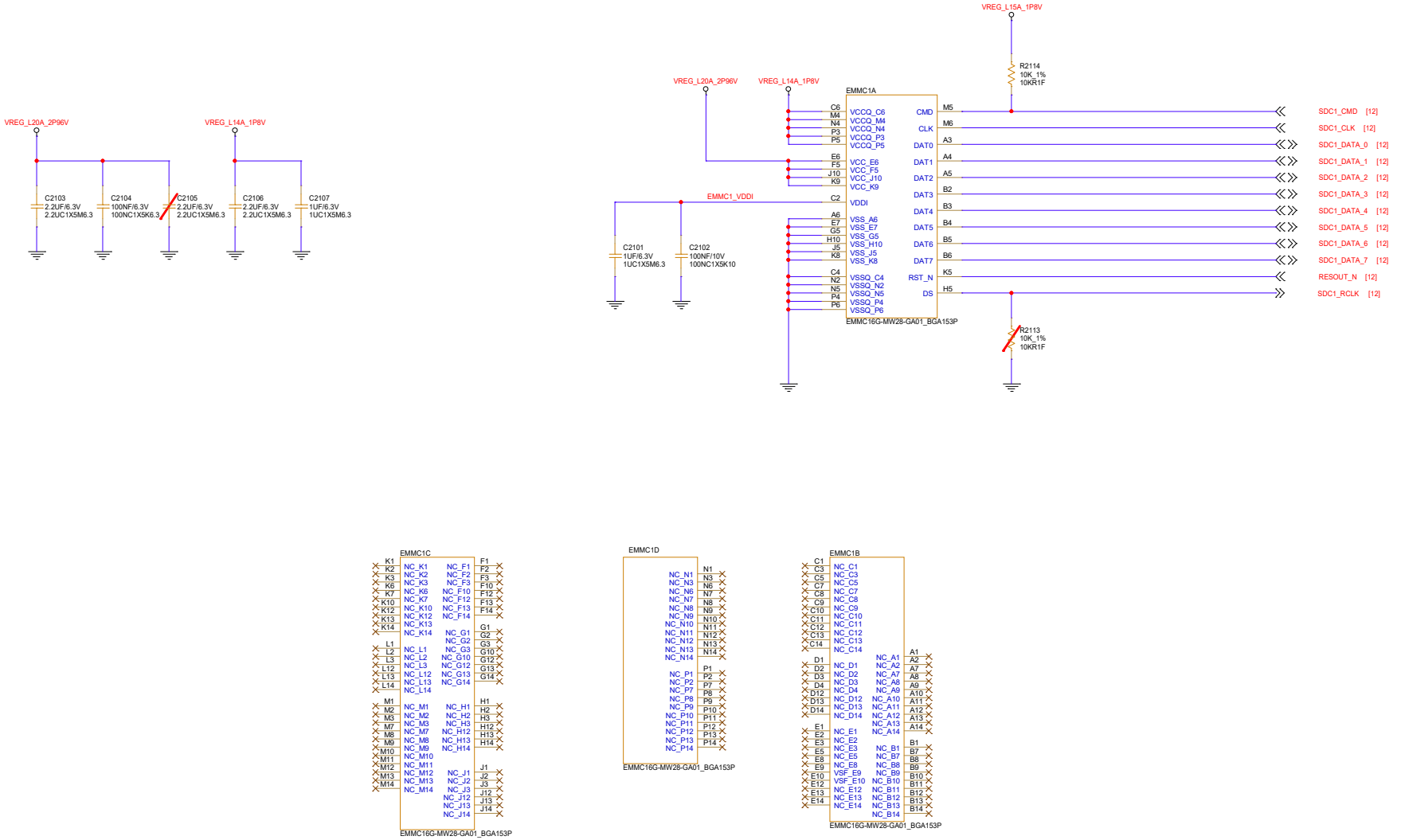

Reference Designs ARE PROVIDED "AS IS" AND "WITH ALL FAULTS". Arduino SA DISCLAIMS ALL OTHER WARRANTIES, EXPRESS OR IMPLIED, REGARDING PRODUCTS, INCLUDING BUT NOT LIMITED TO, ANY IMPLIED WARRANTIES OF MERCHANTABILITY OR FITNESS FOR A PARTICULAR PURPOSE. Arduino SA may make changes to specifications and product descriptions at any time, without notice. The Customer must not rely on the absence or characteristics of any features or instructions marked "reserved" or "undefined". Arduino SA reserves these for future definition and shall have no responsibility whatsoever for conflicts or incompatibilities arising from future changes to them. The product information on the Web Site or Materials is subject to change without notice. Do not finalize a design with this info. ARDUINO and other Arduino brands and logos are Trademarks of Arduino SA. All Arduino SA Trademarks cannot be used without owner's formal permission.
This project's hardware is licensed under the Creative Commons Attribution-ShareAlike 4.0 International License. To view a copy of this license, visit https://creativecommons.org/licenses/by-sa/4.0/deed.en

Title: eMMC		
ID: ABX00162	Version:	
Date: 01/10/2025	Time: 13:00:00	Sheet 17 of 24

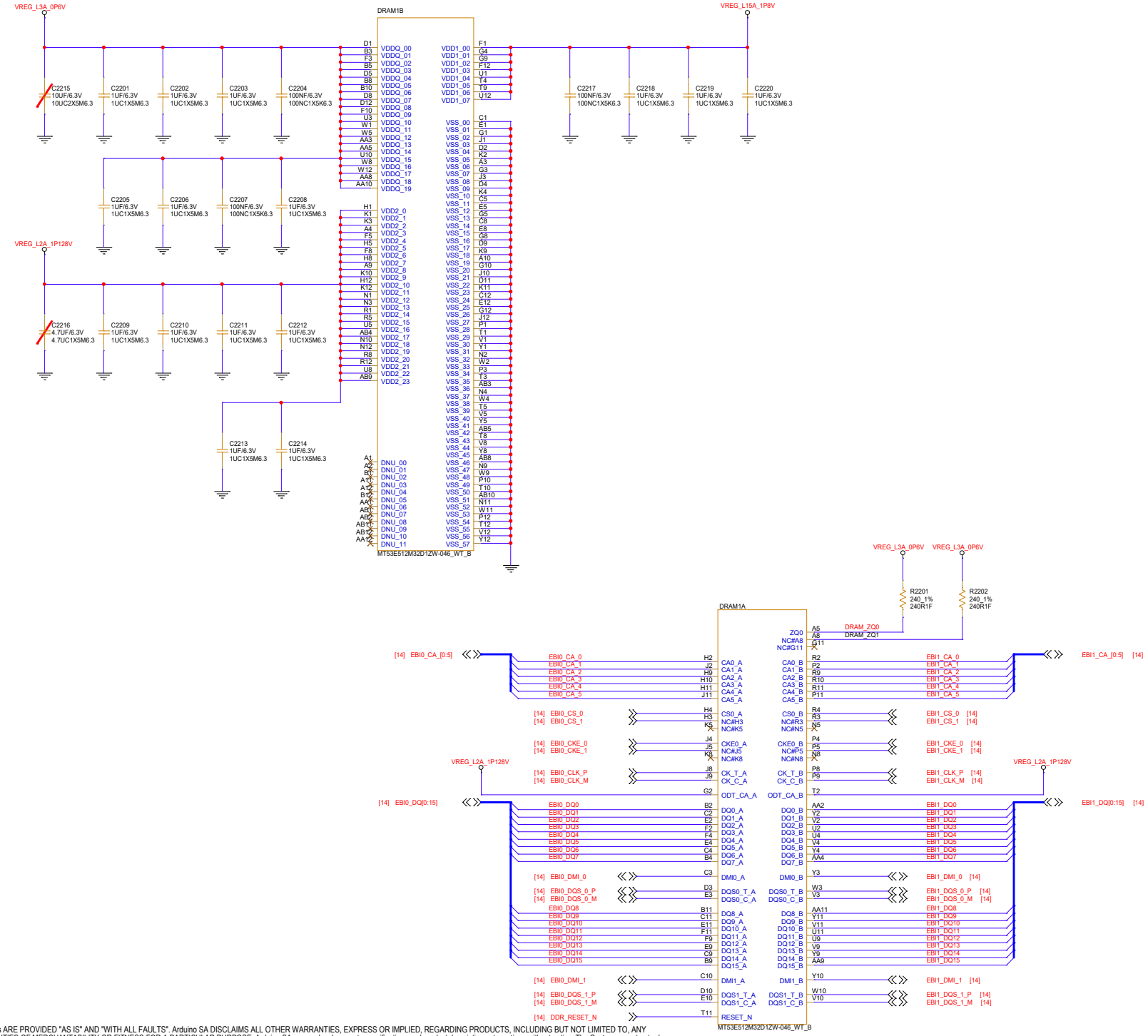

Reference Designs ARE PROVIDED "AS IS" AND "WITH ALL FAULTS". Arduino SA DISCLAIMS ALL OTHER WARRANTIES, EXPRESS OR IMPLIED, REGARDING PRODUCTS, INCLUDING BUT NOT LIMITED TO, ANY IMPLIED WARRANTIES OF MERCHANTABILITY OR FITNESS FOR A PARTICULAR PURPOSE. Arduino SA may make changes to specifications and product descriptions at any time, without notice. The Customer must not rely on the absence or characteristics of any features or instructions marked "reserved" or "undefined". Arduino SA reserves these for future definition and shall have no responsibility whatsoever for conflicts or incompatibilities arising from future changes to them. The product information on the Web Site or Materials is subject to change without notice. Do not finalize a design with this info. ARDUINO and other Arduino brands and logos are Trademarks of Arduino SA. All Arduino SA Trademarks cannot be used without owner's formal permission.
This project's hardware is licensed under the Creative Commons Attribution-ShareAlike 4.0 International License. To view a copy of this license, visit https://creativecommons.org/licenses/by-sa/4.0/deed.en

Title: LPDDR4X		
ID: ABX00162	Version:	
Date: 01/10/2025 Time: 13:00:00	Sheet 18 of 24	

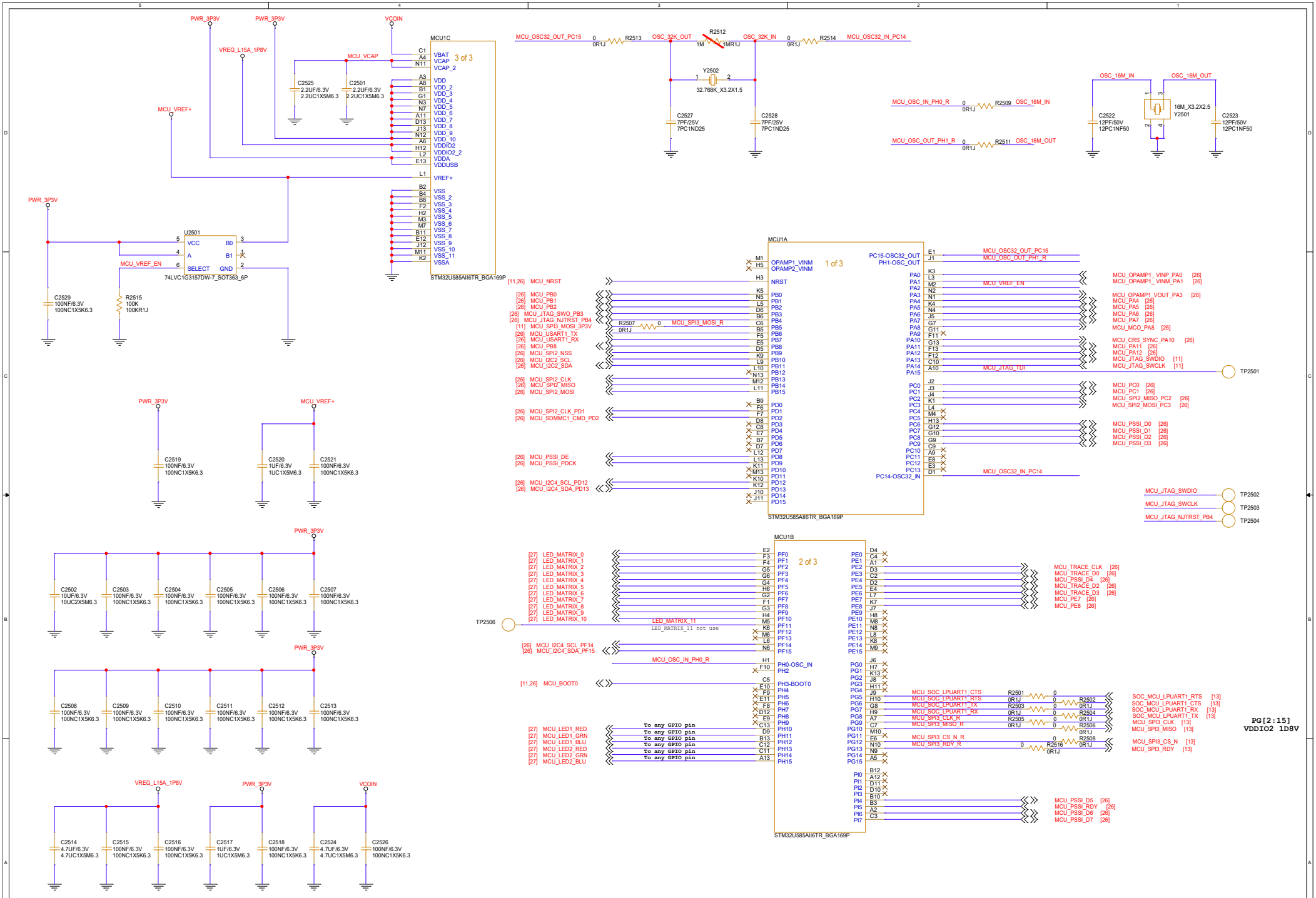

Reference Designs ARE PROVIDED "AS IS" AND "WITH ALL FAULTS". Arduino SA DISCLAIMS ALL OTHER WARRANTIES, EXPRESS OR IMPLIED, REGARDING PRODUCTS, INCLUDING BUT NOT LIMITED TO, ANY IMPLIED WARRANTIES OF MERCHANTABILITY OR FITNESS FOR A PARTICULAR PURPOSE. Arduino SA may make changes to specifications and product descriptions at any time, without notice. The Customer must not rely on the absence or characteristics of any features or instructions marked "reserved" or "undefined". Arduino SA reserves these for future definition and shall have no responsibility whatsoever for conflicts or incompatibilities arising from future changes to them. The product information on the Web Site or Materials is subject to change without notice. Do not finalize a design with this info. ARDUINO and other Arduino brands and logos are Trademarks of Arduino SA.
All Arduino SA Trademarks cannot be used without owner's formal permission.
This project's hardware is licensed under the Creative Commons Attribution-ShareAlike 4.0 International License. To view a copy of this license, visit https://creativecommons.org/licenses/by-sa/4.0/deed.en

Title: MCU	
ID: ABX00162	Version:
Date: 01/10/2025	Time: 13:00:00
Sheet 19 of 24	

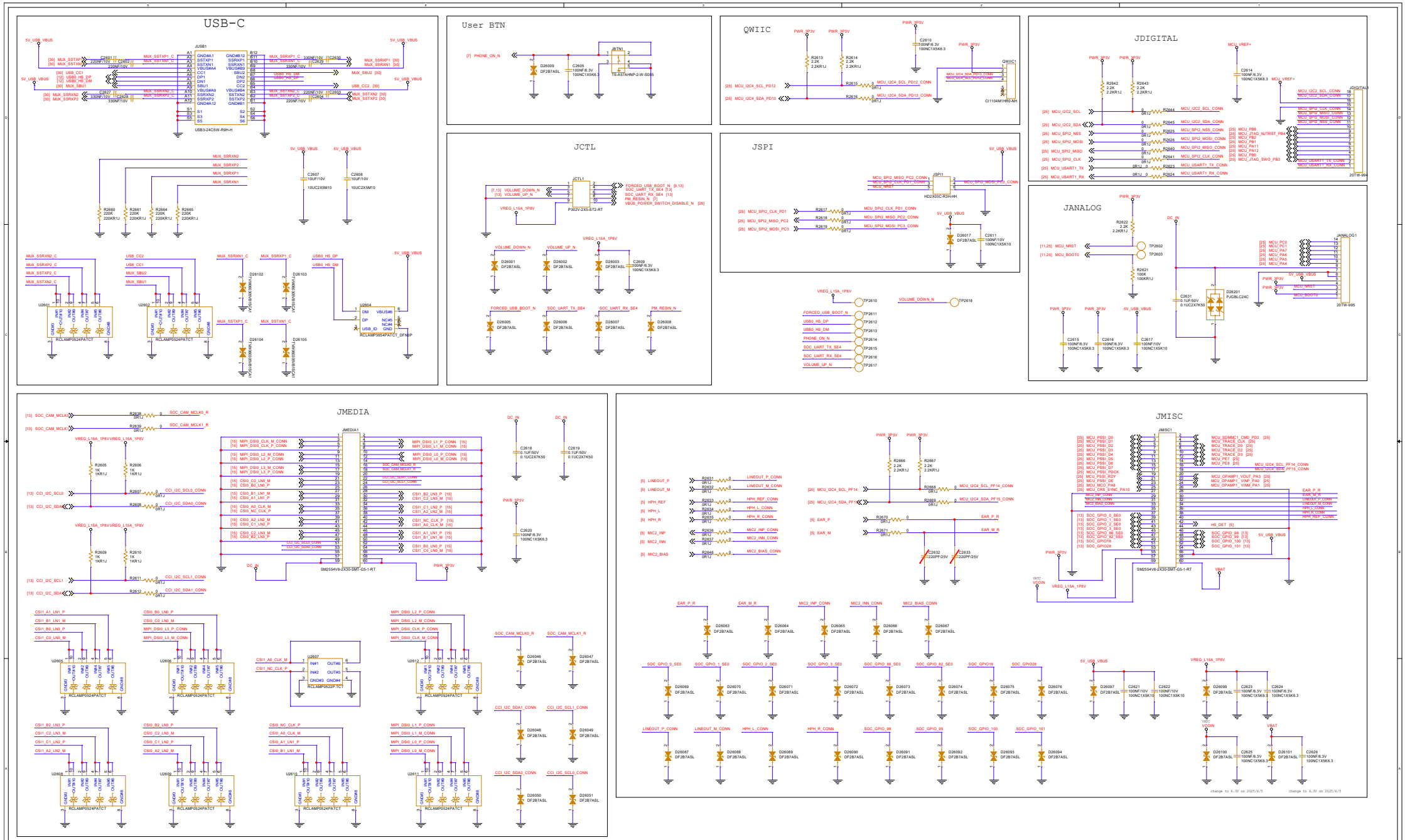

Title: IO		
ID: ABX00162	Version:	
Date: 01/10/2025 Time: 12:00:00	Sheet 30 of 24	

Reference Designs ARE PROVIDED "AS IS" AND "WITH ALL FAULTS". Arduino SA DISCLAIMS ALL OTHER WARRANTIES, EXPRESS OR IMPLIED, REGARDING PRODUCTS, INCLUDING BUT NOT LIMITED TO, ANY IMPLIED WARRANTIES OF MERCHANTABILITY OR FITNESS FOR A PARTICULAR PURPOSE. Arduino SA may make changes to specifications and product descriptions at any time, without notice. The Customer must not rely on the absence or characteristics of any features or instructions marked "reserved" or "undefined". Arduino SA reserves these for future definition and shall have no responsibility whatsoever for conflicts or incompatibilities arising from future changes to them. The product information on the Web Site or Materials is subject to change without notice. Do not finalize a design with this info. ARDUINO and other Arduino brands and logos are Trademarks of Arduino SA.
All Arduino SA Trademarks cannot be used without owner's formal permission.
This project's hardware is licensed under the Creative Commons Attribution-ShareAlike 4.0 International License. To view a copy of this license, visit https://creativecommons.org/licenses/by-sa/4.0/deed.en

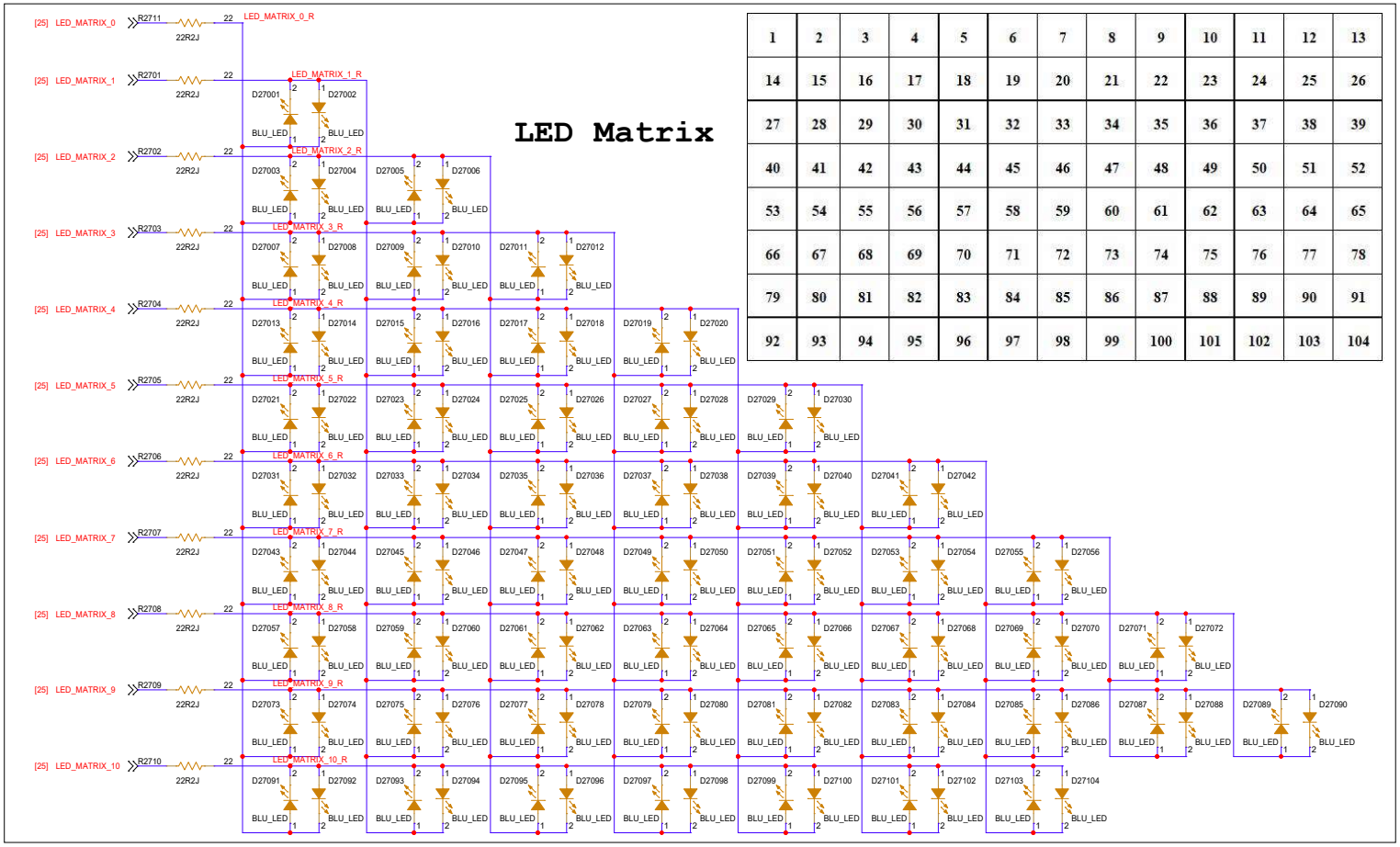

1	2	3	4	5	6	7	8	9	10	11	12	13
14	15	16	17	18	19	20	21	22	23	24	25	26
27	28	29	30	31	32	33	34	35	36	37	38	39
40	41	42	43	44	45	46	47	48	49	50	51	52
53	54	55	56	57	58	59	60	61	62	63	64	65
66	67	68	69	70	71	72	73	74	75	76	77	78
79	80	81	82	83	84	85	86	87	88	89	90	91
92	93	94	95	96	97	98	99	100	101	102	103	104

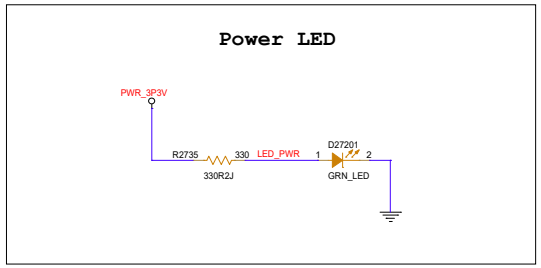

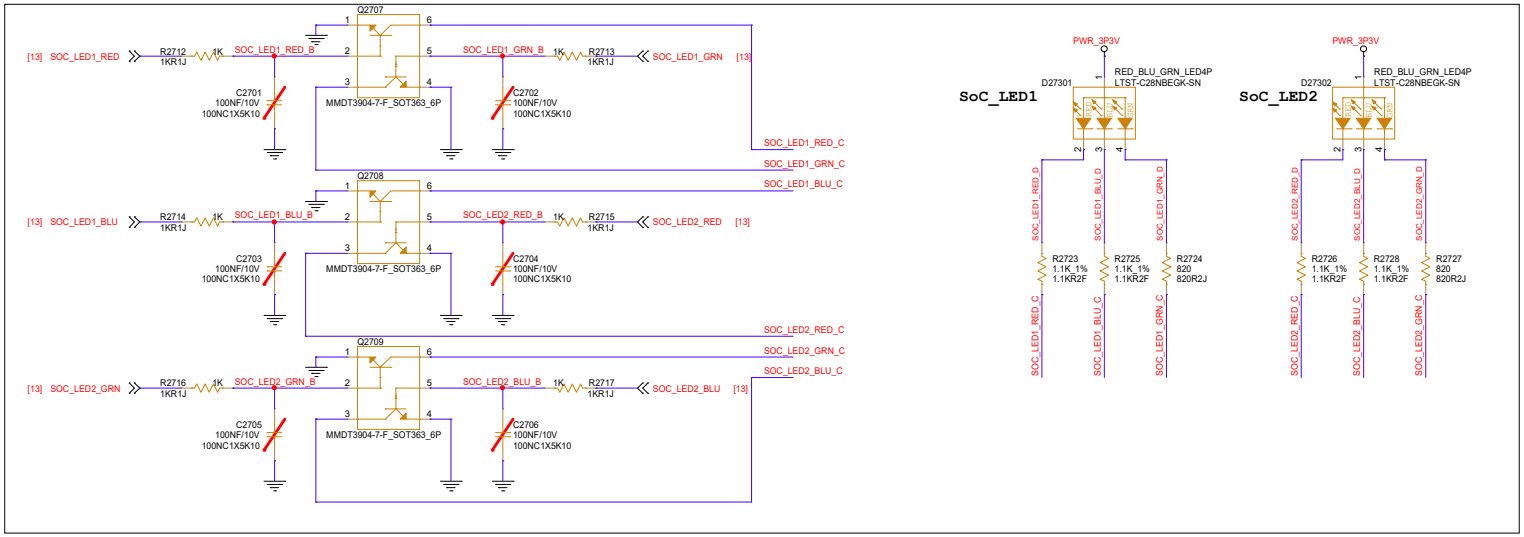

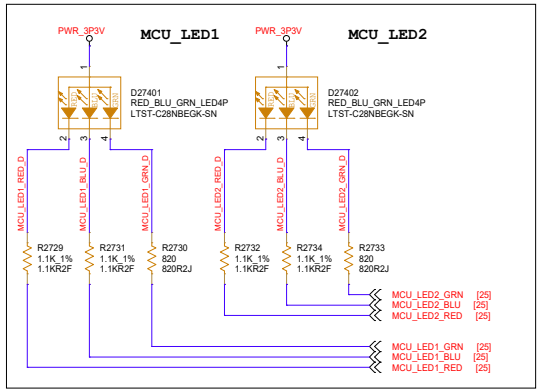

Reference Designs ARE PROVIDED "AS IS" AND "WITH ALL FAULTS". Arduino SA DISCLAIMS ALL OTHER WARRANTIES, EXPRESS OR IMPLIED, REGARDING PRODUCTS, INCLUDING BUT NOT LIMITED TO, ANY IMPLIED WARRANTIES OF MERCHANTABILITY OR FITNESS FOR A PARTICULAR PURPOSE. Arduino SA may make changes to specifications and product descriptions at any time, without notice. The Customer must not rely on the absence or characteristics of any features or instructions marked "reserved" or "undefined". Arduino SA reserves these for future definition and shall have no responsibility whatsoever for conflicts or incompatibilities arising from future changes to them. The product information on the Web Site or Materials is subject to change without notice. Do not finalize a design with this info. ARDUINO and other Arduino brands and logos are Trademarks of Arduino SA. All Arduino SA Trademarks cannot be used without owner's formal permission.
This project's hardware is licensed under the Creative Commons Attribution-ShareAlike 4.0 International License. To view a copy of this license, visit https://creativecommons.org/licenses/by-sa/4.0/deed.en

Title: LED
ID: ABX00162
Version:
Date: 01/10/2025 Time: 13:00:00
Sheet 21 of 24

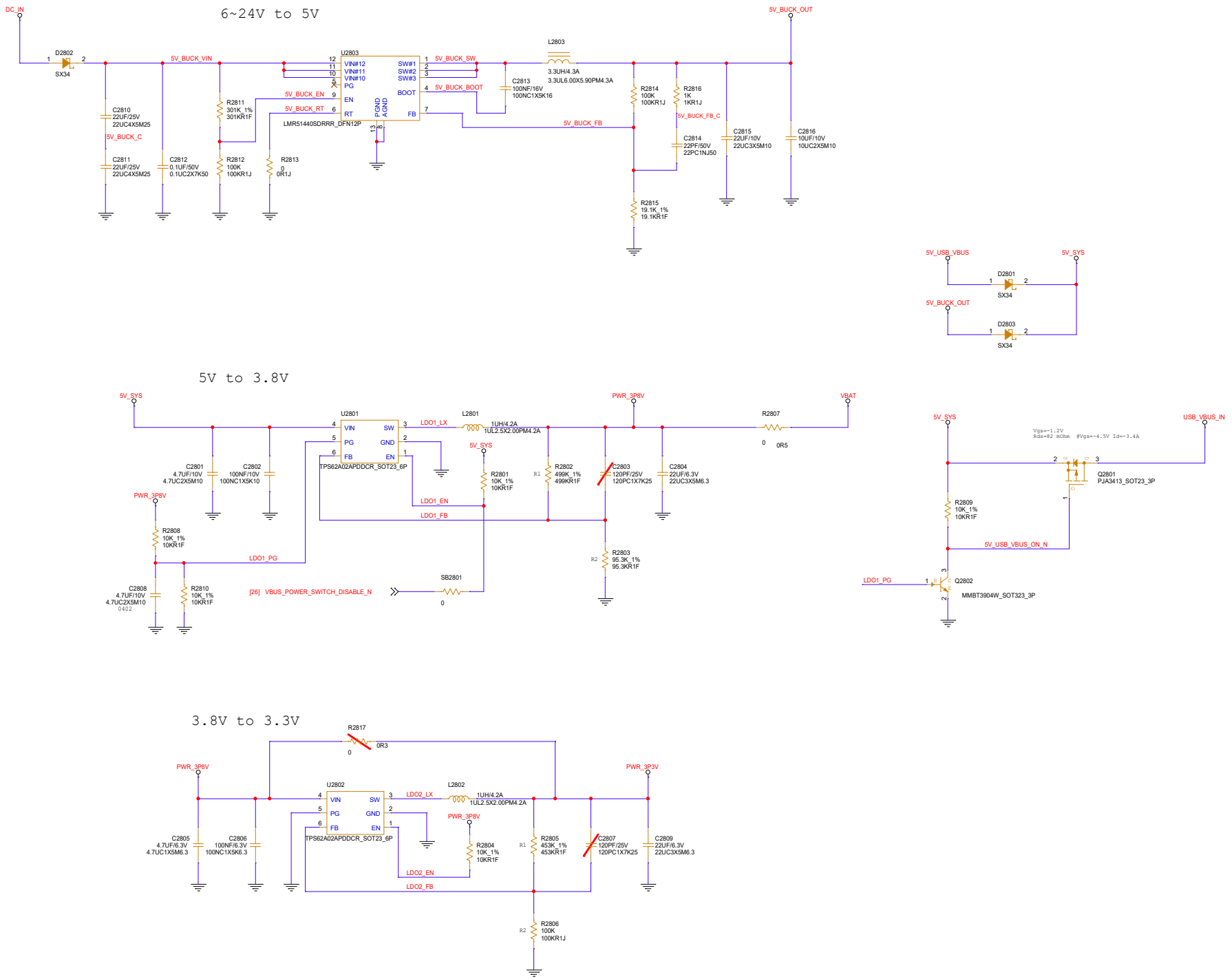

Reference Designs ARE PROVIDED "AS IS" AND "WITH ALL FAULTS". Arduino SA DISCLAIMS ALL OTHER WARRANTIES, EXPRESS OR IMPLIED, REGARDING PRODUCTS, INCLUDING BUT NOT LIMITED TO, ANY IMPLIED WARRANTIES OF MERCHANTABILITY OR FITNESS FOR A PARTICULAR PURPOSE. Arduino SA may make changes to specifications and product descriptions at any time, without notice. The Customer must not rely on the absence or characteristics of any features or instructions marked "reserved" or "undefined". Arduino SA reserves these for future definition and shall have no responsibility whatsoever for conflicts or incompatibilities arising from future changes to them. The product information on the Web Site or Materials is subject to change without notice. Do not finalize a design with this info. ARDUINO and other Arduino brands and logos are Trademarks of Arduino SA. All Arduino SA Trademarks cannot be used without owner's formal permission.
This project's hardware is licensed under the Creative Commons Attribution-ShareAlike 4.0 International License. To view a copy of this license, visit https://creativecommons.org/licenses/by-sa/4.0/deed.en

Title: DC / DC		
ID: ABX00162	Version:	
Date: 01/10/2025	Time: 13:00:00	Sheet 22 of 24

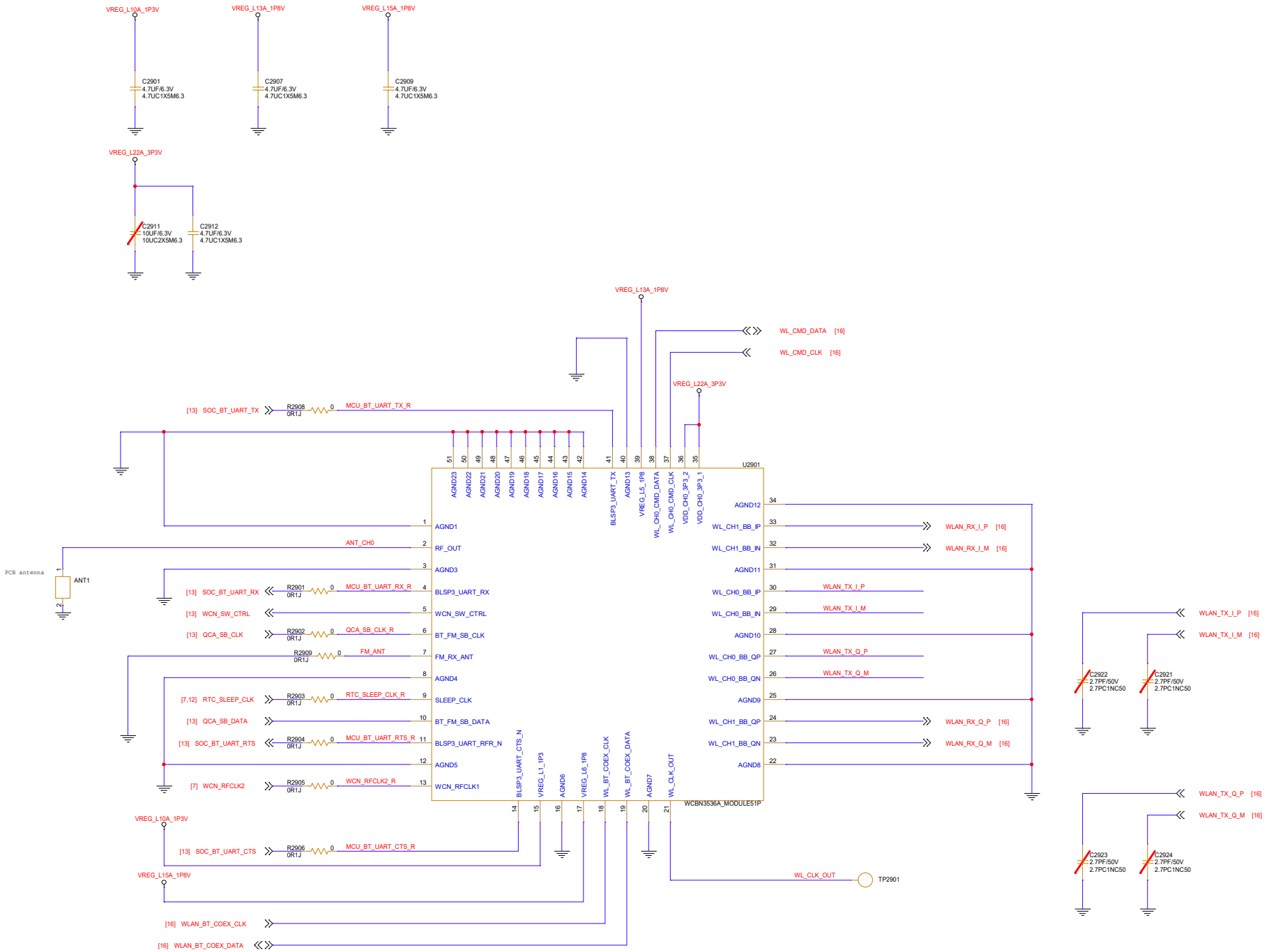

Reference Designs ARE PROVIDED "AS IS" AND "WITH ALL FAULTS". Arduino SA DISCLAIMS ALL OTHER WARRANTIES, EXPRESS OR IMPLIED, REGARDING PRODUCTS, INCLUDING BUT NOT LIMITED TO, ANY IMPLIED WARRANTIES OF MERCHANTABILITY OR FITNESS FOR A PARTICULAR PURPOSE. Arduino SA may make changes to specifications and product descriptions at any time, without notice. The Customer must not rely on the absence or characteristics of any features or instructions marked "reserved" or "undefined". Arduino SA reserves these for future definition and shall have no responsibility whatsoever for conflicts or incompatibilities arising from future changes to them. The product information on the Web Site or Materials is subject to change without notice. Do not finalize a design with this info. ARDUINO and other Arduino brands and logos are Trademarks of Arduino SA. All Arduino SA Trademarks cannot be used without owner's formal permission.
This project's hardware is licensed under the Creative Commons Attribution-ShareAlike 4.0 International License. To view a copy of this license, visit https://creativecommons.org/licenses/by-sa/4.0/deed.en

Title: RF & WiFi Module		
ID: ABX00162	Version:	
Date: 01/10/2025 Time: 13:00:00	Sheet 23 of 24	

CC BY SA

ARDUINO

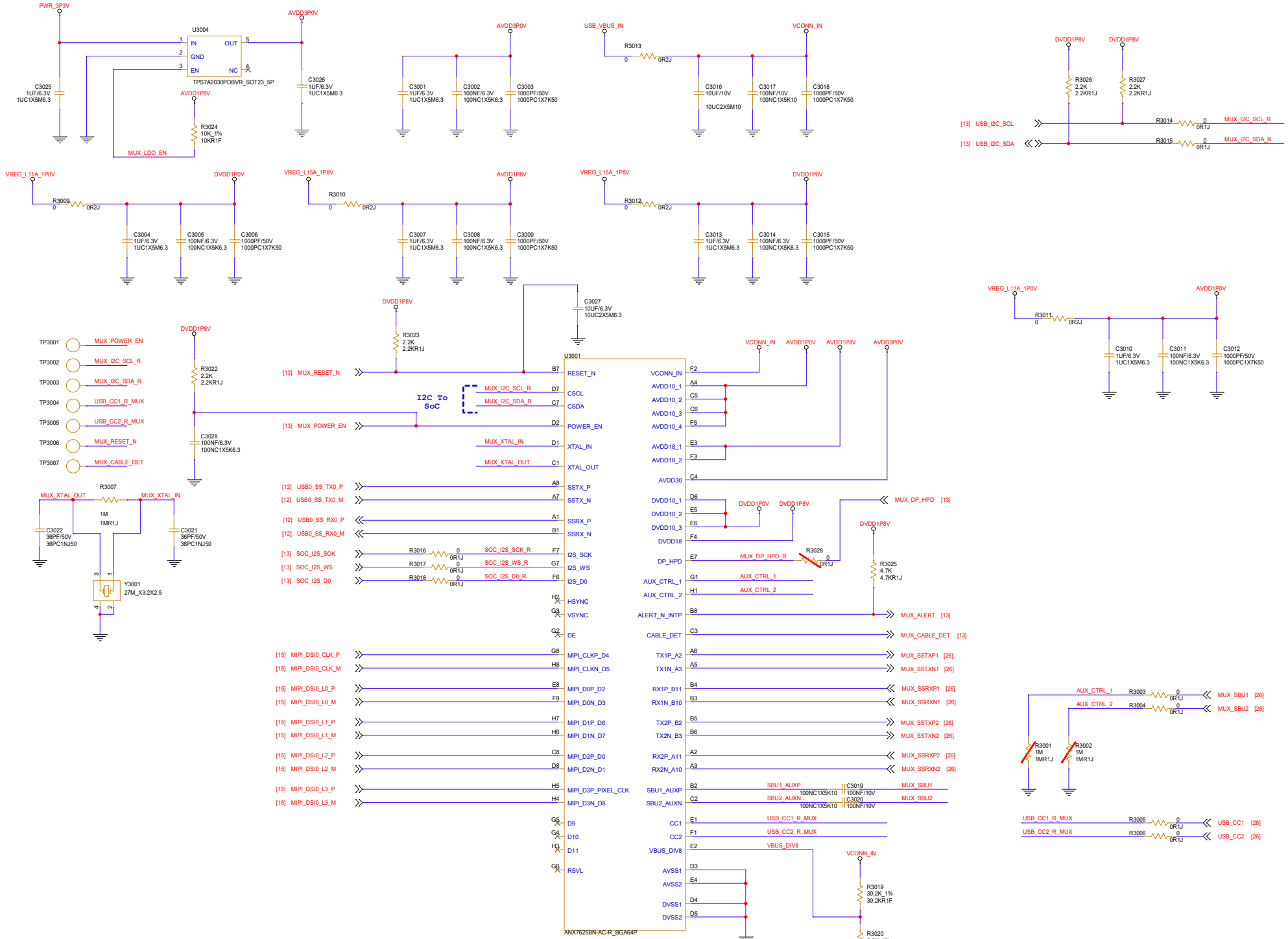

Reference Designs ARE PROVIDED "AS IS" AND "WITH ALL FAULTS". Arduino SA DISCLAIMS ALL OTHER WARRANTIES, EXPRESS OR IMPLIED, REGARDING PRODUCTS, INCLUDING BUT NOT LIMITED TO, ANY IMPLIED WARRANTIES OF MERCHANTABILITY OR FITNESS FOR A PARTICULAR PURPOSE. Arduino SA may make changes to specifications and product descriptions at any time, without notice. The Customer must not rely on the absence or characteristics of any features or instructions marked "reserved" or "undefined". Arduino SA reserves these for future definition and shall have no responsibility whatsoever for conflicts or incompatibilities arising from future changes to them. The product information on the Web Site or Materials is subject to change without notice. Do not finalize a design with this info. ARDUINO and other Arduino brands and logos are Trademarks of Arduino SA. All Arduino SA Trademarks cannot be used without owner's formal permission.
This project's hardware is licensed under the Creative Commons Attribution-ShareAlike 4.0 International License. To view a copy of this license, visit https://creativecommons.org/licenses/by-sa/4.0/deed.en

Title: ANX7625		
ID: ABX00162	Version:	
Date: 01/10/2025	Time: 13:00:00	Sheet 24 of 24

CC BY SA

ARDUINO

This project's hardware is licensed under the Creative Commons Attribution-ShareAlike 4.0 International License. To view a copy of this license, visit https://creativecommons.org/licenses/by-sa/4.0/deed.en