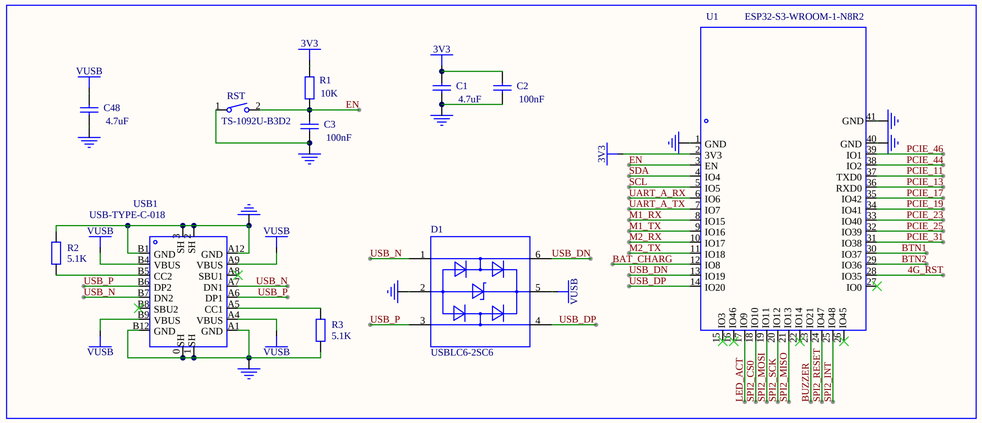

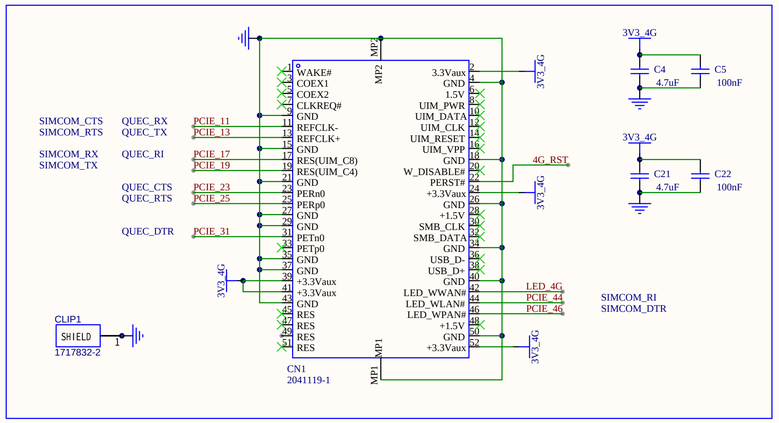

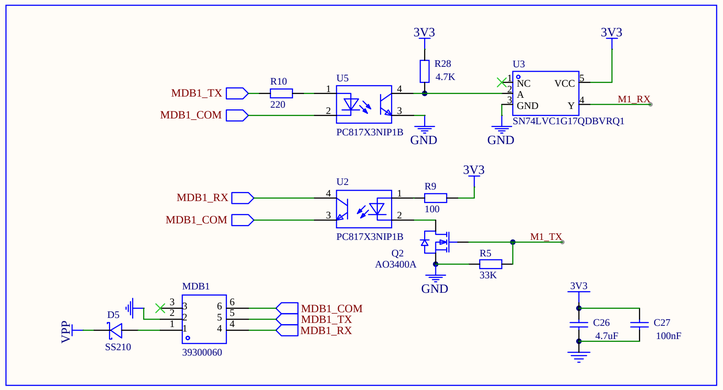

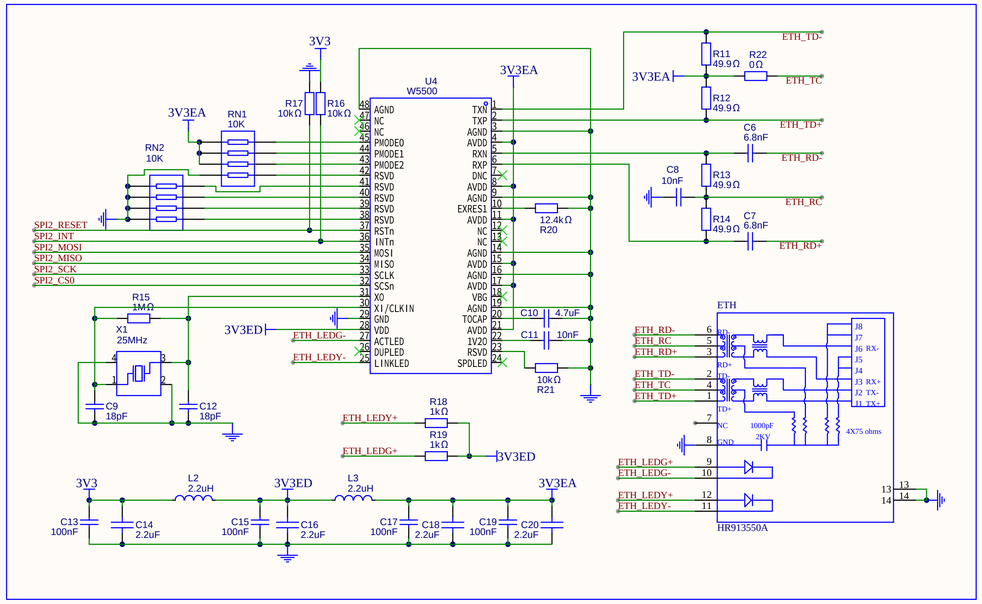

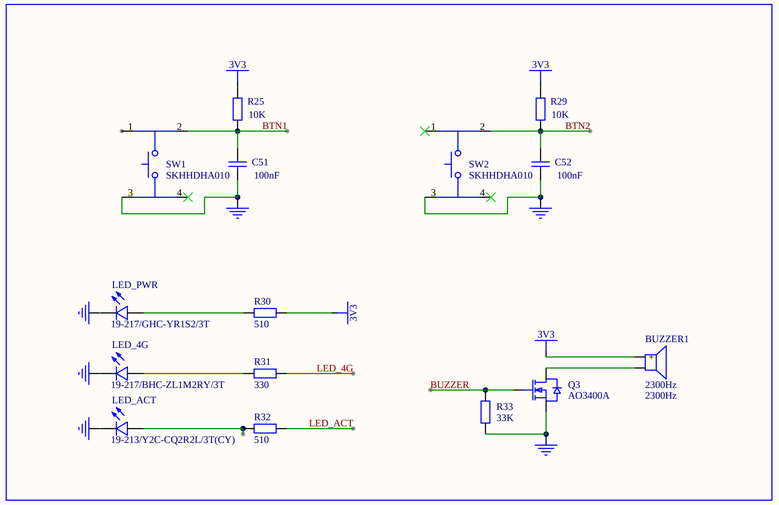

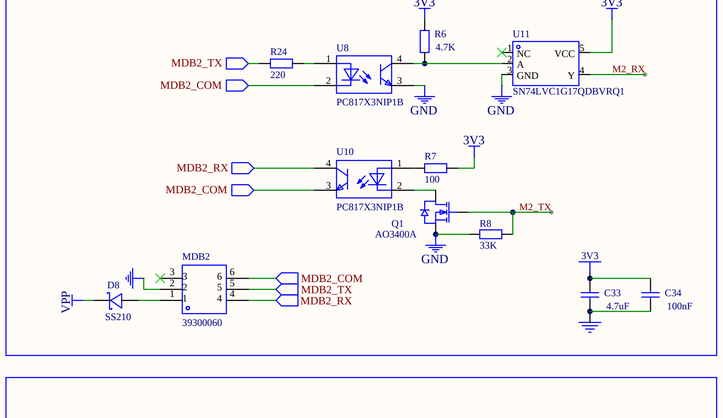

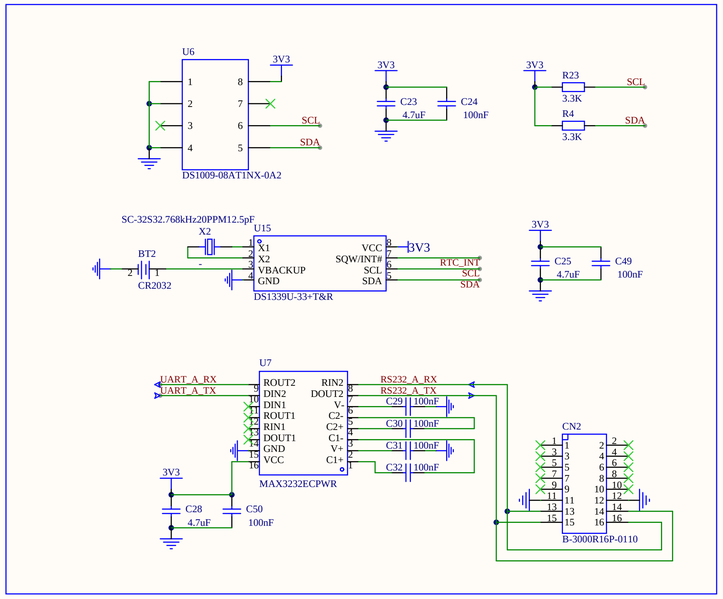

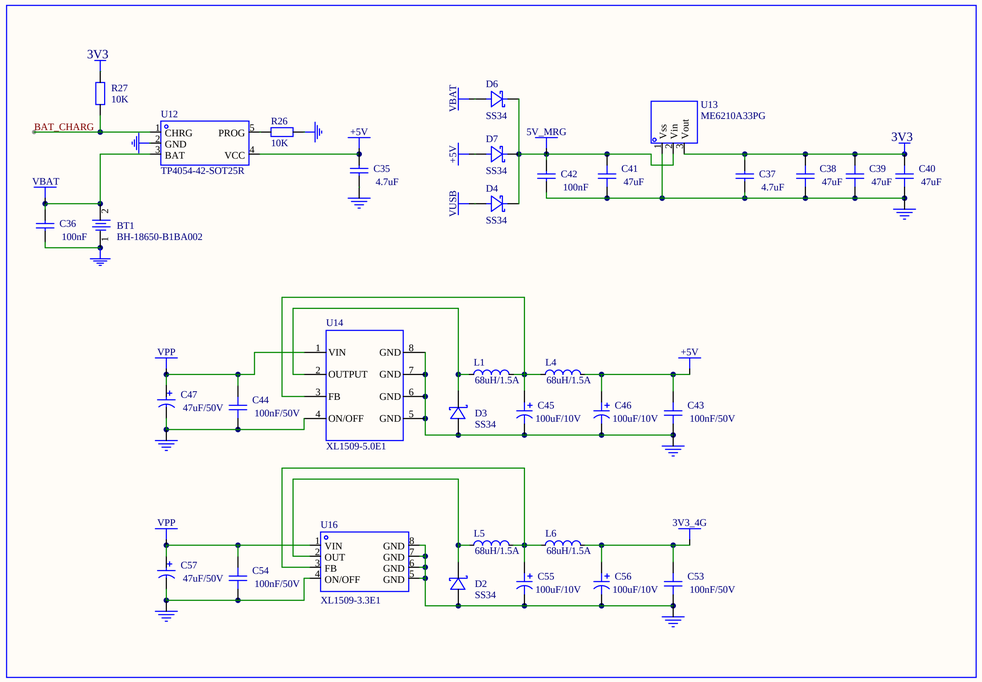

Schematic	Schematic1	Update Date	2023-03-22
		Create Date	2023-03-17
Page	P1	Part Number	JLCPCB-001
Drawed	DumTux	Easymeal IoT	
Reviewed	PCBCrew		
		VER	SIZE	PAGE 1 OF 1
EasyEDA		V0.1	A3	PCBCrew