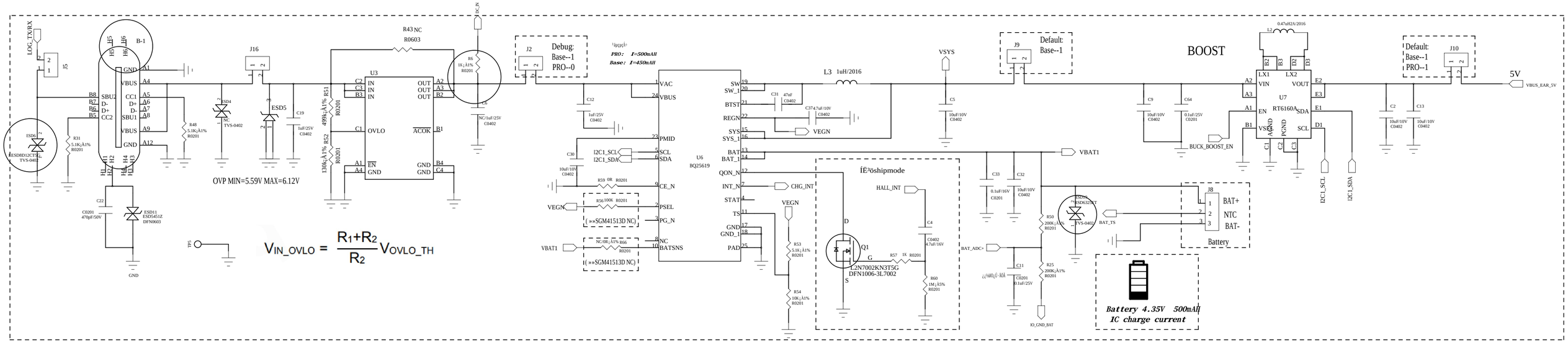

MAIN PCB BOARD:

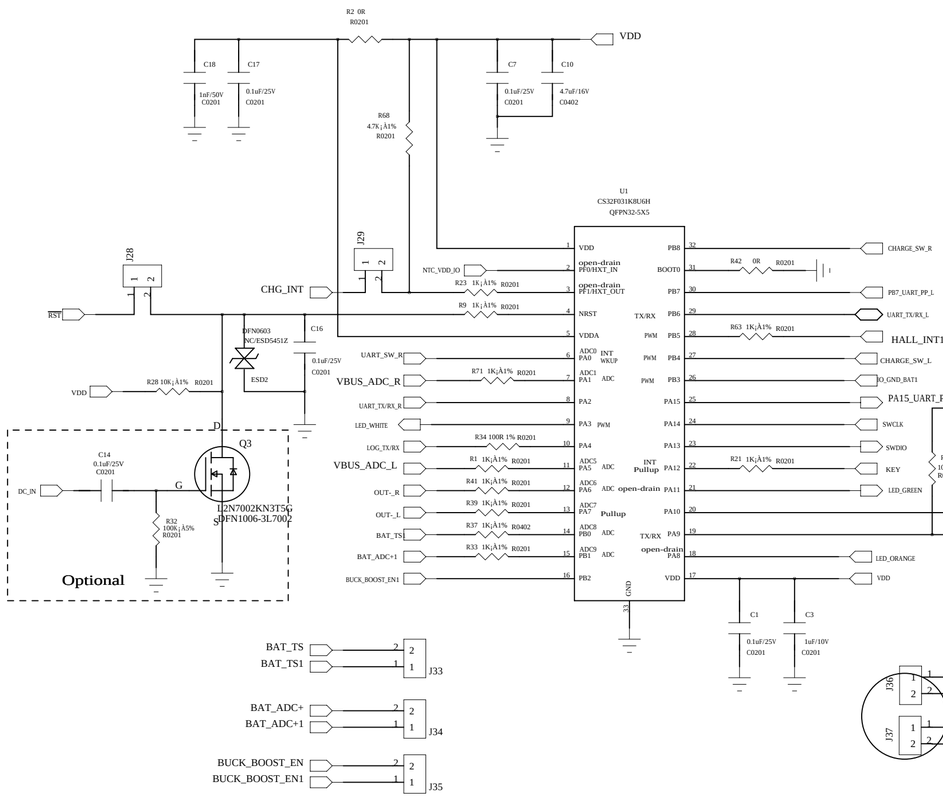

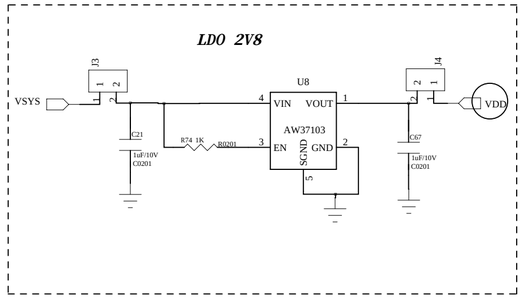

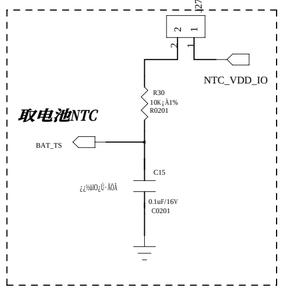

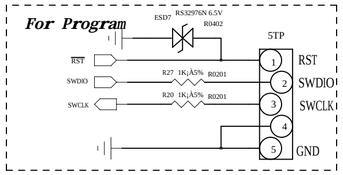

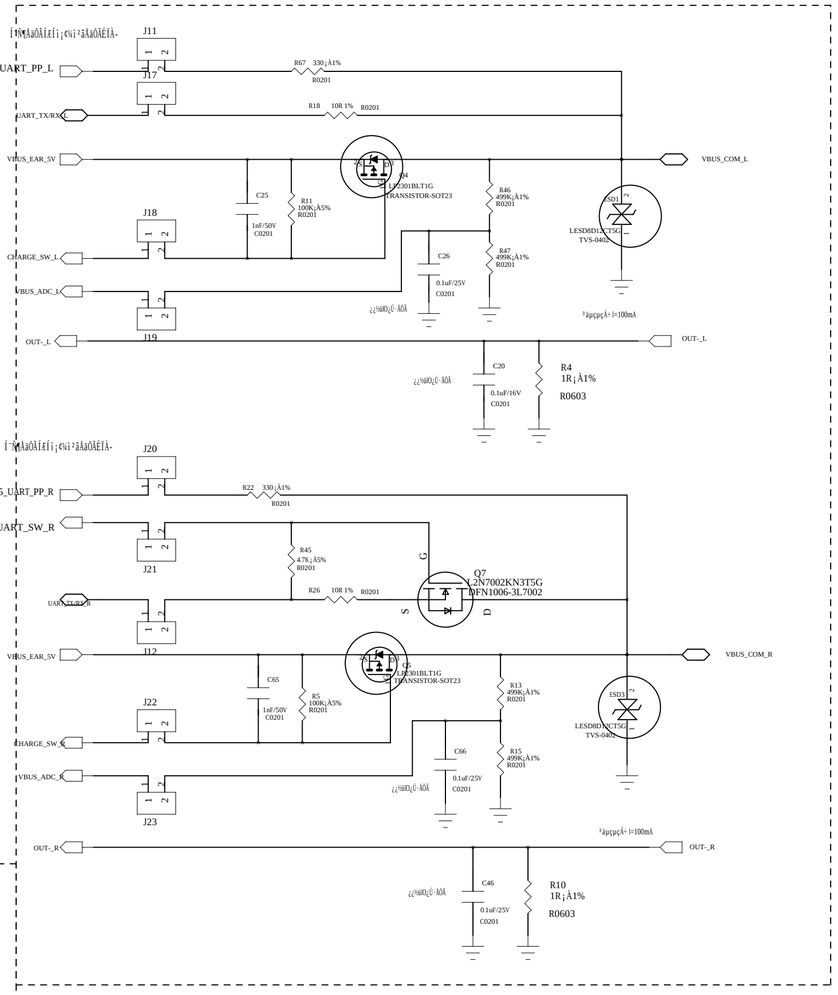

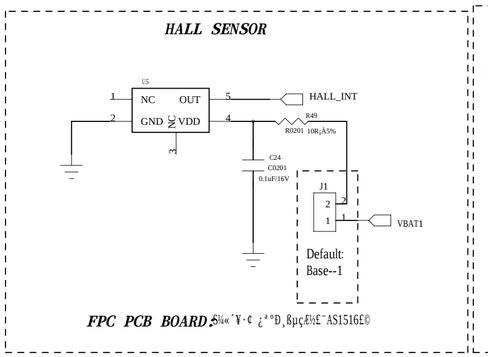

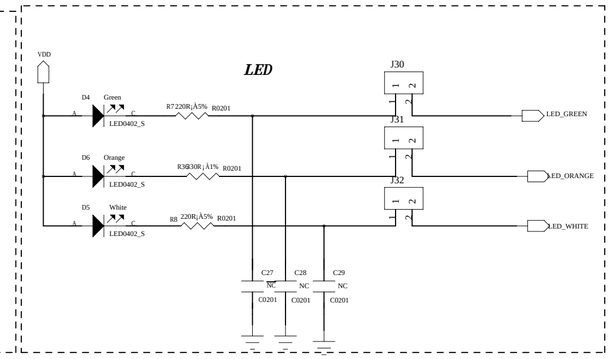

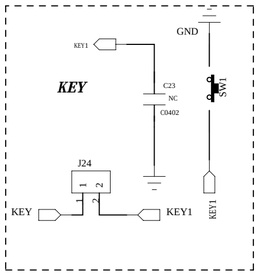

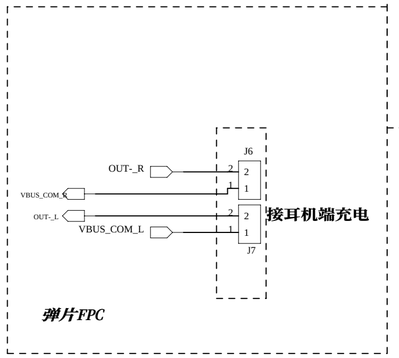

BAD_MARK1

M1

M2

COMPANY:	
Project Name:	
DRAWN:	
SHEET:	TITLE: chargingcase