RF Source

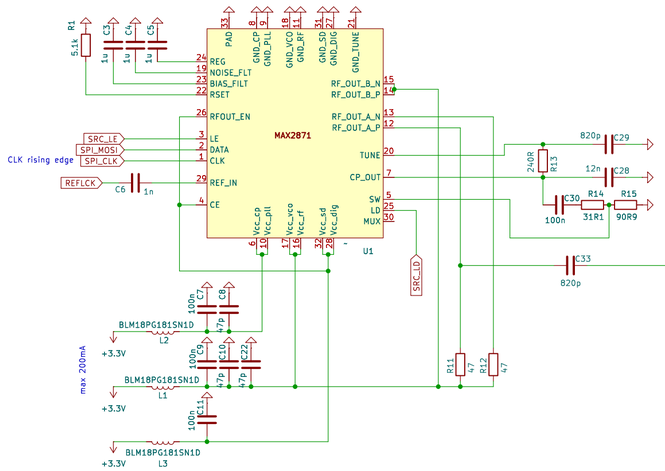

P1

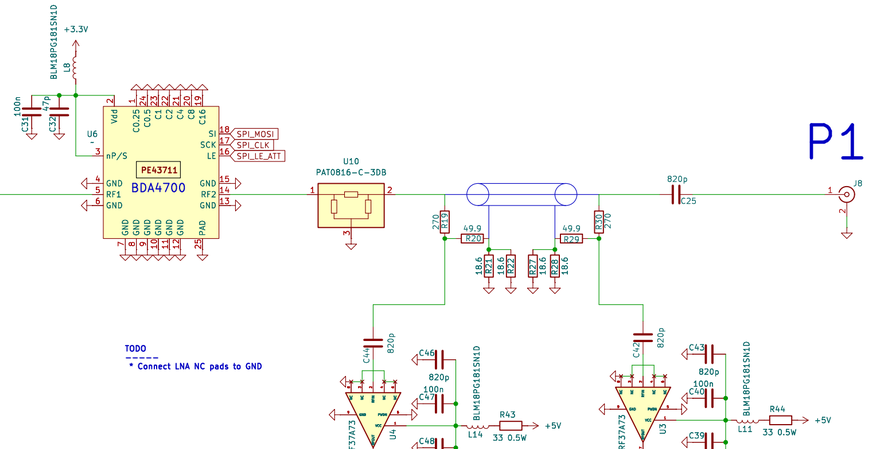

LO

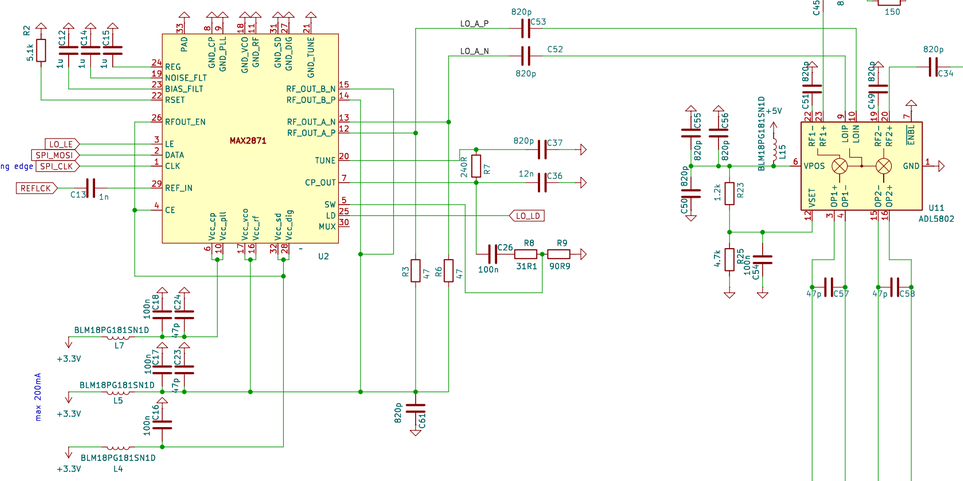

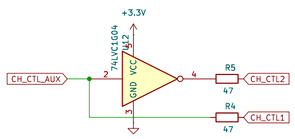

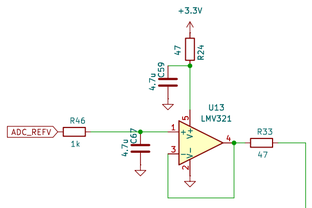

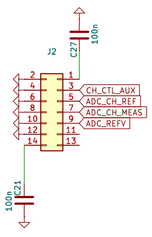

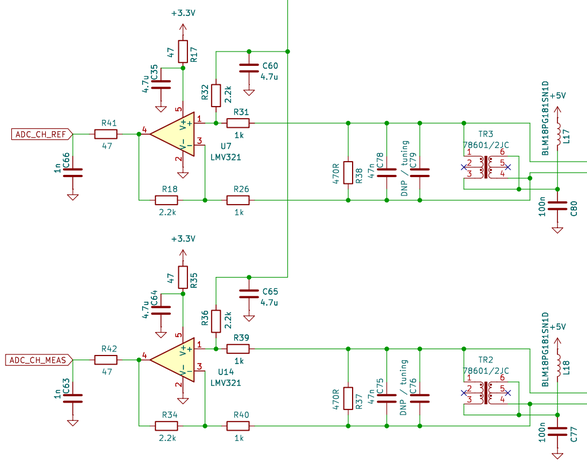

P2

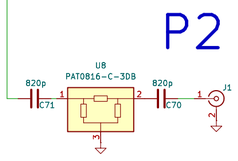

6 GHz VNA
Kun-Szabo
Sheet: /
File: VNA_switch.kicad_sch

Title: 6 GHz VNA

Size: A2	Date:	Rev:
KiCad E.D.A. 9.0.7		Id: 1/1