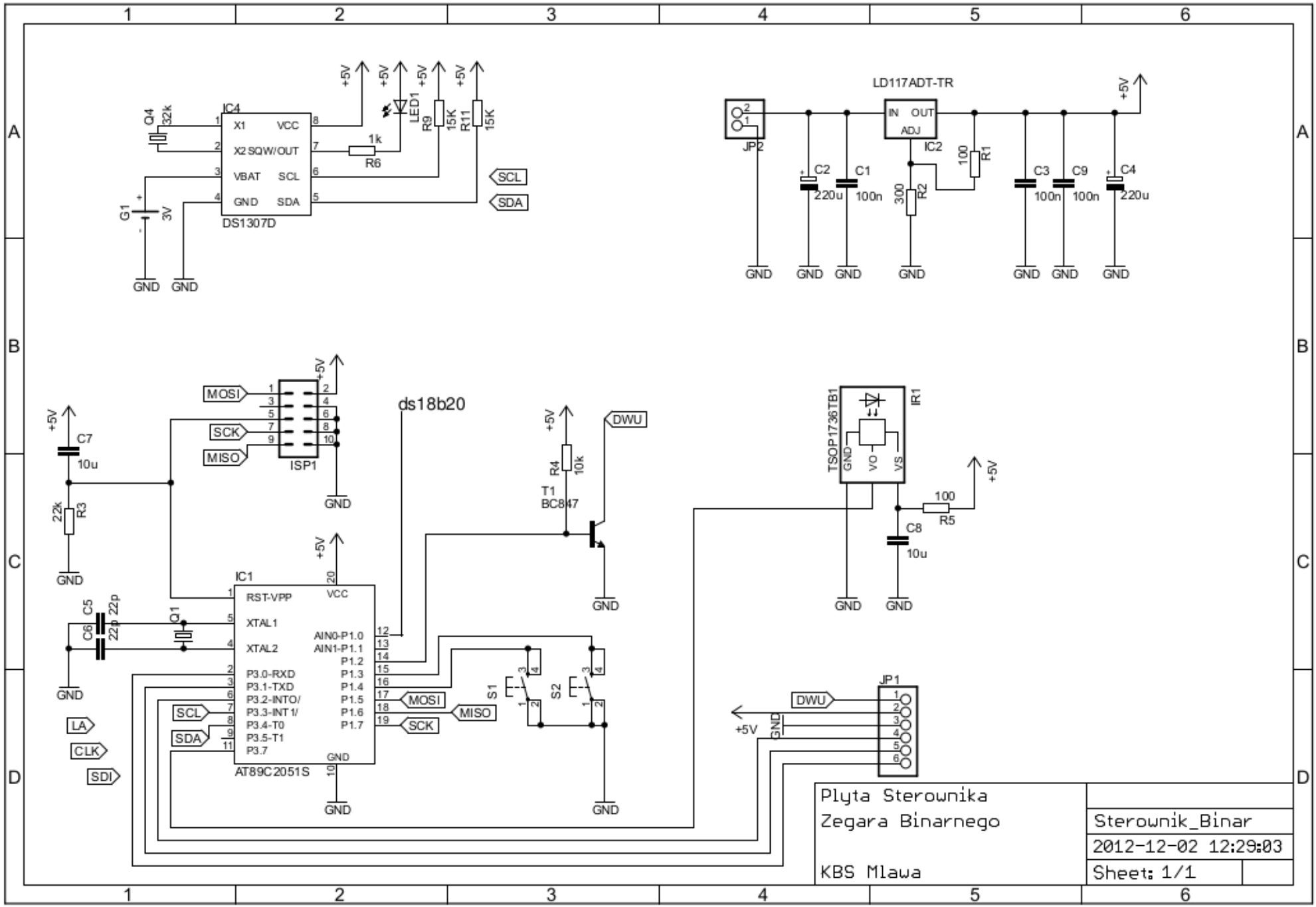
IC4
DS1307D
X1
X2
VBAT
GND
VCC
SQW/OUT
SCL
SDA
Q4
32k
G1
3V
R6
1k
LED1
R9
15K
R11
15K
+5V
SCL
SDA
LD117ADT-TR
IN
OUT
ADJ
IC2
JP2
C1
100n
C2
220u
R2
300
R1
100
C3
100n
C9
100n
C4
220u
ISP1
MOSI
SCK
MISO
C7
10u
R3
22k
ds18b20
IC1
AT89C2051S
RST-VPP
XTAL1
XTAL2
P3.0-RXD
P3.1-TXD
P3.2-INTO/
P3.3-INT1/
P3.4-T0
P3.5-T1
P3.7
AIN0-P1.0
AIN1-P1.1
P1.2
P1.3
P1.4
P1.5
P1.6
P1.7
C5
22p
C6
22p
Q1
LA
CLK
SDI
R4
10k
T1
BC847
DWU
S1
S2
TSOP1736TB1
IR1
R5
100
C8
10u
JP1
GND
Plyta Sterownika
Zegara Binarnego
KBS Mlawa
Sterownik_Binar
2012-12-02 12:29:03
Sheet: 1/1