NAME: _____ **BU ID:**_____

Midterm Exam – Monday, October 25th, 2021
EC327 Introduction to Software Engineering – Fall 2021

Total: 100 points

****MAKE SURE TO READ THE FOLLOWING BEFORE STARTING YOUR EXAM****

Exam Rules:

- **Save your work often during the exam**. You would not want to lose any work. Pay attention to where you are saving it as well!!

- You **CAN** use the following during the exam:

1. Linux programs (gcc, vi, gedit, gdb, emacs, etc.) on PHO305/307 machines,
2. The Forouzan course textbook (1st edition)
3. **Unlimited sheets** of PRINT material that you bring to the exam yourself (cannot share material)

- You **CANNOT** use hardware calculators, cell phones, laptops, or any other electronic devices.

- You have until **4:15pm (SHARP)** to finish and submit your exam. Please follow the submission instructions provided. Your submission will have a timestamp, so make sure to submit before the deadline. We reserve the right to NOT accept submission after the deadline.

- Do not spend too much time on any one question, you can always return to it later. Focus on getting code that compiles and is well documented in the event that you cannot get the correct functionality. **CODE MUST COMPILE OR ZERO CREDIT WILL BE GIVEN.**

- **Question 0** is an example so that you see how to submit. **IT IS AN EXAMPLE NOT A QUESTION.**

- Make sure to put all the code and all the files you need to submit in your exam directory, e.g., in *jbond_0007_002_midterm.* (See *Question 0* for more details about submission.)

- You are not allowed to access any other directories on the engineering grid (such as /ad/eng folders) or ssh to any machines. <u>All actions on the lab machines are being logged during the exam</u>.

GOOD LUCK!

Q0. Submission Procedure and Finding Your Way Around Linux.

*****This Question is An Example of How To Submit Your Work *****

a. Open a terminal window.

b. Create a folder named **<yourBUusername>_<last4digitsofBUID>_<machineNumber>_midterm**. For example, student *James Bond* with BU username *jbond* , BU ID U*12340007,* and machine number *002* (type **hostname** at Unix prompt to find computer name) should type:

```
mkdir jbond_0007_002_midterm
```

*** Make sure you put in your own name and number here, and not those of James Bond's!!!*

c. Change directory to your midterm directory:

```
cd jbond_0007_002_midterm
```

d. Create `test.cpp` file in your directory, and write the following code:

```
#include <iostream>
using namespace std;
int main()
{
  cout<< "TEST EC327 MIDTERM" << endl;
  return 0;
}
```

e. Zip your directory and submit via the following steps:

```
cd ..
ls
```

*** You should see your jbond_0007_midterm directory listed now.*

```
zip -r jbond_0007_002_midterm.zip ./jbond_0007_002_midterm/*
```

*** Make sure to replace James Bond's folder name with your folder name.*

f. Check that the zip file exists and contains all of the files:

```
ls
```

*** You should see jbond_0007_002_midterm.zip*

```
less jbond_0007_002_midterm.zip
```

*** This will list all the files in the zip. Make sure it contains all your files. ('q' to quit "less" program)*

g. Submit your solution:

Submit your solution by uploading it to the **Midterm Exam Portal on Blackboard**. On the EC327 page, go to "Content >> Exams >> Midterm >> Midterm Exam Submission." You will simply click "Browse My Computer" to select your zip file and then click "Open". Finally, click the green "Submit" to complete your submission.

You are allowed to submit your solutions as many times as you want; however, only the last submission will be graded. For each subsequent submission, please include a revision number in the filename so that we will know which submission is the latest (for example, jbond_0007_002_midterm_rev3.zip, etc.).

Make sure the file size as reported by the submission system matches your expectations!
Before you leave the exam, be sure to check with a proctor to ensure your exam has been received.

Q1. Basics [35 points] (Suggested Time: 25 minutes)

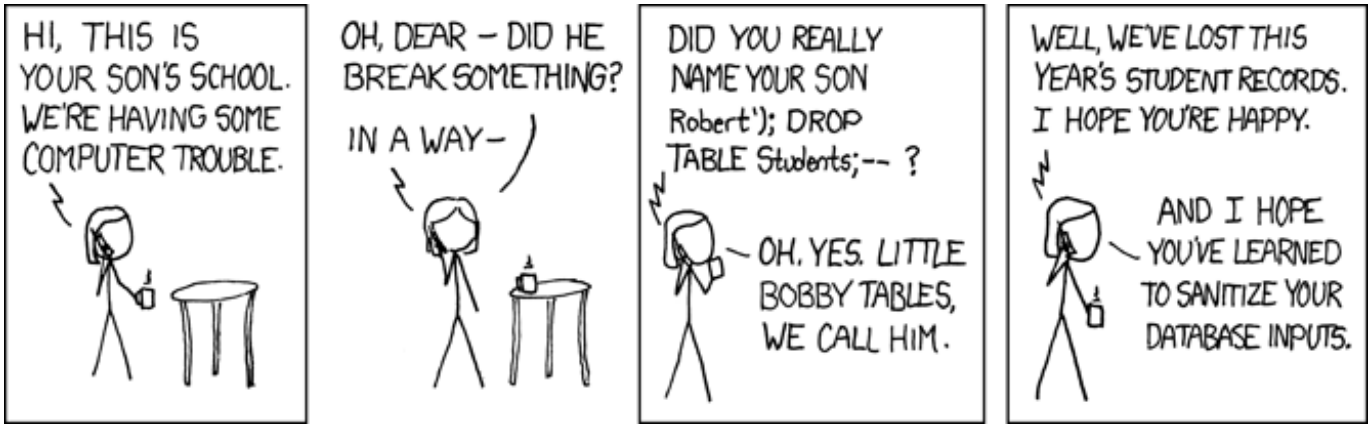

You are given a main program in `Q1.cpp` that contains **syntax errors** ***AND partial statements***. There are comments in Q1.cpp that describe what it should do. Your job is to correct just the syntax errors and fix minor issues.

This main function calls two other functions. These functions are:

- `vote`
- `electionResult`

You are given the header files (`vote.h and election.h`). You are given .cpp files (`vote.cpp and election.cpp`). The .cpp files are totally blank (except comments) and must be created by you. The .h files have function prototypes which have been started **but not completed**.

The functions should perform as described in the .h and .cpp files.

You must complete the following:

- Complete the function prototypes in the .h files.
- Create the function definitions in the .cpp files.
- Fix all of the **syntax errors and partial statements** in `Q1.cpp` so that it compiles and runs correctly. **DO NOT** change `Q1.cpp` other than fixing the required syntax errors and fixing the partial statements.

Tips:

1. Read the main program and see what the problem is trying to do. Ask questions early!
2. Get main() to run first by commenting out the functions and headerfiles. Just get the other issues fixed first.
3. Next focus on figuring out the function prototypes and including the headerfiles.
4. Finally uncomment the functions one at a time and get them implemented.
5. Remember if your code does not compile then you will not get credit!

You should submit the following **five** files for this problem:

`Q1.cpp`, `vote.h`, `vote.cpp`, `election.h`, and `election.cpp`.

Remember to save your work often!

Q2. Functions/Arrays/File I/0 [40 points] (Suggested Time: 40 minutes)

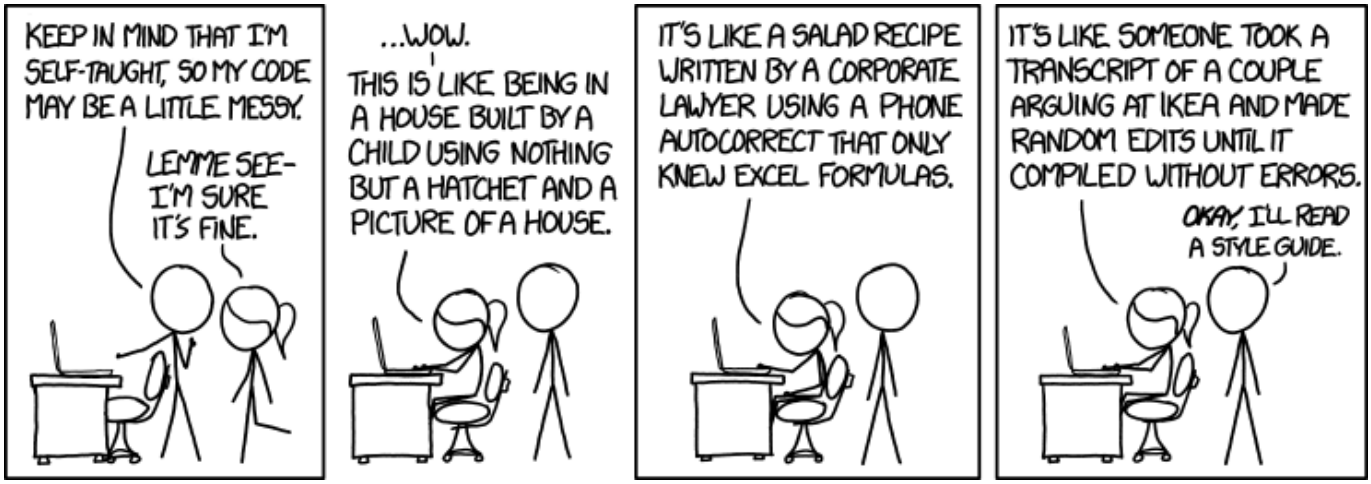

You have been given the following source code files: `Q2.cpp`, `breakfast.h`, `breakfast.cpp`, `waiter.h`, `waiter.cpp`. The file `Q2.cpp` contains the `main` function and the other four files contain the code for functions that will be used in the `main` function.

The `main` function is a simple program for testing the other functions in this problem. Feel free to use this to test your code. The EC327 Staff will use its own `main` function to test your code. Nevertheless please submit `Q2.cpp`. **The current Q2.cpp DOES NOT contain any errors.**

Since we will be using our own main function, DO NOT CREATE ANY OTHER FUNCTIONS THAN ARE PROVIDED IN THE TWO HEADER FILES.

You must complete the following:

- In `waiter.h` you must uncomment the correct function prototype for the function required. Each function only has one correct function prototype. Remember that the current Q2.cpp calls the functions as intended.
- In `waiter.cpp` you must create the needed code for the functions in the function prototypes. The comments provide more details. Some of the code is provided. Look for the "FIX" comments.
- In `breakfast.h` you need to add the function prototypes. User `breakfast.cpp` for help.
- In `breakfast.cpp` you must create the needed code for the functions in the prototypes. Some of the code is provided. You need to complete this or correct syntax errors.

`Orders.txt` will be produced by your code. We will be looking at this so please be sure to turn this in.

You should submit the following files for this problem:
`Q2.cpp`, `waiter.h`, `waiter.cpp`, `breakfast.h`, `breakfast.cpp`, `Order.txt`

Remember to save your work often!

Q3. Pointers [25 points] (Suggested Time: 20 minutes)

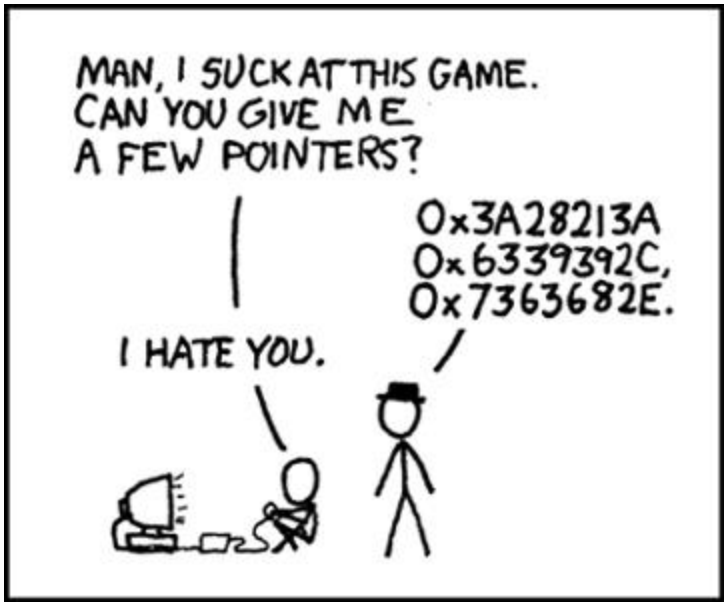

In this question you are given one file, `Q3.cpp`. You are given a `main() function` (with no errors). You can use this function to test your code. We will be changing this main function. There are two functions:

`ptrsAreReallyFun` and `shiftElementsLower`

`ptrsAreReallyFun` you need to write code for the following picture.

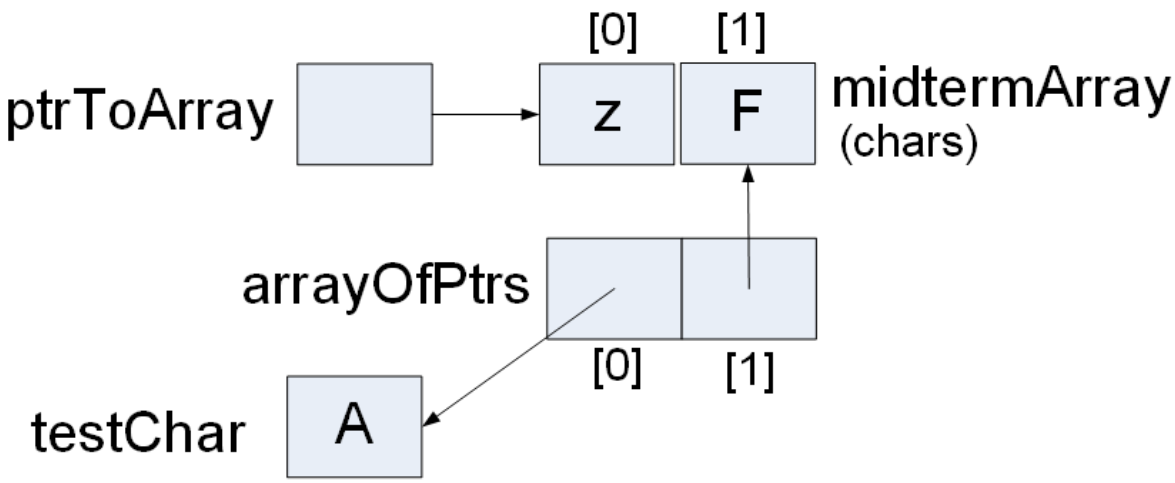

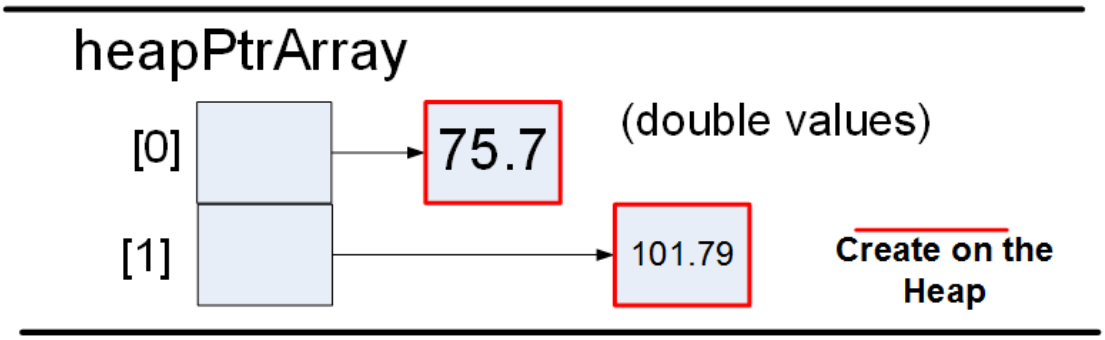

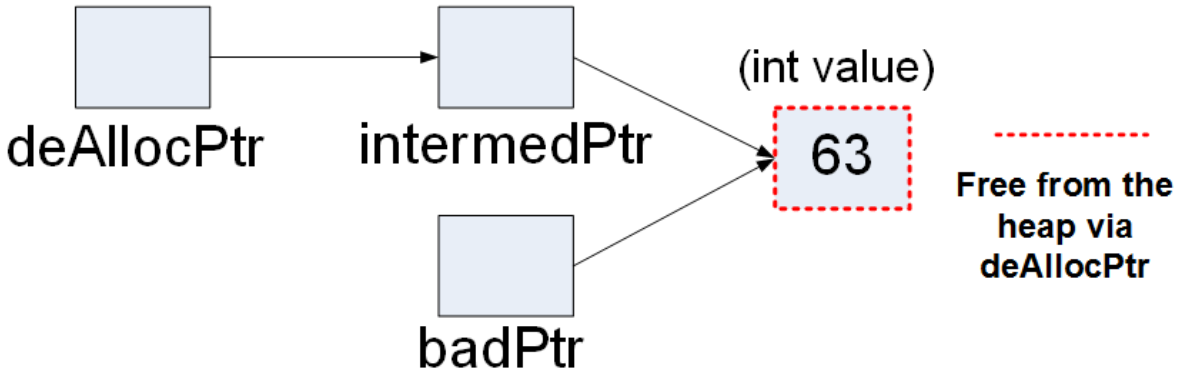

`shiftElementsLower` you must write and is described in the .cpp file.

What to turn in: `Q3.cpp` (only this one file)

Hint:
Make sure that your code compiles regardless of if your functions work fully or not. We will be running our own main file and having code that compiles will be to your advantage.

End-of-Exam Checklist

- Your midterm folder should contain:

    - `Q1.cpp`
    - `election.cpp`
    - `election.h`
    - `vote.cpp`
    - `vote.h`

    - `Q2.cpp`
    - `breakfast.cpp`
    - `breakfast.h`
    - `waiter.cpp`
    - `waiter.h`
    - `Orders.txt`

    - `Q3.cpp`

Zip your exam folder and submit to the **Midterm Exam Portal on Blackboard**, following the procedure discussed in Question 0. (Remember that you'll need to use revision numbers on the filename if you've already submitted your exam.)

- **Before logging off, check with the staff to make sure that your exam has been received!**