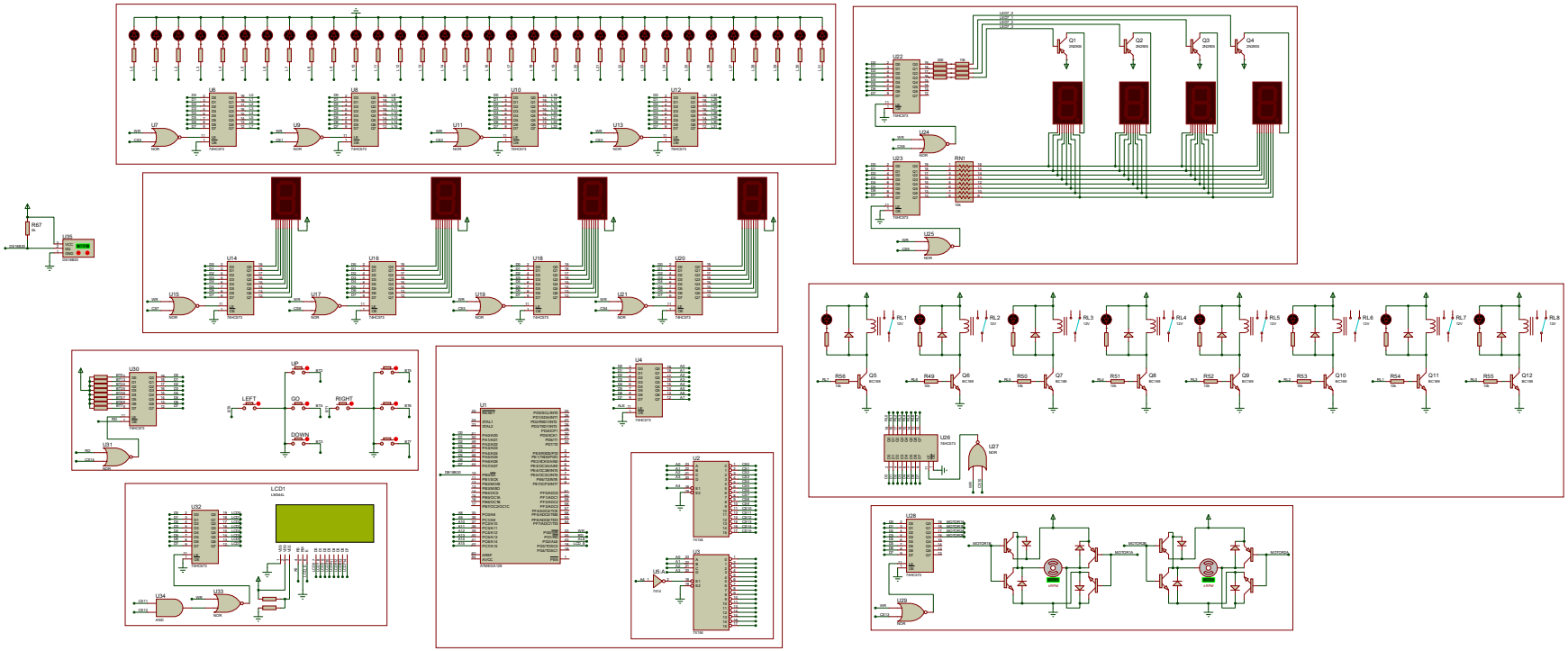
LEFT
GO
RIGHT
DOWN
LCD1
LM016L
RL1
RL2
RL3
RL4
RL5
RL6
RL7
RL8
MOTOR1A
MOTOR1B
MOTOR2A
MOTOR2B