QTY.	CMS UNIT	MATL. MK.	DESCRIPTION	REMARKS	NON STOCK
2	BAVF	BAVF	BAR-CU IN X 1IN X 12FT		
35	RFVE-D	RFVE	CIRCUIT BREAKER, AMB COMP, 2P, 30A		
1	RFVG	RFVG	CIRCUIT BREAKER, AMB COMP, 2P, 100A		
2	RFWH	RFWH	PANEL BENELEX 40Z 28IN X 41IN X IN		
1	RGRG-D	RGRG	SMBD REAR DOOR, 29-3/4" X 90"	D-31-D1	YES
		RGUT	SWITCHBOARD ANGLE FRAME 30 X 90 X 23IN	D-31-D1	YES

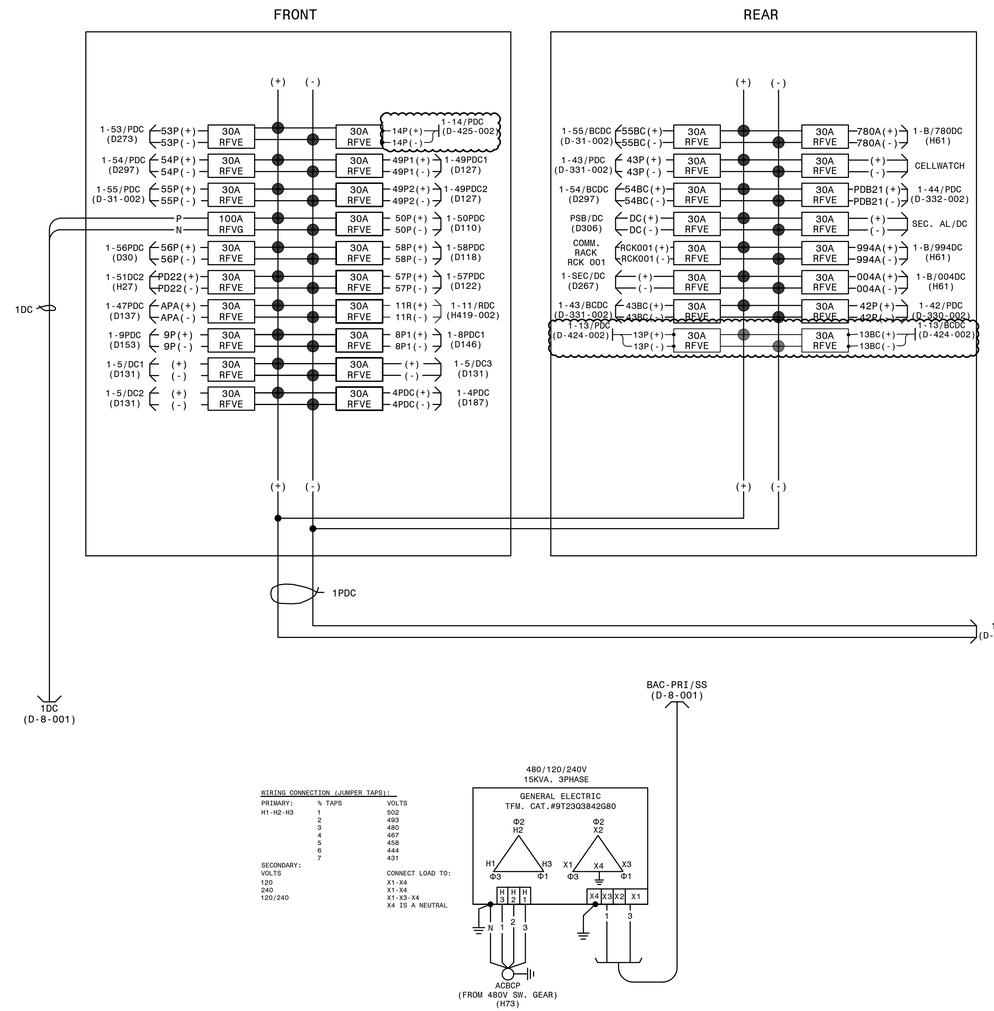

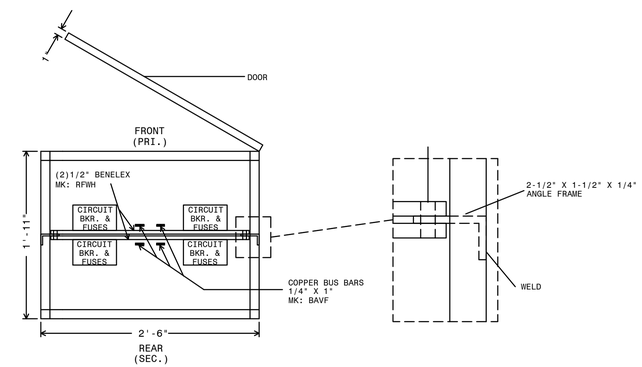

PLAN VIEW
(1-1/2"=1'-0")

DETAIL

WIRING CONNECTION (JUMPER TAPS):

PRIMARY:	% TAPS	VOLTS
H1-H2-H3	1	502
	2	493
	3	480
	4	467
	5	458
	6	444
	7	431

SECONDARY: VOLTS	CONNECT LOAD TO:
120	X1-X4
240	X1-X4
120/240	X1-X3-X4
	X4 IS A NEUTRAL

CABLE ENTRY IS FROM TOP OF PANEL

REFERENCES:

01-173-D8-001	PRIMARY DC SUPPLY AND BATTERY CHARGER ELEMENTARY
01-173-D8-002	PRIMARY DC - MOBILE BATTERY TRAILER CONNECTIONS
01-173-D103-001	SECONDARY DC SUPPLY AND BATTERY CHARGER ELEMENTARY
01-173-D104-001	PANEL #19 WIRING DIAGRAM SECONDARY D.C. PANEL
01-173-D104-002	SECONDARY DC - MOBILE BATTERY TRAILER CONNECTIONS
01-173-D13	S.S. & THROWOVER CAB #2 WRG & CONN. DIAGRAM
01-173-D215	230KV YARD STATION SERVICE & THROWOVER CABINET #1

P.I.#1899807

BURNS McDONNELL
4004 SUMMIT BLVD., NE, SUITE 1200
ATLANTA, GA 30319
PHONE: (770)587-4776

Burns & McDonnell Engineering Co. Inc.
GA COA NUMBER: PE-002 / GB-002-00100
EXPIRATION DATE: 6/30/2026

THE REGISTRANT OF THE NEWLY APPLIED SEAL, DATED XX/XX/2024, ONLY ASSUMES RESPONSIBILITY FOR THE CHANGES AS INDICATED BY THE FOLLOWING REVISIONS: 14.

AUTOCAD ELECTRICAL
THIS DRAWING CONTAINS AUTOCAD ELECTRICAL ELEMENTS

(BB-D-X-CP-01) 666-D-CS

08	BAK	TM		11/11/2013	PI: 1500701	09	REL	LKJ	2/1/2016	PI: FC8	10	JCM	JCM	2/5/2021	PI: 1855101	11	BPE	BPE	BPE
REMOVE CABLE 1-53PDC. ADD CABLE 1-53PDC FOR PANEL #53 REPLACEMENT.						SHOWN FOR RECORD ONLY.					REMOVE CABLE 1-54PDC & 1-54/BCDC. SHOW CABLES IN CORRECT LOCATIONS ON REAR PANEL, FOR RECORD ONLY.					ADD CIRCUIT PSB/DC FOR DC SUPPLY FOR PHYSICAL SECURITY BOARD.			

06/10/2022	PI: 1609401	12	BPE	BPE	BPE	05/31/2023	PI: 1930501	13	BPE	BPE	BPE	2/28/2024	PI: 1943901	14	RJH	RCL	USPP	4/1/2024	PI: 2014906
UPDATE CIRCUITS FOR NEW PANEL #55 NELSON LINE. ADD CIRCUITS FOR NEW PANELS #43 SVS LINE, #44 BUS #1 PRIMARY DIFFERENTIAL AS SHOWN. SECYL ALDC (H79) CIRCUIT REMOVED, FOR RECORD ONLY. DWG UPDATED FOR NEW STANDARD DC BATTERY SYSTEM UPGRADE.								UPDATE DRAWING PER FIELD CHANGES AS SHOWN.						UPDATE REFERENCE FOR CABLE 1-11/RDC FOR INSTALLATION OF NEW TRANSFER TRIP PANEL.					

15	EG	SW	AA	8/20/2024	PI: 1899807	
INSTALL TWO 30A CIRCUIT BREAKERS AND CABLES 1-13/PDC, 1-13/BCDC, AND 1-14/PDC.						

GEORGIA POWER
A SOUTHERN COMPANY

FACILITY NAME: MCGRAU FORD TS

TITLE: PANEL #1 DETAILS & WIRING DIAGRAM PRIMARY D.C. PANEL

DRAWN:	JPB				
CHECKED:	JWH	TYPE:	WD	FACILITY #: 01-173	D-
APPROVED:		SCALE:	AS SHOWN		
DATE:	7/14/2000	BOM:			

NUMBER: 7 SHEET: - 001 REV: - 14

ASC FACS: ALT DWG NUM:

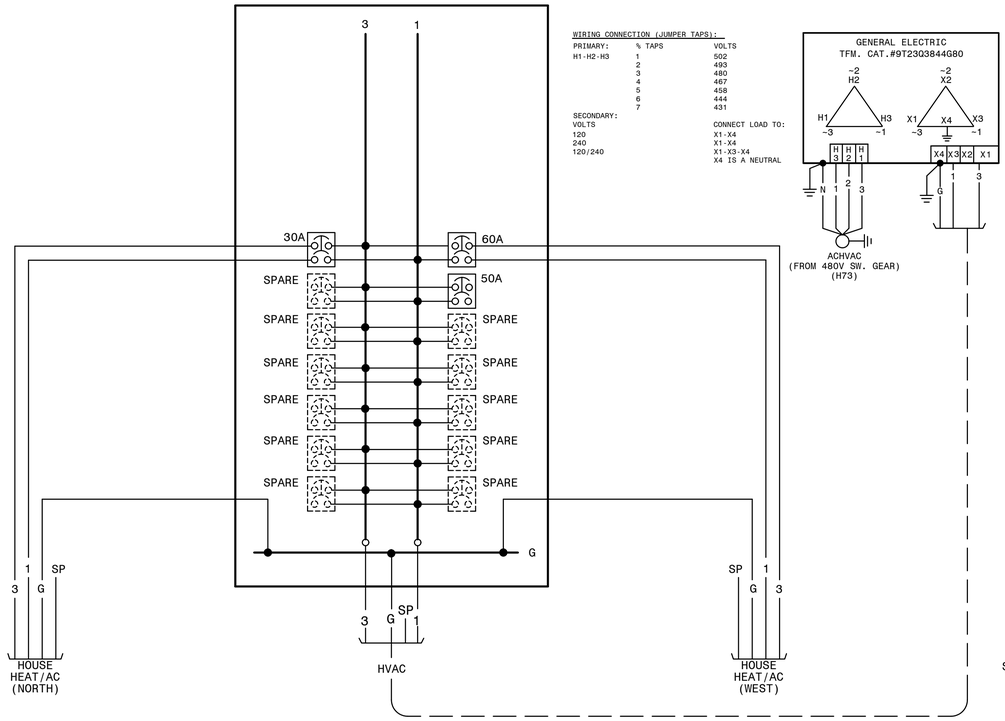

WIRING CONNECTION (JUMPER TAPS):

PRIMARY:	% TAPS	VOLTS
H1-H2-H3	1	502
	2	493
	3	480
	4	467
	5	458
	6	444
	7	431

SECONDARY: VOLTS	CONNECT LOAD TO:
120	X1-X4
240	X1-X4
120/240	X1-X3-X4
	X4 IS A NEUTRAL

HVAC A.C. PANEL WIRING DIAGRAM

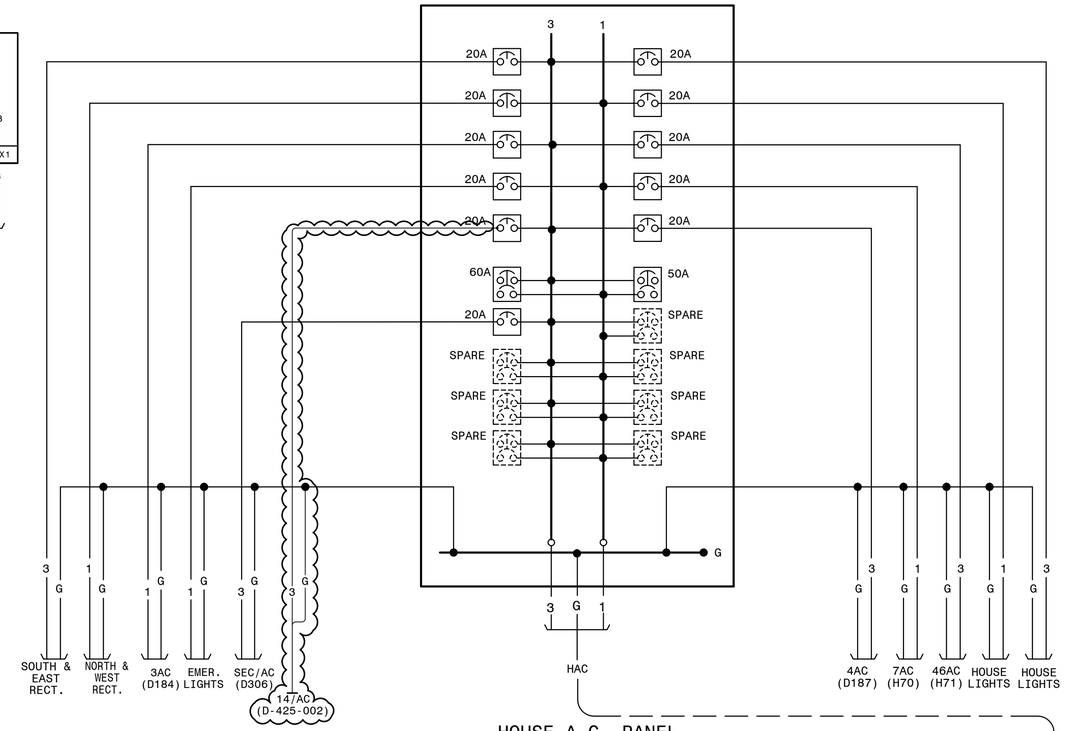

HOUSE A.C. PANEL WIRING DIAGRAM

480/120/240V
45KVA. 3PHASE

WIRING CONNECTION (JUMPER TAPS):

PRIMARY:	% TAPS	VOLTS
H1-H2-H3	1	502
	2	493
	3	480
	4	467
	5	458
	6	444
	7	431

SECONDARY: VOLTS	CONNECT LOAD TO:
120	X1-X4
240	X1-X4
120/240	X1-X3-X4
	X4 IS A NEUTRAL

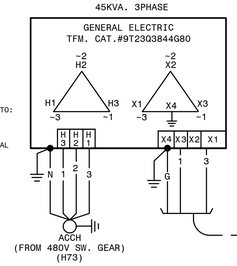

REFERENCES:
01-173-H64 ONE LINE DIAGRAM - 480VAC STATION SRVC.
01-173-H73 480VAC SWGR. CONNECTION DIAG.

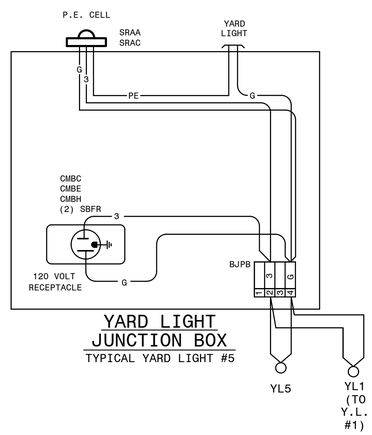

YARD LIGHT JUNCTION BOX

TYPICAL YARD LIGHT #5

AUTOCAD ELECTRICAL

THIS DRAWING CONTAINS AUTOCAD ELECTRICAL ELEMENTS

P.I.#1899807

BURNS McDONNELL
4004 SUMMIT BLVD. NE, SUITE 1200
ATLANTA, GA 30319
PHONE: (770)587-4776
Burns & McDonnell Engineering Co. Inc.
GA ENGINEERING LICENSE: PEF000100
EXPIRATION DATE: 6/30/2026

THE REGISTRANT OF THE NEWLY APPLIED SEAL, DATED XX/XX/2024, ONLY ASSUMES RESPONSIBILITY FOR THE CHANGES AS INDICATED BY THE FOLLOWING REVISIONS:

							PI:												PI:	01	JLC	AJW		06/29/05	PI:	02	JLC	AJW		09/15/05	PI:
																				ADDED DRAWING REFERENCES TO 480VAC SWITCHGEAR SS, ADDED TRANSFORMERS, 480VAC CABLES ACHVAC, ACCH. TYPICAL YARD LIGHT JUNCTION BOX. ADDED CABLES 7AC, AND 46AC.							ADDED CABLE 3AC AND CABLE 4AC.						

03	AJW	PWJ		01-22-07	PI: 0848727
REVISED 480/120/240 TRANSFORMER CONN. FOR RECORD ONLY.					

04	AJW	PWJ		09-10-07	PI: 0848727
CHANGED CABLE NAME.					

05	BPE	BPE	BPE	06/10/2022	PI: 1609401
ADD CABLE SEC/AC FOR PHYSICAL SECURITY BACKBOARD AC SUPPLY.					

06	EG	DN	AA	08/20/2024	PI: 1899807
INSTALL CABLE 14/AC.					

GEORGIA POWER
A SOUTHERN COMPANY

FACILITY NAME: MCGRAU FORD TS

TITLE: MISCELLANEOUS WIRING DIAG.

DRAWN:	JLC	TYPE:	WD	FACILITY #:	NUMBER:	SHEET: REV:
CHECKED:	AJW	SCALE:	NO SCALE	01-173	D- 9	- 001 - 05
APPROVED:	AJW	BOM:				
DATE:	06-29-05	ASC FACS:				ALT DWG NUM:

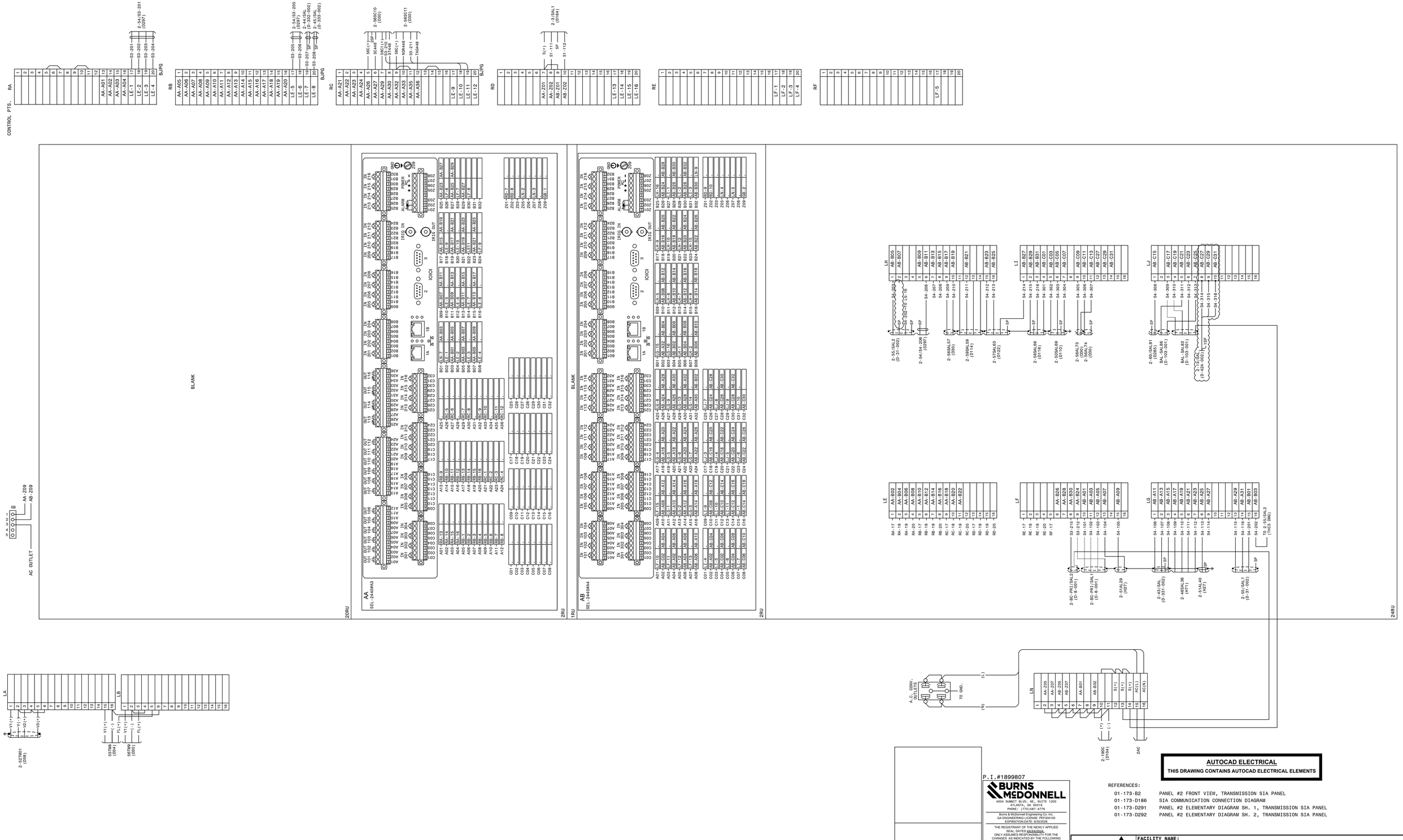

09	CSM	DML	3/5/2015	PI: 1451605	10	CSM	DML	4/22/2015	PI: 1451605	11	CSM	DML	10/7/2015	PI: 1451605	12	BAS	JWH	USPP	3/27/2020	PI: 1616363	13	JCM	JCM	2/5/2021	PI: 1855101
REMOVE CABLE 2-3SAL76 AS SHOWN.					WIRE OUT ANALOG POINTS 6, 10, AND 11 AS SHOWN. INSTALL JUMPERS AS SHOWN.					FIELD CHANGES SHOWN FOR RECORD ONLY.					FC#10 (CC): REPLACE DAQ RTU WITH (2) SEL-2440'S.						REMOVE CABLES 2-54SC04, 2-54SC05, 2-54SC06, 54TM7, 2-54AL45, 2-54SAL46. ADD CABLES 2-54/S3-201, 2-54/S3-205, 2-54/S4-206.				

14	BPE	BPE	BPE	05/31/2023	PI: 1930501	15	BPE	BPE	BPE	02/28/2024	PI: 1943901	16	EG	DN	AA	8/20/2024	PI: 1899807						
UPDATE INPUTS AND OUTPUTS FOR NEW PANELS #44, #45 & #55 & NEW BATTERY CHARGERS AS SHOWN.						UPDATE DRAWING PER FIELD CHANGES AS SHOWN.						ADD CABLE 2-13/SAL. REMOVE WIRE AT LH-2 PER SIA COMMENTS.											

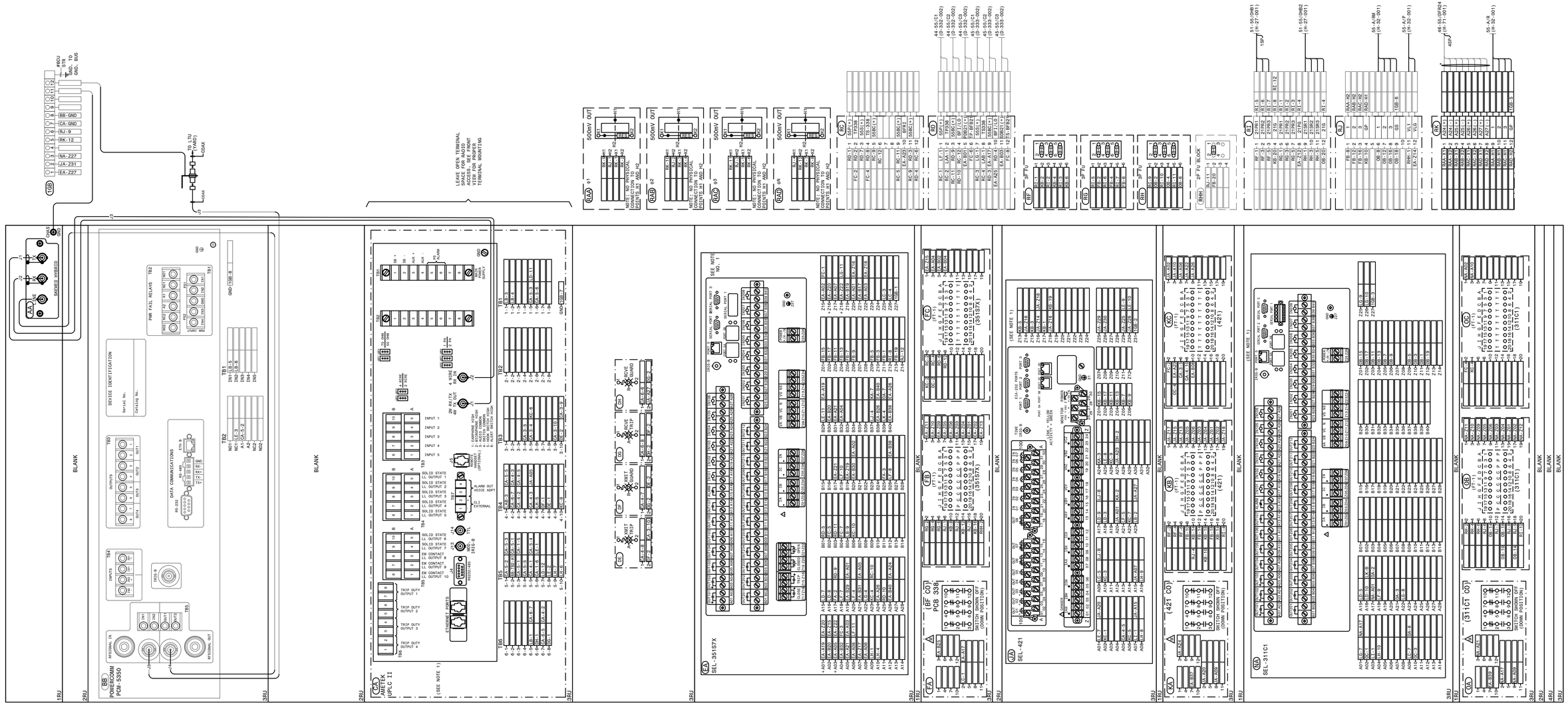

NOTES:

* SHIELD GROUNDED AT OTHER END OF CABLE.

1. FOR DATA CONNECTIONS, SEE COMMUNICATIONS DIAGRAM.

⚠ - MAINTAINED TOGGLE SWITCH

REFERENCES:

01-173-D31-001	PANEL #55 FRONT VIEW & NAMEPLATES
01-173-D31-003	PANEL #55 DC ELEMENTARY DIAGRAM
01-173-D31-004	PANEL #55 AC ELEMENTARY DIAGRAM
01-173-D31-005	PANEL #55 LOGIC DIAGRAM (351S7X)
01-173-D31-006	PANEL #55 LOGIC DIAGRAM (421, 311C1)

P.I.#1899807

BURNS McDONNELL
4004 SUMMIT BLVD., NE, SUITE 1200
ATLANTA, GA 30319
PHONE: (770)587-4776

Burns & McDonnell Engineering Co. Inc.
GA ENGINEERING LICENSE: PE000100
EXPIRATION DATE: 6/30/2025

THE REGISTRANT OF THE NEWLY APPLIED SEAL DATED 30XXXXXXL, ONLY ASSUMES RESPONSIBILITY FOR THE CHANGES AS INDICATED BY THE FOLLOWING REVISIONS:

LRP: SELP_N-14-001

AUTOCAD ELECTRICAL

THIS DRAWING CONTAINS AUTOCAD ELECTRICAL ELEMENTS

TRANS. LINE DIRECTIONAL COMPARISON UNBLOCKING/STEP DISTANCE-(STRAIGHT BUS)

PI:	PI:	PI:	PI:	PI:	PI:	PI:

01	BPE	BPE	BPE	02/28/2024	PI: 1943901	UPDATE DRAWING PER FIELD CHANGES AS SHOWN.
02	EG	SW	AA	12/17/2024	PI: 1899807	REMOVE CONNECTION TO LE-9 FROM SIA PANEL PER SIA COMMENTS.

GEORGIA POWER
A SOUTHERN COMPANY

DRAWN:	BPE
CHECKED:	BPE
APPROVED:	1943901
DATE:	05/31/2023

FACILITY NAME: MCGRAU FORD TS

TITLE: PANEL #55, WIRING DIAGRAM - NELSON 230KV LINE (STRAIGHT BUS), SEL421 (PRI-DCUB), SEL311C1 (SEC), SEL351S7X (BF/RECL) RELAYING

TYPE:	WD	FACILITY #:	01-173		
SCALE:	N.T.S	NUMBER:	D- 31	SHEET:	REV: - 002 - 01
BOM:					
ASC FACS:				ALT DWG NUM:	DCUB

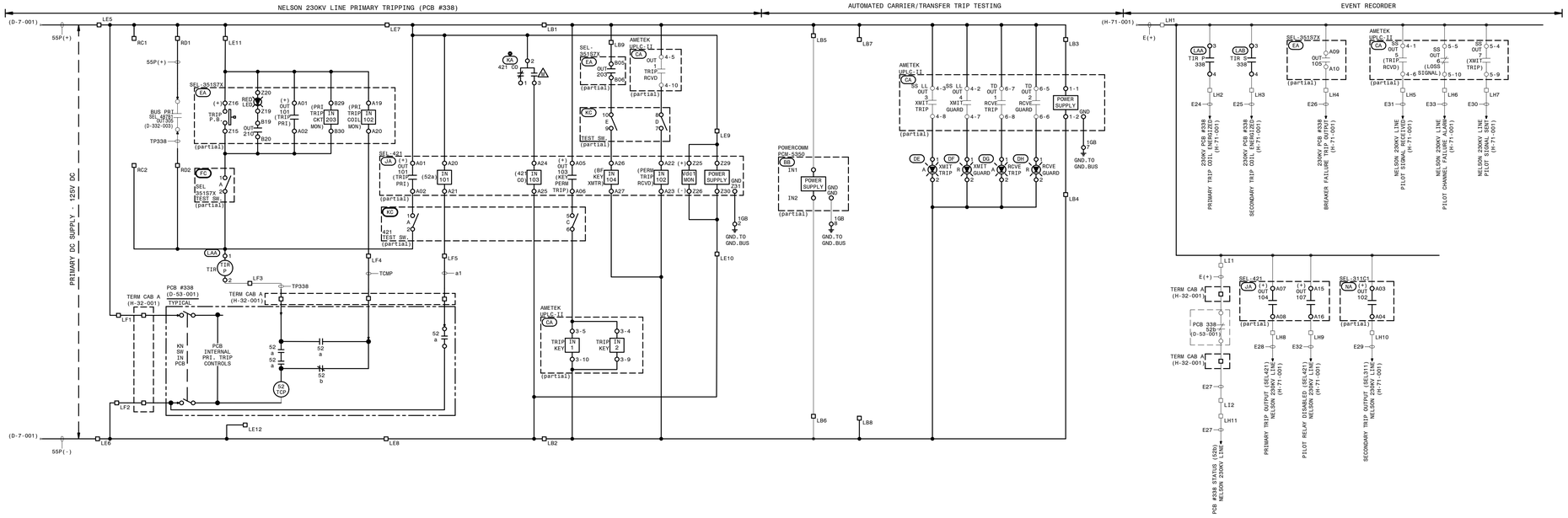

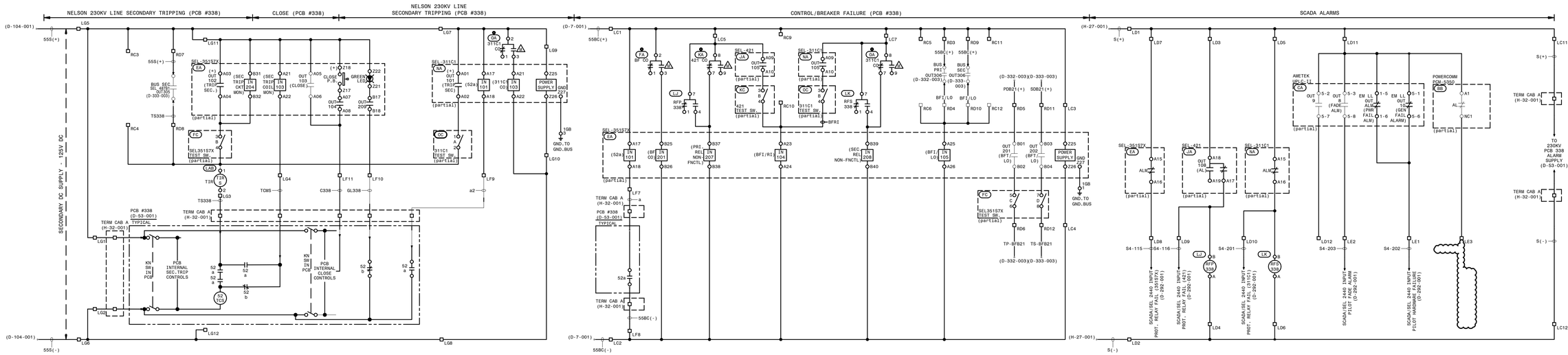

SEL351S7X — I/O ASSIGNMENTS

ELEMENT	FUNCTION
IN101	BREAKER 52a INPUT
IN102	PRIMARY TRIP COIL MONITOR
IN103	SECONDARY TRIP COIL MONITOR
IN104	BREAKER FAILURE/RECLOSE INITIATE
IN105	BREAKER FAILURE INITIATE/LOCKOUT
IN201	BREAKER FAILURE CO SWITCH INPUT
IN203	PRI. TRIP CIRCUIT MONITOR
IN204	SEC. TRIP CIRCUIT MONITOR
IN207	LINE PRI. (421) PROT. RELAY NON-FUNCT.
IN208	LINE SEC. (311C1) PROT. RELAY NON-FUNCT.
OUT101	TRIP (PRIMARY TRIP COIL)
OUT102	TRIP (SECONDARY TRIP COIL)
OUT103	CLOSE
OUT104	PERMITS "BIG RED BUTTON" CLOSE IF NO HOT LINE TAG IS APPLIED AND IF BREAKER TRIP COIL, RELAY SELF-TEST ARE OKAY, & NO BF LOR OR OTHER LOR'S INPUTS ASSERTED
OUT106	BKR. FAIL. OUTPUT (DME)
OUT201	BKR. FAIL. PRI. TRIP & LOCKOUT
OUT202	BKR. FAIL. SEC. TRIP & LOCKOUT
OUT203	BF KEY TRANSMITTER
OUT209	OPENS GREEN LED ON RELAY
OUT210	OPEN RED LED ON RELAY
ALARM	RELAY FAIL ALARM

SEL 421 — (PRI. LINE RELAYING) I/O ASSIGNMENTS

ELEMENT	FUNCTION
IN101	BREAKER 52a INPUT
IN102	PERMISSIVE TRIP RECEIVED
IN103	421 CO SWITCH INPUT
IN104	BREAKER FAILURE KEYS CARRIER
OUT101	TRIP (PCB PRIMARY TRIP COIL)
OUT103	KEY PERM(SSIVE TRIP
OUT104	PRIMARY RELAY TRIP OUTPUT (DME)
OUT105	BREAKER FAILURE/RECLOSE INITIATE
OUT107	PILOT RELAYING DISABLED (DME)
OUT108	RELAY FAIL ALARM

SEL311C1 — (SEC. LINE RELAYING) I/O ASSIGNMENTS

ELEMENT	FUNCTION
IN101	BREAKER 52a INPUT
IN103	311C1 CO SWITCH INPUT
OUT101	TRIP (PCB SECONDARY TRIP COIL)
OUT102	SECONDARY RELAY TRIP OUTPUT (DME)
OUT105	BREAKER FAILURE/RECLOSE INITIATE
ALARM	RELAY FAIL ALARM

AMETEK UPLC-II — I/O ASSIGNMENTS

ELEMENT	FUNCTION
IN1	KEY PERMISSIVE TRIP
IN2	KEY PERMISSIVE TRIP
SS LL OUT1	PERMISSIVE TRIP RECEIVED
SS LL OUT3	XMIT TRIP (LIGHT)
SS LL OUT4	XMIT GUARD (LIGHT)
SS OUT5	TRIP RECEIVED (DME)
SS OUT6	LOSS OF SIGNAL (DME)
SS OUT7	TRANSMIT TRIP (DME)
EM LL OUT8	FADE ALARM
EM LL OUT9	SPARE
EM LL OUT10	GENERAL ALARM
TO OUT1	RECEIVED TRIP (LIGHT)
TO OUT2	RECEIVED GUARD (LIGHT)
EM LL OUT ALM	ALARM POWER

LEGEND:

- SLIDING LINK TERMINALS OR PHEONIX PLUG
- BARRIER BLOCK TERMINALS
- LED INDICATING LIGHT
- SWITCH SHOWN IN OFF POSN

TYPICAL LABEL

WIRE LABEL → *P(+)
DEVICE DESIGNATION → RC
ELEM. SHEET NUMBER → 7
WIRE LABEL → TPZ22
TERMINAL NUMBER → 1, 2, 3

SWITCH/AUX RELAY CONTACT DEVELOPMENT

RFP338, RFS338 P&B KUP RELAY KUP-14D15-110

CONTACTS	DEVELOPED	RESERVED
7	X	
8	X	
9	X	

421 CO, 311C1 CO, BF CO TOGGLE SWITCH MICRO SWITCH MS24525-23

CONTACTS		MAINTAINED POSITIONS UP (REMOTE CLOSED)	DOWN (LOCAL OPEN)
1	1-2		X
	2-3	X	
2	4-5		X
	5-6	X	
3	7-8		X
	8-9	X	
4	10-11		X
	11-12	X	

AUTOCAD ELECTRICAL

THIS DRAWING CONTAINS AUTOCAD ELECTRICAL ELEMENTS

REFERENCES:

01-173-D-31-001 PANEL #55 FRONT VIEW & NAMEPLATES
01-173-D-31-002 PANEL #55 WIRING DIAGRAM
01-173-D-31-004 PANEL #55 AC ELEMENTARY DIAGRAM
01-173-D-31-005 PANEL #55 LOGIC DIAGRAM (351S7X)
01-173-D-31-006 PANEL #55 LOGIC DIAGRAM (421, 311C1)

TRANS. LINE DIRECTIONAL COMPARISON UNBLOCKING/STEP DISTANCE-(STRAIGHT BUS)

P.I.#1899807

BURNS McDONNELL
4004 SUMMIT BLVD. NE, SUITE 1200
ATLANTA, GA 30319
PHONE: (770)587-4776

Burns & McDonnell Engineering Co. Inc.
GA ENGINEERING LICENSE: PEF000100
EXPIRATION DATE: 6/30/2026

THE REGISTRANT OF THE NEWLY APPLIED SEAL DATED 5/30/2023 ONLY ASSUMES RESPONSIBILITY FOR THE CHANGES AS INDICATED BY THE FOLLOWING REVISIONS:

LNP SELP_H_12_001

	PI:		PI:		PI:	
	PI:		PI:		PI:	
01	BPE	BPE	BPE	08/01/2023	PI: 1943901	UPDATE CONTACT TABLE PER PCA MARKUP. REMOVE 43 SWITCH CONTACTS TO MATCH PCB EQUIPMENT DRAWINGS AS SHOWN.
02	BPE	BPE	BPE	02/28/2024	PI: 1943901	UPDATE DRAWING PER FIELD CHANGES AS SHOWN.
03	EG	SW	AA	12/17/2024	PI: 1899807	REMOVE CONNECTION TO LE-3 FROM SIA PANEL PER SIA COMMENTS.

GEORGIA POWER — A SOUTHERN COMPANY

FACILITY NAME: MCGRAU FORD TS

TITLE: PANEL #55, DC ELEMENTARY - NELSON 230KV LINE, SEL421 (PRI DCUB), SEL311C1 (SEC), SEL351S7X (BF/RECL) RELAYING

DRAWN: BPE	TYPE: 52	FACILITY #: 01-173	NUMBER: 31	SHEET: - 003 -	REV: 02
CHECKED: BPE	SCALE: N.T.S.				
APPROVED: 1943901	BOM:				
DATE: 05/31/2023	ASC FACS:		ALT DWG NUM:DCUB		

QTY.	CMS UNIT	MATL. MK.	DESCRIPTION	REMARKS	NON STOCK
8	BAVF	BAVF	BAR-CU IN X 1IN X 12FT		
41	RFVE-D	RFVE	CIRCUIT BREAKER, AMB COMP, 2P, 30A		
1	RFVG	RFVG	CIRCUIT BREAKER, AMB COMP, 2P, 100A		
2	RFWH	RFWH	PANEL-BENELEX 402 28IN X 41IN X IN		
1	RGRG-D	RGRG	SWBD REAR DOOR, FOR 30 X 90 X 21IN PAN.	O-31-D1	YES
			SWITCHBOARD ANGLE FRAME 30 X 90 X 21IN	O-31-D1	

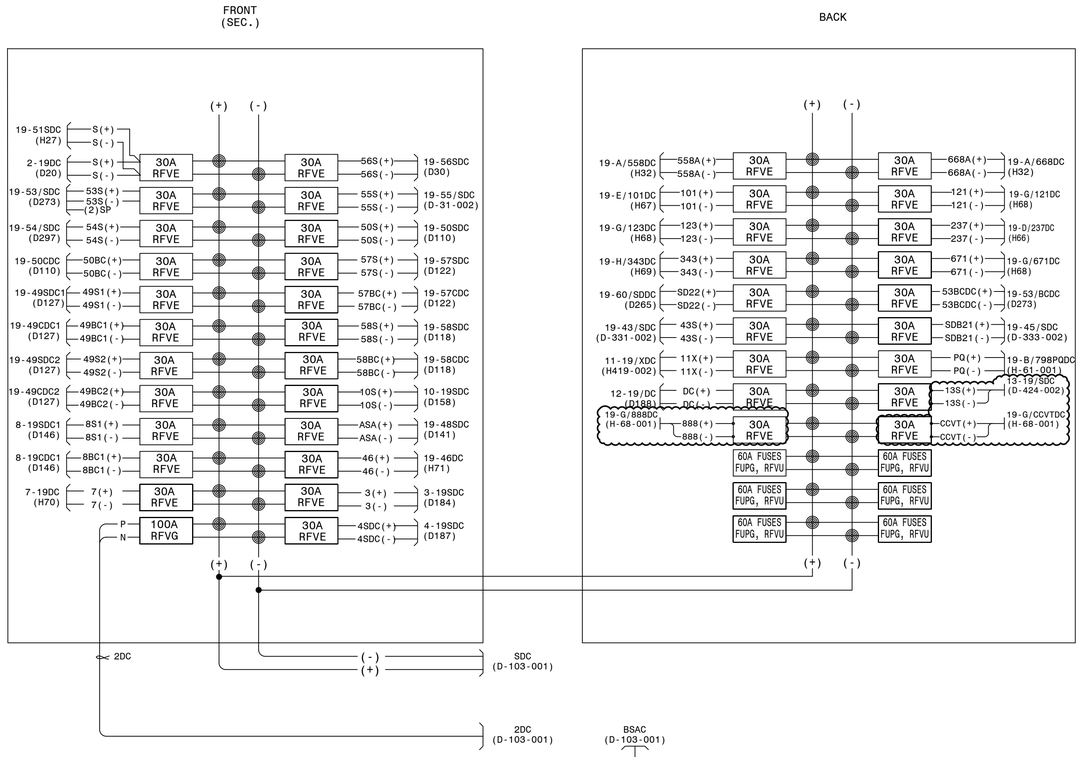

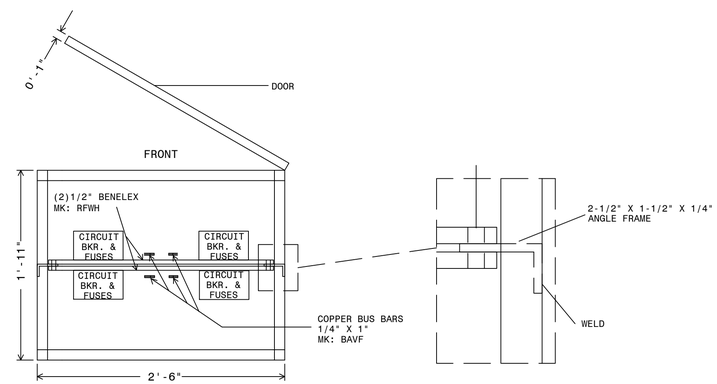

PLAN VIEW
(1-1/2"=1'-0")

WIRING CONNECTION (JUMPER TAPS):

PRIMARY:	% TAPS	VOLTS
H1-H2-H3	1	502
	2	493
	3	480
	4	467
	5	458
	6	444
	7	431

SECONDARY: VOLTS	CONNECT LOAD TO:
120	X1-X4
240	X1-X4
120/240	X1-X3-X4
	X4 IS A NEUTRAL

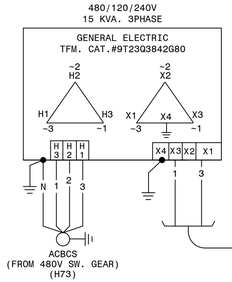

AUTOCAD ELECTRICAL
THIS DRAWING CONTAINS AUTOCAD ELECTRICAL ELEMENTS

REFERENCES:

01-173-D7-001	PANEL #1 WIRING DIAGRAM PRIMARY D.C. PANEL
01-173-D8-001	PRIMARY DC SUPPLY AND BATTERY CHARGER ELEMENTARY
01-173-D8-002	PRIMARY DC - MOBILE BATTERY TRAILER CONNECTIONS
01-173-D103-001	SECONDARY DC SUPPLY AND BATTERY CHARGER ELEMENTARY
01-173-D104-002	SECONDARY DC - MOBILE BATTERY TRAILER CONNECTIONS
01-173-D13	S.S. & THROWOVER CAB #2 WRG & CONN. DIAGRAM

CTLSTD:175.DGN (DCP-B-0-WD)

P.I.#1899807

BURNS McDONNELL
4004 SUMMIT BLVD. NE, SUITE 1200
ATLANTA, GA 30319
PHONE: (770)587-4776
Burns & McDonnell Engineering Co. Inc.
GA ENGINEERING LICENSE: PEF000100
EXPIRATION DATE: 6/30/2026
THE REGISTRANT OF THE NEWLY APPLIED SEAL, DATED 00/00/0000, ONLY ASSUMES RESPONSIBILITY FOR THE CHANGES AS INDICATED BY THE FOLLOWING REVISIONS(): 13.

06	BAK	TM					PI: 1402601
REMOVE CABLE 19-53SDC. ADD CABLE 19-53/SDC, 19-53/BCDC FOR PANEL #53 REPLACEMENT.							
07	CSM	DML			10/10/2015	PI: 1451605	
FIELD CHANGES SHOWN FOR RECORD ONLY.							
08	BAS	JWH	USPP		3/27/2020	PI: 1616363	
FC#10 (CC): UPDATED STATUS POINT NAMES.							
09	JCM	JCM			2/5/2021	PI: 1855101	
REMOVE CABLE 19-54SDC & ADD CABLE 19-54/SDC, FOR PANEL #54 REPLACEMENT.							
10	BPE	BPE	BPE		05/31/2023	PI: 1930501	
UPDATE CIRCUITS FOR NEW PANEL #55 NELSON LINE. ADD CIRCUITS FOR NEW PANELS #43 & #45 AS SHOWN.19-51SDC, 19-A/558DC, 19-A/668DC CORRECT CABLE NAMES, FOR RECORD ONLY.DWG UPDATED FOR NEW STANDARD DC BATTERY SYSTEM UPGRADE.							
11	BPE	BPE	BPE		08/01/2023	PI: 1930501	
INSTALL 30A DC BREAKER FOR SOURCE TO POWER NEW TRANSFER TRIP PANEL #11, PANEL #12, AND SPARE. ADD CABLES 11-19/XDC AND 12-19/DC.							
12	RJH	KDB	USPP		4/1/2024	PI: 2014906	
INSTALL THREE 30A DC BREAKER FOR SOURCE TO POWER NEW TRANSFER TRIP PANEL #11, PANEL #12, AND SPARE. ADD CABLES 11-19/XDC AND 12-19/DC.							
13	EG	SW	AA		8/20/2024	PI: 1899807	
INSTALL TWO 30A CIRCUIT BREAKERS AND CABLES 13-19/SDC, 19-G/888DC, AND 19-G/CCVTDC.							

GEORGIA POWER
A SOUTHERN COMPANY

FACILITY NAME: MCGRAU FORD TS

TITLE: PANEL #19 WIRING DIAGRAM SECONDARY D.C. PANEL

DRAWN: JLC/CP	TYPE: WD	FACILITY #: 01-173	D-	NUMBER: 104	SHEET: - 001 -	REV: 12
CHECKED: AJW/TEB	SCALE: AS SHOWN				
APPROVED:	BOM:				
DATE: 11/22/2004	ASC FACS:			ALT DWG NUM:	

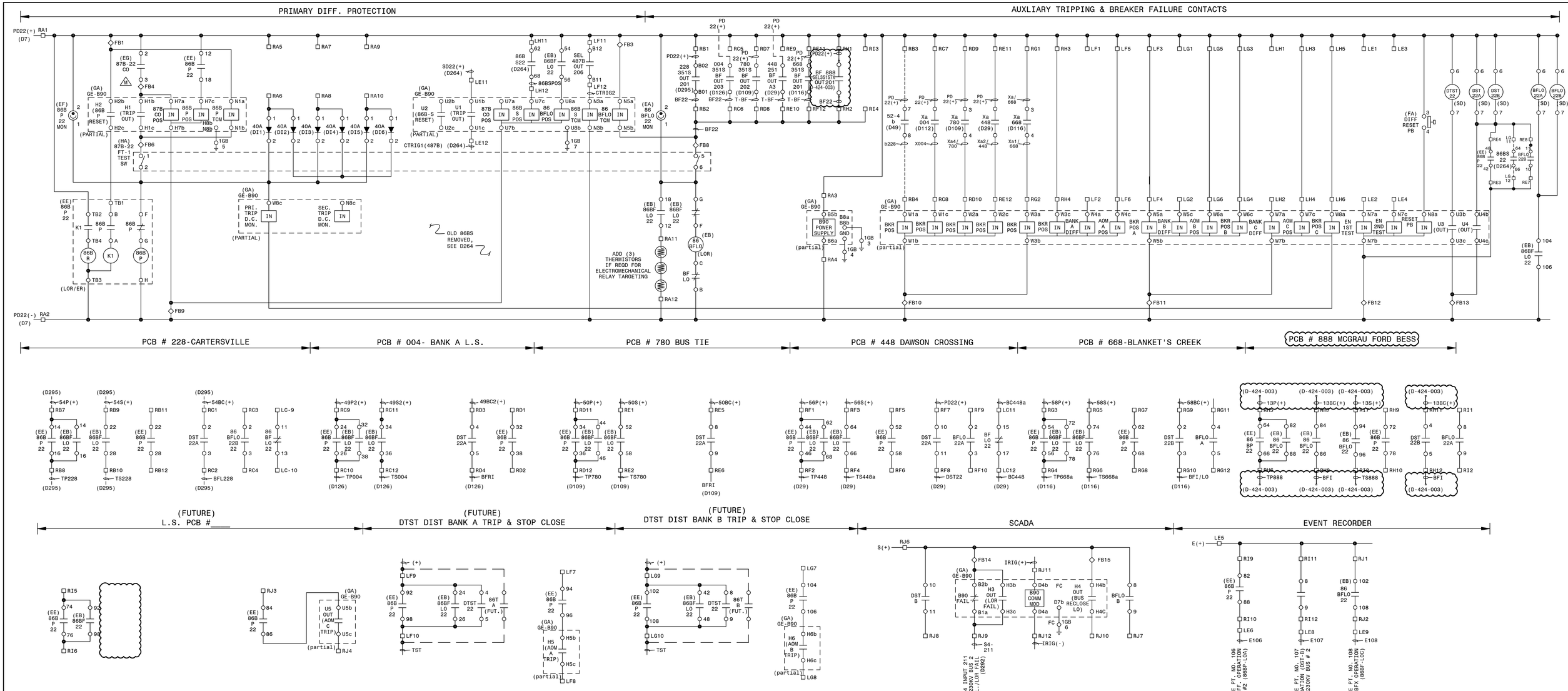

GE B90 INPUTS (BUS DIFFERENTIAL) I/O ASSIGNMENTS

ELEMENT	CONTACT	FUNCTION
IN	H7a/H7b	87B CUTOUT POSITION
IN	H7b/H7c	86B PRIMARY POSITION
IN	N1a/N1b	86B PRIMARY TRIP COIL MONITOR
IN	U7a/U7b	87B CUTOUT POSITION NOT IN SERVICE
IN	U7b/U7c	86B SECONDARY POSITION FROM 487V PANEL
IN	U7b/U8a	86BFLO POSITION
IN	N3a/N3b	86B SECONDARY TRIP COIL MONITOR
IN	N5a/N5b	86B BREAKER FAILURE LOCKOUT MONITOR
IN	W1a/W1b	BREAKER POSITION
IN	W1b/W1c	BREAKER POSITION
IN	W1b/W2a	BREAKER POSITION
IN	W1b/W2c	BREAKER POSITION
IN	W3a/W3b	BREAKER POSITION
IN	W3b/W3c	BREAKER POSITION
IN	W3b/W4a	BANK A DIFFERENTIAL
IN	W3b/W4c	AOM A POSITION
IN	W5a/W5b	BKR POSITION A
IN	W5b/W5c	BANK B DIFFERENTIAL
IN	W5b/W6a	AOM B POSITION
IN	W5b/W6c	BKR POSITION B
IN	W7a/W7b	BANK C DIFFERENTIAL
IN	W7b/W7c	AOM C POSITION
IN	W7b/W8a	BKR POSITION C
IN	W7b/W8c	PRIMARY TRIP DC MONTIOR
IN	N7a/N7b	ENABLE 1ST TEST
IN	N7b/N7c	ENABLE 2ND TEST
IN	N7b/N8a	RESET PUSHBUTTON
IN	N7b/N8c	SECONDARY TRIP DC MONITOR

GE B90 OUTPUTS (BUS DIFFERENTIAL) I/O ASSIGNMENTS

OUT	H1b/H1c	TRIP OUT
OUT	H2b/H2c	86B PRIMARY RESET
OUT	H3b/H3c	LOR FAIL
OUT	H4b/H4c	BUS RECLOSE L.O.
OUT	H5b/H5c	AOM A TRIP
OUT	H6b/H6c	AOM B TRIP
OUT	U1b/U1c	TRIP OUT OSCILLOGRAPHIC CROSS
OUT	U2b/U2c	86B SECONDARY RESET NOT IN SERVICE
OUT	U3b/U3c	DTST OUT
OUT	U4b/U4c	DST OUT
OUT	U5b/U5c	AOM C TRIP
OUT	U6b/U6c	C1s TEST BREAKER NOT IN SERVICE

"86BFLO" LOR RELAY

DECK	CONTACTS	POSITION TRIP	POSITION RESET
1	11–13		X
	12–18	X	
	15–17		X
	14–18	X	
2	21–23		X
	22–28	X	
	25–27		X
	26–24	X	
10	101–103		X
	102–108	X	
	105–107		X
	106–104	X	
CONT	8 C F 6		X

ELECTROSWITCH #7810D

"86TP, 87TS" LOR/ER LOR RELAY

DECK	CONTACTS	POSITION TRIP	POSITION RESET
1	11–13		X
	12–18	X	
	15–17		X
	14–18	X	
2	21–23		X
	22–28	X	
	25–27		X
	26–24	X	
10	101–103		X
	102–108	X	
	105–107		X
	106–104	X	
CONT	8 A K1 TB4 TB3 TB2 K1		X
	F G H	X	X

ELECTROSWITCH #7840DD

87B-P22 CO TOGGLE SWITCH MIGRO SWITCH MS24525-23

CONTACTS		MAINTAINED POSITIONS UP REMOTE CLOSED	DOWN LOCAL OPEN
3–2 / 1	1-2		X
	2-3	X	
6–5 / 4	4-5		X
	5-6	X	
9–8 / 7	7-8		X
	8-9	X	
12–11 / 10	10-11		X
	11-12	X	

NOTE

1. APPLY S(+) OR S(-) AS REQUIRED.

LEGEND

□ - SLIDING LINK TERMINALS

- LED INDICATING LIGHT

TYPICAL LABEL

WIRE LABEL → "P(+)
DEVICE DESIGNATION → 86 TT
ELEM. SHEET NUMBER → (
WIRE LABEL → TPZZZ
TERMINAL NUMBER

AUTOCAD ELECTRICAL
THIS DRAWING CONTAINS AUTOCAD ELECTRICAL ELEMENTS

REFERENCES:

01-173-D111 PANEL #59 F.V. & NAMEPLATES
01-173-D113 PANEL #59 AC ELEMENTARY DIAG.
01-173-D114 PANEL #59 WIRING DIAG.
01-173-H29 SINGLE LINE DIAGRAM, SH 1

P.I.#1899807

BURNS McDONNELL
400N SUMMIT BLVD., NE, SUITE 1200
ATLANTA, GA 30319
PHONE: (770)1587-4776
Burns & McDonnell Engineering Co, Inc.
GA ENGINEERING LICENSE: PEF000100
EXPIRATION DATE: 6/30/2026
THE REGISTRANT OF THE NEWLY APPLIED SEAL, DATED XX/XX/2024, ONLY ASSUMES RESPONSIBILITY FOR THE CHANGES AS INDICATED BY THE FOLLOWING REVISIONS:
ver.

(TRANS. BUS PROTECTION/GE-B90/LOCKOUT/8 CURRENT CKT./STRAIGHT BUS)

C4.4.2

BSP-B90-D13-R0

				PI:					PI:	02	PWJ	RSW	10/31/2006	PI:	03	CP	TEB	2/27/2012	PI: 1402601	04	JOR	GAS	4/24/2013	PI: FC5
										FC3366 (JSH) REVISED WIRE LABELS.					ADD CROSS TRIGGERS TO SEL-487B. ADD U7c (B90) & DST22A/B INPUTS FROM NEW 86BS22. REOVE TEST JUMPER FROM LE1/2. REMOVE OLD 86BS22 CONTACTS. GE-B90 NOW #2 PRI. DIFF. DST 22B CONTACT 2/3 NOW CONNECTED TO BFI/LO. DWG. TITLE NOW CHANGED TO BUS #2 PRI. DIFF.					ADDED SECONDARY DIFF LINKS, CHANGED TO B CONTACT, REMOVED "TEST" BREAKER LABEL, FOR RECORD ONLY.				

05	BAS	JWH	USPP	3/27/2020	PI: 1616363	06	JCM	JCM	2/5/2021	PI: 1855101	07	EG	SW	AA	8/16/2024	PI: 1899807							
FC#1O (CC): UPDATED STATUS POINT NAMES.						REPLACE CARTERSVILLE 230KV LINE RELAYING PANEL. REMOVE REFERENCE TO TEST BREAKER ON GE-B90 W1a INPUT. REMOVE LEFTOVER 86BS22 CONTACTS, FOR RECORD ONLY. FIELD CHANGE: UPDATE MISC GE-B90 CONNECTIONS.						ADD RELAYING FOR PANEL 13.											

GEORGIA POWER — A SOUTHERN COMPANY

FACILITY NAME:	MCGRAU FORD TS		
TITLE:	PANEL #59 DC ELEM. DIAG. 230KV BUS PRI. DIFF. NO. 2 - GE B90 LOCKOUT REL		
DRAWN: JLC	TYPE: 52	FACILITY #: 01-173	D- 112 - 001 - 06
CHECKED: PSA	SCALE: NO SCALE		NUMBER / SHEET / REV
APPROVED: AJW	BOM:		
DATE: 1/30/2005	ASC FACS:		ALT DWG NUM:

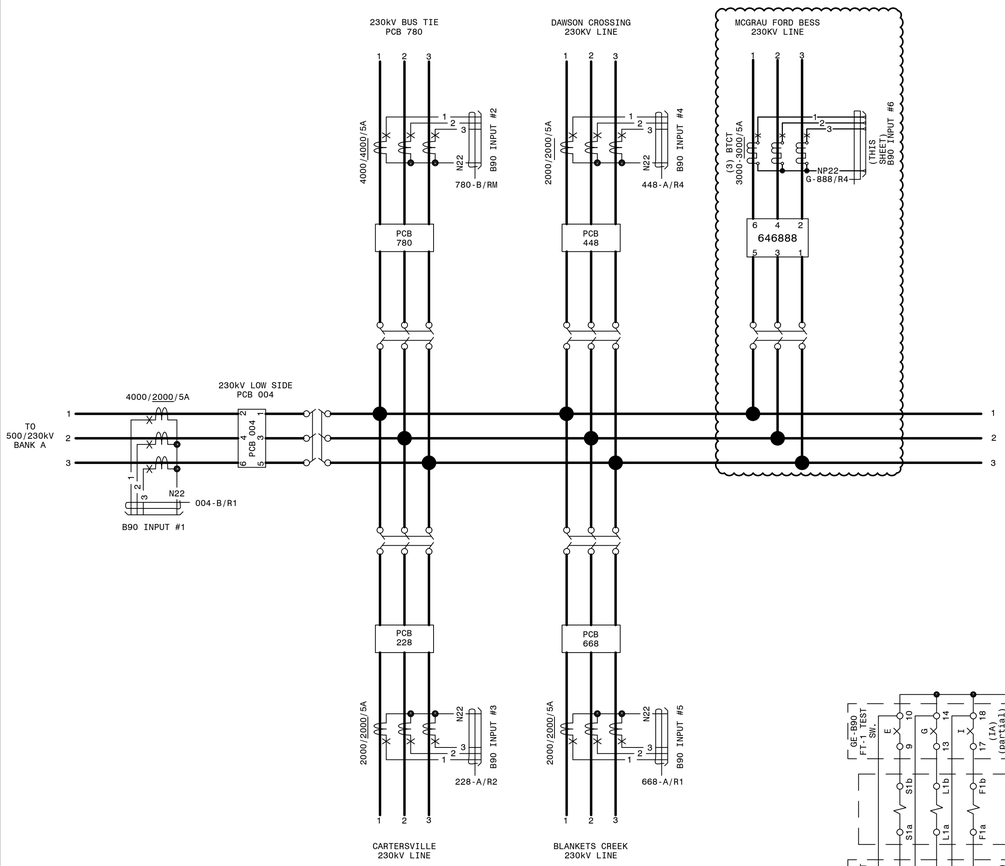

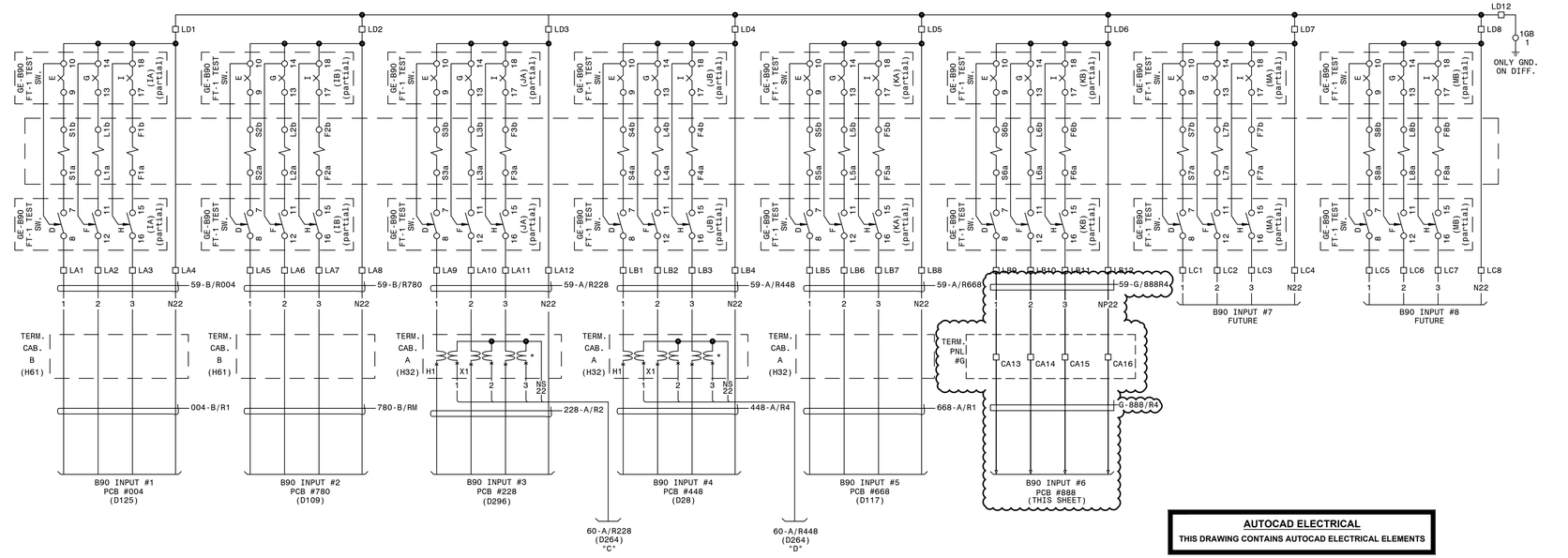

* (3) AUX. C.T., 5:5A, T400

AUTOCAD ELECTRICAL

THIS DRAWING CONTAINS AUTOCAD ELECTRICAL ELEMENTS

REFERENCES:

01-173-D111	PANEL #59 F.V. & NAMEPLATES
01-173-D112	PANEL #59 DC ELEMENTARY DIAG.
01-173-D114	PANEL #59 WIRING DIAG.
01-173-H24	SINGLE LINE DIAGRAM, SH 1

P.I.#1899807

BURNS McDONNELL
400A SUMMIT BLVD., NE, SUITE 1200
ATLANTA, GA 30319
PHONE: (770)1987-4776
Burns & McDonnell Engineering Co. Inc.
GA ENGINEERING LICENSE: PEF000100
EXPIRATION DATE: 6/30/2025
THE REGISTRANT OF THE NEWLY APPLIED SEAL DATED 06/04/2021, ONLY ASSUMES RESPONSIBILITY FOR THE CHANGES AS INDICATED BY THE FOLLOWING REVISION(S):

(TRANS. BUS PROTECTION/GE-B90/LOCKOUT/8 CURRENT CKT./STRAIGHT BUS)

GEORGIA POWER
A SOUTHERN COMPANY

FACILITY NAME:	MCGRAU FORD TS		
TITLE:	PANEL #59 AC ELEM. DIAG. (8 CURRENT CKT) 230KV BUS #2 PRI. DIFF. GE-B90 LOCKOUT RELAY		
DRAWN: JLC	TYPE: 52	FACILITY #: 01-173	NUMBER: D- 113 / SHEET: - 001 - 02 / REV:
CHECKED: PSA	SCALE: NO SCALE		
APPROVED: AJW	BOM:		
DATE: 3/1/2005	ASC FACS:		ALT DWG NUM:

PI:	PI:	PI:	PI:	PI:	01 CP TEB 3/9/2012 PI: 1402601	REVISE DWG. TITLE AS BUS #2 PRI. DIFF. RENAME CKTS. 59-BR/004 AS 59-B/R004; 59-BR/780 AS 59B/R780; 59-AR/228 AS 59A/R228; 59-AR/448 AS 59-A/R448; 59-AR/668 AS 59-A/R668.	
					02 JCM JCM 2/5/2021 PI: 1855101	REPLACE CARTERSVILLE 230KV LINE RELAYING PANEL. UPDATE DRAWING REFERENCE.	
					03 EG SW AA 8/16/2024 PI: 1899807	ADD MCGRAU FORD TS LINE AND PCB 888 RELAYING.	

BSP-B90-D14-R0

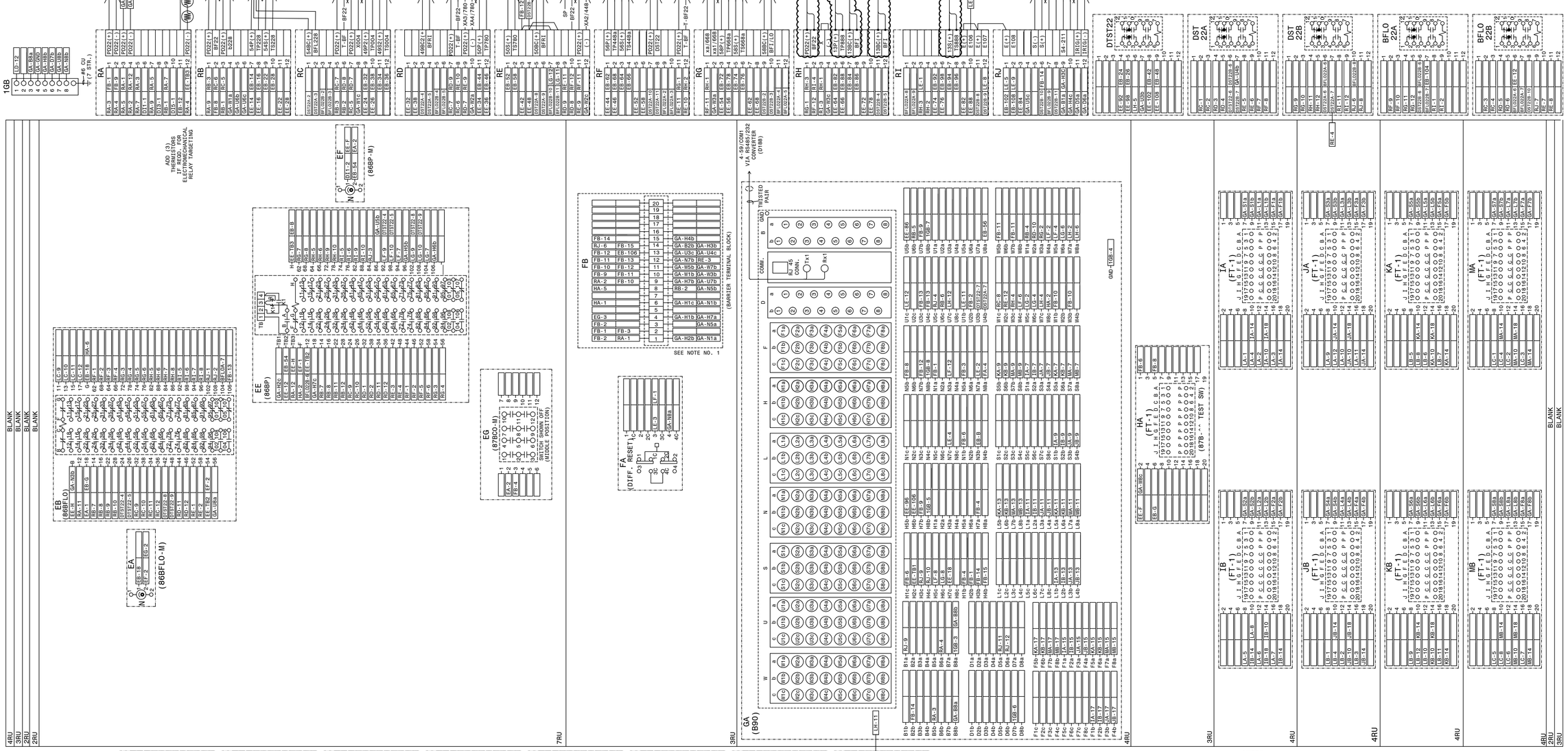

NOTES:

1. #18 GAUGE WIRE MAY BE USED FOR CONNECTIONS BETWEEN THE BARRIER TERMINAL BLOCK AND THE B90 RELAY.
2. REMOVE 86BS & 86BS-M & ASSOCIATED WIRING, RETAIN WIRING FROM DTST CONTACTS-LAND ON SAME 86BP TERMINALS 92/98 & 102/108. ADD CKTS. 59-60/C1, 59-60/C2, 59-60/C3 & 59-60/C4. LABEL BFRI AS BFI IN CKT. 58-59/C2. RENAME CKTS. 59-AR/228 AS 59-A/R228; 59-AR/448 AS 59-A/R448; 59-AR/668 AS 59-A/R668; 59-BR/004 AS 59-B/R004; 59-BR/780 AS 59-B/R780. CORRECT TERMINAL NOMENCLATURE ON B90 TERMS. "U" & "W". REVISE DWG. TITLE.

AUTOCAD ELECTRICAL
THIS DRAWING CONTAINS AUTOCAD ELECTRICAL ELEMENTS

P.I.#1899807

BURNS McDONNELL
4004 SUMMIT BLVD. NE, SUITE 1200
ATLANTA, GA 30319
PHONE: (770)587-4776
Burns & McDonnell Engineering Co. Inc.
GA ENGINEERING LICENSE: PEF000100
EXPIRATION DATE: 6/30/2026
THE REGISTRANT OF THE NEWLY APPLIED SEAL, DATED XX/XX/2024, ONLY ASSUMES RESPONSIBILITY FOR THE CHANGES AS INDICATED BY THE FOLLOWING REVISIONS:01-

	PI:		PI:	02	JLC	AJW	11/8/2006	PI:	03	CP	TEB	3/9/2012	PI: 1402601	04	JOR	GAS	5/6/2013
				FC3366 (JSH) REVISED DST RELAY LABELS.					SEE NOTE 2.					ADD CONNECTION FOR DST22A/E,PD22 TO LG-11 & LG-12 RESPECTIVELY. SHOWN FOR RECORD ONLY.			

05	BAS	JWH	USPP	3/27/2020	PI: 1616363	06	JCM	JCM	2/5/2021	PI: 1855101	07	EG	DN	AA	8/16/2024	PI: 1899807	
FC#10 (CC): UPDATED STATUS POINT NAMES.						REMOVE CABLES 54-59C1, 54-59C2, 54-59C3, 54-59C5, 54-59C6. ADD CABLES 54-59/C1, 54-59/C2, 54-59/C3, 59-A/228C1. REMOVE CABLE 54-59C4, FOR RECORD ONLY.					ADD RELAYING FOR PANEL 13 AND PCB 888 CT CONNECTION.						

GEORGIA POWER
A SOUTHERN COMPANY

FACILITY NAME:	MCGRAU FORD TS				
TITLE:	PANEL #59 WIRING DIAG (8 CURRENT CKT.) 230KV BUS NO 2 PRI. DIFF GE-B90 LOCKOUT REL.				
DRAWN: JLC	TYPE: WD	FACILITY #: 01-173	NUMBER: D- 114	SHEET: - 001 -	REV: 06
CHECKED: RDB	SCALE: NO SCALE				
APPROVED: AJW	BOM:				
DATE: 3/1/2005	ASC FACS:		ALT DWG NUM:		

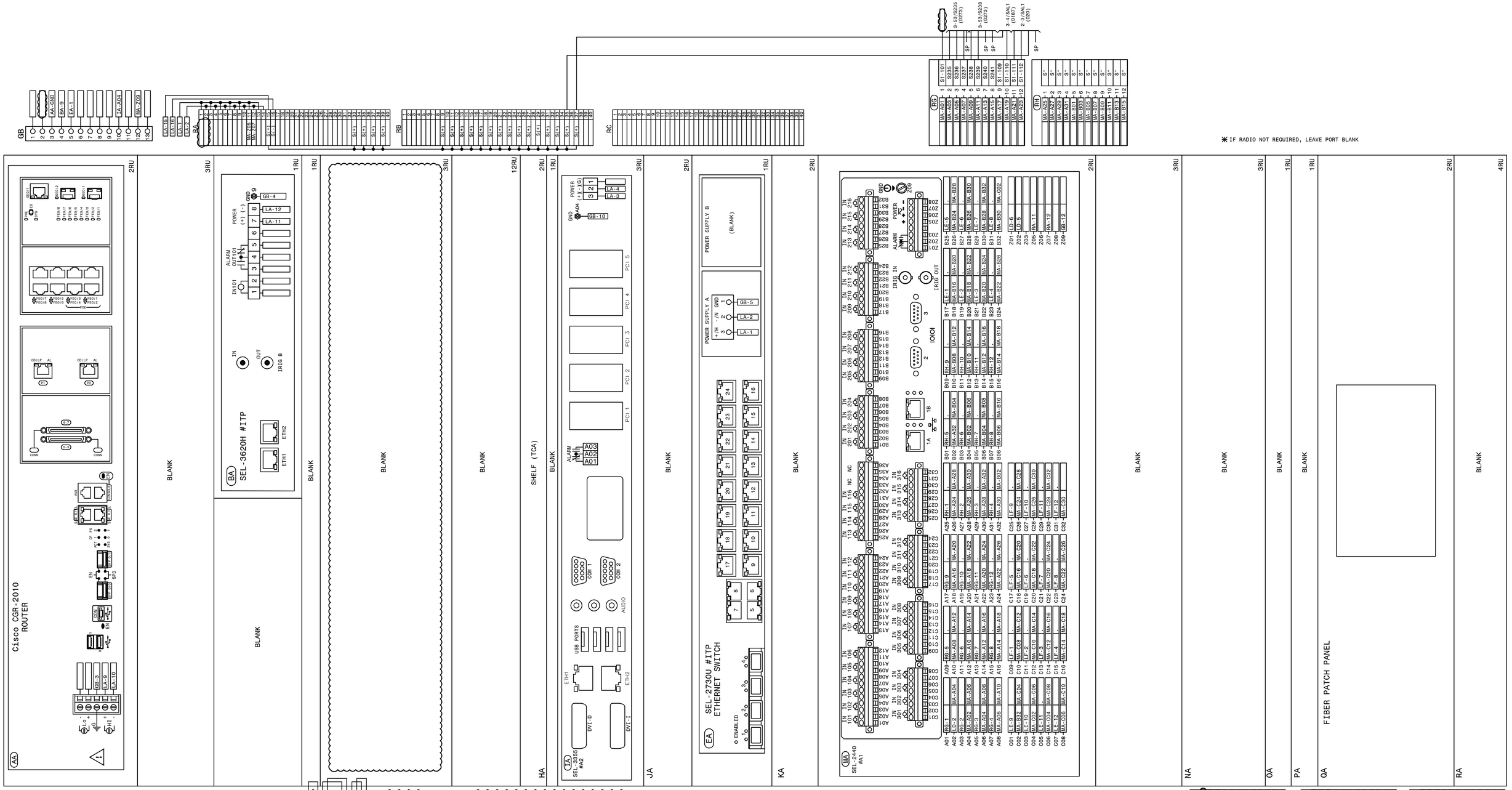

REFERENCES:

01-173-D182	PANEL #3 FRONT VIEW, IT PANEL
01-173-D186	SIA COMMUNICATION CONNECTION DIAGRAM
01-173-D187	PANEL #4 WIRING DIAGRAM TRANSMISSION SIA PANEL
01-173-D277	PANEL #3 ELEMENTARY DIAGRAM SH. 1, IT PANEL
01-173-D278	PANEL #3 ELEMENTARY DIAGRAM SH. 2, IT PANEL

AUTOCAD ELECTRICAL
THIS DRAWING CONTAINS AUTOCAD ELECTRICAL ELEMENTS

| | | |

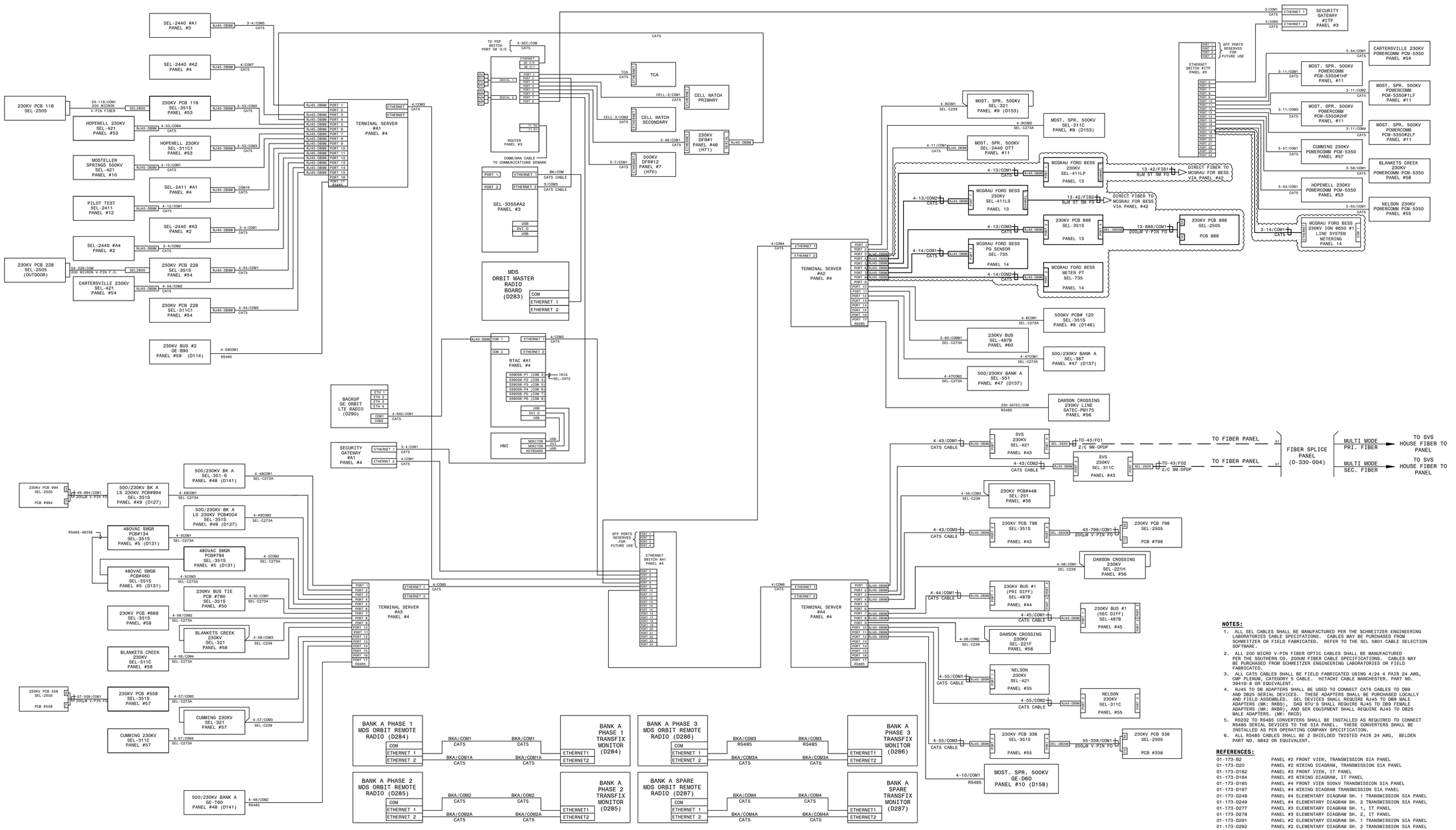

NOTES:

1. ALL SEL CABLES SHALL BE MANUFACTURED PER THE SCHWEITZER ENGINEERING LABORATORIES CABLE SPECIFICATIONS. CABLES MAY BE PURCHASED FROM SCHWEITZER OR FIELD FABRICATED. REFER TO THE SEL 5801 CABLE SELECTION SOFTWARE.
2. ALL 200 MICRO V-PIN FIBER OPTIC CABLES SHALL BE MANUFACTURED PER THE SOUTHERN CO. 200UM FIBER CABLE SPECIFICATIONS. CABLES MAY BE PURCHASED FROM SCHWEITZER ENGINEERING LABORATORIES OR FIELD FABRICATED.
3. ALL CAT5 CABLES SHALL BE FIELD FABRICATED USING 4/24 4 PAIR 24 AWG, CMP PLENUM, CATEGORY 5 CABLE. HITACHI CABLE MANCHESTER. PART NO. 39419-B OR EQUIVALENT.
4. RJ45 TO DB ADAPTERS SHALL BE USED TO CONNECT CAT5 CABLES TO DB9 AND DB25 SERIAL DEVICES. THESE ADAPTERS SHALL BE PURCHASED LOCALLY AND FIELD ASSEMBLED. SEL DEVICES SHALL REQUIRE RJ45 TO DB9 MALE ADAPTERS (MK: RKBS), DAQ RTU'S SHALL REQUIRE RJ45 TO DB9 FEMALE ADAPTERS (MK: RKBR), AND SER EQUIPMENT SHALL REQUIRE RJ45 TO DB25 MALE ADAPTERS. (MK: RKCD)
5. RS232 TO RS485 CONVERTERS SHALL BE INSTALLED AS REQUIRED TO CONNECT RS485 SERIAL DEVICES TO THE SIA PANEL. THESE CONVERTERS SHALL BE INSTALLED AS PER OPERATING COMPANY SPECIFICATION.
6. ALL RS485 CABLES SHALL BE 2 SHIELDED TWISTED PAIR 24 AWG, BELDEN PART NO. 9842 OR EQUIVALENT.

REFERENCES:

01-173-B2	PANEL #2 FRONT VIEW, TRANSMISSION SIA PANEL
01-173-D20	PANEL #2 WIRING DIAGRAM, TRANSMISSION SIA PANEL
01-173-D182	PANEL #3 FRONT VIEW, IT PANEL
01-173-D184	PANEL #3 WIRING DIAGRAM, IT PANEL
01-173-D185	PANEL #4 FRONT VIEW 500kV TRANSMISSION SIA PANEL
01-173-D187	PANEL #4 WIRING DIAGRAM TRANSMISSION SIA PANEL
01-173-D248	PANEL #4 ELEMENTARY DIAGRAM SH. 1 TRANSMISSION SIA PANEL
01-173-D249	PANEL #4 ELEMENTARY DIAGRAM SH. 2 TRANSMISSION SIA PANEL
01-173-D277	PANEL #3 ELEMENTARY DIAGRAM SH. 1, IT PANEL
01-173-D278	PANEL #3 ELEMENTARY DIAGRAM SH. 2, IT PANEL
01-173-D291	PANEL #2 ELEMENTARY DIAGRAM SH. 1 TRANSMISSION SIA PANEL
01-173-D292	PANEL #2 ELEMENTARY DIAGRAM SH. 2 TRANSMISSION SIA PANEL

AUTOCAD ELECTRICAL
THIS DRAWING CONTAINS AUTOCAD ELECTRICAL ELEMENTS

P.I.#1899807

BURNS McDONNELL
4004 SUMMIT BLVD., NE, SUITE 1200
ATLANTA, GA 30319
PHONE: (770)587-4776
Burns & McDonnell Engineering Co. Inc.
GA ENGINEERING LICENSE: PEF000100
EXPIRATION DATE: 6/30/2026
THE REGISTRANT OF THE NEWLY APPLIED SEAL, DATED XX/XX/2024, ONLY ASSUMES RESPONSIBILITY FOR THE CHANGES AS INDICATED BY THE FOLLOWING REVISIONS(s):

08	BAH JWH	USPP	9/21/2021	PI:FC183304	MOVED GE RELAY COMMUNICATIONS FROM ETHERNET TO SERIAL, SHOWN FOR RECORD ONLY.
09	BPE BPE	BPE	05/31/2023	PI: 1930501	UPDATE CONNECTIONS FOR NEW PANELS #44 & #45 BUS #1 DIFFERENTIALS AND #55 NELSON LINE. ADD CONNECTIONS FOR NEW PANEL #43 SVS LINE. AS SHOWN. PANEL #4, SWITCH #A2 REMOVED, FOR RECORD ONLY.
10	BPE BPE	BPE	08/01/2023	PI: 1930501	ADD SEL-2505 ANNUNCIATORS TO PCB 994 AND PCB 558 AS SHOWN.
11	BPE BPE	BPE	10/12/2023	PI: 1930501	UPDATED SVC TEXT TO SVS AS SHOWN FOR ACCURACY IN DESCRIPTION OF NEW SVS SUBSTATION LABEL.
12	BPE BPE	BPE	2/28/2024	PI: 1943901	UPDATE DRAWING PER FIELD CHANGES AS SHOW.
13	RJH RCL	USPP	4/1/2024	PI: 2014906	ADD PCM-5350 INPUTS FROM PANELS 11, 53, 57, AND 58.
14	TK DP	DP	07/26/2024	PI:	REMOVED SEL-3555 COMMUNICATION CONNECTION PER AS-BUILT MARKUPS.
15	EG SW	AA	9/23/2024	PI: 1899807	ADD RELAYS FOR PANEL 13 AND 14.

GEORGIA POWER
A SOUTHERN COMPANY

DRAWN:	AJW	FACILITY NAME:	MCGRAU FORD TS
CHECKED:	AJW	TITLE:	SIA COMMUNICATION CONNECTION DIAGRAM
APPROVED:	AJW	TYPE: SIA	FACILITY #: 01-173
DATE:	7/31/2006	SCALE: N.T.S.	NUMBER: D-186 SHEET: - 001 - REV: 14
		BOM:	
		ASC FACS:	ALT DWG NUM:

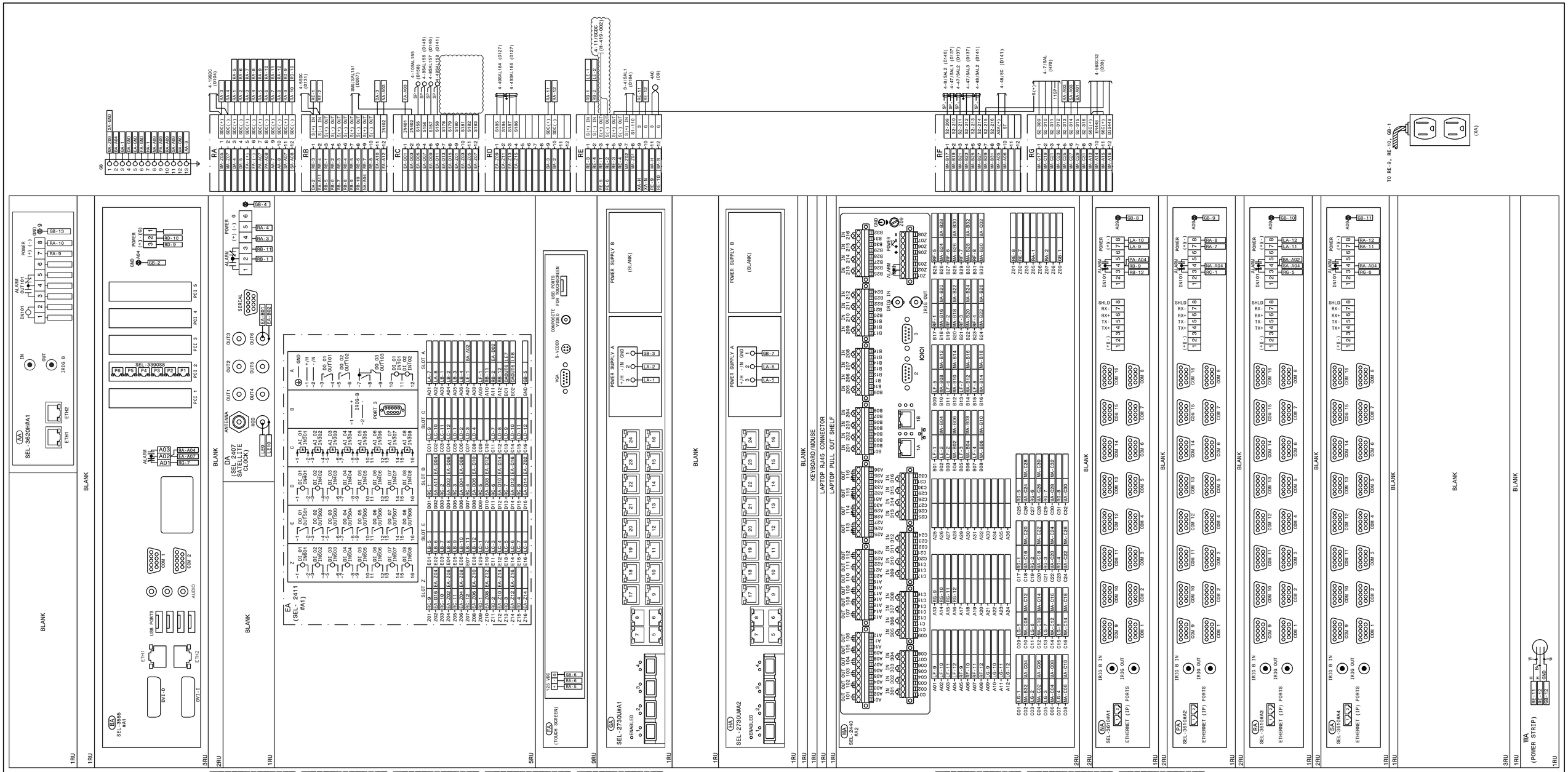

REFERENCES:

01-173-D184	PANEL #3 WIRING DIAGRAM, IT PANEL
01-173-D185	PANEL #4 FRONT VIEW 500kV TRANSMISSION SIA PANEL
01-173-D186	SIA COMMUNICATION CONN. DIAGRAM
01-173-D248	ELEMENTARY DIAGRAM SH. 1 TRANSMISSION SIA PANEL
01-173-D249	ELEMENTARY DIAGRAM SH. 2 TRANSMISSION SIA PANEL

AUTOCAD ELECTRICAL
THIS DRAWING CONTAINS AUTOCAD ELECTRICAL ELEMENTS

05	CSM	DML	USP	12/2/2013	PI: 1451605	06	CSM	DML	USP	3/5/2015	PI: 1451605	07	CSM	DML	10/4/2015	PI: 1451736	08
REPLACE SEL-3351 WITH A SEL-3354. CONTACT EDUARDO SANTIAGO FOR NEW SEL-3354. RELOCATED TERMINAL BLOCKS FOR RECORD ONLY.						REMOVE SEL-2032#1, SEL-2032#2, HMI, KEYBOARD/MOUSE, AND SEL-3354. RELOCATE SEL-3610#A1 FROM PANEL #3 AS SHOWN. INSTALL SEL-3610#A2, SEL-3610#A3, SEL-3610#A4, ETHERNET SWITCH #A1, SEL-2440#A2, SEL-3355#A1, AND SEL-3355#A2 AS SHOWN.						REMOVE GARRETTCOM ETHERNET SWITCHES. INSTALL SEL-2730UHA1, SEL-2730UHA2, AND SEL-3390S8 EXPANSION CARDS AS SHOWN. FIELD CHANGES SHOWN FOR RECORD ONLY.					

09	JBD	PSA	11/6/2016	PI: 1651902	10	RC	JWH	USPOWER	7/11/2019	PI: 1616363	11	BAS	JWH	USPP	3/27/2020	PI: 1616363	12
REMOVE CABLE 4-10/SAL2.					CONVERT SEL-3355#A1 TO SEL-3555#A1 (RTAC). REMOVE RKDD (SEL-3355#A2) AND (1)RGWU. INSTALL (1)RGWT, (1)RGWV AND (1)RLCU. UPDATED DRAWING REFERENCE D184 FOR RECORD ONLY.						FC#10 (CC): ADDED CABLE 4-56SC12.						ADD CABLES 4-11/SCDC AND 4-11/SAL1. REMOVE CABLES 4-11/SC AND 4-11SAL178.

GEORGIA POWER A SOUTHERN COMPANY	FACILITY NAME: MCGRAU FORD TS				
	TITLE: PANEL #4 WIRING DIAGRAM TRANSMISSION SIA PANEL				
DRAWN: AJW	TYPE: WD	FACILITY #: 01-173	D-	NUMBER: 187	SHEET: - 001 - REV: 12
CHECKED: AJW	SCALE: N.T.S.				
APPROVED: AJW	BOM:				
DATE: 7/31/2006	ASC FACS:			ALT DWG NUM:	

ITEM	QTY	DESCRIPTION
A2	1	PRIMARY CHASSIS 16A, 64E
B2	1	ADD-ON CHASSIS 16A,64E
C2	1	ADD-ON CHASSIS 16A,64E
A4	1	KEYBOARD RACK MOUNT
A6	1	MONITOR
A7	1	ALARM OUTPUT MODULE
A9	1	MODEM- INTERNAL TO A12
A10	0	GPS RECEIVER CLOCK
A11	0	TELCO SWITCH-SUPPLIED BY CUSTOMER
A12	1	COMPUTER
IL	1	INTERIOR LIGHT
CR	2	CONVENIENCE RECEPTACLE
LS	1	LIGHT SWITCH
D2	1	ADD-ON CHASSIS 16A,64E

FOR REFERENCE

FOR REFERENCE

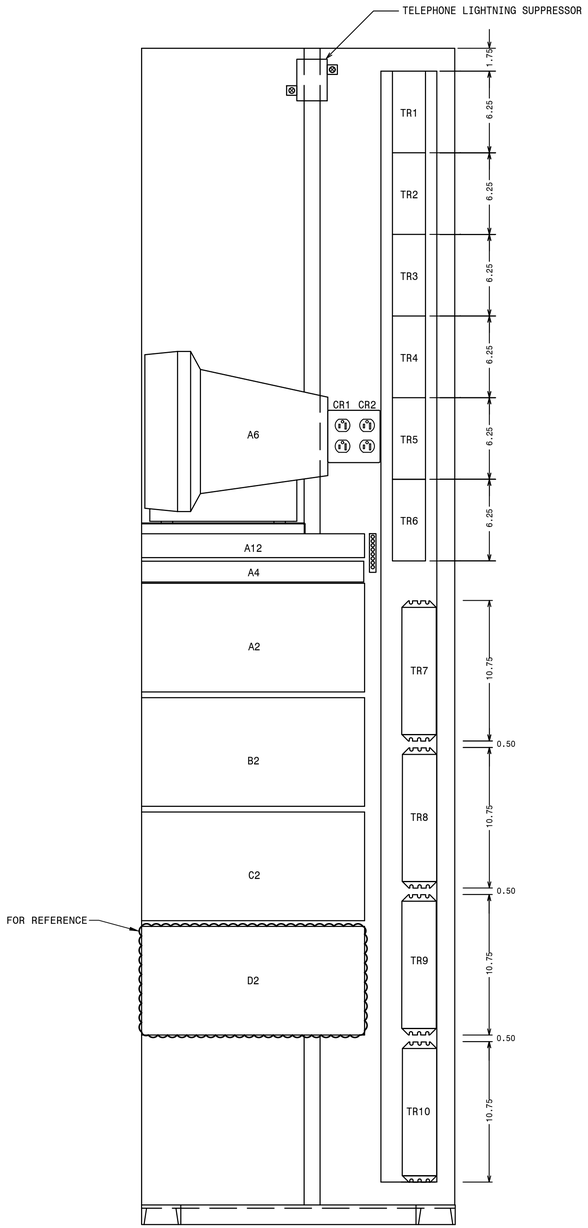

SECTION BB

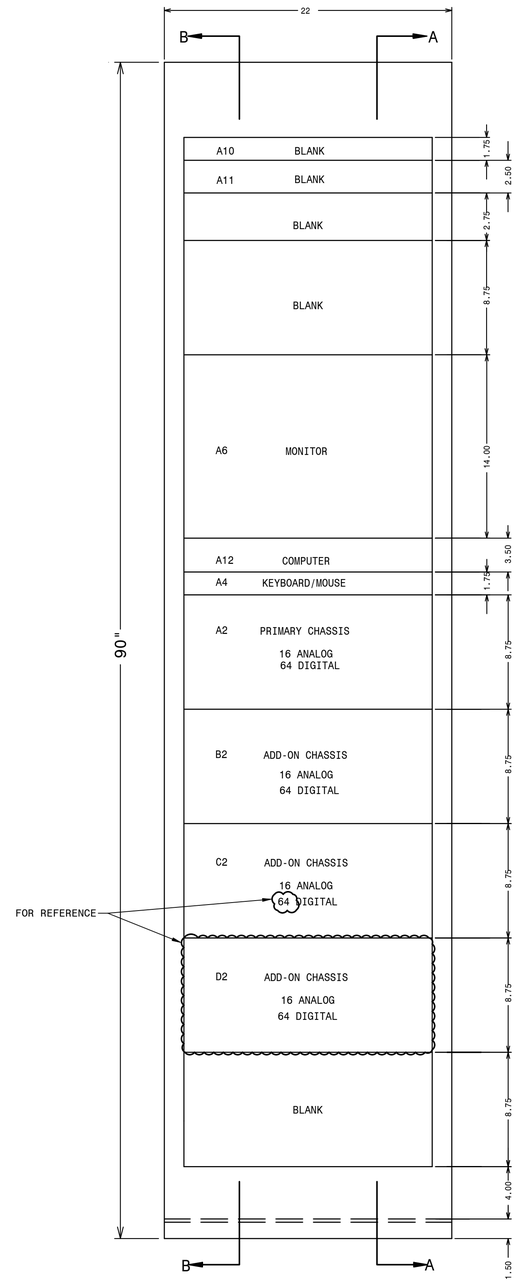

FRONT VIEW

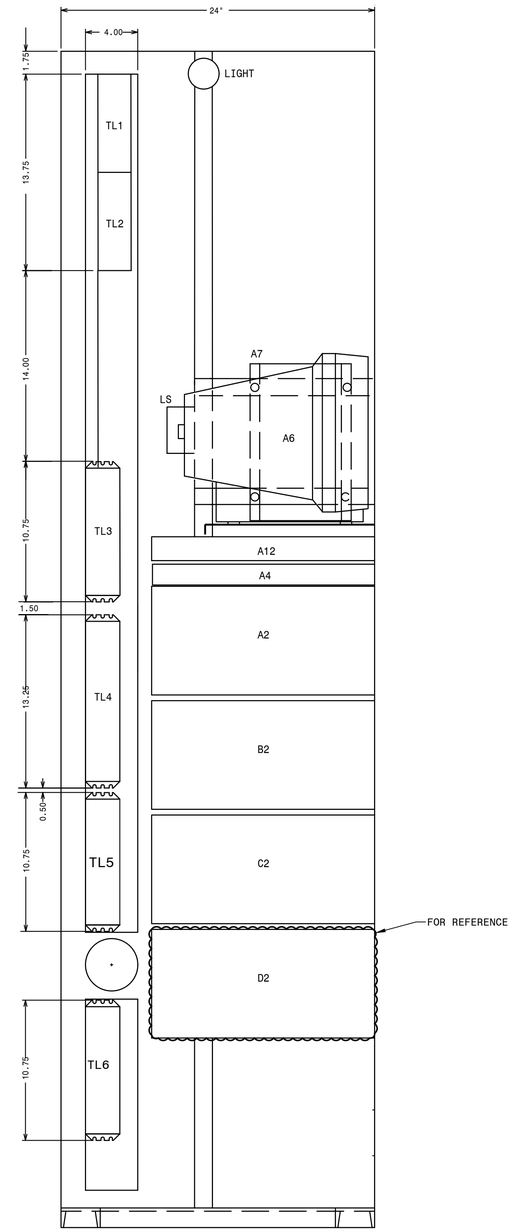

SECTION AA

MK: RHSV

NOTES:

1. UTILITY SYSTEMS INC. MODEL 2002 DIGITAL FAULT RECORDER GPC P.O. #01965570000 IN 2005.
2. ADD-ON CHASSIS D2 WAS A 0 ANALOG, 64 EVENT POINT CHASSIS AND HAS BEEN REPLACED WITH A 16 ANALOG, 64 EVENT POINT CHASSIS BY THE FIELD. SHOWN FOR REFERENCE.
3. FOR THE NEW 16A, 64E CHASIS, ONE 20 POLE AND ONE 12 POLE STATES TERMINAL BLOCK HAVE BEEN INSTALLED UNDER CHASSIS D2 BY THE FIELD.

REFERENCES:	REFERENCES:
01-173-D132	DFR #1 CHANNEL AND POINT ASSIGNMENT
01-173-H71	PANEL #46 CONNECTION DIAG.-DFR #2
01-173-D206	PANEL#46, DFR CAB. #2 REAR VIEW

P.I.#1899807

BURNS McDONNELL
4004 SUMMIT BLVD., NE, SUITE 1200
ATLANTA, GA 30319
PHONE: (770)587-4776
Burns & McDonnell Engineering Co. Inc.
GA COA:#000000 EXPIRATION DATE:6/30/2100
EXPIRATION DATE:6/30/2036
THE REGISTRANT OF THE NEWLY APPLIED SEAL, DATED XX/XX/2024, ONLY ASSUMES RESPONSIBILITY FOR THE CHANGES AS INDICATED BY THE FOLLOWING REVISIONS:01,

PI:	PI:	PI:	PI:	PI:	PI:	PI:

01	EG	SW	AA	9/16/2024 PI: 1899807

SEE NOTES 2 AND 3.

GEORGIA POWER
A SOUTHERN COMPANY

DRAWN:	JLC
CHECKED:	AJW
APPROVED:	
DATE:	05-30-2005

FACILITY NAME: MCGRAU FORD TS

TITLE: DIGITAL FAULT REC. #1 CABINET (230KV) F.V. AND SECTIONS, PANEL #46

TYPE:	FV	FACILITY #:	NUMBER:	SHEET:	REV:
SCALE:	N.T.S.	01-173	D- 205	- 001	- 00
BOM:					

ASC FACS:

ALT DWG NUM:

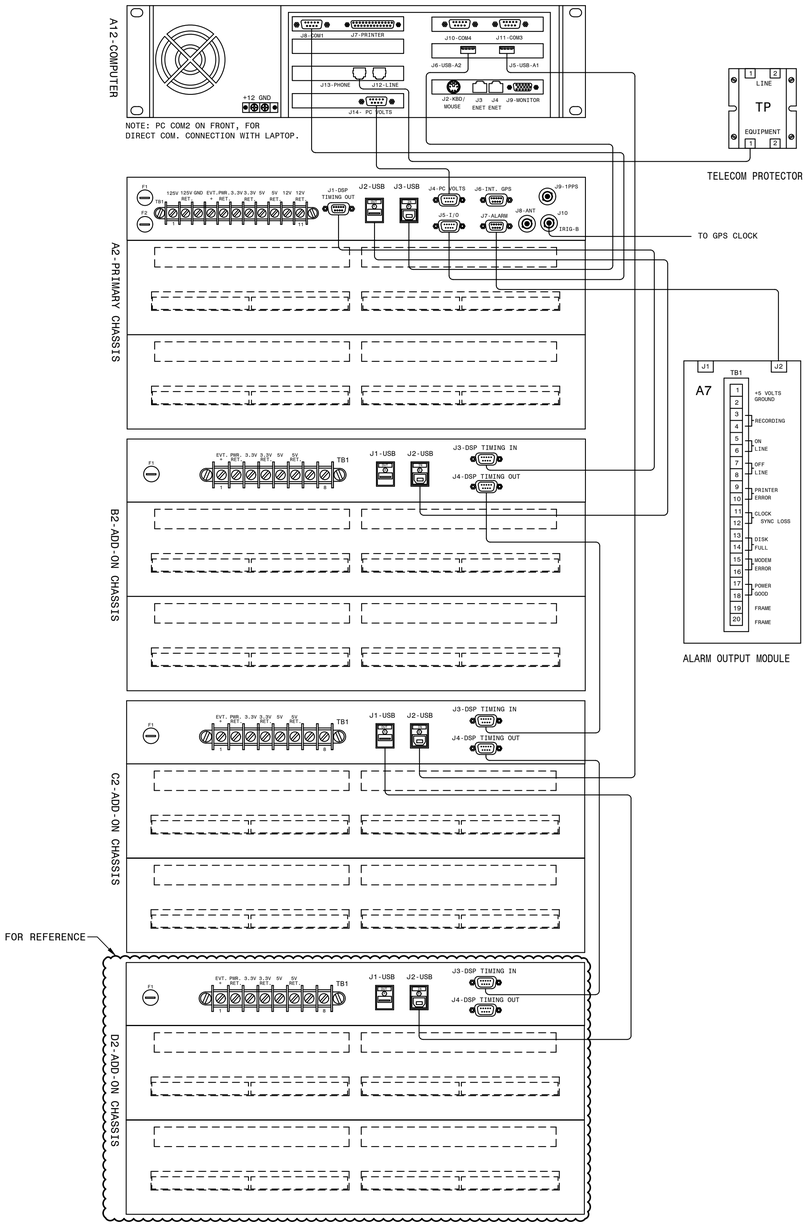

INTERCONNECTING CABLES LIST
A12-J6 TO A2-J3 A12 COMPUTER USB (A2) TO PRIMARY CHASSIS USB (B)
A12-J5 TO A2-J2 A12 COMPUTER USB (A1) TO PRIMARY CHASSIS USB (B)
A12-J14 TO A2-J4 COMPUTER PC VOLTS TO PRIMARY CHASSIS
A12-J8 TO A2-J5 COMPUTER COM1 TO PRIMARY CHASSIS I/O PORT
A12-J13 TO A11 PORT 1-8 COMPUTER J13 TO A11 PORT DESIGNATION PER STATION
A12-J11 TO A2-J6 COMPUTER COM3 TO PRIMARY CHASSIS INT. GPS
A2-J1 TO B2-J3 A2 CHASSIS DSP TIMING (OUT) TO B2 CHASSIS DSP TIMING (IN)
A2-J2 TO B2-J2 A2 CHASSIS USB (A) TO B2 CHASSIS USB (B)
A2-J8 TO A10-IRIG-B MODULATED IRIG-B CLOCK SOURCE
A2-J7 TO A7-J2 ALARM OUTPUT MODULE
B2-J1 TO C2-J2 B2 CHASSIS USB (A) TO C2 CHASSIS USB (B)
B2-J4 TO C2-J3 B2 CHASSIS DSP TIMIMG (OUT) TO C2 CHASSIS DSP TIMING (IN)
C2-J1 TO D2-J2 C2 CHASSIS USB (A) TO D2 CHASSIS USB (B)
C2-J4 TO D2-J3 C2 CHASSIS DSP TIMIMG (OUT) TO D2 CHASSIS DSP TIMING (IN)

FOR REFERENCE

ITEM	QTY	DESCRIPTION
A2	1	PRIMARY CHASSIS 16A, 64E
B2	1	ADD-ON CHASSIS 16A, 64E
C2	1	ADD-ON CHASSIS 16A, 64E
D2	1	ADD-ON CHASSIS 16A, 64E
A6	1	MONITOR/KEYBOARD
A7	1	ALARM OUTPUT MODULE
A9	1	MODEM- INTERNAL TO A12
A12	1	COMPUTER
IL	1	INTERIOR LIGHT
CR	2	CONVENIENCE RECEPTACLE
LS	1	LIGHT SWITCH
TP	1	TELECOM PROTECTOR

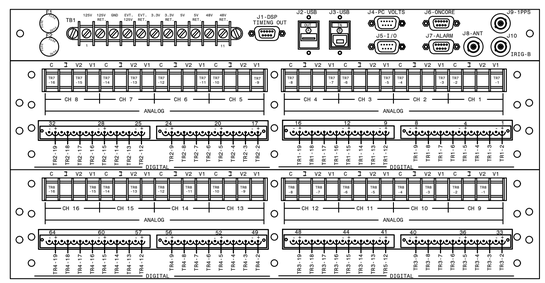

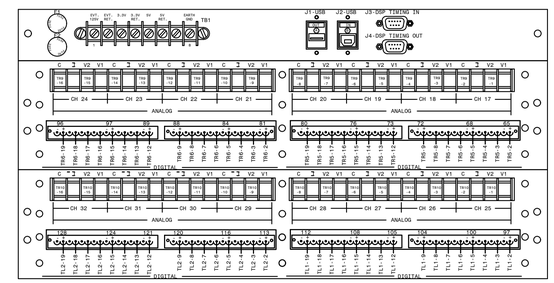

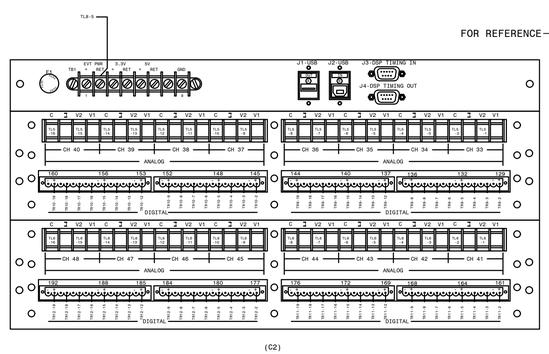

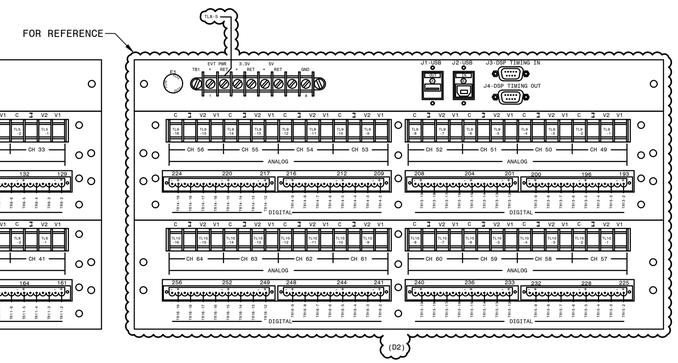

NOTES:

1. USE V1 40.01 TO 400V FULL SCALE.
2. USE V2 1V TO 40V FULL SCALE
3. WHEN "V2" INPUT IS USED, JUMPER MUST BE CONNECTED BETWEEN V1 & V2 OF SAME CHANNEL.
4. F1 = MAIN POWER FUSE
5. F2 = EVENT POWER FUSE
6. ALL WIRES 14AWG SIS UNLESS OTHERWISE SPECIFIED.
7. ALL EVENT (DIGITAL) CHANNELS HAVE COMMON RETURN. JUMPERS INSIDE CHASSIS TIE RETURNS TOGETHER.
8. ADD-ON CHASSIS D2 WAS A 0 ANALOG, 64 EVENT POINT CHASSIS AND HAS BEEN REPLACED WITH A 16 ANALOG, 64 EVENT POINT CHASSIS BY THE FIELD. SHOWN FOR REFERNECE. FIELD TO VERIFY THE CONNECTIONS.

REFERENCES:

01-173-D205 DFR #1 CABINET F.V. & SECTIONS, PANEL #46
01-173-D132 DFR #1 CHANNEL & EVENT ASSIGNMENTS, PANEL #46
01-173-H71 DFR #1 CONNECTION DIAGRAM, PANEL #46

P.I.#1899807

BURNS McDONNELL
4004 SUMMIT BLVD., NE, SUITE 1200
ATLANTA, GA 30319
PHONE: (770)1687-4776
Burns & McDonnell Engineering Co, Inc.
GA ENGINEERING LICENSE: PEF000100
EXPIRATION DATE: 6/30/2026
THE REGISTRANT OF THE NEWLY APPLIED SEAL DATED 00/00/0000, ONLY ASSUMES RESPONSIBILITY FOR THE CHANGES AS INDICATED BY THE FOLLOWING REVISIONS(s):

PI:	PI:	PI:	PI:	PI:	PI:	PI:	PI:

01	EG	SW	AA	9/16/2024	PI: 1899807

SEE NOTE 8.

GEORGIA POWER
A SOUTHERN COMPANY

DRAWN: JLC	FACILITY NAME: MCGRAU FORD TS				
CHECKED: AJW	TITLE: DIGITAL FAULT RECORDER #1 CABINET REAR VIEW, PANEL #46 (230KV)				
APPROVED:	TYPE: 82	FACILITY #: 01-173	NUMBER: D- 206	SHEET: - 001 -	REV: -
DATE: 08/25/2005	SCALE: N.T.S.				
	BOM:				
	ASC FACS:				ALT DWG NUM:

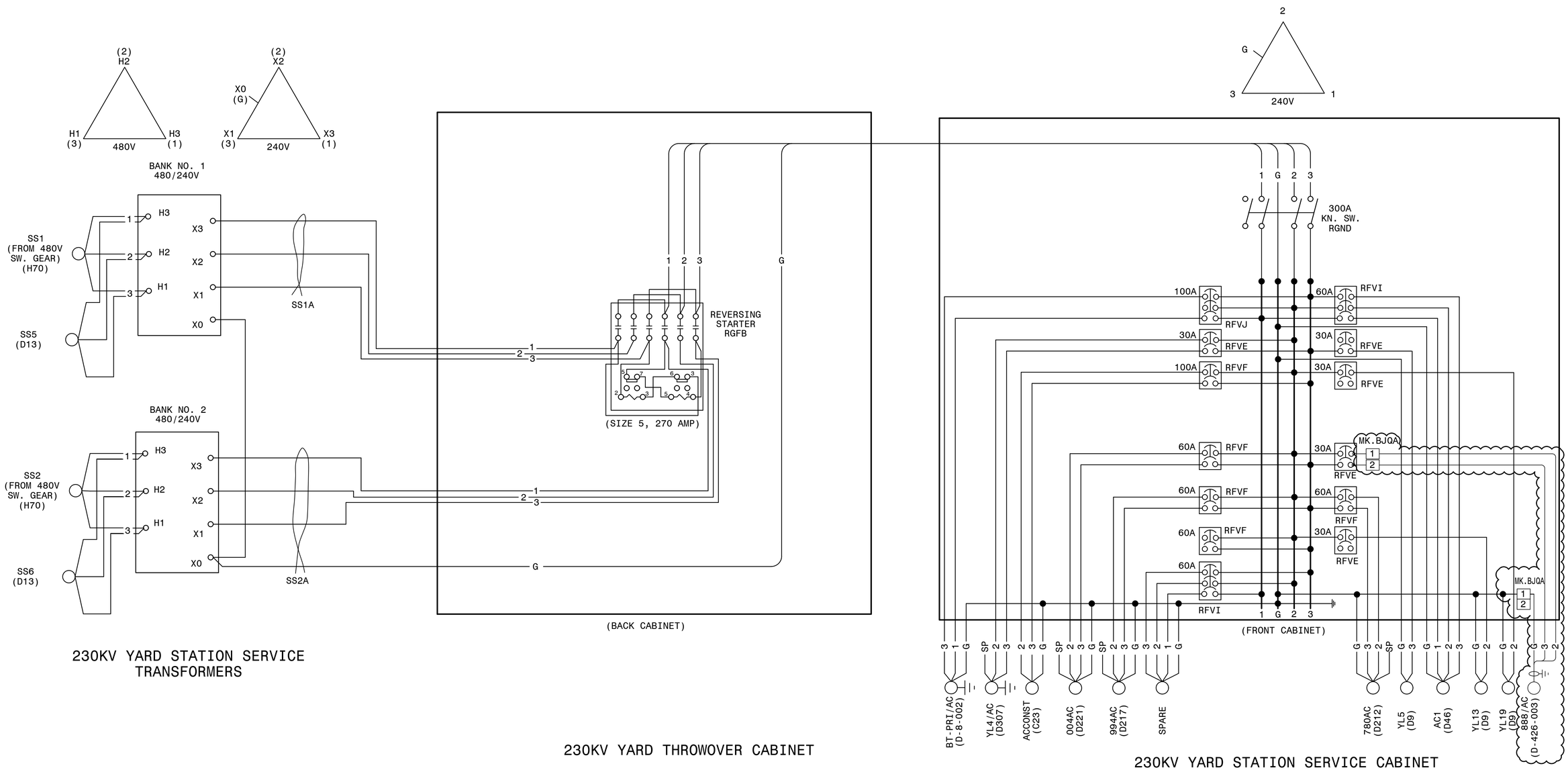

NOTES:

1. POWER TERMINAL BLOCK MK. BJQA TO BE LOCATED AND INSTALLED BY THE FIELD, AS REQUIRED.
2. CABLES INSTALLED FROM POWER TERMINAL BLOCK MK. BJQA TO BLOCK TERMINAL MK. BJPE TO BE #10.

AUTOCAD ELECTRICAL

THIS DRAWING CONTAINS AUTOCAD ELECTRICAL ELEMENTS

P.I.#1899807

BURNS McDONNELL
4004 SUMMIT BLVD., NE., SUITE 1200
ATLANTA, GA 30319
PHONE: (770)587-4776

Burns & McDonnell Engineering Co. Inc.
GA ENGINEERING LICENSE: PEF000100
EXPIRATION DATE: 6/30/2026

THE REGISTRANT OF THE NEWLY APPLIED SEAL, DATED XX/XX/XXX, ONLY ASSUMES RESPONSIBILITY FOR THE CHANGES AS INDICATED BY THE FOLLOWING REVISIONS: 04.

			PI:				PI:				PI:				PI:	01	JLC	AJW	09-08-05	PI:
CHANGED TWO 60A 3-POLE BREAKERS TO 2-POLE. RE-ALIGNED TWO 30A BREAKERS. ADDED CABLES SS5 & SS6.																			
02	BPE	BPE	BPE	06/10/2022	PI: 1609401														
ADDED CIRCUIT YL4/AC FOR AC SUPPLY AT PERIMETER YARD LIGHT JUNCTION BOX #4. REMOVED RECEPTACLES FROM STATION SERVICE CABINET FOR RECORD ONLY.																			
03	BPE	BPE	BPE	08/01/2023	PI: 1930501														
ADD CIRCUIT FOR BATT. TRAILER CONNECTION IN CONTROL HOUSE.																			
04	EG	SW	AA	12/5/2024	PI: 1899807														
INSTALL CABLE 888/AC.																			

GEORGIA POWER
A SOUTHERN COMPANY

DRAWN:	JLC	FACILITY NAME:	MCGRAU FORD TS		
CHECKED:	RLJ	TITLE:	230KV YARD STATION SERVICE & THROWOVER CABINET #1		
APPROVED:	AJW	TYPE: WD	FACILITY #: 01-173	NUMBER: D- 215	SHEET: - 001 -	REV: 03
DATE:	07-18-05	SCALE: NTS			
		BOM:			
		ASC FACS:		ALT DWG NUM:	

LABEL DETAILS

LABEL NO.	FIRST LINE	SECOND LINE	THIRD LINE	FOURTH LINE	FIFTH LINE
1	PANEL NO. 60		DWG. NO. 01-173-D263		
2	TRIP CIRCUIT MONITOR	86BS-22 RELAY			
3	SECONDARY AUX. TRIPPING RELAY	86BS-22	TRIPS-004, 228, 448, 668, 780, 888		
4					
5	87BS-22 CUTOUT SWITCH	230KV BUS NO.2	DIFFERENTIAL		
6	SEL-487B RELAY	230KV BUS NO. 2	DIFFERENTIAL RELAY		
7	SEE DETAIL A				
8	SEE DETAIL B				
9	SEE DETAIL C				
10	SEE DETAIL D				
11	SEE DETAIL E				
12	SEE DETAIL F				
13	SEE DETAIL G				
14	SEE DETAIL H				

QTY.	MK.	SES ITEM	DESCRIPTION	REMARKS
1	AA	RHCL	SWITCHBOARD PANEL, 49 R.U. SPACES 27" X 90" X 21"	DWG. PAN-CONST-D1
		RHCN	SWITCHBOARD ANGLE FRAME 27" X 90" X 21"	DWG. PAN-CONST-D2
1	AB	RGIJ	INDICATING LIGHT, NEON, ET-17, COMPLETE	
1	AC	RGQE	REL-AUX 2NO-2NC/DECK 1O DECK, LOR/ER, 30-140VDC	EC #7840DD
1	AD	RHHS	SWITCH, TOGGLE, 4PDT	MICROSWITCH #4TL1-3
1	AF	RICJ	REL-CURRENT DIFF. TYPE SEL-487B, MICROPROC. BASED	SEL 0487B045X2XEEXXX7
3	AG	RGWU	RACK PANEL, 2 R.U. HIGH, BLANK	DWG. PAN-CONST-D1
2	AH	RGWV	RACK PANEL, 3 R.U. HIGH, BLANK	DWG. PAN-CONST-D1
2	AI	RGWW	RACK PANEL, 4 R.U. HIGH, BLANK	DWG. PAN-CONST-D1
3	AJ	RHUC	TEST BLOCK RACK MOUNT SYSTEM, 2-10P	MEGGER 194R-220G-ST OR ABB SS4G014NNNO14BX00N
1	AK	RGWZ	RACK PANEL, 7 R.U. HIGH, PUNCHED & DRILLED	DWG. PAN-CONST-D1
1	AM	RHUA	SWITCH, REL. TEST ASSY., 2-10 POLE W/HOLE PUNCHED FOR CO SWITCH	MEGGER #A193RG-220L-ST OR ABB #
8	AO	BJPE	BLOCK TERMINAL, 12 POLE, SLIDING LINK	
1	AQ	BAVD	GROUND BAR, COPPER	
1	AR	FUPH	FUSE BLOCK-THREE POLE 1-30 AMP, 250 VOLT	
3	AS	RFVM	FUSE CARTRIDGE, SINGLE ELEMENT, 250V, 6 AMP	

DETAIL I
(CONFIGURABLE LABEL)

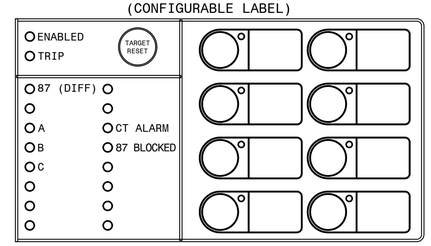

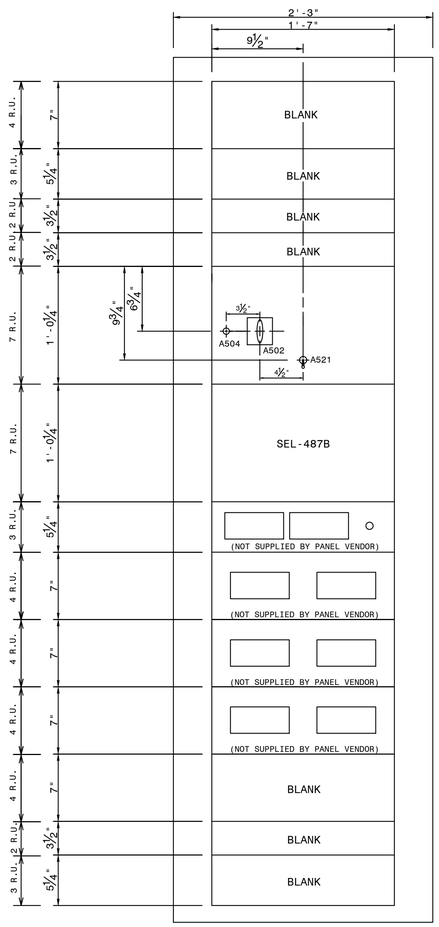

FRONT PANEL
(PUNCH MARKS)

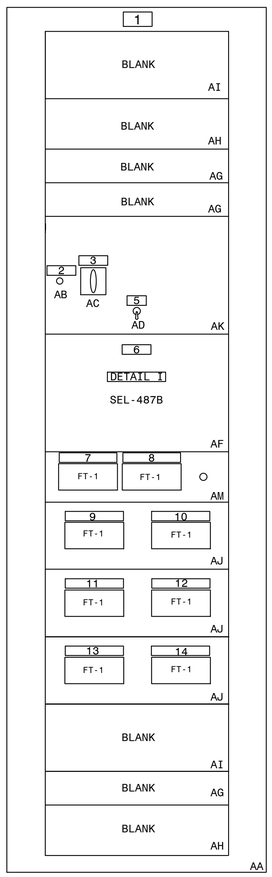

FRONT PANEL
(NAMEPLATES AND MATERIAL MARKS)

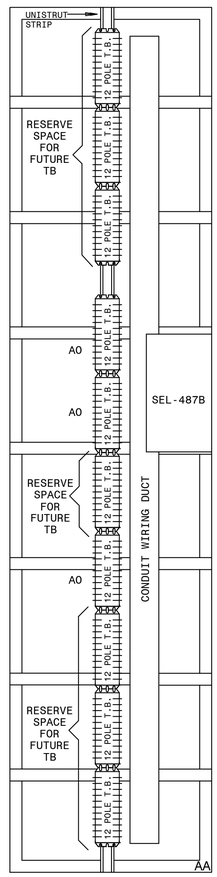

LEFT REAR

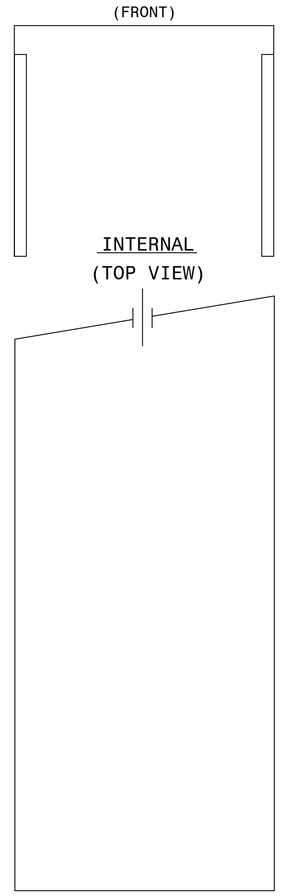

FRONT PANEL
(INTERNAL PANEL REAR VIEW)

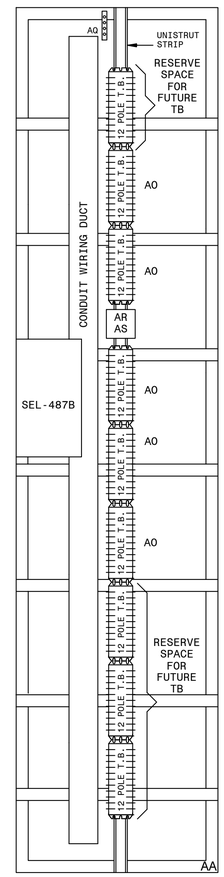

RIGHT REAR

DETAIL A

87BS-22 TEST SWITCH

SEC. TRIP 86BS22		BF TRIP 22		004 SEC TRIP	004 BFI/ LO	228 SEC TRIP	228 BFI/ LO	448 SEC TRIP	448 BFI/ LO
A	B	C	D	E	F	G	H	I	J

DETAIL B

87BS-22 TEST SWITCH

668 SEC TRIP	668 BFI/ LO	780 SEC TRIP	780 BFI/ LO	FUT. SEC TRIP	FUT. BFI/ LO	888 SEC TRIP			
A	B	C	D	E	F	G	H	I	J

DETAIL C

487B TEST SWITCH (004)

V1	V2	V3	C1	C11	C2	C22	C3	C33	VG
A	B	C	D	E	F	G	H	I	J

DETAIL D

487B TEST SWITCH (228)

			C1	C11	C2	C22	C3	C33	
A	B	C	D	E	F	G	H	I	J

DETAIL E

487B TEST SWITCH (448)

			C1	C11	C2	C22	C3	C33	
A	B	C	D	E	F	G	H	I	J

DETAIL F

487B TEST SWITCH (668)

			C1	C11	C2	C22	C3	C33	
A	B	C	D	E	F	G	H	I	J

DETAIL G

487B TEST SWITCH (780)

			C1	C11	C2	C22	C3	C33	
A	B	C	D	E	F	G	H	I	J

DETAIL H

487B TEST SWITCH (FUT.)

			C1	C11	C2	C22	C3	C33	
A	B	C	D	E	F	G	H	I	J

NOTES:

1. CABLE ENTRY IS FROM TOP OF PANEL.

REFERENCES:

01-173-D264	PANEL #60 ELEMENTARY DIAG.
01-173-D265	PANEL #60 WIRING DIAGRAM
01-173-D266	PANEL #60 LOGIC DIAGRAM (SEL-487B)
PAN-CONST-D1	CONSTRUCTION DETAILS
PAN-CONST-D2	CONSTRUCTION DETAILS

BSP-87BS-D-1-001-0

(TRANS. BUS PROTECTION/SEL-487B/SECONDARY/LOCKOUT/STRAIGHT BUS)

P.I.#1899807

BURNS McDONNELL
4004 SUMMIT BLVD., NE, SUITE 1200
ATLANTA, GA 30319
PHONE: (770)387-4776
Burns & McDonnell Engineering Co, Inc.
GA ENGINEERING LICENSE: PEF002100
EXPIRATION DATE: 6/30/2026

THE REGISTRANT OF THE NEWLY APPLIED SEAL DATED 00/00/0000, ONLY ASSUMES RESPONSIBILITY FOR THE CHANGES AS INDICATED BY THE FOLLOWING INITIALS/DATE:

01	EG	SW	AA	8/20/2024	PI:1899807

ADD PCB 888 SECONDARY TRIP TO DETAIL B.

PI: PI: PI: PI: PI: PI: PI:

GEORGIA POWER
A SOUTHERN COMPANY

DRAWN:	CP
CHECKED:	TEB
APPROVED:	1402601
DATE:	2/24/2012

FACILITY NAME: MCGRAU FORD TS

TITLE: PANEL #60 FRONT VIEW & NAMEPLATES (6 CURR. CKT.) 230KV BUS NO. 2 SEC. DIFF. (SEL487B) REL.

TYPE:	FV	FACILITY #:	NUMBER:	SHEET:	REV:
SCALE:	1 1/2"=1'-0"	01-173	D 263	- 001 -	0
BOM:					

ASC FACS:

ALT DWG NUM:

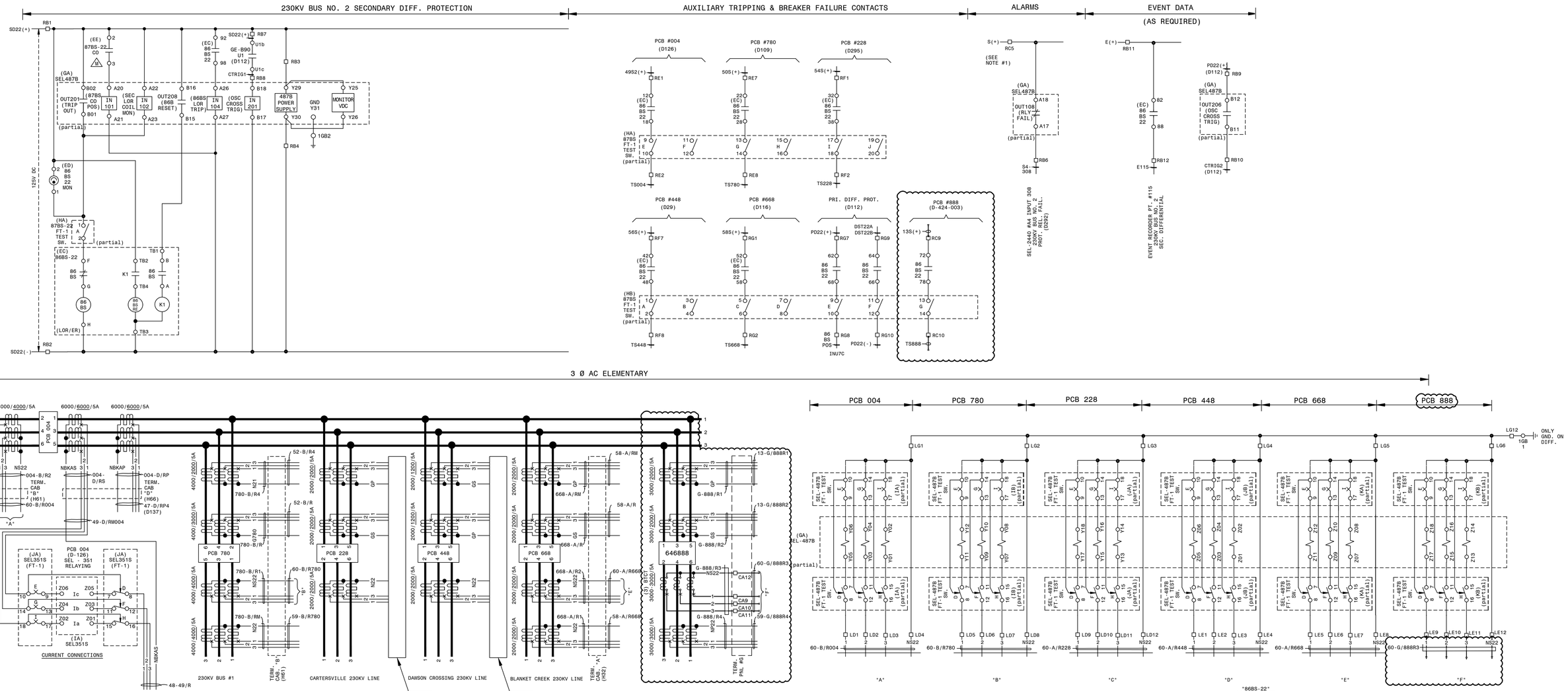

87BS-22 CO
TOGGLE SWITCH
MICRO SWITCH
MS24525-23

CONTACTS		MAINTAINED POSITIONS UP: REMOTE CLOSED	DOWN: LOCAL OPEN
3 4	1-2		X
	2-3	X	
5 6	4-5		X
	5-6	X	
7 8	7-8		X
	8-9	X	
9 10	10-11		X
	11-12	X	

"86BS-22"
LOCKER RELAY

DECK	CONTACTS	POSITION TRIP	RESET
1	11 13		X
	12 18	X	
	15 17		X
	14 16	X	
2	21 23		X
	22 28	X	
	25 27		X
	26 24	X	
10	101 103		X
	102 108	X	
	105 107		X
	106 104	X	
CONT	B A K1 TB2 TB4 TB3 K1		X
		X	
	E G H		X

ELECTROSWITCH #7840DD

LEGEND
- SLIDING LINK TERMINALS
- LED INDICATING LIGHT

TYPICAL LABEL
WIRE LABEL → "P(+)
DEVICE DESIGNATION → 86 TT
ELEM. SHEET NUMBER
WIRE LABEL → TPZZZ
TERMINAL NUMBER

SEL 487B (BUS DIFFERENTIAL) I/O ASSIGNMENTS

ELEMENT	FUNCTION
IN101	87BS CO POSITION
IN102	SECONDARY 86BS LOR COIL MONITOR
IN104	86BS LOR TRIP
IN107	BREAKER FAILURE TRIP
IN201	OSCILLOGRAPHIC CROSS TRIG
OUT108	RELAY FAILURE
OUT201	TRIP SECONDARY 86BS LOR
OUT206	OSCILLOGRAPHIC CROSS TRIG
OUT208	86BS LOR RESET

REFERENCES:
01-173-D263 PANEL #60 F.V. & NAMEPLATES
01-173-D265 PANEL #60 WIRING DIAGRAM
01-173-D266 PANEL #60 LOGIC DIAGRAM (SEL-487B)

AUTOCAD ELECTRICAL
THIS DRAWING CONTAINS AUTOCAD ELECTRICAL ELEMENTS

P.I.#1899807

BURNS McDONNELL
4004 SUMMIT BLVD. NE, SUITE 1200
ATLANTA, GA 30319
PHONE: (770)587-4776
Burns & McDonnell Engineering Co. Inc.
GA ENGINEERING LICENSE: PEF002030
EXPIRATION DATE: 6/30/2026
THE REGISTRANT OF THE NEWLY APPLIED SEAL, DATED XX/XX/2024, ONLY ASSUMES RESPONSIBILITY FOR THE CHANGES AS INDICATED BY THE FOLLOWING REVISIONS(s):

PI:		PI:		PI:		PI:	01	JOR	GAS	5/1/2013	PI: FC5	02	BAS	JWH	USPP	3/27/2020	PI: 1616363	03	JCM
							CHANGES TO CT CIRCUIT, FOR RECORD ONLY.					FC#10 (CC): UPDATED STATUS POINT NAMES.						REPLACE CARTERSVILLE 230KV LINE RELAYING PANEL. SWAP PRI & SEC CT CIRCUITS FOR PCB #228 LINE RELAYING & CHANGE CT RATIOS.	

JCM	2/5/2021	PI: 1855101	04	EG	SW	AA	8/16/2024	PI: 1899807
			ADD RELAYING FOR PANEL 13 AND PCB 888.					

GEORGIA POWER
A SOUTHERN COMPANY

FACILITY NAME: MCGRAU FORD TS

TITLE: PANEL #60 ELEMENTARY DIAGRAM (STRAIGHT BUS) 230KV BUS. NO. 2 SEC. DIFF. (SEL487B) REL.

(TRANS. BUS PROTECTION/SEL487B/SECONDARY/LOCKOUT/BKR. & HALF)

DRAWN:	CP	TYPE:	52	FACILITY #: 01-173	NUMBER: D- 264
CHECKED:	TEB	SCALE:	N.T.S.		SHEET: - 001 -
APPROVED:	1402601	BOM:			REV: - 03
DATE:	2/24/2012	ASC FACS:			ALT DWG NUM:

BSP-87BS-D-2-001-0

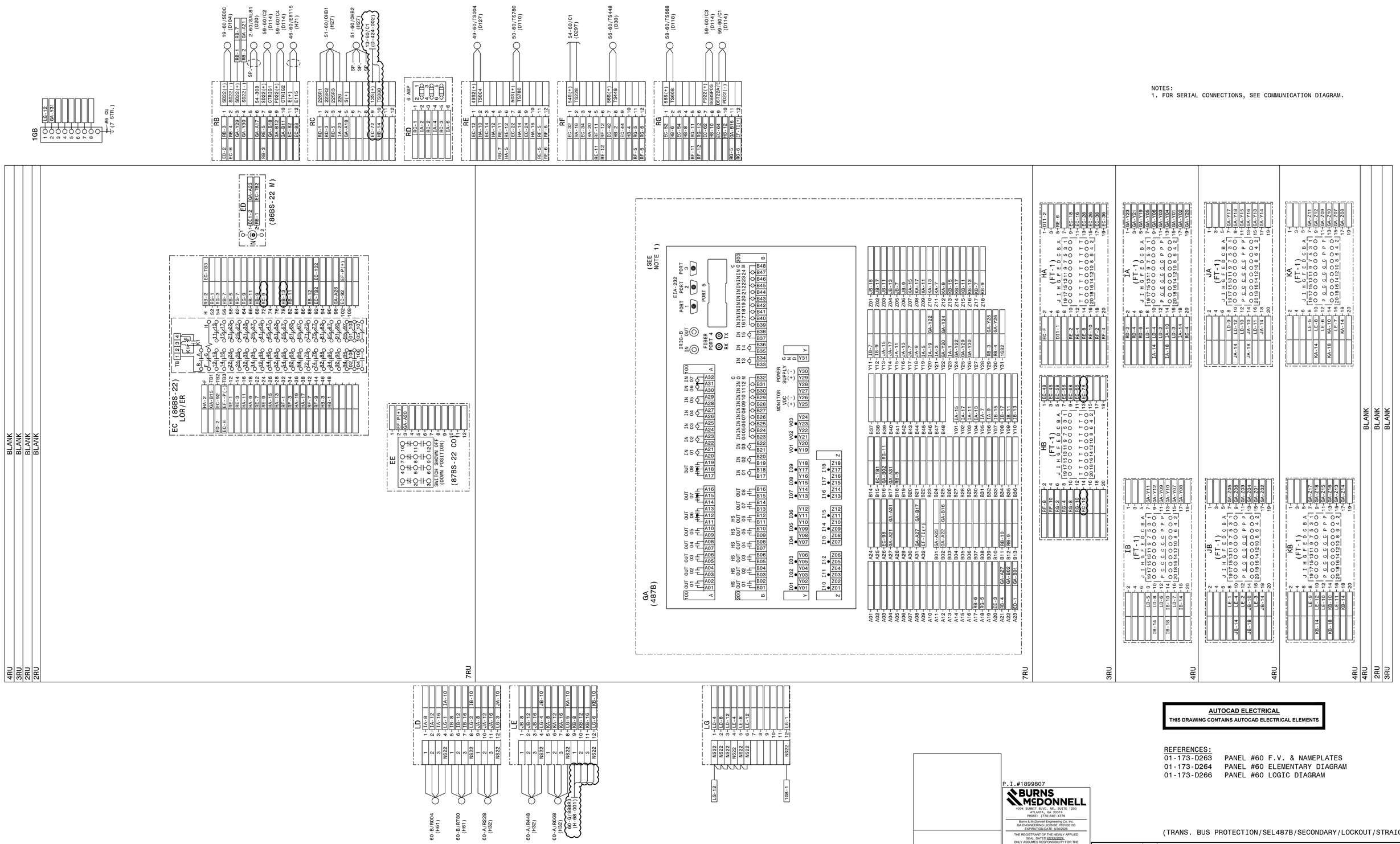

NOTES:
1. FOR SERIAL CONNECTIONS, SEE COMMUNICATION DIAGRAM.

AUTOCAD ELECTRICAL
THIS DRAWING CONTAINS AUTOCAD ELECTRICAL ELEMENTS

REFERENCES:
01-173-D263 PANEL #60 F.V. & NAMEPLATES
01-173-D264 PANEL #60 ELEMENTARY DIAGRAM
01-173-D266 PANEL #60 LOGIC DIAGRAM

BSP-87BS-D-3-001-0

(TRANS. BUS PROTECTION/SEL487B/SECONDARY/LOCKOUT/STRAIGHT BUS)

P.I.#1899807

BURNS McDONNELL
4004 SUMMIT BLVD., NE, SUITE 1200
ATLANTA, GA 30319
PHONE: (770)587-4774
Burns & McDonnell Engineering Co. Inc.
GA ENGINEERING LICENSE: PEF000100
EXPIRATION DATE: 6/30/2026
THE REGISTRANT OF THE NEWLY APPLIED SEAL DATED XXXXXXXXX ONLY ASSUMES RESPONSIBILITY FOR THE CHANGES AS INDICATED BY THE FOLLOWING REVISIONS(S):xx

PI:	PI:	PI:	PI:	PI:	01 BAS JWH USPP 3/27/2020 PI: 1616363	02 JCM JCM 2/5/2021 PI: 1855101	03 EG DN AA 8/20/2024 PI: 1899807
					FC#10 (CC): UPDATED STATUS POINT NAME.	REMOVE CABLE 54-60/TS228. ADD CABLE 54-60/C1.	INSTALL CABLE 60-G/88BR3 AND 13-60/C1. UPDATE LOCKOUT RELAY WIRING.

GEORGIA POWER
A SOUTHERN COMPANY

FACILITY NAME: MCGRAU FORD TS

TITLE: PANEL #60 WIRING DIAGRAM (STRAIGHT BUS) 230KV BUS NO. 2 SEC. DIFF. (SEL487B) REL.

DRAWN: CP					
CHECKED: TEB	TYPE: WD	FACILITY #: 01-173	NUMBER: D- 265	SHEET: - 001	REV: - 02
APPROVED: 1402601	SCALE: N.T.S.				
DATE: 2/24/2012	BOM:				
	ASC FACS:				ALT DWG NUM:

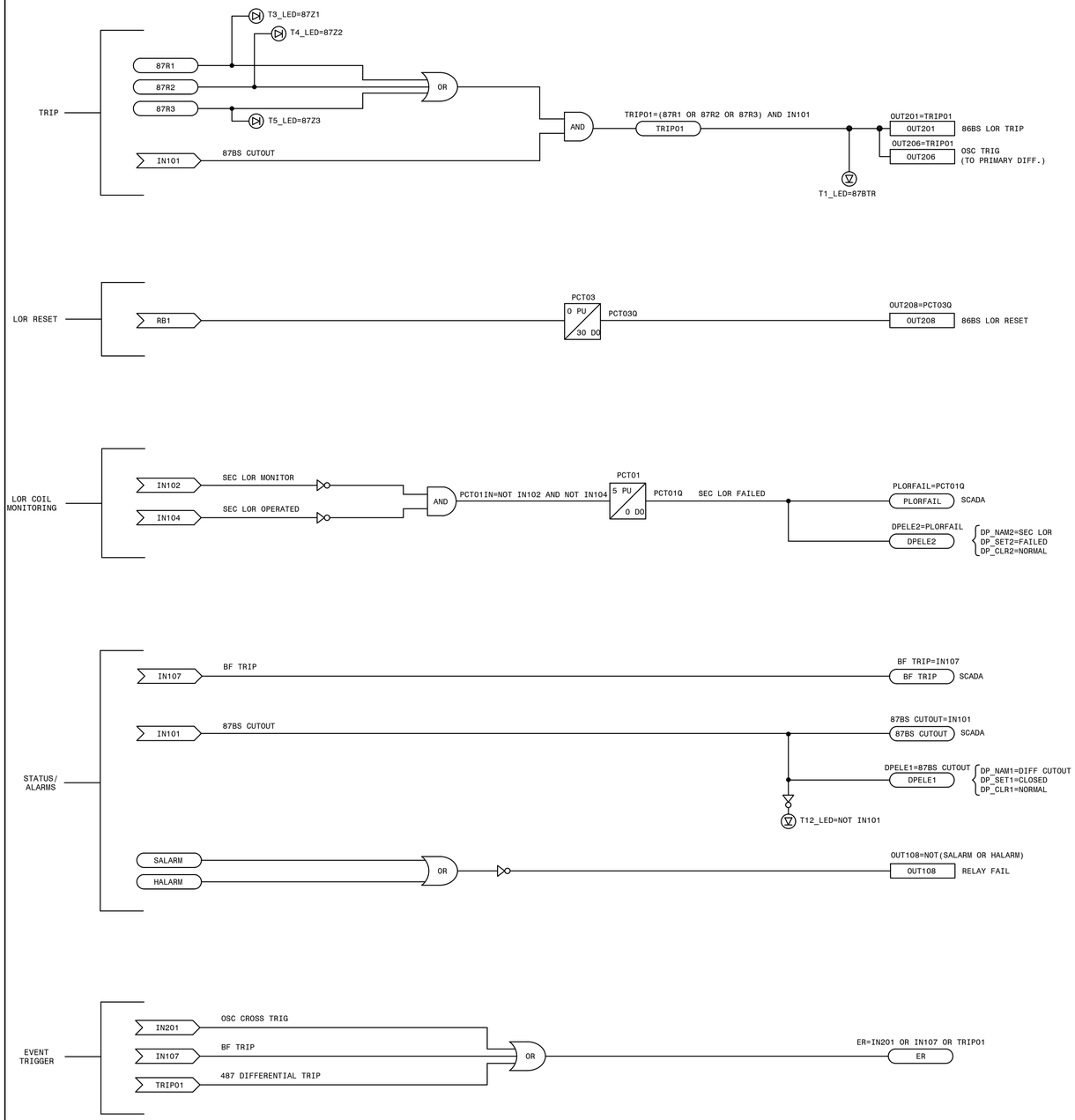

LEGEND

XXXX	SEL INTERNAL RELAY ELEMENT OR SETTING
XXXX	EXTERNAL INPUT, PUSHBUTTON OR REMOTE BIT
XXXX	SEL RELAY OUTPUT
XX PU / XX DO	SEL TIMER (INCYCLES)
NOT	

PRELIMINARY DESIGN
INFORMATION CONTAINED WITHIN THIS PRELIMINARY
DESIGN PACKAGE IS SUBJECT TO CHANGE.
NOT FOR CONSTRUCTION

REFERENCES:
01-173-D264 PANEL #60 ELEMENTARY DIAGRAM
01-173-D265 PANEL #60 WIRING DIAGRAM

BSP-87BS-D-4-001-0

(TRANS. BUS PROTECTION/SEL487B/SECONDARY/LOCKOUT/STRAIGHT BUS)

PI:	PI:	PI:	PI:	PI:	PI:	PI:	PI:				

GEORGIA POWER
A SOUTHERN COMPANY

DRAWN: CP	FACILITY NAME: MCGRAU FORD TS				
CHECKED: TEB	TITLE: PANEL #60 LOGIC DIAGRAM (STRAIGHT BUS) 230KV BUS NO. 2 SEC. DIFF. (SEL487B) REL.				
APPROVED: 1402601	TYPE: 52, 52L	FACILITY #: 01-173	D	NUMBER: 266	SHEET: - 001 -	REV: 0
DATE: 2/24/2012	SCALE: N.T.S.				
	BOM:				
	ASC FACS:			ALT DWG NUM:	

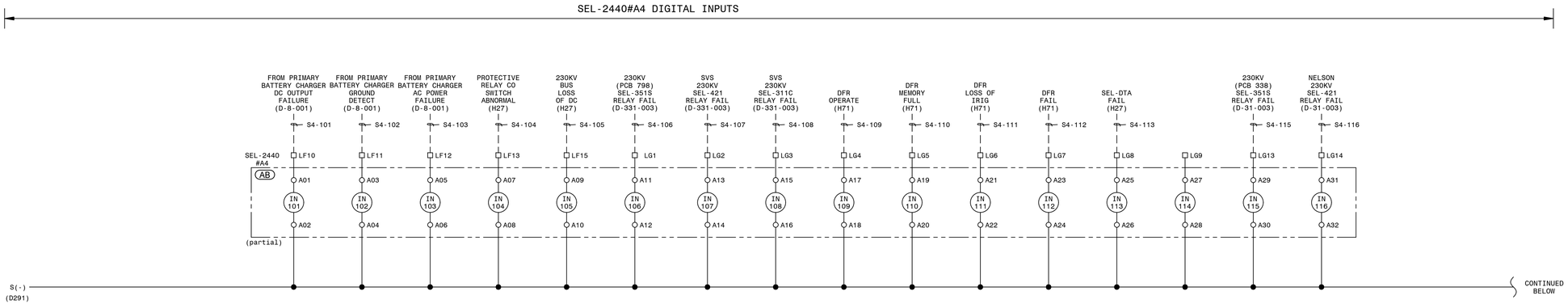

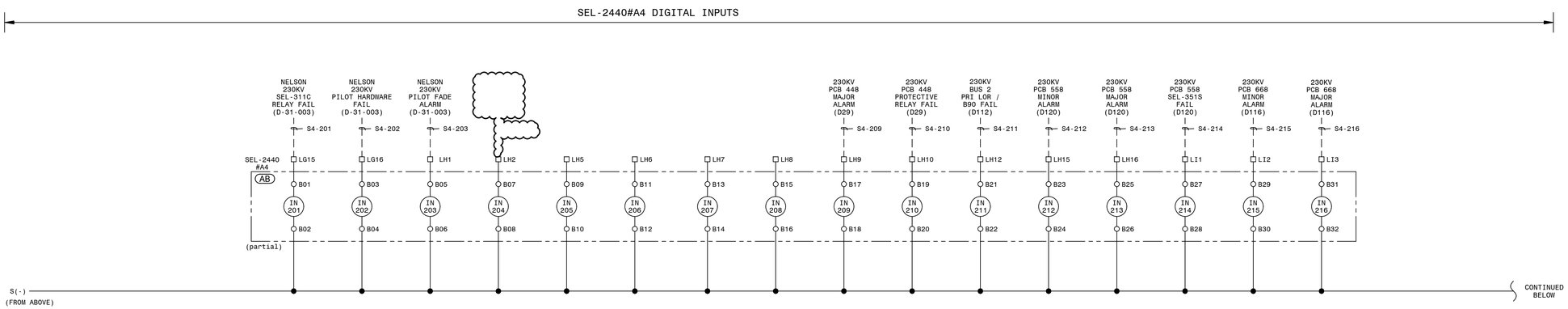

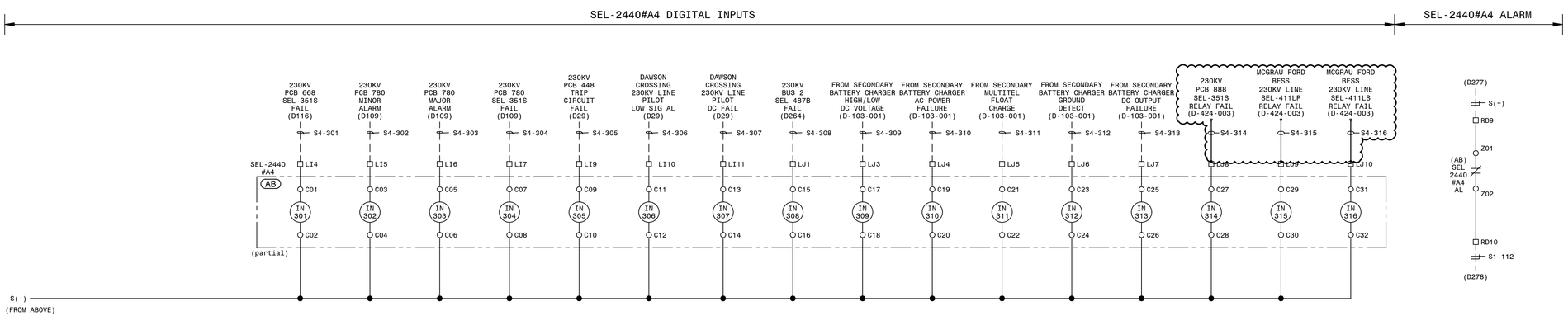

SEL-2440#A4 I/O ASSIGNMENT

ELEMENT	FUNCTION
IN 101	PRIMARY BATTERY OPEN CIRCUIT
IN 102	PRIMARY BATTERY GROUND FAULT
IN 103	PRIMARY BATTERY CHARGER LOSS OF AC
IN 104	PROTECTIVE RELAY SWITCH ABNORMAL
IN 105	230KV BUS LOSS OF DC
IN 106	SEL-351S RELAY FAILURE ALARM (PCB 798)
IN 107	SVS 230KV SEL-421 RELAY FAILURE ALARM
IN 108	SVS 230KV SEL-311C RELAY FAILURE ALARM
IN 109	DFR OPERATE
IN 110	DFR MEMORY FULL
IN 111	DFR LOSS OF IRIG
IN 112	DFR FAIL
IN 113	SEL-DTA FAIL
IN 114	SPARE
IN 115	SEL-351S RELAY FAILURE ALARM (PCB 338)
IN 116	NELSON 230KV SEL-421 RELAY FAILURE ALARM
IN 201	NELSON 230KV SEL-311C RELAY FAILURE ALARM
IN 202	NELSON 230KV PILOT HARDWARE FAILURE ALARM
IN 203	NELSON 230KV PILOT FADE ALARM
IN 204	
IN 205	
IN 206	
IN 207	
IN 208	
IN 209	230KV PCB 448 MAJOR ALARM
IN 210	230KV PCB 448 PROTECTIVE RELAY FAIL
IN 211	230KV BUS 2 PRIMARY LOR / GE-B90 FAIL
IN 212	230KV PCB 558 MINOR ALARM
IN 213	230KV PCB 558 MAJOR ALARM
IN 214	230KV PCB 558 SEL-351S FAIL
IN 215	230KV PCB 668 MINOR ALARM
IN 216	230KV PCB 668 MAJOR ALARM
IN 301	230KV PCB 668 SEL-351S FAIL
IN 302	230KV PCB 780 MINOR ALARM
IN 303	230KV PCB 780 MAJOR ALARM
IN 304	230KV PCB 780 SEL-351S FAIL
IN 305	230KV PCB 448 TRIP CIRCUIT FAIL
IN 306	DAWSON CROSSING 230KV LINE PILOT LOW SIGNAL ALARM
IN 307	DAWSON CROSSING 230KV LINE PILOT DC FAIL
IN 308	230KV BUS 2 SEL-487B FAIL
IN 309	SECONDARY BATTERY HIGH/LOW VOLTAGE
IN 310	SECONDARY BATTERY CHARGER LOSS OF AC
IN 311	SECONDARY BATTERY OPEN CIRCUIT
IN 312	SECONDARY BATTERY GROUND FAULT
IN 313	SECONDARY BATTERY DC OUTPUT FAILURE
IN 314	230KV PCB 888 SEL-351S RELAY FAIL
IN 315	MCGRAU FORD BESS 230KV LINE SEL-411LP RELAY FAIL
IN 316	MCGRAU FORD BESS 230KV LINE SEL-411LS RELAY FAIL

AUTOCAD ELECTRICAL
THIS DRAWING CONTAINS AUTOCAD ELECTRICAL ELEMENTS

REFERENCES:

01-173-B2	PANEL #2 FRONT VIEW, TRANSMISSION SIA PANEL
01-173-D20	PANEL #2 WIRING DIAGRAM, TRANSMISSION SIA PANEL
01-173-D186	SIA COMMUNICATION CONNECTION DIAGRAM
01-173-D291	PANEL #2 ELEMENTARY DIAGRAM SH. 1, TRANSMISSION SIA PANEL

P.I.#1899807

BURNS McDONNELL
4004 SUMMIT BLVD., NE., SUITE 1200
ATLANTA, GA 30319
PHONE: (770)587-4776
Burns & McDonnell Engineering Co. Inc.
GA ENGINEERING LICENSE: PEF000100
EXPIRATION DATE: 6/30/2026
THE REGISTRANT OF THE NEWLY APPLIED SEAL, DATED XX/XX/2024, ONLY ASSUMES RESPONSIBILITY FOR THE CHANGES AS INDICATED BY THE FOLLOWING REVISIONS:04.

PI:	PI:	PI:	PI:	01 JCM JCM 2/5/2021 PI: 1855101	CARTERSVILLE 230KV LINE PANEL REPLACEMENT: REMOVE INPUTS 115-201 & 205-206. ADD INPUT 206.
				02 BPE BPE BPE 05/31/2023 PI: 1930501	UPDATE INPUTS AND OUTPUTS FOR NEW PANELS #44, #45 & #55 & NEW BATTERY CHARGER AS SHOWN.
				03 RJH KDB USPP 4/1/2024 PI: 2014906	REMOVE INPUT 206 PCM FAILURE ALARM FROM PANEL 54.
				04 EG SW AA 8/16/2024 PI: 1899807	ADD ALARM POINTS FOR PANEL 13. REMOVE NELSON POWERCOMM FAIL AT INPUT 204 PER SIA COMMENTS.

GEORGIA POWER
A SOUTHERN COMPANY

FACILITY NAME: MCGRAU FORD TS

TITLE: PANEL #2 ELEMENTARY DIAGRAM SH. 2, TRANSMISSION SIA PANEL

DRAWN:	BAS	TYPE:	SIA	FACILITY #: 01-173	NUMBER: D- 292
CHECKED:	JWH	SCALE:	N.T.S.		SHEET: - 001 -
APPROVED:	USPP	BOM:			REV: 03
DATE:	3/23/2020	ASC FACS:			ALT DWG NUM:

LABEL DETAILS			
LABEL NO.	FIRST LINE	SECOND LINE	THIRD LINE
1	PANEL NO. 42	SVS FIBER SPLICE PANEL	DWG. NO.01-173-D-330
2	PANEL NO. 42	SVS FIBER SPLICE PANEL	DWG. NO.01-173-D-330

QTY	ITEMS	CATALOG	DESCRIPTION	REMARKS
1	AA	RHCL-I	27IN X 90IN SWITCHBOARD PANEL (FULL RACK) WITH FRAME	DWG-PAN-CONST-D1, DWG-PAN-CONST-D2
1	AB	RGXC-I	RACK PANEL TYPE C 10-RACK UNITS	DWG-PAN-CONST-D1
2	AK	BJPE-I	12 POLE SLIDING LINK TERMINAL BLOCK	STATES ELECTRIC MFG: M-25012-T
1	AL	FUPF	FUSE BLOCK, PHENOL,2-POLE,1-30A	
2	AM	RFVM	FUSE,CARTRIDGE,1ELEM,NR,250V,6A	
1	AO	BAVD-I	COPPER NEUTRAL BAR GRD TERM, #4-#14	BURNDY: K12P4CG1
5	AP	RGWT-I	RACK PANEL TYPE A 1-RACK UNIT	DWG-PAN-CONST-D1

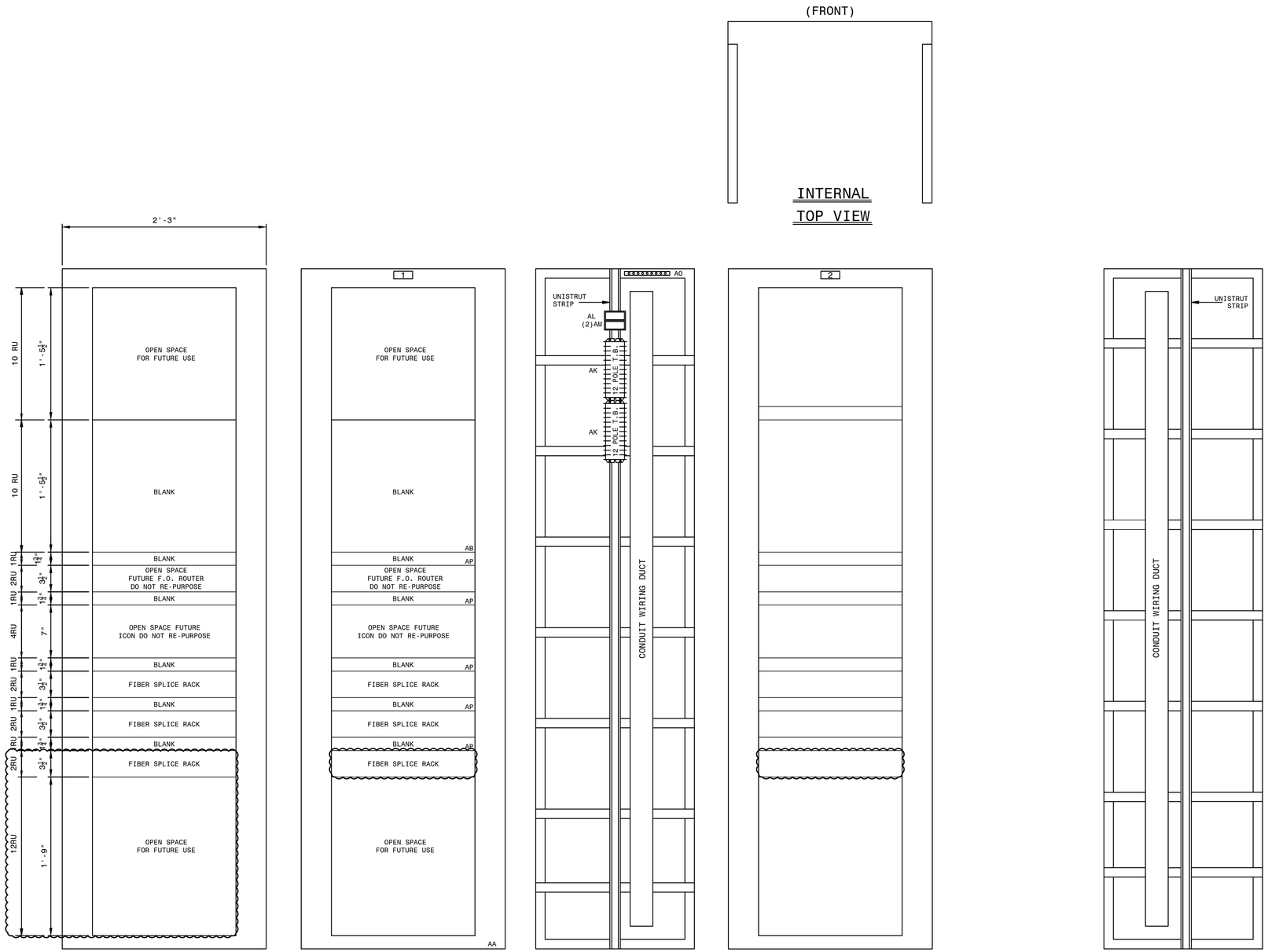

FRONT PANEL
(PUNCH MARKS)

FRONT PANEL
(NAMEPLATES AND
MATERIAL MARKS)

LEFT REAR

REAR PANEL
INTERNAL PANEL
REAR VIEW

RIGHT REAR

AUTOCAD ELECTRICAL
THIS DRAWING CONTAINS AUTOCAD ELECTRICAL ELEMENTS

NOTES:
1. EQUIPMENT TO BE PLACED AS NEEDED.
2. FOR DATA CONNECTION, SEE COMMUNICATION DIAGRAM D-186-001.

REFERENCES:
01-173-D-330-002 PANEL #42 WIRING DIAGRAM
01-173-D-330-003 PANEL #42 ELEMENTARY DIAGRAM
01-173-D-330-004 PANEL #42 FIBER SPLICE CONNECTIONS (SVS)
01-173-D-330-005 PANEL #42 FIBER SPLICE CONNECTIONS (MCGRAU FORD BESS)

P.I.#1899807

BURNS McDONNELL
4004 SUMMIT BLVD., NE, SUITE 1200
ATLANTA, GA 30319
PHONE: (770)587-4776
Burns & McDonnell Engineering Co. Inc.
GA ENGINEERING LICENSE: PEF000100
EXPIRATION DATE: 6/30/2026

THE REGISTRANT OF THE NEWLY APPLIED SEAL, DATED 06/30/2021, ONLY ASSUMES RESPONSIBILITY FOR THE CHANGES AS INDICATED BY THE FOLLOWING REVISIONS: 00

PI:	PI:	PI:	PI:	PI:	PI:	PI:

01	EG	SW	AA	9/25/2024	PI: 1899807

INSTALL FIBER PANEL FROM MCGRAU FORD BESS FIBER CONNECTIONS. UPDATE DRAWING NAME, DRAWING REFERENCES AND OPEN SPACE RACK UNITS.

SVS FIBER AND MCGRAU FORD BESS INTERFACE

GEORGIA POWER
A SOUTHERN COMPANY

FACILITY NAME:	MCGRAU FORD TS
TITLE:	PANEL #42, FRONT VIEW & NAMEPLATES - SVS AND MCGRAU FORD BESS FIBER INTERFACE
DRAWN: BPE	
CHECKED: BPE	TYPE: FV
APPROVED: 1930501	SCALE: 1 1/2"=1'-0"
DATE: 05/31/2023	BOM:
ASC FACS:	

FACILITY #: 01-173

D- NUMBER: 330 SHEET: - 001 - REV: 00

ALT DWG NUM:

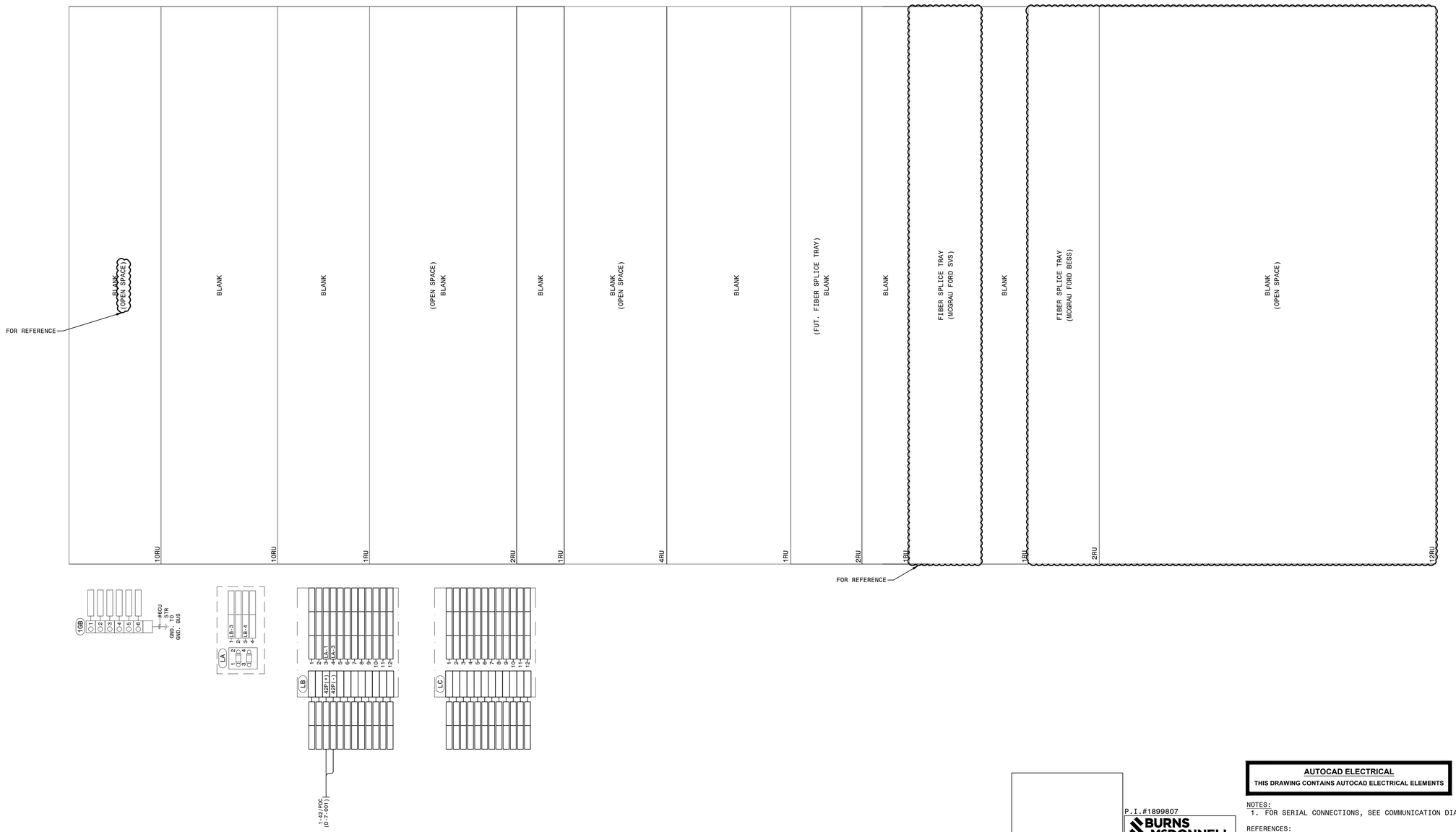

P.I.#1899807

BURNS McDONNELL
4004 SUMMIT BLVD., NE, SUITE 1200
ATLANTA, GA 30319
PHONE: (770)587-4776

Burns & McDonnell Engineering Co. Inc.
GA ENGINEERING LICENSE: PEF000100
EXPIRATION DATE: 6/30/2026

THE REGISTRANT OF THE NEWLY-APPLIED SEAL DATED XX/XX/XXXX ONLY ASSUMES RESPONSIBILITY FOR THE CHANGES AS INDICATED BY THE FOLLOWING REVISIONS:(1)

AUTOCAD ELECTRICAL

THIS DRAWING CONTAINS AUTOCAD ELECTRICAL ELEMENTS

NOTES:
1. FOR SERIAL CONNECTIONS, SEE COMMUNICATION DIAGRAM D-186.

REFERENCES:
01-173-D-330-001 PANEL #42 FRONT VIEW & NAMEPLATES
01-173-D-330-003 PANEL #42 ELEMENTARY
01-173-D-330-004 PANEL #42 FIBER SPLICE CONNECTIONS (SVS)
01-173-D-330-005 PANEL #42 FIBER SPLICE CONNECTIONS (MCGRAU FORD BESS)

SVS (AND MCGRAU FORD BESS) FIBER INTERFACE

PI:	PI:	PI:	PI:	PI:	PI:	PI:	PI:	01	EG	SW	AA	1/3/2025	PI: 1899807

UPDATE DRAWING REFERENCES, DRAWING TITLE AND BLANK SPACE RACK UNITS. FIELD TO VERIFY LOCATION OF MCGRAU FORD SVS FIBER SPLICE TRAY. REMOVE 14 RACK UNIT BLANK PANEL. INSTALL MCGRAU FORD BESS FIBER SPLICE TRAY.

GEORGIA POWER
A SOUTHERN COMPANY

FACILITY NAME:	MCGRAU FORD TS				
TITLE:	PANEL #42, WIRING DIAGRAM - SVS (AND MCGRAU FORD BESS) FIBER INTERFACE				
DRAWN: BPE					
CHECKED: BPE	TYPE: WD	FACILITY #: 01-173	D-	NUMBER: 330	SHEET: - 002 - REV: 00
APPROVED: 1930501	SCALE: NTS				
DATE: 05/31/2023	BOM:				
ASC FACS:				ALT DWG NUM:	

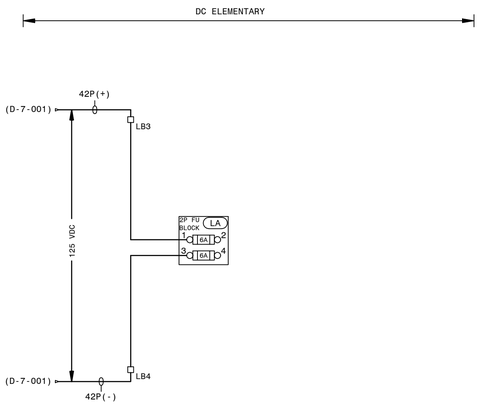

AUTOCAD ELECTRICAL

THIS DRAWING CONTAINS AUTOCAD ELECTRICAL ELEMENTS

P.I.#1899807

BURNS McDONNELL
400A SUMMIT BLVD., NE, SUITE 1200
ATLANTA, GA 30319
PHONE: (770)587-4776

Burns & McDonnell Engineering Co. Inc.
GA ENGINEERING LICENSE: PEF000100
EXPIRATION DATE: 6/30/2026

THE REGISTRANT OF THE NEWLY APPLIED SEAL DATED 00/00/0000, ONLY ASSUMES RESPONSIBILITY FOR THE CHANGES AS INDICATED BY THE FOLLOWING REVISIONS:

LEGEND:

- SLIDING LINK TERMINALS OR PHEONIX PLUG
- LED INDICATING LIGHT
- SWITCH SHOWN IN OFF POSN

TYPICAL LABEL

WIRE LABEL — P(+)
DEVICE DESIGNATION — 86 TT — 1 — TERMINAL NUMBER
ELEM. SHEET NUMBER — 2
WIRE LABEL — TPZZZ

REFERENCES:

01-173-D-330-001 PANEL #42 FRONT VIEW & NAMEPLATES
01-173-D-330-002 PANEL #42 WIRING DIAGRAM
01-173-D-330-004 PANEL #42 FIBER SPLICE CONNECTIONS (SVS)
01-173-D-330-005 PANEL #42 FIBER SPLICE CONNECTIONS (MCGRAU FORD BESS)

SVS AND MCGRAU FORD BESS FIBER INTERFACE

| | | |

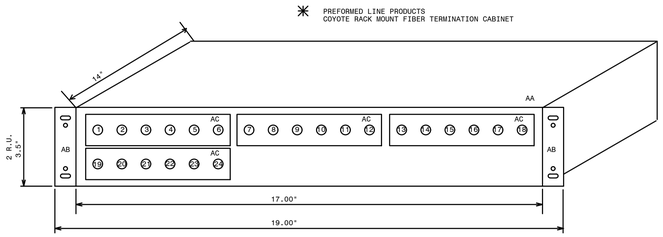

FRONT VIEW CABINETS 1, 2

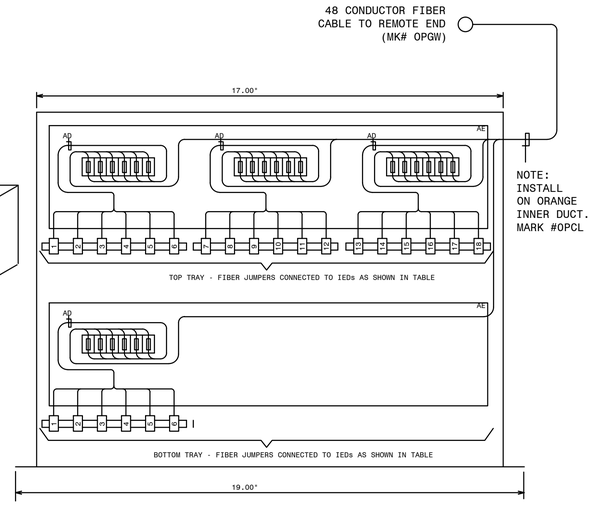

TOP VIEW CABINETS 1, 2

TABLE A - FIBER PATCH PANEL 1 MCGRAU FORD TS CONTROL HOUSE, PROTECTION TABLE

(SEE NOTE 1)

FIBER NUMBER	FUNCTION (TX OR RX)	SCHEME	CABLE NAME	LOCAL CONNECTION	REMOTE DEVICE	MARK #	COLOR	BUFFER
1	SEL-421-TX	MCGRAU FORD - SVS (PRIMARY)	TO-43/FO1	SEL-421 (PRIMARY)	SEL-487E (PRIMARY-SVS)		BLUE	BLUE
2	SEL-421-RX						ORANGE	
3	SEL-421-TX						GREEN	
4	SEL-421-RX						BROWN	
5	SEL-421-TX						GRAY	
6	SEL-421-RX						WHITE	
7	SEL-421-TX						RED	
8	SEL-421-RX						BLACK	
9							YELLOW	
10							PURPLE	
11							PINK	
12							CYAN	
13	SEL-311C-TX	MCGRAU FORD - SVS (SECONDARY)	TO-43/FO2	SEL-311C (SECONDARY)	SEL-487E (SECONDARY-SVS)		BLUE	ORANGE
14	SEL-311C-RX						ORANGE	
15	SEL-311C-TX						GREEN	
16	SEL-311C-RX						BROWN	
17	SEL-311C-TX						GRAY	
18	SEL-311C-RX						WHITE	
19	SEL-311C-TX						RED	
20	SEL-311C-RX						BLACK	
21							YELLOW	
22							PURPLE	
23							PINK	
24							CYAN	

MCGRAU FORD FIBER PATH (OPGW) ROUTING DETAIL

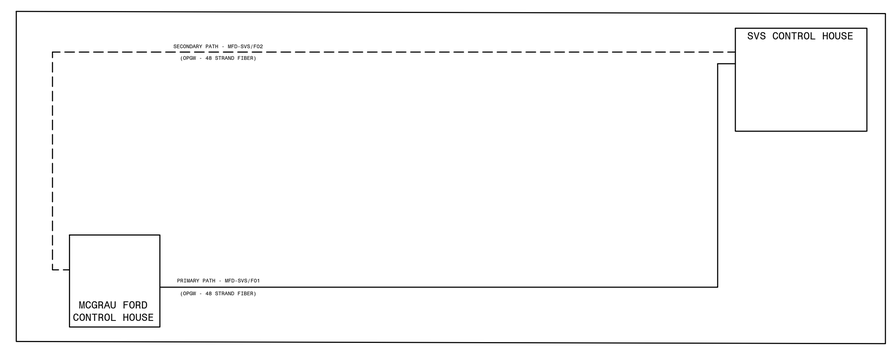

✳ QTY	ITEM	MARK #	CMDTY #	DESCRIPTION	REMARKS
2	AA	OPCF	J-19763	PLP RDC6 RACK MOUNT CABINET ALLOWS UP TO 36 FIBER SPLICES AND CONNECTIONS	PLP MODEL # RDC6
4	AB	OPCJ	J-19773	MOUNTING BRACKET ASSEMBLY FOR MOUNTING RDC6 IN 19" RACK MOUNT PANEL	PLP MODEL # BKT2U19A
8	AC			LC CONNECTORS - TO BE SELECTED AND PLACED BY IT GROUP	LC CONNECTORS
8	AD	OPCH	J-19770	FIBER PIGTAIL - MIC CABLE 6 FIBER, 2 METER ST-SM	PROVIDES SM-ST TERM. FOR 6 FIBERS.
4	AE	OPBD	J-19598	FIBER CABLE SPLICE TRAY - MOUNTS INTERNAL TO OPCF	PLP MODEL # 80805514
	AF	OPCP	J-19820	SINGLE MODE SIMPLEX JUMPER ST TO ST (1 METER)	
	AG	OPCQ	J-19821	SINGLE MODE SIMPLEX JUMPER ST TO ST (33 METER)	
	AH	OPCR	J-19803	SINGLE MODE DUPLEX JUMPER ST TO ST (1 METER)	
	AI	OPCM	J-19804	SINGLE MODE DUPLEX JUMPER ST TO ST (2 METER)	
	AJ	OPDN	J-19805	SINGLE MODE DUPLEX JUMPER ST TO ST (5 METER)	
	AK	OPDA	J-19708	62.5 MICRON MULTIMODE DUPLEX FIBER JUMPER ST TO ST (1 METER)	
	AL	OPDB	J-82075	62.5 MICRON MULTIMODE DUPLEX FIBER JUMPER ST TO ST (2 METER)	
	AM	OPDC	J-81612	62.5 MICRON MULTIMODE DUPLEX FIBER JUMPER ST TO ST (5 METER)	
4	AO	OPDP	J-19864	SINGLE MODE DUPLEX JUMPER ST TO ST (20 METER)	
1	AP	OPCO	J-19776	PLP RDC3 RACK MOUNT CABINET ALLOWS UP TO 18 FIBER SPLICES AND CONNECTIONS	PLP MODEL # RDC3
		OPAZ			

✳ PROVIDED BY IT.

P.I.#1899807

BURNS McDONNELL
400N EMMET BLVD., NL, SUITE 1200
ATLANTA, GA 30319
PHONE: (770)1987-4776
Burns & McDonnell Engineering Co, Inc.
GA ENGINEERING LICENSE: PEF000100
EXPIRATION DATE: 6/30/2025
THE REGISTRANT OF THE NEWLY APPLIED SEAL DATED 05/06/2021, ONLY ASSUMES RESPONSIBILITY FOR THE CHANGES AS INDICATED BY THE FOLLOWING REVISION(S):01-

NOTE:
1. FUNCTION MUST BE REVERSED ON REMOTE END. IE - IF A1 IS CONNECTED TO TX ON THIS END, IT MUST BE CONNECTED TO RX ON REMOTE END.
2. SEE SIA COMMUNICATION CONNECTION DIAGRAM D-186 FOR ADDITIONAL INFORMATION.
3. FIELD TO VERIFY FINAL FIBER INSTALLATION DETAILS.

REFERENCES:
01-173-D-330-001 PANEL #42 FRONT VIEW & NAMEPLATES
01-173-D-330-002 PANEL #42 WIRING DIAGRAM
01-173-D-330-003 PANEL #42 AC/DC ELEMENTARY
01-173-D-330-005 PANEL #42 FIBER SPLICE CONNECTIONS (MCGRAU FORD BESS)

SVS FIBER INTERFACE

PI:	PI:	PI:	PI:	PI:	PI:	PI:

01	EG	SW	AA	1/3/2025	PI: 1899807

UPDATE DRAWING REFERENCES.

GEORGIA POWER
A SOUTHERN COMPANY

FACILITY NAME: MCGRAU FORD TS

TITLE: PANEL #42, FIBER SPLICE CONNECTIONS - SVS FIBER INTERFACE

DRAWN: BPE					
CHECKED: BPE	TYPE: WD	FACILITY #: 01-173	D-	NUMBER: 330	SHEET: - 004 - REV: 00
APPROVED: 1930501	SCALE: N.T.S.				
DATE: 05/31/2023	BOM:				
	ASC FACS:				ALT DWG NUM:

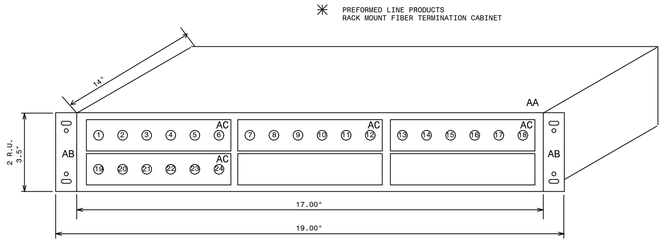

FRONT VIEW CABINET 3

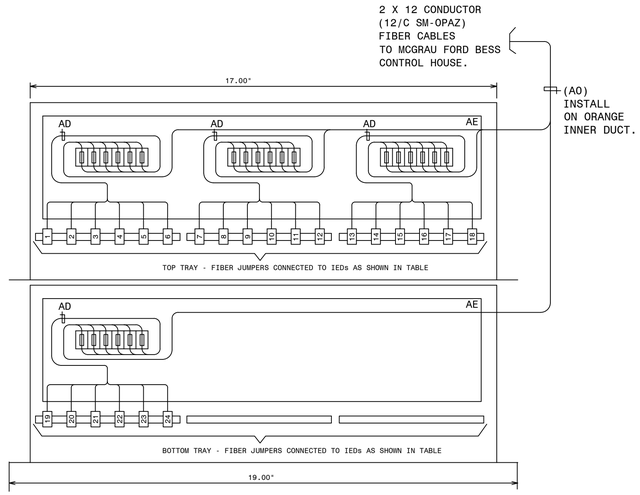

TOP VIEW CABINET 3

(SEE NOTE 1)

TABLE A - FIBER PANEL 2 (FOP-3) FIBER JUMPER CONNECTIONS

FIBER NUMBER	FUNCTION (TX OR RX)	CABLE NAME	REMOTE DEVICE	REMOTE LOCATION	DWG REF	MARK #	COLOR	BUFFER
1	PRI RELAY RX	13-42/FIB1	SEL-411LP MCGRAU FORD BESS 230KV LINE	PANEL 13	D-424-002	OPDP	BLUE	BLUE
2	PRI RELAY TX						ORANGE	
3	SPARE						GREEN	
4	SPARE						BROWN	
5	SPARE						GRAY	
6	SPARE						WHITE	
7	SPARE						RED	ORANGE
8	SPARE						BLACK	
9	SPARE						YELLOW	
10	SPARE						PURPLE	
11	SPARE						PINK	
12	SPARE						CYAN	
13	SEC RELAY RX	13-42/FIB2	SEL-411LS MCGRAU FORD BESS 230KV LINE	PANEL 13	D-424-002	OPDP	BLUE	GREEN
14	SEC RELAY TX						ORANGE	
15	SPARE						GREEN	
16	SPARE						BROWN	
17	SPARE						GRAY	
18	SPARE						WHITE	
19	SPARE						RED	BROWN
20	SPARE						BLACK	
21	SPARE						YELLOW	
22	SPARE						PURPLE	
23	SPARE						PINK	
24	SPARE						CYAN	

✳ QTY	ITEM	MARK #	CMDTY #	DESCRIPTION	REMARKS
1	AA	OPCF	J-19763	PLP RDC6 RACK MOUNT CABINET ALLOWS UP TO 36 FIBER SPLICES AND CONNECTIONS	PLP MODEL # RDC6
1	AB	OPCJ	J-19773	MOUNTING BRACKET ASSEMBLY FOR MOUNTING RDC6 IN 19" RACK MOUNT PANEL	PLP MODEL # BKT2U19A
4	AC	OPCG	J-19767	PLP 61SMST ST CONNECTOR SIX PACK	ST TO ST TERMINATION FOR 6 FIBERS
4	AD	OPCH	J-19770	FIBER PIGTAIL - MIC CABLE 6 FIBER, 2 METER ST-SM	PROVIDES SM-ST TERM. FOR 6 FIBERS.
1	AE	OPBD	J-19598	FIBER CABLE SPLICE TRAY - MOUNTS INTERNAL TO OPCF	PLP MODEL # 80805514
	AF	OPCP	J-19820	SINGLE MODE SIMPLEX JUMPER ST TO ST (1 METER)	
	AG	OPCQ	J-19821	SINGLE MODE SIMPLEX JUMPER ST TO ST (33 METER)	
	AH	OPCR	J-19803	SINGLE MODE DUPLEX JUMPER ST TO ST (1 METER)	
1	AI	OPCM	J-19804	SINGLE MODE DUPLEX JUMPER ST TO ST (2 METER)	
	AJ	OPDN	J-19805	SINGLE MODE DUPLEX JUMPER ST TO ST (5 METER)	
	AK	OPDA	J-19708	62.5 MICRON MULTIMODE DUPLEX FIBER JUMPER ST TO ST (1 METER)	
	AL	OPDB	J-82075	62.5 MICRON MULTIMODE DUPLEX FIBER JUMPER ST TO ST (2 METER)	
	AM	OPDC	J-81612	62.5 MICRON MULTIMODE DUPLEX FIBER JUMPER ST TO ST (5 METER)	
2	AN	OPDP	J-19864	SINGLE MODE DUPLEX JUMPER ST TO ST (20 METER)	
2	AO	OPAZ	J-19520	OPTICAL CABLE 12 FIBER SINGLE MODE	
	AP	OPBB	J-19549	OPTICAL CABLE 24 FIBER SINGLE MODE	

✳ PROVIDED BY IT.

NOTE:
1. FUNCTION MUST BE REVERSED ON REMOTE END. IE - IF A1 IS CONNECTED TO TX ON THIS END, IT MUST BE CONNECTED TO RX ON REMOTE END.

REFERENCES:

D-330-001	PANEL #42 FRONT VIEW AND NAMEPLATES
D-330-002	PANEL #42 WIRING DIAGRAM
D-330-003	PANEL #42 ELEMENTARY DIAGRAM
D-330-004	PANEL #42 FIBER SPLICE CONNECTIONS (SVS)

P.I.#1899807

BURNS McDONNELL
400N SUMMIT BLVD., NE, SUITE 1200
ATLANTA, GA 30319
PHONE: (770)1847-4776
Burns & McDonnell Engineering Co. Inc.
GA ENGINEERING LICENSE: PEF002100
EXPIRATION DATE: 6/30/2026
THE REGISTRANT OF THE NEWLY APPLIED SEAL DATED 00/00/0000, ONLY ASSUMES RESPONSIBILITY FOR THE CHANGES AS INDICATED BY THE FOLLOWING REVISIONS(s): No

BESS FIBER INTERFACE

GEORGIA POWER
A SOUTHERN COMPANY

FACILITY NAME: MCGRAU FORD TS

TITLE: PANEL #42, FIBER SPLICE CONNECTIONS - MCGRAU FORD BESS INTERFACE

DRAWN: EQ/BMCD					
CHECKED: SW/BMCD	TYPE: WD	FACILITY #: 01-173	D-	NUMBER: 330	SHEET: - 005 -	REV: - .A
APPROVED: PI#1899807	SCALE: N.T.S.				
DATE: 9/23/2024	BOM:				
	ASC FACS:			ALT DWG NUM:	

PI: PI: PI: PI: PI: PI: PI:

NAMEPLATE DETAILS			
NAMEPLATE NO.	FIRST LINE	SECOND LINE	THIRD LINE
1	PANEL NO. 13		DWG.01-173-D424
2	PANEL NO. 13		DWG.01-173-D424
3	351S7X RELAY	646888	CONTROL - BF/RCLS
4	351S7X RELAY	646888	CONTROL - BF/RCLS
5	BF CO	646888	
6	411L PRI RELAY	646888	MCGRAU FORD BESS 230KV LINE
7	411L PRI RELAY	646888	MCGRAU FORD BESS 230KV LINE
8	411L SEC RELAY	646888	MCGRAU FORD BESS 230KV LINE
9	411L SEC RELAY	646888	MCGRAU FORD BESS 230KV LINE

QTY	ITEMS	CATALOG	DESCRIPTION	REMARKS
1	AA	RHCL-I	27IN X 90IN SWITCHBOARD PANEL (FULL RACK) WITH FRAME	DWG-PAN-CONST-D1, DWG-PAN-CONST-D2
6	AB	RGWT-I	RACK PANEL TYPE A 1-RACK UNIT	DWG-PAN-CONST-D1
1	AC	RGWU-I	RACK PANEL TYPE A 2-RACK UNITS	DWG-PAN-CONST-D1
5	AD	RGWV-I	RACK PANEL TYPE B 3-RACK UNITS	DWG-PAN-CONST-D1
1	AE	RLAK	SEL-351S7X	SEL-0351S7XHE4B5421
3	AF	RHUA	2-10 POLE TYPE FT-1 SWITCHES, POS.A:(T T T T T T T T T),POS. B:(P P P C-C C-C C-C P), POS C:(TOGGLE SWITCH CUTOUT)	ABB #SS3G036014S01M
1	AG	RHHS-I	SWITCH,TOGGLE,4P,DT,15A,115V,.25A@125VDC	MICROSWITCH #4TL1-3
2	AH	RTIW	SEL-411L T/M LINE DIFF/STEP DIST WITH OC AND TRAVELING-WAVE FLT DET., 5RU	SEL #0411L1X6X5B8DHXH5E424XX
10	AM	BJPE-I	12 POLE SLIDING LINK TERMINAL BLOCK	STATES ELECTRIC MFG: M-25012-T
1	AN	BAVD-I	COPPER NEUTRAL BAR GRD TERM, #4-#14	BURNDY: K12P4CG1
1	AP	FUPF	FUSE BLOCK, PHENOL,2-POLE,1-30A	BUSSMANN: H25030-2SR
3	AQ	FUPH	FUSE BLOCK, PHENOL,3-POLE,1-30A	BUSSMANN: H25030-3S
10	AR	RFVM	FUSE,CARTRIDGE,1ELEM,NR,250V,6A	BUSSMANN: KTN-6/R-11630
2	AU	RFUT-I	REL-AUX, TRIP CURR IND., TIR, 1.0A OPER., COIL 10A NOM.	ELECTROMAX #6319209
1	AV	RGWW-I	RACK PANEL TYPE B 4-RACK UNITS	DWG-PAN-CONST-D1
4	BF	RHKH-I	TRANSF-CURRENT 5A WINDOW 500MV, DFR/DME	UTILITY SYSTEMS INC: CTR-1001-17714813

DETAIL A2
(PCB 888 351S7X CONFIGURABLE LABELS)

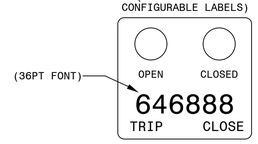

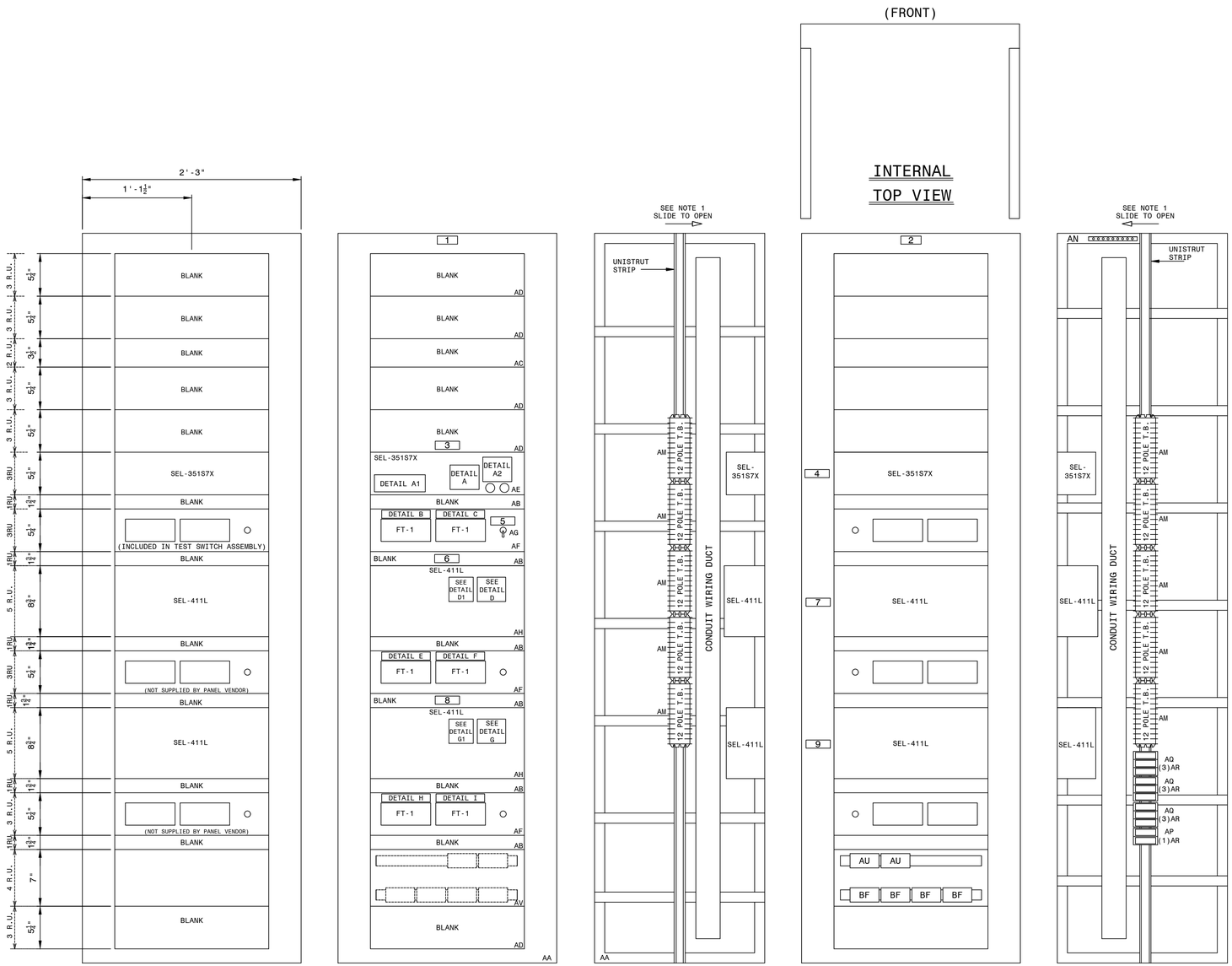

FRONT PANEL
(PUNCH MARKS)

FRONT PANEL
(NAMEPLATES AND MATERIAL MARKS)

LEFT REAR

REAR PANEL
(INTERNAL PANEL, REAR VIEW)

RIGHT REAR

DETAIL A
(351S7X CONFIGURABLE LABELS)

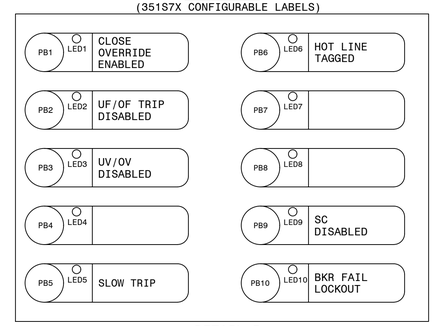

DETAIL A1

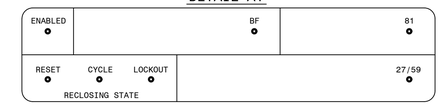

P.I.#1899807

BURNS McDONNELL
4004 SUMMIT BLVD. NE, SUITE 1200
ATLANTA, GA 30319
PHONE: (770)587-4776
Burns & McDonnell Engineering Co. Inc.
GA ENGINEERING LICENSE: PEF000100
EXPIRATION DATE: 6/30/2026
THE REGISTRANT OF THE NEWLY APPLIED SEAL DATED 06/30/2026 ONLY ASSUMES RESPONSIBILITY FOR THE CHANGES AS INDICATED BY THE FOLLOWING REVISIONS:

DETAIL B

351S7X TEST SWITCH (888)

PRI. TRIP 888	SEC. TRIP 888	PRI. BFT/ LO		BFT/ KEY PRI DTT	BFT/ KEY SEC DTT				
A	B	C	D	E	F	G	H	I	J

DETAIL C

351S7X TEST SWITCH (888)

V1	V2	V3	I1+	I1	I2+	I2	I3+	I3	VL1
A	B	C	D	E	F	G	H	I	J

DETAIL D
(411L PRI CONFIGURABLE LABELS)

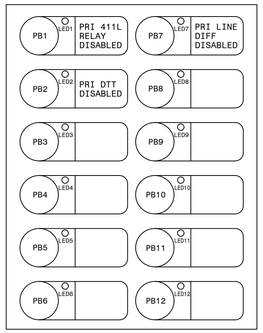

DETAIL D1

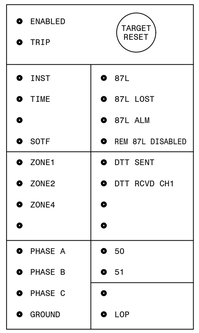

DETAIL E

411L PRI TEST SWITCH (888)

PRI. TRIP 888	BFI/ RI 888	BFI/ LO 888							
A	B	C	D	E	F	G	H	I	J

DETAIL F

411L PRI TEST SWITCH (888)

V1	V2	V3	I1+	I1	I2+	I2	I3+	I3	VG
A	B	C	D	E	F	G	H	I	J

DETAIL G
(411L SEC CONFIGURABLE LABELS)

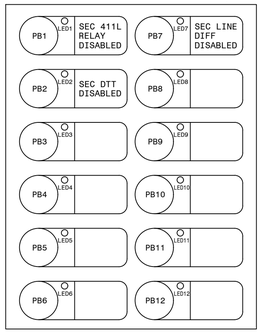

DETAIL G1

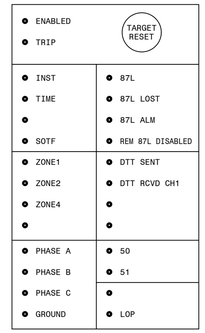

DETAIL H

411L SEC TEST SWITCH (888)

SEC. TRIP 888	BFI/ RI 888	BFI/ LO 888							
A	B	C	D	E	F	G	H	I	J

DETAIL I

411L SEC TEST SWITCH (888)

V1	V2	V3	I1+	I1	I2+	I2	I3+	I3	VG
A	B	C	D	E	F	G	H	I	J

REFERENCES:
D-424-002 PANEL 13 WIRING DIAGRAM
D-424-003 PANEL 13 DC ELEMENTARY DIAGRAM
D-424-004 PANEL 13 AC ELEMENTARY DIAGRAM
D-424-005 PANEL 13 LOGIC DIAGRAM (411L PRI)
D-424-006 PANEL 13 LOGIC DIAGRAM (411L SEC)
D-424-007 PANEL 13 LOGIC DIAGRAM (351S7X BF/RCLS)

NOTES:
1. SLIDING LINKS TO OPEN TOWARD INTERNAL WIRING SIDE.

AUTOCAD ELECTRICAL
THIS DRAWING CONTAINS AUTOCAD ELECTRICAL ELEMENTS

LNP-SELPR_D-32-001-06

PANEL 13, FRONT VIEW, TRANS. LINE 87L/DTT FIBER, STR. BUS

GEORGIA POWER A SOUTHERN COMPANY	FACILITY NAME: MCGRAU FORD TS		
DRAWN: EG/BMCD	TITLE: PANEL NO.13, FRONT VIEW - MC. FORD BESS 230KV LINE SEL411L (PRI-FIB LINE DIFF/DIST.), SEL411L (SEC-FIB LINE DIFF/DIST.), SEL351S (BF/RCLS		
CHECKED: SW/BMCD	TYPE: FV	FACILITY #: 01-173	NUMBER: D- 424 / SHEET: - 001 / REV: -.A
APPROVED: PI#1899807	SCALE: 1-1/2" = 1'-0"		
DATE: 7/31/2024	BOM:		
	ASC FACS:		ALT DWG NUM:

PI: PI: PI: PI: PI: PI: PI: PI:

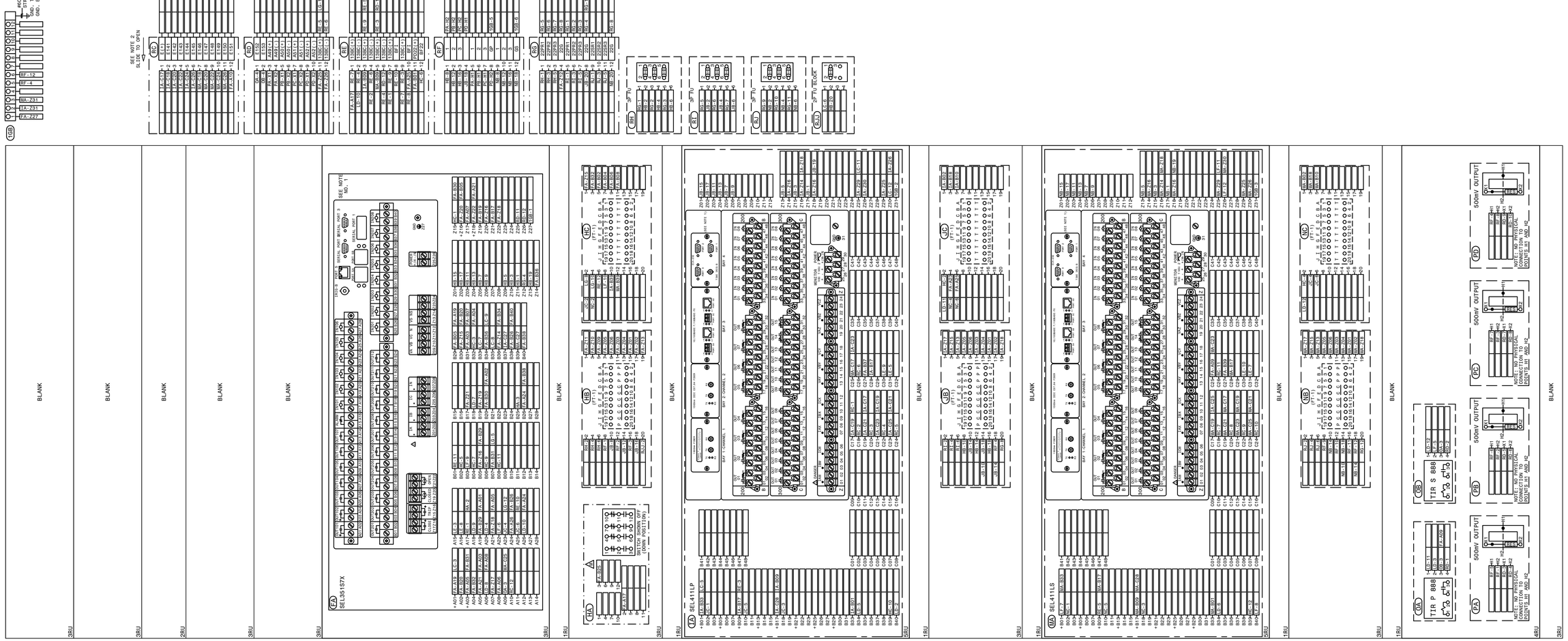

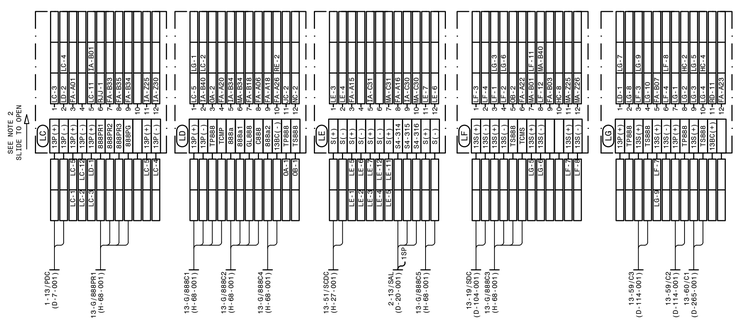

AUTOCAD ELECTRICAL

THIS DRAWING CONTAINS AUTOCAD ELECTRICAL ELEMENTS

NOTES:

1. FOR SERIAL CONNECTIONS, SEE COMMUNICATION DIAGRAM.
2. SLIDING LINKS TO OPEN TOWARD INTERNAL WIRING SIDE.

REFERENCES:

D-424-001	PANEL 13 FRONT VIEW AND NAMEPLATES
D-424-003	PANEL 13 DC ELEMENTARY DIAGRAM
D-424-004	PANEL 13 AC ELEMENTARY DIAGRAM
D-424-005	PANEL 13 LOGIC DIAGRAM (411L PRI)
D-424-006	PANEL 13 LOGIC DIAGRAM (411L SEC)
D-424-007	PANEL 13 LOGIC DIAGRAM (351S7X BF/RCLS)

PANEL #13, WIRING DIAG., TRANS. LINE 87L/DTT FIBER, STR. BUS

P.I.#1899807

BURNS McDONNELL
4004 SUMMIT BLVD., NE., SUITE 1200
ATLANTA, GA 30319
PHONE: (770)587-4776

Burns & McDonnell Engineering Co. Inc.
GA ENGINEERING LICENSE: PEF000100
EXPIRATION DATE: 6/30/2026

THE REGISTRANT OF THE NEWLY APPLIED SEAL, DATED XX/XX/2024, ONLY ASSUMES RESPONSIBILITY FOR THE CHANGES AS INDICATED BY THE FOLLOWING REVISIONS: 00-

GEORGIA POWER
A SOUTHERN COMPANY

FACILITY NAME:	MCGRAU FORD TS				
TITLE:	PANEL NO.13, WIRING DIAGRAM - MC. FORD BESS 230KV LINE SEL411L(PRI) FIB.LINE DIFF/DIST, SEL411L(SEC) FIB.LINE DIFF/DIST, SEL351S(BF/RCLS)				
DRAWN: EG/BMCD	TYPE: WD	FACILITY #: 01-173	NUMBER: D- 424	SHEET: - 002 -	REV: .A
CHECKED: SW/BMCD	SCALE: N.T.S.				
APPROVED: PI#1899807	BOM:				
DATE: 7/31/2024	ASC FACS:		ALT DWG NUM:		

LNP-SELP_H-35-001-07

PI: | PI: | PI: | PI: | PI: | PI: | PI: | PI:

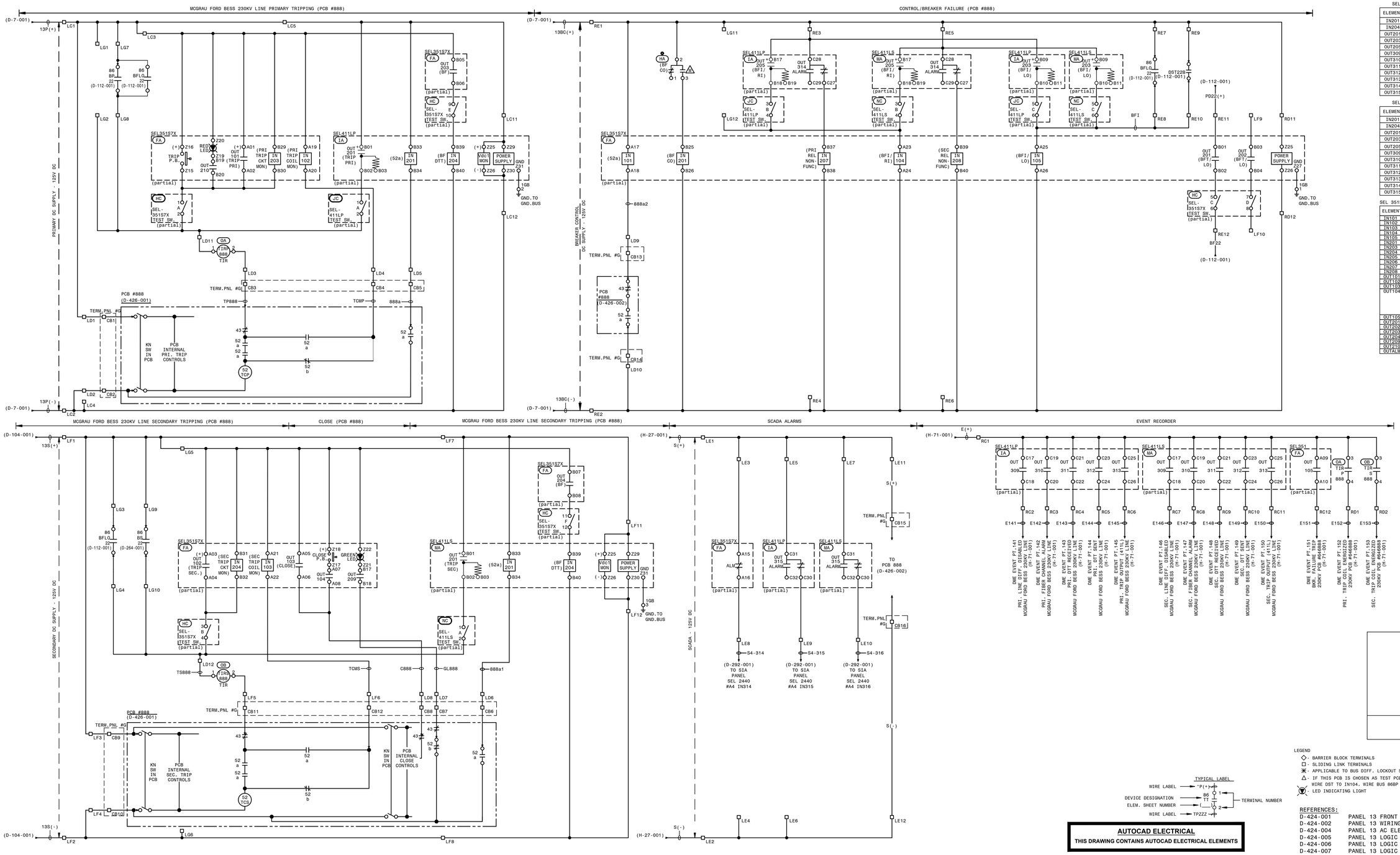

SEL 411LP (PRI. LINE DIFF) I/O ASSIGNMENTS

ELEMENT	FUNCTION
IN201	BREAKER 52a INPUT PCB #888
IN204	BF DTT/PERMISSIVE TRIP PCB #888
OUT201	TRIP (PCB #888 PRI. TRIP COIL)
OUT203	BF INITIATE / LOCKOUT (PCB #888)
OUT205	BF/RECLOSE INITIATE (PCB #888)
OUT309	PRI. LINE DIFF. DISABLED (DME)
OUT310	PRI. FIBER CHANNEL ALARM (DME)
OUT311	PRI. DTT RECEIVED (DME)
OUT312	PRI. DTT SENT (DME)
OUT313	PRI. TRIP OUTPUT (DME)
OUT314	RELAY NON-FUNCTIONAL
OUT315	RELAY FAILURE ALARM

SEL 411LS (SEC. LINE DIFF) I/O ASSIGNMENTS

ELEMENT	FUNCTION
IN201	BREAKER 52a INPUT PCB #888
IN204	BF DTT/PERMISSIVE TRIP PCB #888
OUT201	TRIP (PCB #888 SEC. TRIP COIL)
OUT203	BF INITIATE / LOCKOUT (PCB #888)
OUT205	BF/RECLOSE INITIATE (PCB #888)
OUT309	SEC. LINE DIFF. DISABLED (DME)
OUT310	SEC. FIBER CHANNEL ALARM (DME)
OUT311	SEC. DTT RECEIVED (DME)
OUT312	SEC. DTT SENT (DME)
OUT313	SEC. TRIP OUTPUT (DME)
OUT314	RELAY NON-FUNCTIONAL
OUT315	RELAY FAILURE ALARM

SEL 351S7X (CONTROL/BF/RCLS) I/O ASSIGNMENTS

ELEMENT	FUNCTION
IN101	BREAKER 52a INPUT
IN102	PRIMARY TRIP COIL MONITOR
IN103	SECONDARY TRIP COIL MONITOR
IN104	PROTECTIVE RELAY TRIP (BFI/B1)
IN105	EXTERNAL LOR TRIP INPUT (BFI/LO)
IN201	BREAKER FAILURE CUTOUT
IN203	PRI. TRIP CIRCUIT MONITOR
IN204	SEC. TRIP CIRCUIT MONITOR
IN205	PHASE 2 LINE VOLTAGE INPUT
IN206	PHASE 3 LINE VOLTAGE INPUT
IN207	MCGRAU FORD BESS PRI. PROT. RELAY NON-FUNCTIONAL
IN208	MCGRAU FORD BESS SEC. PROT. RELAY NON-FUNCTIONAL
OUT101	TRIP (PRIMARY TRIP COIL)
OUT102	TRIP (SECONDARY TRIP COIL)
OUT103	CLOSE
OUT104	PERMITS "BIG RED BUTTON" CLOSE IF NO HOT LINE TAG IS APPLIED AND IF BREAKER TRIP COIL, RELAY SELF-TEST ARE OKAY, & NO BF LOR OR OTHER LOR'S INPUTS ASSERTED
OUT105	BKR. FAIL. TRIP (DME)
OUT201	BKR. FAIL. TRIP & LOCKOUT PRI BUS DIFF
OUT202	BKR. FAIL. TRIP & LOCKOUT SEC BUS DIFF (NOT USED)
OUT203	BF TIME KEY DTT/ANTI-ISLANDING TO MCGRAU FORD BESS
OUT204	BF TIME KEY DTT/ANTI-ISLANDING TO MCGRAU FORD BESS
OUT209	OPENS GREEN LED ON RELAY
OUT210	OPENS RED LED ON RELAY
OUTALM	RELAY FAILURE ALARM

BF CO TOGGLE SWITCH MICRO SWITCH MS24525-23

CONTACTS	MAINTAINED POSITIONS UP (REMOTE CLOSED)	DOWN (LOCAL OPEN)
1-2		X
2-3	X	
4-5		X
5-6	X	
7-8		X
8-9	X	
10-11		X
11-12	X	

LEGEND
- ◇ - BARRIER BLOCK TERMINALS
- □ - SLIDING LINK TERMINALS
- ✳ - APPLICABLE TO BUS DIFF. LOCKOUT SCHEMES NO AUTO RESTORATION
- △ - IF THIS PCB IS CHOSEN AS TEST PCB FOR AUTO RESORATION, DO NOT WIRE DST TO IN104. WIRE BUS 86BP & BUS 86BS TO IN105.
- LED INDICATING LIGHT

TYPICAL LABEL: WIRE LABEL "P(+)"; DEVICE DESIGNATION 86 TT; ELEM. SHEET NUMBER (; WIRE LABEL TPZZZ; TERMINAL NUMBER 1, 2

AUTOCAD ELECTRICAL
THIS DRAWING CONTAINS AUTOCAD ELECTRICAL ELEMENTS

REFERENCES:

D-424-001	PANEL 13 FRONT VIEW AND NAMEPLATES
D-424-002	PANEL 13 WIRING DIAGRAM
D-424-004	PANEL 13 AC ELEMENTARY DIAGRAM
D-424-005	PANEL 13 LOGIC DIAGRAM (411L PRI)
D-424-006	PANEL 13 LOGIC DIAGRAM (411L SEC)
D-424-007	PANEL 13 LOGIC DIAGRAM (351S7X BF/RCLS)

P.I.#1899807

BURNS McDONNELL
4004 SUMMIT BLVD., NE, SUITE 1200
ATLANTA, GA 30319
PHONE: (770)587-4776

Burns & McDonnell Engineering Co. Inc.
GA ENGINEERING LICENSE: PEF000100
EXPIRATION DATE: 6/30/2026

THE REGISTRANT OF THE NEWLY APPLIED SEAL, DATED 30/06/2024, ONLY ASSUMES RESPONSIBILITY FOR THE CHANGES AS INDICATED BY THE FOLLOWING REVISIONS:NO.

LMP-SELP_D-33-001-05

PANEL 13, DC ELEMENTARY, TRANS. LINE D87L/DTT FIBER, STR. BUS

			PI:			PI:			PI:			PI:			PI:			PI:	

GEORGIA POWER — A SOUTHERN COMPANY

DRAWN: EG/BMCD	FACILITY NAME: MCGRAU FORD TS				
CHECKED: SW/BMCD	TITLE: PANEL NO.13, DC ELEM. - MC. FORD BESS 230KV LINE SEL411L (PRI-FIB LINE DIFF/DIST.), SEL411L (SEC-FIB LINE DIFF/DIST.), SEL351S (BF/RCLS				
APPROVED: PI#1899807	TYPE: 52	FACILITY #: 01-173	NUMBER: D- 424	SHEET: - 003 --	REV: .A
DATE: 7/31/2024	SCALE: N.T.S.				
	BOM:				
	ASC FACS:				ALT DWG NUM:

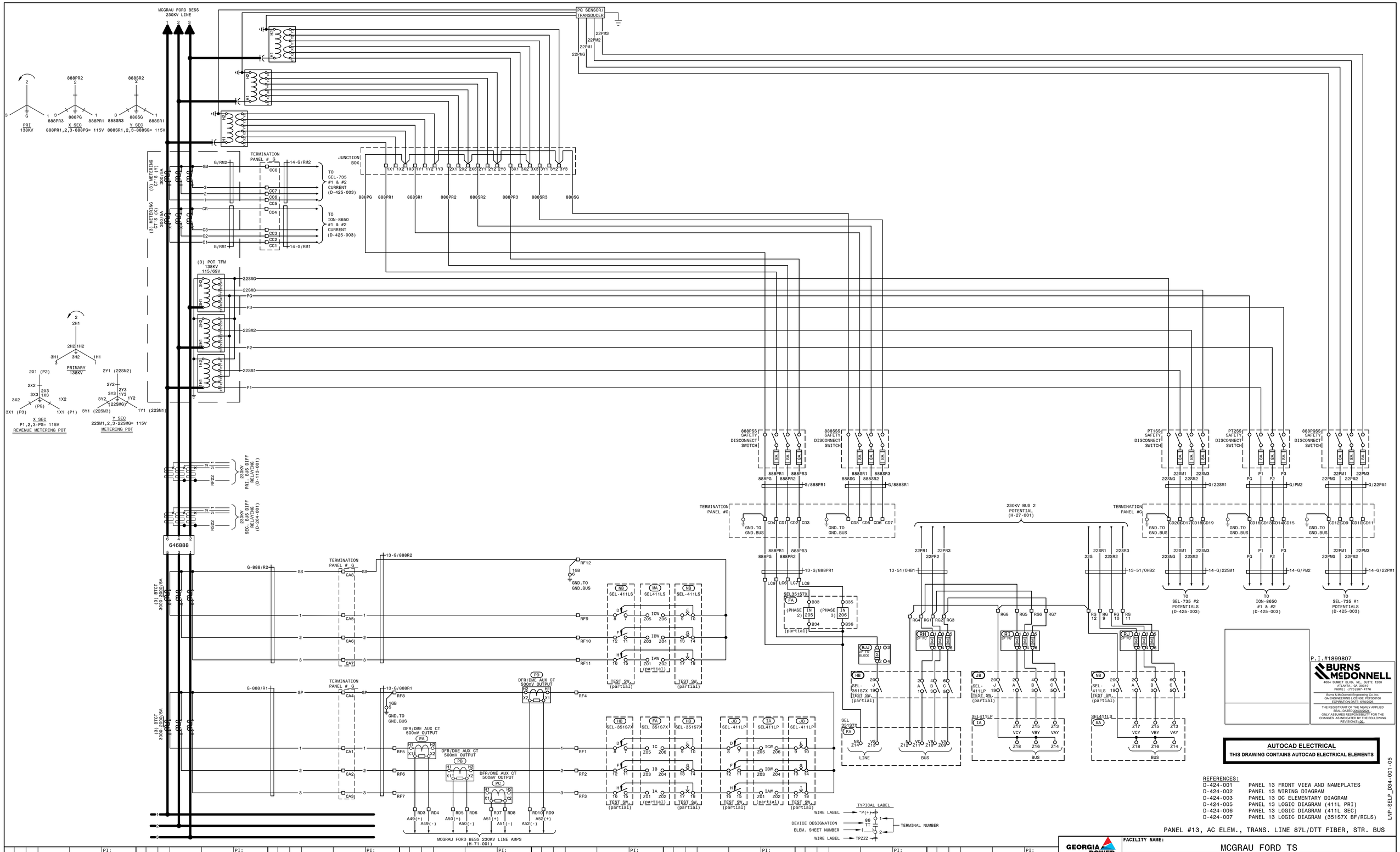

P.I.#1899807

BURNS McDONNELL
8004 SUMMIT BLVD. NE, SUITE 1200
ATLANTA, GA 30319
PHONE: (770)587-4776

Burns & McDonnell Engineering Co. inc.
GA ENGINEERING LICENSE: PEF000100
EXPIRATION DATE: 6/30/2026

THE REGISTRANT OF THE NEWLY APPLIED SEAL DATED 7/31/2024 ONLY ASSUMES RESPONSIBILITY FOR THE CHANGES AS INDICATED BY THE FOLLOWING REVISIONS:0,

AUTOCAD ELECTRICAL

THIS DRAWING CONTAINS AUTOCAD ELECTRICAL ELEMENTS

REFERENCES:

D-424-001	PANEL 13 FRONT VIEW AND NAMEPLATES
D-424-002	PANEL 13 WIRING DIAGRAM
D-424-003	PANEL 13 DC ELEMENTARY DIAGRAM
D-424-005	PANEL 13 LOGIC DIAGRAM (411L PRI)
D-424-006	PANEL 13 LOGIC DIAGRAM (411L SEC)
D-424-007	PANEL 13 LOGIC DIAGRAM (351S7X BF/RCLS)

PANEL #13, AC ELEM., TRANS. LINE 87L/DTT FIBER, STR. BUS

LNP-SELP_D34-001-05

	PI:		PI:		PI:		PI:		PI:		PI:		PI:

GEORGIA POWER
A SOUTHERN COMPANY

DRAWN: EG/BMCD	FACILITY NAME: MCGRAU FORD TS				
CHECKED: SW/BMCD	TITLE: PANEL NO.13, AC ELEM.-MC. FORD BESS 230KV LINE SEL411L (PRI-FIB. LINE DIFF/DIST.), SEL411L (SEC-FIB. LINE DIFF/DIST.), SEL351S(BF/RCLS)				
APPROVED: PI#1899807	TYPE: 52	FACILITY #: 01-173	NUMBER: D- 424	SHEET: - 004 -	REV: .A
DATE: 7/31/2024	SCALE: N.T.S.				
	BOM:				
	ASC FACS:				ALT DWG NUM:

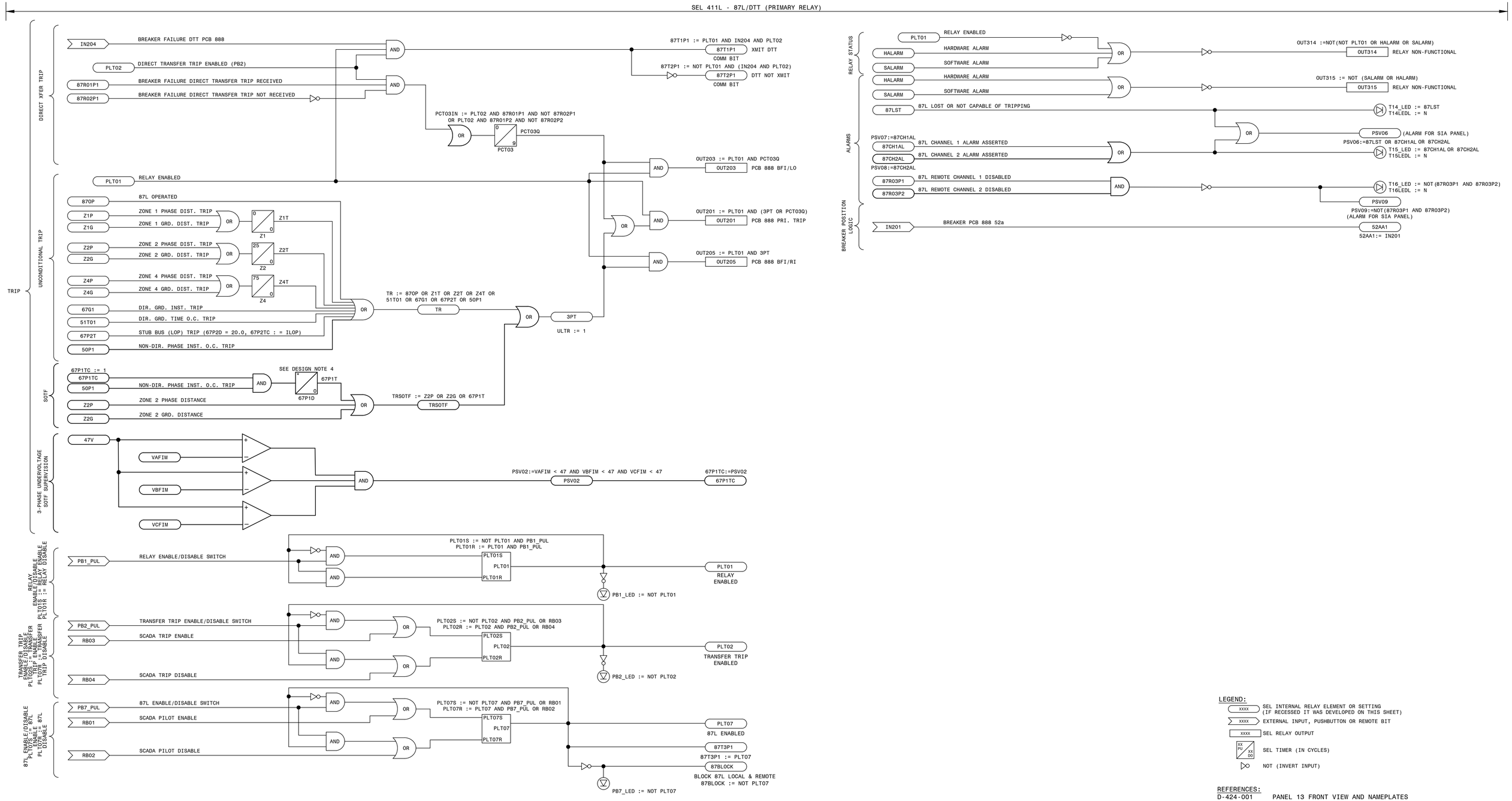

LEGEND:

- XXXX — SEL INTERNAL RELAY ELEMENT OR SETTING (IF RECESSED IT WAS DEVELOPED ON THIS SHEET)
- XXXX — EXTERNAL INPUT, PUSHBUTTON OR REMOTE BIT
- XXXX — SEL RELAY OUTPUT
- XX PU / XX DO — SEL TIMER (IN CYCLES)
- NOT (INVERT INPUT)

REFERENCES:

D-424-001	PANEL 13 FRONT VIEW AND NAMEPLATES
D-424-002	PANEL 13 WIRING DIAGRAM
D-424-003	PANEL 13 DC ELEMENTARY DIAGRAM
D-424-004	PANEL 13 AC ELEMENTARY DIAGRAM
D-424-006	PANEL 13 LOGIC DIAGRAM (411L SEC)
D-424-007	PANEL 13 LOGIC DIAGRAM (351S7X BF/RCLS)

ALIAS NOTES:

THE FOLLOWING LIST PROVIDES ALTERNATE LOGIC EQUATIONS IF ELEMENT ALIASES ARE NOT USED.

1. T2_LED := PCT01Q AND NOT (TLED_1 OR TLED_4)
2. T5_LED := (Z1P OR Z1G OR 67G1) AND NOT (TLED_6 OR TLED_7)
3. T6_LED := (Z2P OR Z2G) AND NOT (Z1P OR Z1G OR 67G1 OR TLED_5 OR TLED_7)
4. T7_LED := (Z3P OR Z3G) AND NOT (Z1P OR Z2P OR Z1G OR Z2G OR 67G1 OR TLED_5 OR TLED_6)
5. T21_LED := (67G1 OR 67P1) AND NOT TLED_22
6. T22_LED := 51S1T AND NOT (67G1 OR 67P1 OR TLED_21)

PRELIMINARY DESIGN
INFORMATION CONTAINED WITHIN THIS PRELIMINARY DESIGN PACKAGE IS SUBJECT TO CHANGE.
NOT FOR CONSTRUCTION

LNP-SELP.D.36.001.06

TRANS. LINE PRIMARY 87L/DTT FIBER LOGIC - STRAIGHT BUS

GEORGIA POWER A SOUTHERN COMPANY	FACILITY NAME: MCGRAU FORD TS		
DRAWN: EG/BMCD	TITLE: PANEL NO.13, LOGIC DIAGRAM - MCGRAU FORD BESS 230KV LINE SEL411L (PRI-FIB. LINE DIFF/DIST.), STRAIGHT BUS		
CHECKED: SW/BMCD	TYPE: S2L	FACILITY #: 01-173	NUMBER: D-424 SHEET: - 005 REV: -.A
APPROVED: PI#1899807	SCALE: N.T.S.		
DATE: 7/31/2024	BOM:		
	ASC FACS:		ALT DWG NUM:

PI: PI: PI: PI: PI: PI: PI: PI:

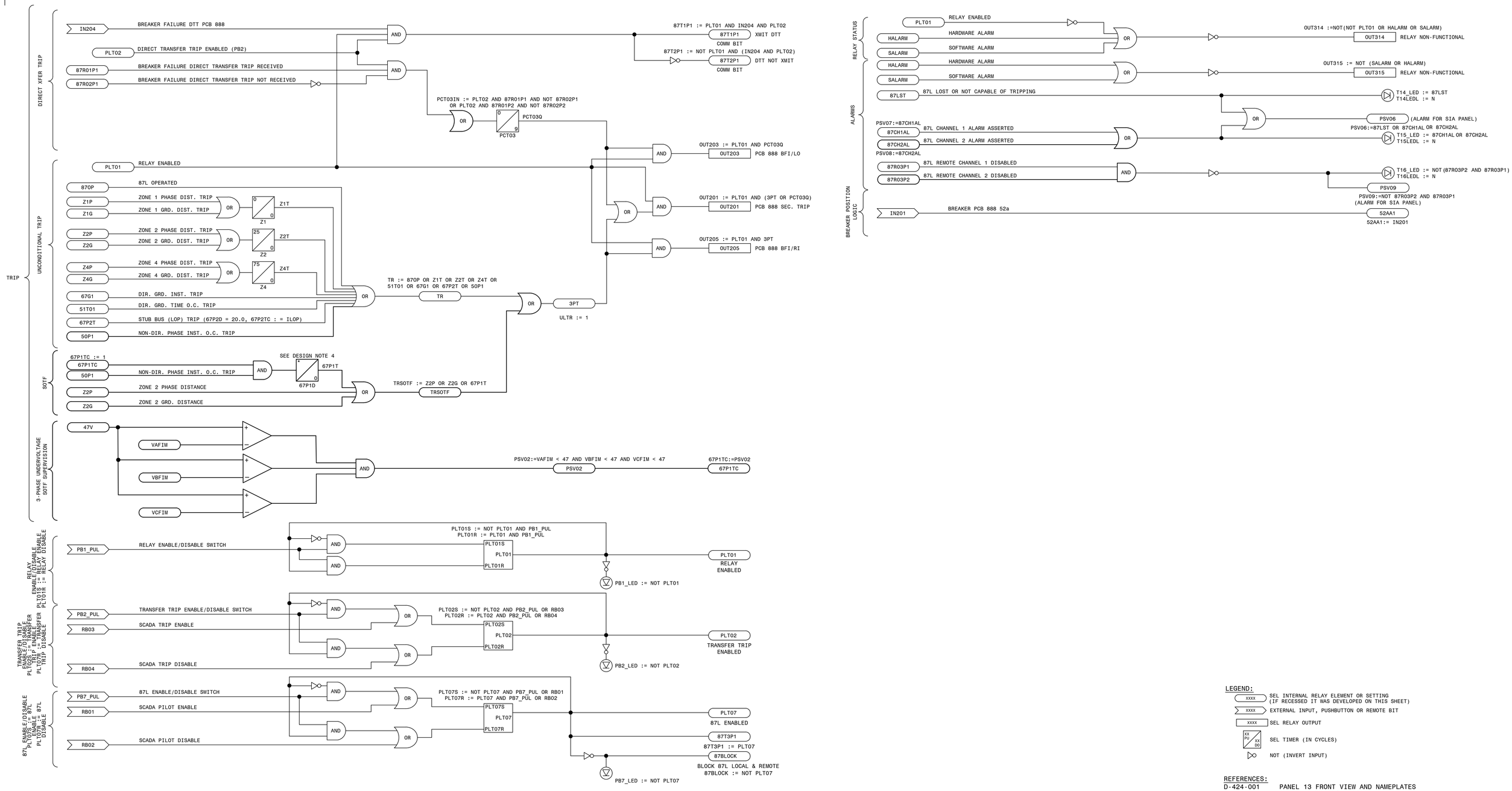

LEGEND:

- XXXX — SEL INTERNAL RELAY ELEMENT OR SETTING (IF RECESSED IT WAS DEVELOPED ON THIS SHEET)
- XXXX — EXTERNAL INPUT, PUSHBUTTON OR REMOTE BIT
- XXXX — SEL RELAY OUTPUT
- XX PU / XX DO — SEL TIMER (IN CYCLES)
- NOT (INVERT INPUT)

REFERENCES:

D-424-001	PANEL 13 FRONT VIEW AND NAMEPLATES
D-424-002	PANEL 13 WIRING DIAGRAM
D-424-003	PANEL 13 DC ELEMENTARY DIAGRAM
D-424-004	PANEL 13 AC ELEMENTARY DIAGRAM
D-424-005	PANEL 13 LOGIC DIAGRAM (411L PRI)
D-424-007	PANEL 13 LOGIC DIAGRAM (351S7X BF/RCLS)

ALIAS NOTES:

THE FOLLOWING LIST PROVIDES ALTERNATE LOGIC EQUATIONS IF ELEMENT ALIASES ARE NOT USED.

1. T2_LED := PCT01Q AND NOT (TLED_1 OR TLED_4)
2. T5_LED := (Z1P OR Z1G OR 67G1) AND NOT (TLED_6 OR TLED_7)
3. T6_LED := (Z2P OR Z2G) AND NOT (Z1P OR Z1G OR 67G1 OR TLED_5 OR TLED_7)
4. T7_LED := (Z3P OR Z3G) AND NOT (Z1P OR Z2P OR Z1G OR Z2G OR 67G1 OR TLED_5 OR TLED_6)
5. T21_LED := (67G1 OR 67P1) AND NOT TLED_22
6. T22_LED := 51S1T AND NOT (67G1 OR 67P1 OR TLED_21)

PRELIMINARY DESIGN
INFORMATION CONTAINED WITHIN THIS PRELIMINARY DESIGN PACKAGE IS SUBJECT TO CHANGE.
NOT FOR CONSTRUCTION

LNP-SELP-D-37-001-05

TRANS. LINE SECONDARY 87L/DTT FIBER LOGIC - STRAIGHT BUS

GEORGIA POWER A SOUTHERN COMPANY	FACILITY NAME: MCGRAU FORD TS		
DRAWN: EG/BMCD	TITLE: PANEL NO.13, LOGIC DIAGRAM - MCGRAU FORD BESS 230KV LINE SEL411L (SEC-FIB. LINE DIFF/DIST.), STRAIGHT BUS		
CHECKED: SW/BMCD	TYPE: 52L	FACILITY #: 01-173	NUMBER: D-424 / SHEET: -006- / REV: .A
APPROVED: PI#1899807	SCALE: N.T.S.		
DATE: 7/31/2024	BOM:		
	ASC FACS:	ALT DWG NUM:	

PI: PI: PI: PI: PI: PI: PI: PI:

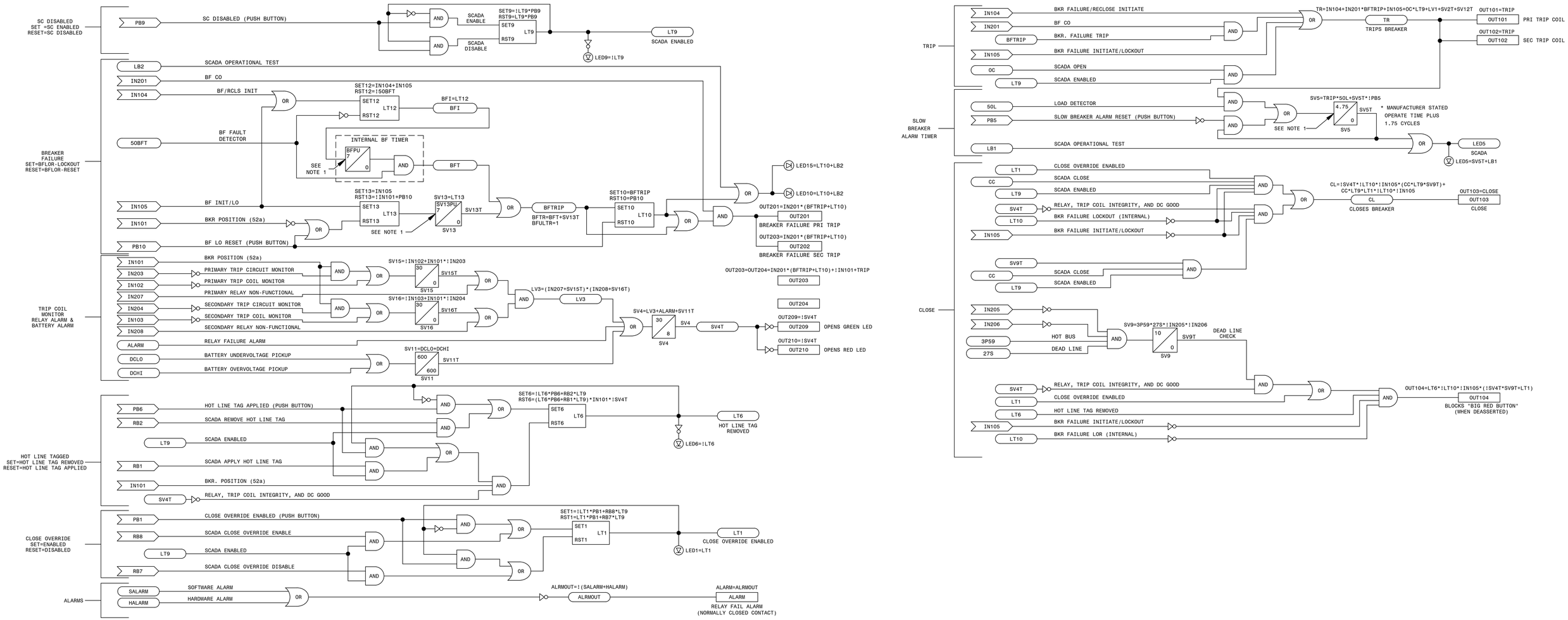

NOTES:

1. SETTINGS MAY VARY FOR EACH APPLICATION.

LEGEND:

XXXX	SEL INTERNAL RELAY ELEMENT OR SETTING (IF RECESSED IT WAS DEVELOPED ON THIS SHEET)
XXXX	EXTERNAL INPUT, PUSHBUTTON OR REMOTE BIT
XXXX	SEL RELAY OUTPUT
XX PU / XX DO	SEL TIMER (IN CYCLES)
	NOT (INVERT INPUT)
EDGE+	RISING EDGE
EDGE-	FALLING EDGE

REFERENCES:

D-424-001	PANEL 13 FRONT VIEW AND NAMEPLATES
D-424-002	PANEL 13 WIRING DIAGRAM
D-424-003	PANEL 13 DC ELEMENTARY DIAGRAM
D-424-004	PANEL 13 AC ELEMENTARY DIAGRAM
D-424-005	PANEL 13 LOGIC DIAGRAM (411L PRI)
D-424-006	PANEL 13 LOGIC DIAGRAM (411L SEC)

PRELIMINARY DESIGN
INFORMATION CONTAINED WITHIN THIS PRELIMINARY
DESIGN PACKAGE IS SUBJECT TO CHANGE.
NOT FOR CONSTRUCTION

LNP-SELP.D.38.001.03

TRANS. LINE 87L/DTT FIBER, BF/RCLS LOGIC - STRAIGHT BUS

GEORGIA POWER
A SOUTHERN COMPANY

FACILITY NAME:	MCGRAU FORD TS
TITLE:	PANEL NO.13, LOGIC DIAGRAM - MCGRAU FORD 230KV LINE SEL351S (BF/RCLS) REL., STRAIGHT BUS
DRAWN: EG/BMCD	TYPE: 52L
CHECKED: SW/BMCD	FACILITY #: 01-173
APPROVED: PI#1899807	SCALE: N.T.S.
DATE: 7/31/2024	BOM:
ASC FACS:	
NUMBER:	D- 424
SHEET:	- 007
REV:	-.A
ALT DWG NUM:	

PI: PI: PI: PI: PI: PI: PI: PI:

NAMEPLATE DETAILS			
NAMEPLATE NO.	FIRST LINE	SECOND LINE	THIRD LINE
1	PANEL NO. 14		DWG. NO. 01-173-D425
2	PANEL NO. 14		DWG. NO. 01-173-D425
3	SEL-735 METER #1	230KV	POWER QUALITY PQ-SENSOR
4	SEL-735 METER #2	230KV	SYSTEM METERING
5	SEL-735 METER #2	230KV	SYSTEM METERING
6	SEL-735 METER #1	230KV	POWER QUALITY PQ-SENSOR
7	REVENUE METER #1	230KV	
8	REVENUE METER #1	230KV	
9	REVENUE METER #2	230KV	
10	REVENUE METER #2	230KV	

(735 CONFIGURABLE LABELS)

DETAIL H1

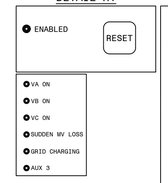

DETAIL H

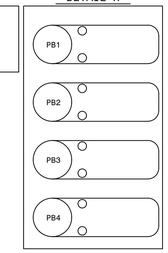

QTY	ITEMS	CATALOG	DESCRIPTION	REMARKS
1	AA	RHCL-I	27IN X 90IN SWITCHBOARD PANEL (FULL RACK) WITH FRAME	DWG-PAN-CONST-D1, DWG-PAN-CONST-D2
1	AB	RGWT-I	RACK PANEL TYPE A 1-RACK UNIT	DWG-PAN-CONST-D1
3	AD	RGWV-I	RACK PANEL TYPE B 3-RACK UNITS	DWG-PAN-CONST-D1
4	AE	RGWW-I	RACK PANEL TYPE B 4-RACK UNITS	DWG-PAN-CONST-D1
1	AF	RGWX-I	RACK PANEL TYPE B 5-RACK UNITS	DWG-PAN-CONST-D1
2	AG	RGWZ-I	RACK PANEL TYPE C 7-RACK UNITS	DWG-PAN-CONST-D1
2	AH	RUAB	RELAY, SEL-735, METER, ADVANCED PQ, SS OUTPUTS	SEL #0735AX20944CFXA4XX16101XX
1	AI	RIFY	2-10 POLE TYPE FT-1 SWITCHES, POS. A: (P P P C-C C-C C-C P), POS. B:(BLANK), POS. C:(P P P C-C C-C C-C P)	ABB #FS3G014000014M
2	AK	BRBU	FLUSH MOUNT PANEL ADAPTER FOR FORM9 METERS	SUSI ADAPTERS #SWAAF9
2	AL	SZGZ	1-10 POLE TYPE SJK SWITCH (P C-C P C-C P C-C P)	STATES #70K10-E-B
5	AM	BJPE-I	12 POLE SLIDING LINK TERMINAL BLOCK	STATES ELECTRIC MFG: M-25012-T
5	AN	FUPF	FUSE BLOCK, PHENOL,2-POLE,1-30A	BUSSMANN: H25030-2SR
12	AO	RFVM	FUSE,CARTRIDGE,1ELEM,NR,250V,6A	BUSSMANN: KTN-6/R-11630
2	AP	TVVU	TUBE COPPER 1/4 IPS X 2", 30 AMP SIZE	
2	AQ	FUPH	FUSE BLOCK, PHENOL,3-POLE,1-30A	BUSSMANN: H25030-3S
2	AR	FUVM	FUSE, CARTRIDGE, DUAL ELEMENT, TIME DELAY, CURRENT LIMITING, 3 AMP, 250V	BUSSMANN: FRN-R-3
1	AS	BAVD-I	COPPER NEUTRAL BAR GRD TERM, #4-#14	BURNDY: K12P4CG1
1	AT	RHZO-I	19" RACK MOUNT OUTLET STRIP	1582H6A1

(FRONT)

INTERNAL TOP VIEW

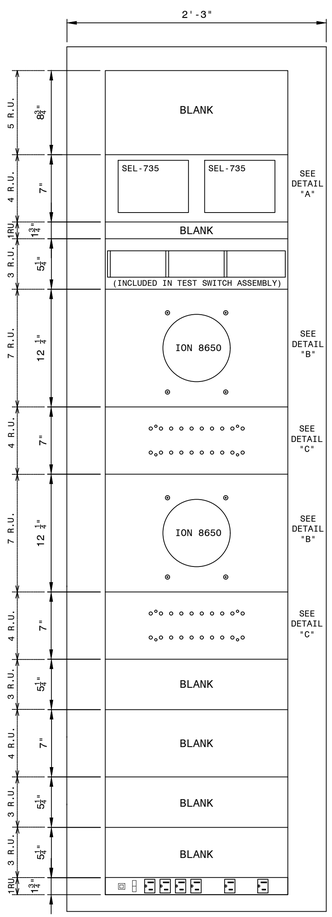

FRONT PANEL
(PUNCH MARKS)

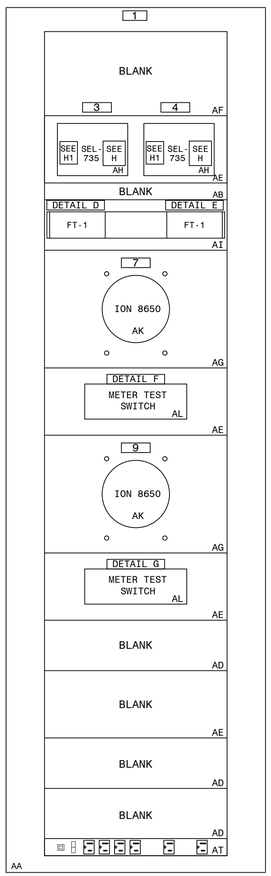

FRONT PANEL
(NAMEPLATES, TARGETS AND MATERIAL MARKS)

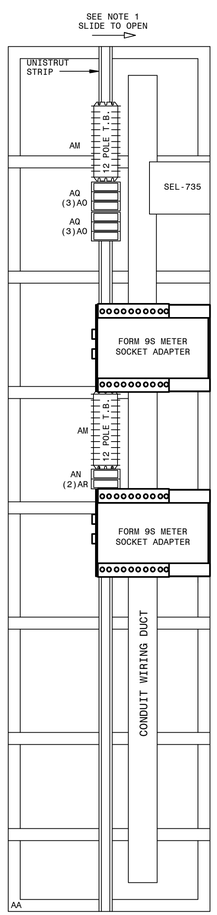

LEFT REAR

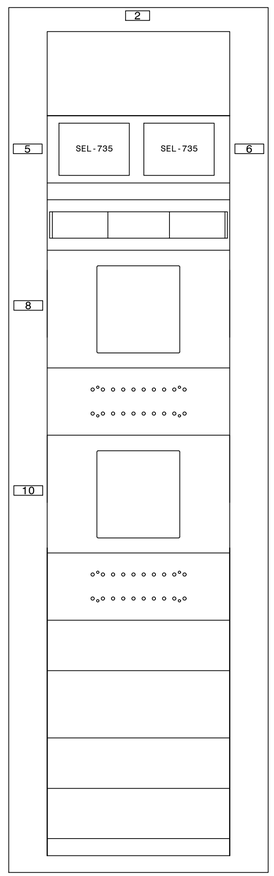

REAR PANEL
INTERNAL PANEL REAR VIEW

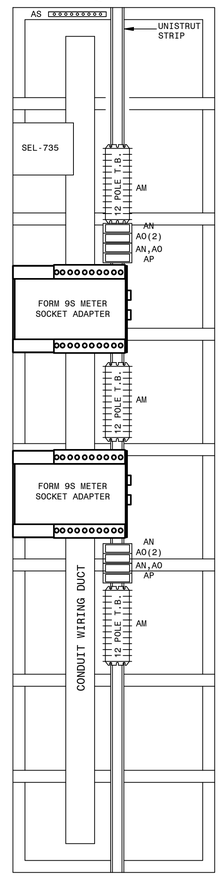

RIGHT REAR

DETAIL "A"

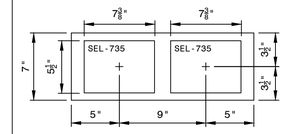

DETAIL "B"
ION 8650 W/ADAPTER SOCKET

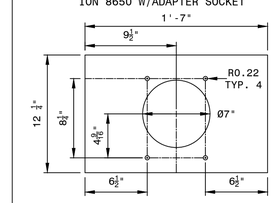

DETAIL "C"
REVENUE METER TEST SWITCH CUTOUT

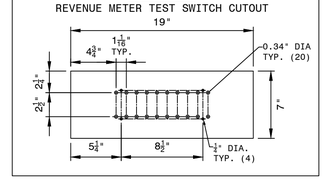

DETAIL D

TEST SWITCH (735 #1)

V1	V2	V3	I1+	I1	I2+	I2	I3+	I3	VN
A	B	C	D	E	F	G	H	I	J

DETAIL E

TEST SWITCH (735 #2)

V1	V2	V3	I1+	I1	I2+	I2	I3+	I3	VN
A	B	C	D	E	F	G	H	I	J

DETAIL F

TEST SWITCH (REV MTR)

V1	I1+	I1	V2	I2+	I2	V3	I3+	I3	VN
A	B	C	D	E	F	G	H	I	J

DETAIL G

TEST SWITCH (BU REV MTR)

V1	I1+	I1	V2	I2+	I2	V3	I3+	I3	VN
A	B	C	D	E	F	G	H	I	J

AUTOCAD ELECTRICAL
THIS DRAWING CONTAINS AUTOCAD ELECTRICAL ELEMENTS

REFERENCES:
D-425-002 PANEL 14 WIRING DIAGRAM
D-425-003 PANEL 14 AC/DC ELEMENTARY
D-425-004 PANEL 14 LOGIC DIAGRAM
PAN-CONST_D1
PAN-CONST_D2

NOTES:
1. SLIDING LINKS TO OPEN TOWARD INTERNAL WIRING SIDE.

P.I.#1899807

BURNS McDONNELL
4004 SUMMIT BLVD., NE., SUITE 1200
ATLANTA, GA 30319
PHONE: (770)587-4776
Burns & McDonnell Engineering Co. Inc.
GA ENGINEERING LICENSE: PEF000100
EXPIRATION DATE: 6/30/2026
THE REGISTRANT OF THE NEWLY APPLIED SEAL, DATED XX/XX/2024, ONLY ASSUMES RESPONSIBILITY FOR THE CHANGES AS INDICATED BY THE FOLLOWING REVISIONS:

SGEN-POM_D-1-001-02

FRONT VIEW, TRANS. REVENUE AND PQ METERING PANEL 14

GEORGIA POWER
A SOUTHERN COMPANY

FACILITY NAME: MCGRAU FORD TS					
TITLE: PANEL NO.14, FRONT VIEW - TRANSMISSION REVENUE AND PQ METERING					
DRAWN: EG/BMCD					
CHECKED: SW/BMCD	TYPE: FV	FACILITY #: 01-173	NUMBER: D- 425	SHEET: - 001	REV: -.A
APPROVED: PI#1899807	SCALE: 1-1/2" = 1-0"				
DATE: 8/14/2024	BOM:				
	ASC FACS:		ALT DWG NUM:		

PI: PI: PI: PI: PI: PI: PI:

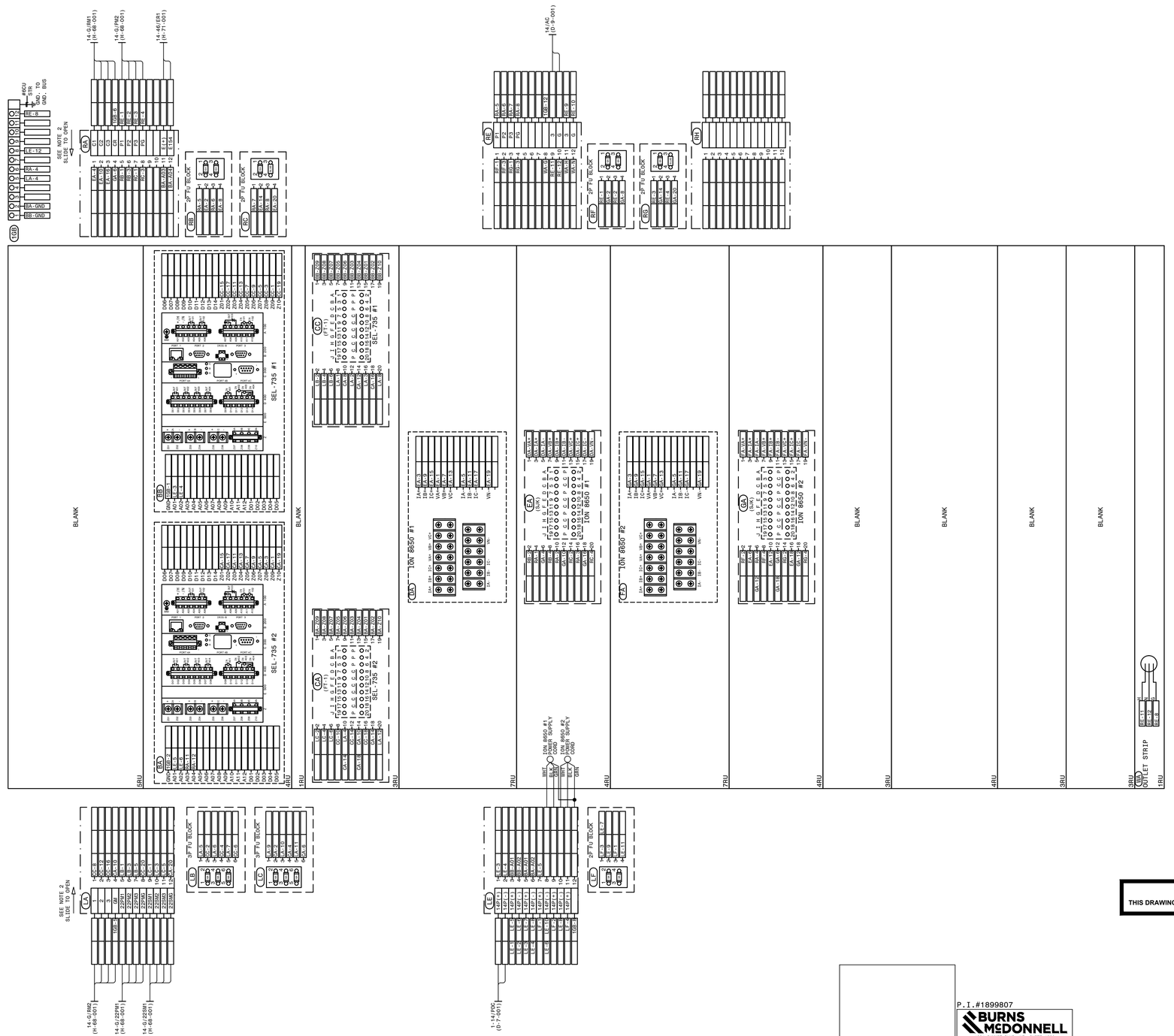

AUTOCAD ELECTRICAL

THIS DRAWING CONTAINS AUTOCAD ELECTRICAL ELEMENTS

REFERENCES:

D-425-001	PANEL 14 FRONT VIEW
D-425-003	PANEL 14 AC/DC ELEMENTARY
D-425-004	PANEL 14 LOGIC DIAGRAM

NOTES:

1. FOR DATA CONNECTIONS, SEE COMMUNICATION DIAGRAM.
2. SLIDING LINKS TO OPEN TOWARD INTERNAL WIRING SIDE.

SGEN:PQM_H-1-002-03

P.I.#1899807

BURNS McDONNELL
400N SUMMIT BLVD., NE, SUITE 1200
ATLANTA, GA 30319
PHONE: (770)387-4776

Burns & McDonnell Engineering Co. Inc.
GA ENGINEERING LICENSE: PEF002100
EXPIRATION DATE: 6/30/2026

THE REGISTRANT OF THE NEWLY APPLIED SEAL DATED 00/00/0000,
ONLY ASSUMES RESPONSIBILITY FOR THE CHANGES AS INDICATED BY THE FOLLOWING REVISIONS(S):

PI: | PI: | PI: | PI: | PI: | PI: | PI:

WIRING DIAGRAM, TRANS. REVENUE AND PQ METERING PANEL 14

GEORGIA POWER
A SOUTHERN COMPANY

FACILITY NAME:	MCGRAU FORD TS		
TITLE:	PANEL NO.14, WIRING DIAGRAM - TRANSMISSION REVENUE AND PQ METERING		
DRAWN: EQ/BMCD	TYPE: WD	FACILITY #: 01-173	NUMBER: D- 425
CHECKED: SW/BMCD	SCALE: N.T.S.		SHEET: - 002 -
APPROVED: PI#1899807	BOM:		REV: .A
DATE: 8/14/2024	ASC FACS:		ALT DWG NUM:

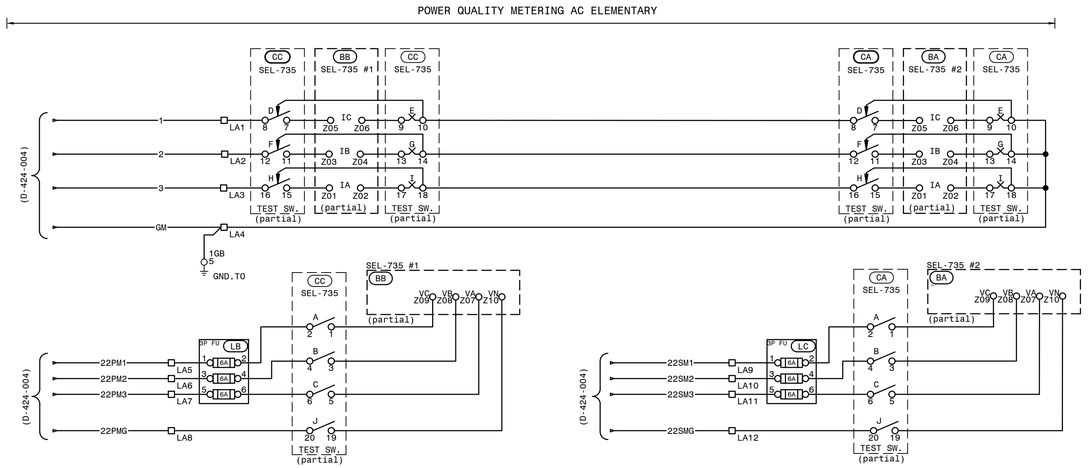

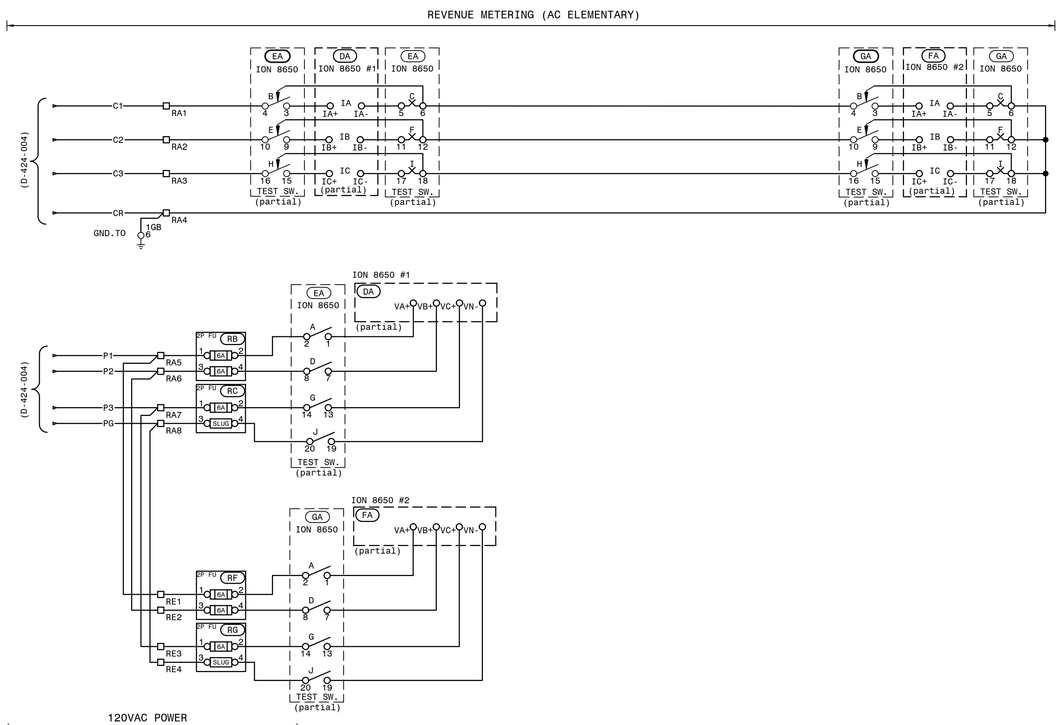

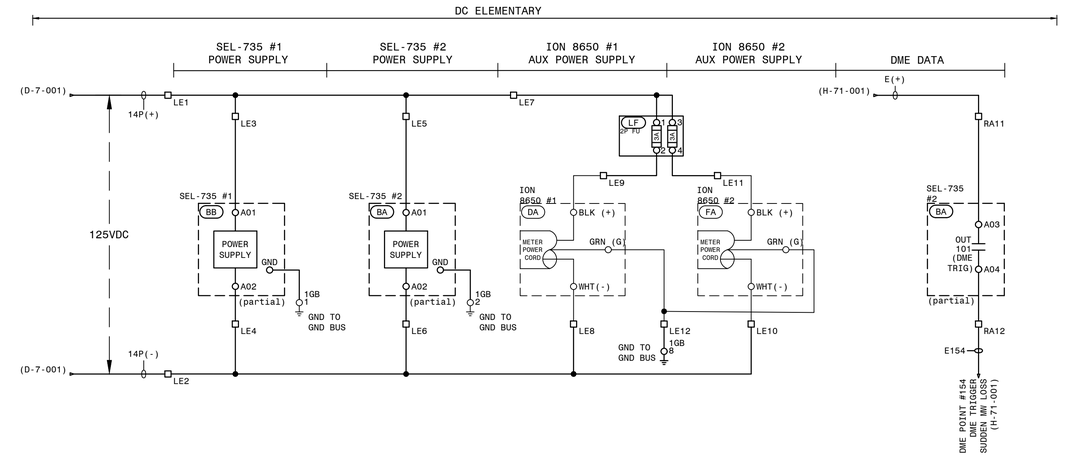

TYPICAL LABEL

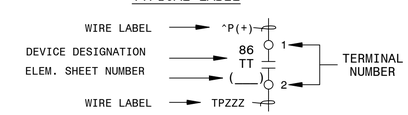

REFERENCES:

D-425-001	PANEL 14 FRONT VIEW
D-425-002	PANEL 14 WIRING DIAGRAM
D-425-004	PANEL 14 LOGIC DIAGRAM

AUTOCAD ELECTRICAL

THIS DRAWING CONTAINS AUTOCAD ELECTRICAL ELEMENTS

P.I.#1899807

BURNS McDONNELL
400N SUMMIT BLVD., NE, SUITE 1200
ATLANTA, GA 30319
PHONE: (770)1487-4776

Burns & McDonnell Engineering Co. Inc.
GA ENGINEERING LICENSE: PEF002100
EXPIRATION DATE: 6/30/2026

THE REGISTRANT OF THE NEWLY APPLIED SEAL DATED 00/00/0000, ONLY ASSUMES RESPONSIBILITY FOR THE CHANGES AS INDICATED BY THE FOLLOWING REVISIONS(): No

SGEN-POM_D-1-003-03

AC/DC ELEMENTARY, TRANS. REVENUE & PQ METERING PANEL 14

GEORGIA POWER
A SOUTHERN COMPANY

FACILITY NAME:	MCGRAU FORD TS				
TITLE:	PANEL NO.14, AC/DC ELEMENTARY - TRANSMISSION REVENUE AND POWER QUALITY METERING				
DRAWN: EQ/BMCD	TYPE: 52	FACILITY #: 01-173	NUMBER: D- 425	SHEET: - 003 -	REV: -.A
CHECKED: SW/BMCD	SCALE: N.T.S.				
APPROVED: PI#1899807	BOM:				
DATE: 8/14/2024	ASC FACS:		ALT DWG NUM:		

PI: PI: PI: PI: PI: PI: PI: PI:

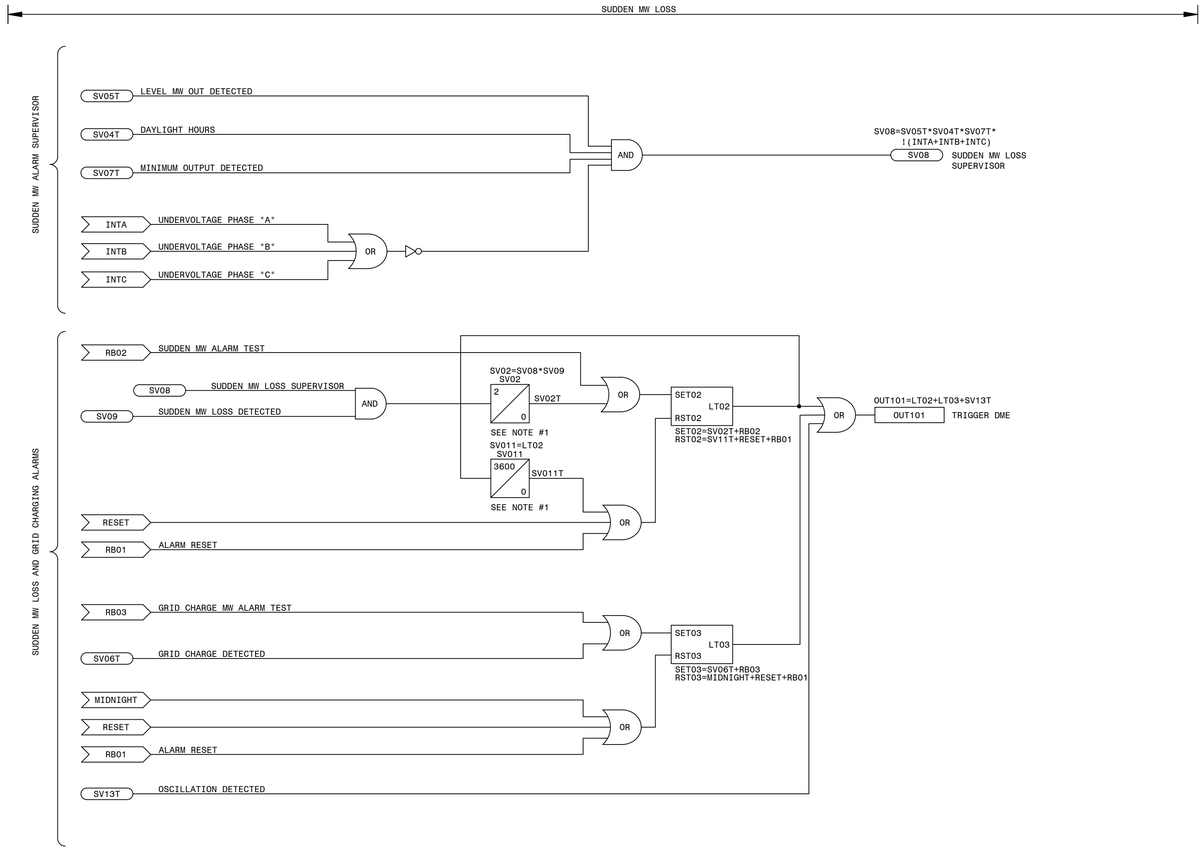

NOTE:
1. SEL-735P TIMER UNITS ARE SECONDS.

LEGEND:

- XXXX — SEL INTERNAL RELAY ELEMENT OR SETTING (IF RECESSED IT WAS DEVELOPED ON THIS SHEET)
- XXXX — EXTERNAL INPUT, PUSHBUTTON OR REMOTE BIT
- XXXX — SEL RELAY OUTPUT
- XX PU / XX DO — SEL TIMER (IN CYCLES)
- NOT (INVERT INPUT)

REFERENCES:

D-425-001	PANEL 14 FRONT VIEW
D-425-002	PANEL 14 WIRING DIAGRAM
D-425-003	PANEL 14 AC/DC ELEMENTARY

PRELIMINARY DESIGN
INFORMATION CONTAINED WITHIN THIS PRELIMINARY
DESIGN PACKAGE IS SUBJECT TO CHANGE.
NOT FOR CONSTRUCTION

SGEN-PQM_D-1-004-00

LOGIC DIAGRAM, TRANS. REVENUE & PQ METERING PANEL 14

GEORGIA POWER A SOUTHERN COMPANY	FACILITY NAME: MCGRAU FORD TS				
	TITLE: PANEL NO.14, LOGIC DIAGRAM - TRANSMISSION REVENUE AND POWER QUALITY METERING				
DRAWN: EG/BMCD					
CHECKED: SW/BMCD	TYPE: 52L	FACILITY #: 01-173	D-	NUMBER: 425	SHEET: - 004 -	REV: -.A
APPROVED: PI#1899807	SCALE: N.T.S.				
DATE: 8/14/2024	BOM:				
	ASC FACS:			ALT DWG NUM:	

PI: PI: PI: PI: PI: PI: PI: PI:

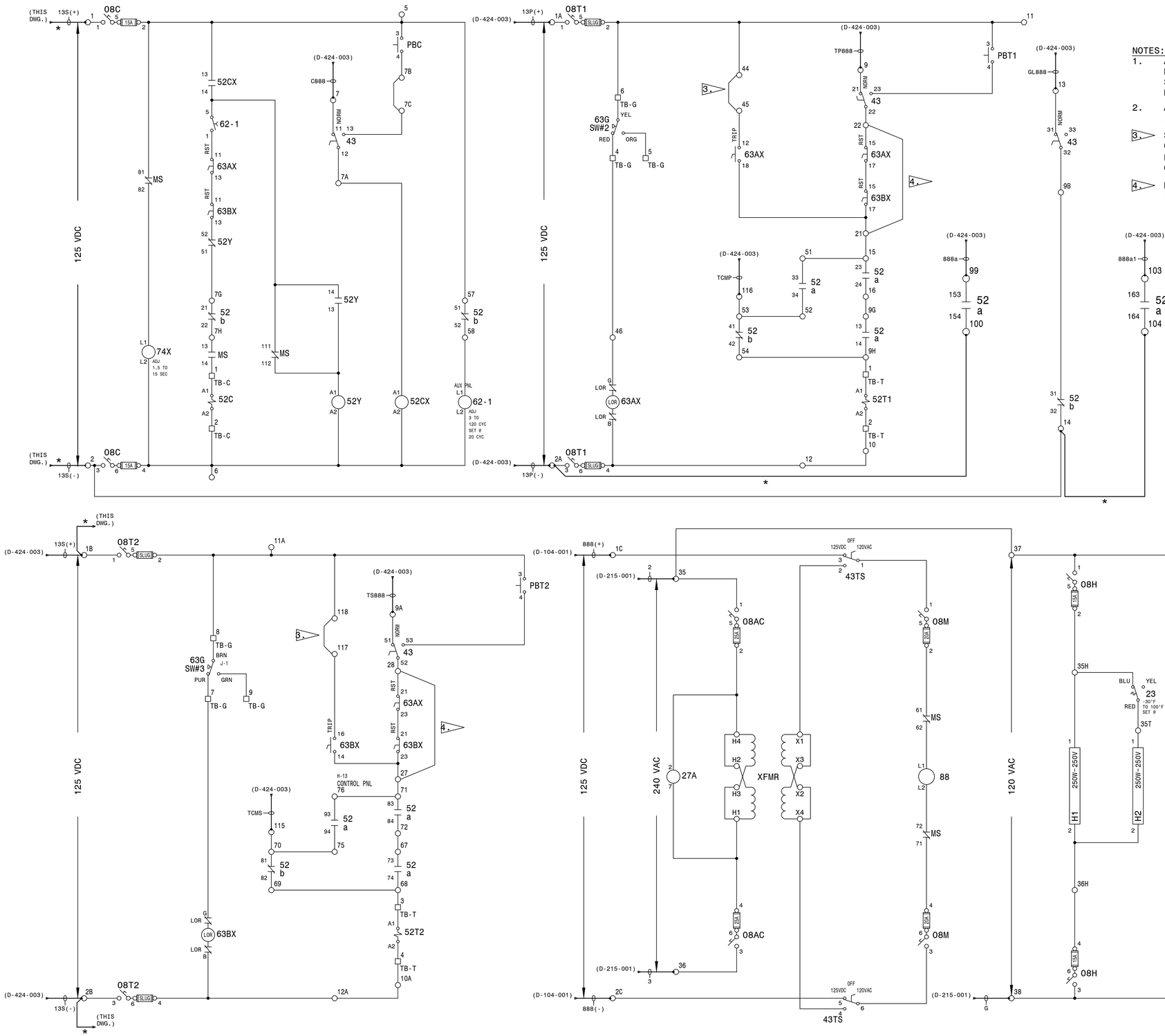

NOTES:

1. ALL EQUIPMENT SHOWN WITH: CIRCUIT BREAKER OPEN, CONTROL VOLTAGE OFF, SF6 PRESSURE LOW, SPRING DISCHARGED, TEMPERATURE LOW.
2. ALL BREAKER AUXILIARY SWITCHES SHOWN AS: (a=OPEN/BKR OPEN b=CLOSED/BKR OPEN)
3. SCHEME AS SHOWN WILL TRIP & BLOCK CLOSE ON LOW GAS PRESSURE. REMOVE JUMPER TO BLOCK TRIP & BLOCK CLOSE ON LOW GAS PRESSURE.
4. BREAKER WILL NOT LOCKOUT WITH JUMPER IN PLACE.

CONSTRUCTION NOTE:

1. *INDICATES FIELD WIRING

REFERENCES

D-426-002	230KV PCB 646888 (CO.#B19453) ELEMENTARY DIAGRAM SH.2
D-426-003	230KV PCB 646888 (CO.#B19453) WIRING DIAGRAM
D-426-004	230KV PCB 646888 (CO.#B19453) BCT WIRING DIAGRAM & NAMEPLATE
D-426-005	230KV PCB 646888 (CO.#B19453) NAMEPLATE & GAS SYSTEM

P.I.#1899807

BURNS McDONNELL
4004 SUMMIT BLVD., NE, SUITE 1200
ATLANTA, GA 30319
PHONE: (770)587-4776
Burns & McDonnell Engineering Co. Inc.
GA ENGINEERING LICENSE: PEF000100
EXPIRATION DATE: 6/30/2026
THE REGISTRANT OF THE NEWLY APPLIED SEAL, DATED XX/XX/XXXX, ONLY ASSUMES RESPONSIBILITY FOR THE CHANGES AS INDICATED BY THE FOLLOWING REVISION(S): 00.

AUTOCAD ELECTRICAL
THIS DRAWING CONTAINS AUTOCAD ELECTRICAL ELEMENTS

PI:

MFG.:	SIEMENS
TYPE:	BREAKER
P.O.#:	GPC11335358
CO.#:	B19453
SER.#:	75013063-10
DWG.#:	D-72481358439-002, D-72481358439-003
DEV.#:	646888

GEORGIA POWER — A SOUTHERN COMPANY

FACILITY NAME:	MCGRAU FORD TS
TITLE:	230KV PCB 646888 (CO.#B19453) ELEMENTARY DIAGRAM SH.1
DRAWN:	EG/BMCD
CHECKED:	SW/BMCD
APPROVED:	PI#1899807
DATE:	12/17/2024
TYPE:	82
SCALE:	N.T.S.
BOM:	
FACILITY #:	01-173
NUMBER:	D- 426
SHEET:	- 001 -
REV:	-
ASC FACS:	
ALT DWG NUM:	

LEGEND	
DEVICE	DESCRIPTION
08AC	TRANSFORMER POWER DISCONNECT
08C	CLOSE POWER DISCONNECT
08H	HEATER POWER DISCONNECT
08M	MOTOR POWER DISCONNECT
08O	RECEPTACLE POWER DISCONNECT
08T1	TRIP #1 POWER DISCONNECT
08T2	TRIP #2 POWER DISCONNECT
23	CONTROL HOUSING THERMOSTAT
2505	REMOTE I/O MODULE (CUSTOMER SUPPLIED)
43	MAINTENANCE SWITCH
43TS	TRANSFER SWITCH
52	BREAKER AUXILIARY SWITCH
52C	BREAKER CLOSE COIL
52CX	AUX BREAKER CLOSING RELAY
52T1	BREAKER TRIP COIL
52T2	BREAKER TRIP COIL
52Y	BREAKER CLOSING CUTOFF RELAY (ANTI-PUMP)
62-1	TIME DELAY RELAY
63AX	INTERRUPTER SF6 LOW PRESSURE CUTOUT AUXILIARY RELAY
63BX	INTERRUPTER SF6 LOW PRESSURE CUTOUT AUXILIARY RELAY
63G	GAS PRESSURE SWITCH (SF6)
74X	SPRING DISCHARGE ALARM
88	MOTOR
H1	CABINET HEATER
H2	CABINET HEATER
LT2	GREEN INDICATOR LIGHT (REMOTE)
LT3	RED INDICATOR LIGHT (REMOTE)
LT4	RED INDICATOR LIGHT (REMOTE)
MS	SPRING CHARGE MOTOR SWITCH
PBC	PUSHBUTTON CONTROL SWITCH (CLOSE)
PBT1	PUSHBUTTON CONTROL SWITCH (TRIP)
PBT2	PUSHBUTTON CONTROL SWITCH (TRIP 2)
PR	PROTECTIVE RELAY (REMOTE)
RCP	DUPLEX RECEPTACLE (GFCI)
XFMR	TRANSFORMER

NOTES:

1. ALL EQUIPMENT SHOWN WITH: CIRCUIT BREAKER OPEN, CONTROL VOLTAGE OFF, SF6 PRESSURE LOW, SPRING DISCHARGED, TEMPERATURE LOW.
2. ALL BREAKER AUXILIARY SWITCHES SHOWN AS: (a=OPEN/BKR OPEN b=CLOSED/BKR OPEN)
3. SCHEME AS SHOWN WILL TRIP & BLOCK CLOSE ON LOW GAS PRESSURE. REMOVE JUMPER TO BLOCK TRIP & BLOCK CLOSE ON LOW GAS PRESSURE.
4. BREAKER WILL NOT LOCKOUT WITH JUMPER IN PLACE.

52 SPARE CONTACTS

43TS

CUTOUT SWITCH

DECK	3C04-3 CONTACTS	POSITION 125VDC	OFF	120VAC
1	1 — 2 / 3	X		
2	6 — 4 / 5	X		
3	7 — 8 / 9	X		
4	12 — 10 / 11	X		

X- DENOTES CONTACT IN CLOSED POSITION. SWITCH STATE = ON1

63AX

LOCKOUT RELAY (86)

DECK	7803D CONTACTS	POSITION TRIP	RESET
INTERRUPTER	8 — C		X
	F — G		X
1	11 — 13		X
	12 — 18	X	
	15 — 17		X
	16 — 14	X	
2	21 — 23		X
	22 — 28	X	
	25 — 27		X
	26 — 24	X	
3	31 — 33		X
	32 — 38	X	
	35 — 37		X
	36 — 34	X	

X- DENOTES CONTACT IN CLOSED POSITION. SWITCH STATE = RESET

63BX

LOCKOUT RELAY (86)

DECK	7803D CONTACTS	POSITION TRIP	RESET
INTERRUPTER	8 — C		X
	F — G		X
1	11 — 13		X
	12 — 18	X	
	15 — 17		X
	16 — 14	X	
2	21 — 23		X
	22 — 28	X	
	25 — 27		X
	26 — 24	X	
3	31 — 33		X
	32 — 38	X	
	35 — 37		X
	36 — 34	X	

X- DENOTES CONTACT IN CLOSED POSITION. SWITCH STATE = RESET

43

MAINTENANCE SWITCH

DECK	242108-2 (100-2W34E) CONTACTS	POS1 NORMAL	POS2 MAINTENANCE
1	12 — 11	X	
	14 — 13		X
	16 — 15	X	
	18 — 17		X
2	22 — 21	X	
	24 — 23		X
	26 — 25	X	
	28 — 27		X
3	32 — 31	X	
	34 — 33		X
	36 — 35	X	
	38 — 37		X
4	42 — 41	X	
	44 — 43		X
	46 — 45	X	
	48 — 47		X
5	52 — 51	X	
	54 — 53		X
	56 — 55	X	
	58 — 57		X
6	62 — 61	X	
	64 — 63		X
	66 — 65	X	
	68 — 67		X
7	72 — 71	X	
	74 — 73		X
	76 — 75	X	
	78 — 77		X
8	82 — 81	X	
	84 — 83		X
	86 — 85	X	
	88 — 87		X
9	92 — 91	X	
	94 — 93		X
	96 — 95	X	
	98 — 97		X
10	102 — 101	X	
	104 — 103		X
	106 — 105	X	
	108 — 107		X

X- DENOTES CONTACT IN CLOSED POSITION. SWITCH STATE = NORMAL

63G

PRESSURE SWITCH SETTINGS (SF6)

SWITCH 1 (ALARM)	75.0 PSIG	@68°F
SWITCH 2 (CUTOUT)	72.0 PSIG	@68°F
SWITCH 3 (CUTOUT)	72.0 PSIG	@68°F

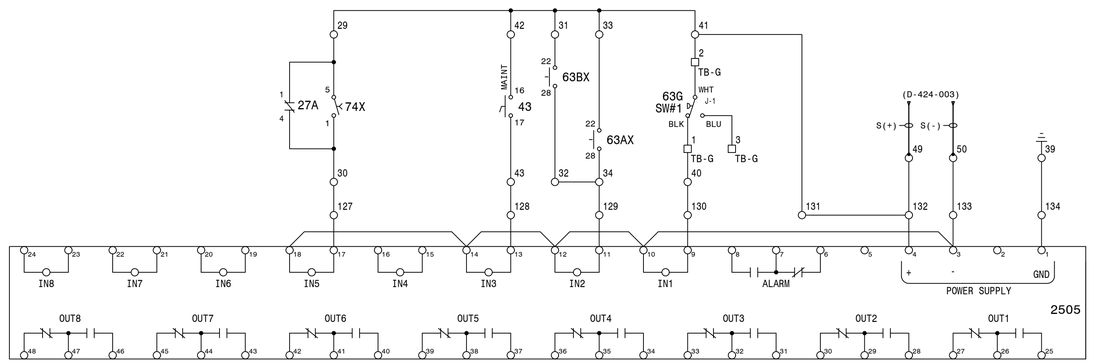

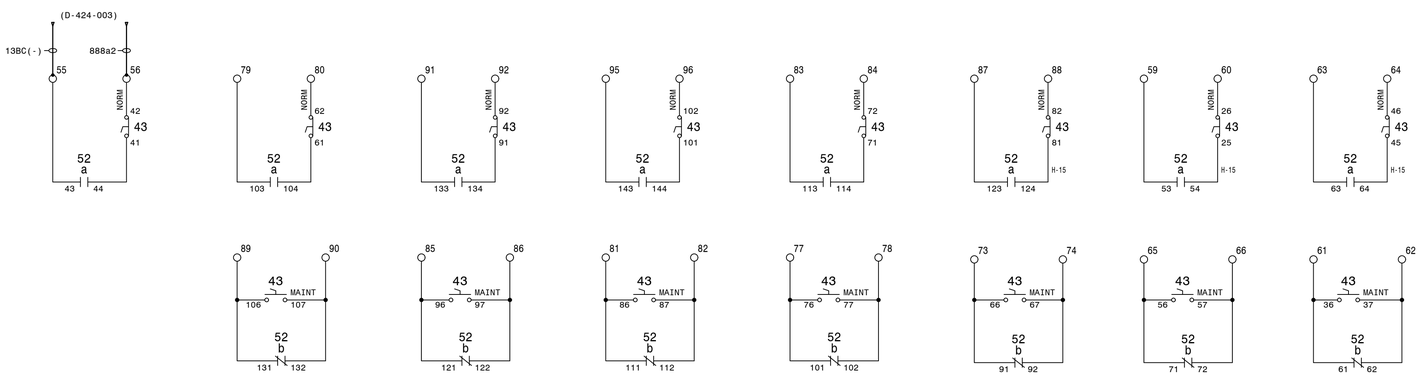

AUTOCAD ELECTRICAL

THIS DRAWING CONTAINS AUTOCAD ELECTRICAL ELEMENTS

REFERENCES

D-426-001	230KV PCB 646888 (CO.#B19453) ELEMENTARY DIAGRAM SH.1
D-426-003	230KV PCB 646888 (CO.#B19453) WIRING DIAGRAM
D-426-004	230KV PCB 646888 (CO.#B19453) BCT WIRING DIAGRAM & NAMEPLATE
D-426-005	230KV PCB 646888 (CO.#B19453) NAMEPLATE & GAS SYSTEM

P.I.#1899807

BURNS & McDONNELL
4004 SUMMIT BLVD., NE, SUITE 1200
ATLANTA, GA 30319
PHONE: (770)1687-4776
Burns & McDonnell Engineering Co. Inc.
GA ENGINEERING LICENSE: PEF002100
EXPIRATION DATE: 6/30/2026
THE REGISTRANT OF THE NEWLY APPLIED SEAL DATED 00/00/0000, ONLY ASSUMES RESPONSIBILITY FOR THE CHANGES AS INDICATED BY THE FOLLOWING REVISIONS:NO.

PI:	PI:	PI:	PI:	PI:	PI:	PI:

MFG.: SIEMENS			
TYPE: BREAKER			
P.O.#: GPC11335358	CO.#: B19453		
SER.#: 75013063-10			
DWG.#: D-72481358439-001			
DEV.#: 646888			

GEORGIA POWER — A SOUTHERN COMPANY

DRAWN: EG/BMCD			
CHECKED: SW/BMCD			
APPROVED: PI#1899807			
DATE: 12/17/2024			

FACILITY NAME: MCGRAU FORD TS

TITLE: 230KV PCB 646888 (CO.#B19453) ELEMENTARY DIAGRAM SH.2

TYPE: 82	FACILITY #: 01-173	NUMBER: D- 426	SHEET: - 002 -	REV: -
SCALE: N.T.S.				
BOM:				
ASC FACS:			ALT DWG NUM:	

NOTES:

1. ALL EQUIPMENT SHOWN WITH: CIRCUIT BREAKER OPEN, CONTROL VOLTAGE OFF, SF6 PRESSURE LOW, SPRING DISCHARGED, TEMPERATURE LOW.
2. ALL BREAKER AUXILIARY SWITCHES SHOWN AS: (a=OPEN/BKR OPEN b=CLOSED/BKR OPEN)
3. SCHEME AS SHOWN WILL TRIP & BLOCK CLOSE ON LOW GAS PRESSURE. REMOVE JUMPER TO BLOCK TRIP & BLOCK CLOSE ON LOW GAS PRESSURE.
4. BREAKER WILL NOT LOCKOUT WITH JUMPER IN PLACE.

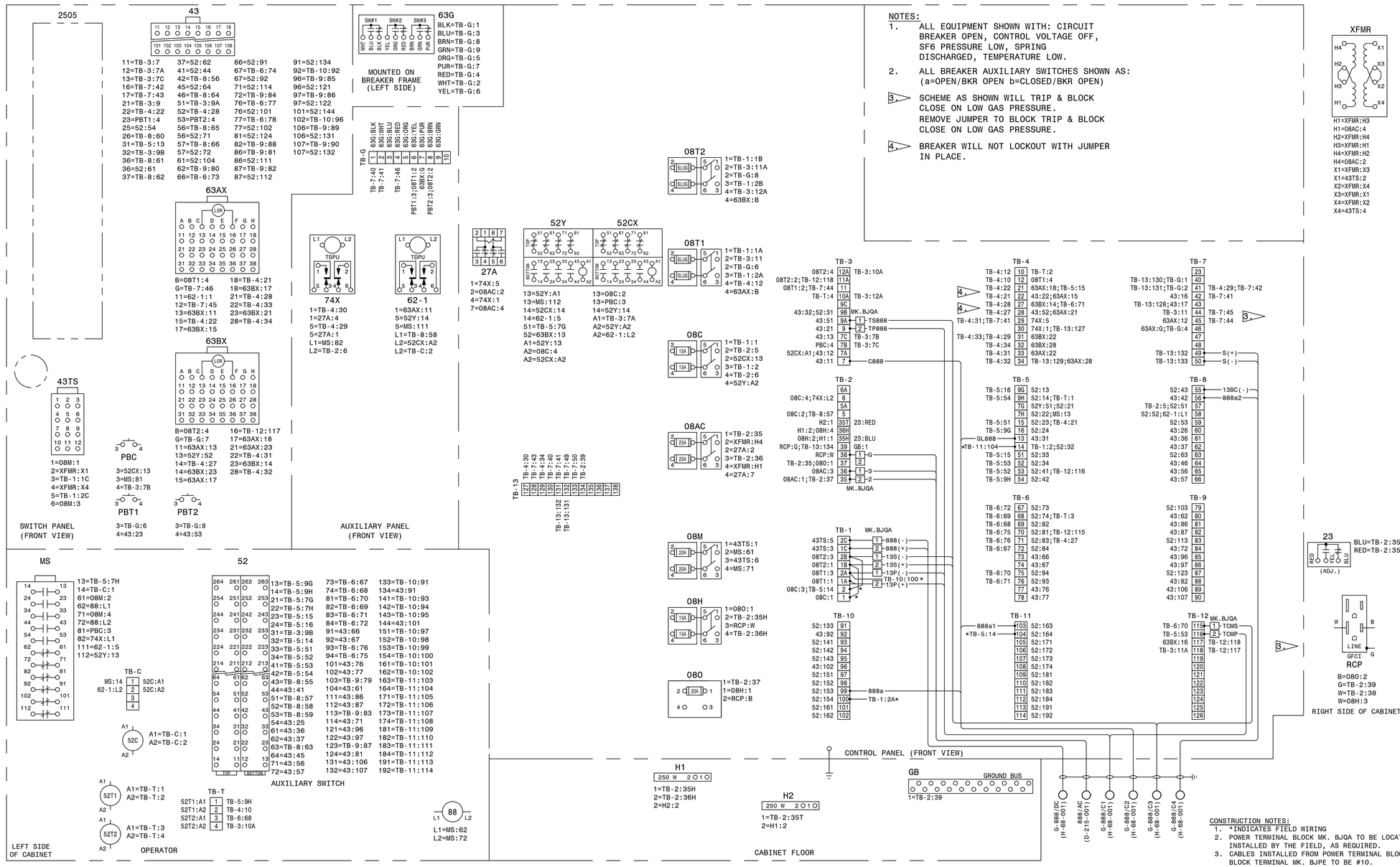

CONSTRUCTION NOTES:

1. *INDICATES FIELD WIRING
2. POWER TERMINAL BLOCK MK. BJQA TO BE LOCATED AND INSTALLED BY THE FIELD, AS REQUIRED.
3. CABLES INSTALLED FROM POWER TERMINAL BLOCK MK. BJQA TO BLOCK TERMINAL MK. BJPE TO BE #10.

REFERENCES

D-426-001	230KV PCB 646888 (CO.#B19453) ELEMENTARY DIAGRAM SH.1
D-426-002	230KV PCB 646888 (CO.#B19453) ELEMENTARY DIAGRAM SH.2
D-426-004	230KV PCB 646888 (CO.#B19453) BCT WIRING DIAGRAM & NAMEPLATE
D-426-005	230KV PCB 646888 (CO.#B19453) NAMEPLATE & GAS SYSTEM

AUTOCAD ELECTRICAL

THIS DRAWING CONTAINS AUTOCAD ELECTRICAL ELEMENTS

P.I.#1899807

BURNS McDONNELL
4004 SUMMIT BLVD., NE, SUITE 1200
ATLANTA, GA 30319
PHONE: (770)587-4776

Burns & McDonnell Engineering Co. Inc.
GA ENGINEERING LICENSE: PEF000100
EXPIRATION DATE: 6/30/2026

THE REGISTRANT OF THE NEWLY APPLIED SEAL DATED XX/XX/2024, ONLY ASSUMES RESPONSIBILITY FOR THE CHANGES AS INDICATED BY THE FOLLOWING REVISION(S):No.

MFG.: SIEMENS			
TYPE: BREAKER			
P.O.#: GPC11335358	CO.#: B19453		
SER.#: 75013063-10			
DWG.#: D-72481358439-004			
DEV.#: 646888			

GEORGIA POWER — A SOUTHERN COMPANY

FACILITY NAME: MCGRAU FORD TS

TITLE: 230KV PCB 646888 (CO.#B19453) WIRING DIAGRAM

DRAWN: EG/BMCD			
CHECKED: SW/BMCD	TYPE: 82	FACILITY #: 01-173	NUMBER: D- 426
APPROVED: PI#1899807	SCALE: N.T.S.		SHEET: - 003 -
DATE: 12/17/2024	BOM:		REV: -

ASC FACS: ALT DWG NUM:

PI: PI: PI: PI: PI: PI: PI:

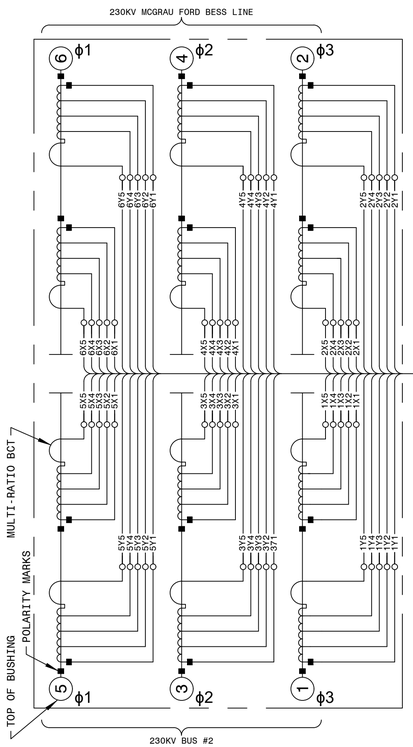

3000/5 - SPECIAL			
TAPS	TURNS	RATIO	
X2-X3	80	400/5	
X1-X2	120	600/5	
X4-X5	160	800/5	
X1-X3	200	1000/5	
X3-X4	240	1200/5	
X2-X4	320	1600/5	
X3-X5	400	2000/5	← 1-3-5
X1-X4	440	2200/5	
X2-X5	480	2400/5	
X1-X5	600	3000/5	← 2-4-6

TAPS		600/5		1200/5		2000/5		3000/5		4000/5	
		TURNS	RATIO	TURNS	RATIO	TURNS	RATIO	TURNS	RATIO	TURNS	RATIO
X2-X3	Y2-Y3	10	50/5	20	100/5	160	800/5	240	1200/5	300	1500/5
X1-X2	Y1-Y2	20	100/5	40	200/5	80	400/5	200	1000/5	100	500/5
X1-X3	Y1-Y3	30	150/5	60	300/5	240	1200/5	440	2200/5	400	2000/5
X4-X5	Y4-Y5	40	200/5	80	400/5	100	500/5	100	500/5		
X3-X4	Y3-Y4	50	250/5	100	500/5	60	300/5	60	300/5	200	1000/5
X2-X4	Y2-Y4	60	300/5	120	600/5	220	1100/5	300	1500/5	500	2500/5
X1-X4	Y1-Y4	80	400/5	160	800/5	300	1500/5	500	2500/5	600	3000/5
X3-X5	Y3-Y5	90	450/5	180	900/5			160	800/5		
X2-X5	Y2-Y5	100	500/5	200	1000/5	320	1600/5	400	2000/5	700	3500/5
X1-X5	Y1-Y5	120	600/5	240	1200/5	400	2000/5	600	3000/5	800	4000/5

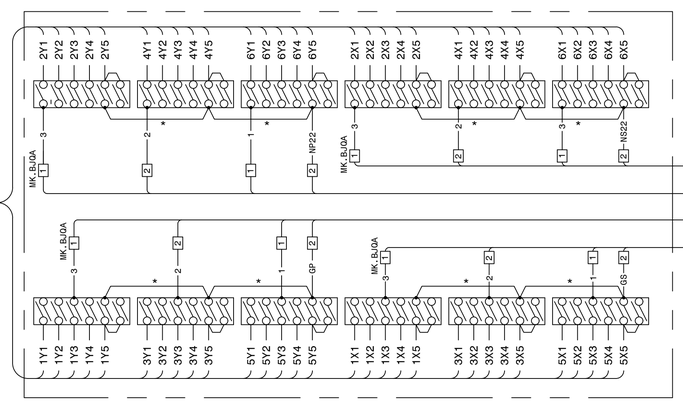

RIGHT SIDE OF MECH HSG.
VIEW A-A

COLOR OF LEADS:

X1 & Y1	BLACK
X2 & Y2	RED
X3 & Y3	ORANGE
X4 & Y4	YELLOW
X5 & Y5	GREEN

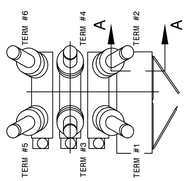

NOTES:

1. (12) 6 POINT- STATES SLIDING LINK TERMINAL BLOCKS.
2. CT LEADS ARE #10 AWG.

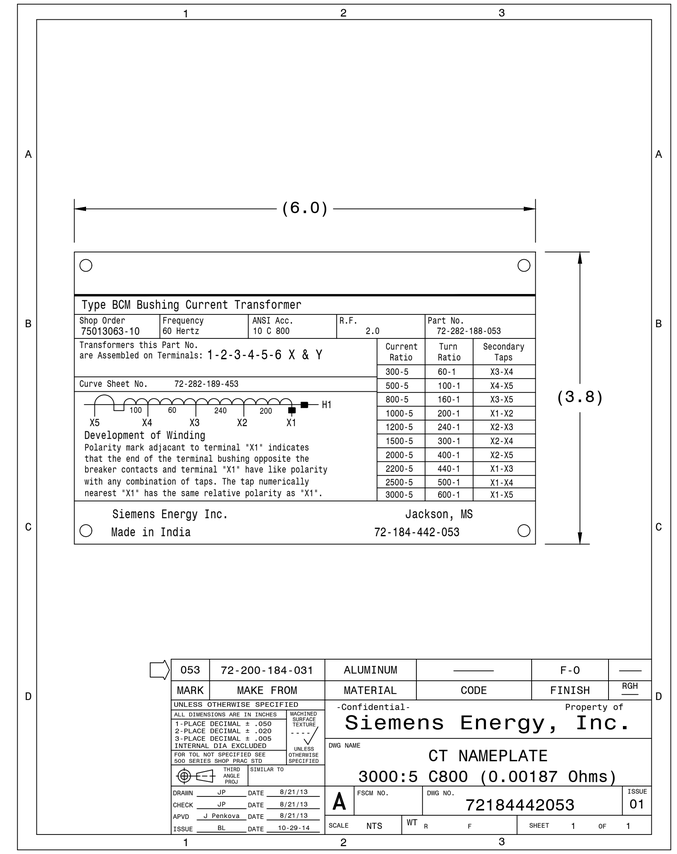

AUTOCAD ELECTRICAL

THIS DRAWING CONTAINS AUTOCAD ELECTRICAL ELEMENTS

CONSTRUCTION NOTES:

1. *INDICATES FIELD WIRING
2. POWER TERMINAL BLOCK MK. BJQA TO BE LOCATED AND INSTALLED BY THE FIELD, AS REQUIRED.
3. CABLES INSTALLED FROM POWER TERMINAL BLOCK MK. BJQA TO BLOCK TERMINAL MK. BJPE TO BE #10.

REFERENCES

D-426-001	230KV PCB 646888 (CO.#B19453) ELEMENTARY DIAGRAM SH.1
D-426-002	230KV PCB 646888 (CO.#B19453) ELEMENTARY DIAGRAM SH.2
D-426-003	230KV PCB 646888 (CO.#B19453) WIRING DIAGRAM
D-426-005	230KV PCB 646888 (CO.#B19453) NAMEPLATE & GAS SYSTEM

P.I.#1899807

BURNS McDONNELL
4004 SUMMIT BLVD. NE, SUITE 1200
ATLANTA, GA 30319
PHONE: (770)587-4776
Burns & McDonnell Engineering Co. Inc.
GA ENGINEERING LICENSE: PEF000100
EXPIRATION DATE: 6/30/2026
THE REGISTRANT OF THE NEWLY APPLIED SEAL DATED XX/XX/XXXX, ONLY ASSUMES RESPONSIBILITY FOR THE CHANGES AS INDICATED BY THE FOLLOWING REVISIONS:None.

PI: PI: PI: PI: PI: PI: PI:

MFG.:	SIEMENS
TYPE:	BREAKER
P.O.#:	GPC11335358
CO.#:	B19453
SER.#:	75013063-10
DWG.#:	A-72-281-750-454, A-72184442053
DEV.#:	646888

GEORGIA POWER
A SOUTHERN COMPANY

DRAWN:	EG/BMCD
CHECKED:	SW/BMCD
APPROVED:	PI#1899807
DATE:	12/17/2024

FACILITY NAME: MCGRAU FORD TS

TITLE: 230KV PCB 646888 (CO.#B19453) BCT WIRING DIAGRAM & NAMEPLATE

TYPE: 82	FACILITY #: 01-173	NUMBER: D- 426	SHEET: - 004 -	REV: -
SCALE: N.T.S.				
BOM:				
ASC FACS:		ALT DWG NUM:		

Sulfur Hexafluoride Circuit Breaker
Type SPS2S-245-63 -1

SIEMENS energy

Rated Max. Volts 245 kV	Rated Voltage Range Factor 1.0 (K)	Rated Interrupting Time 2.0 Cycles
Rated Continuous Current 3000 A	Rated Short Circuit Current 63000 A	Rated Capacitance Current Switching
Frequency 60 Hz	Rated Out of Phase Current 15800 A	Line Charging 200 A Isolated Bank Sw. 1200 A Back -to- Back Sw. 700 A Inrush Peak 20000 A Inrush Freq. 4250 Hz
Wt. of Breaker With Gas 11200 Lbs	Full Wave Impulse Withstand 900 kV	
Weight of SF6 Gas 116 Lbs	PO# GPC11335358 ITEM# 1876166	
Rated Operating Pressure at 68°F/20°C 87 psig		Rated Operating Duty Cycle OCO-15SEC-CO
Minimum Operating Pressure at 68 F/20°C 72 psig	Short Time Current Duration 3 SEC	Serial - S.O. 75013063-1 THRU 15
SF6 Alarm Pressure at 68°F/20°C 75 psig	Close and Latch 170 kA	Parts List No.
SF6 Cutout Pressure at 68°F/20°C 72 psig	Rated Chopped Wave @ 2 microS 1160 kV	Instruction Book PB- 3538-01
% of DC Component 57 %		Date of Mfr. MONTH/YEAR

Siemens Energy, Inc.
Manufactured or Assembled of U.S.
and Foreign Components

Jackson, MS

72184717001

MARK	MAKE FROM	MATERIAL	CODE	FINISH	RGH
001	72200184027	ALUMINUM	---	F-0	---

UNLESS OTHERWISE SPECIFIED
ALL DIMENSIONS ARE IN INCHES
1-PLACE DECIMAL ± .050
2-PLACE DECIMAL ± .020
3-PLACE DECIMAL ± .005
INTERNAL DIA EXCLUDED
FOR TOL NOT SPECIFIED SEE 500 SERIES SHOP PRAC STD
MACHINED SURFACE TEXTURE ~~~ UNLESS OTHERWISE SPECIFIED
THIRD ANGLE PROJ
SIMILAR TO 72184715001

-Confidential- Property of
Siemens Energy, Inc.

DWG NAME
NAMEPLATE
BREAKER, 245kV

DRAWN MD	DATE 6/3/19	A	FSCM NO.
CHECK MD	DATE 6/3/19		DWG NO. 72184717001
APVD BL	DATE 2/5/20		ISSUE 01
ISSUE TH	DATE 2/7/20	SCALE 1=1	WT R F SHEET 1 OF 1

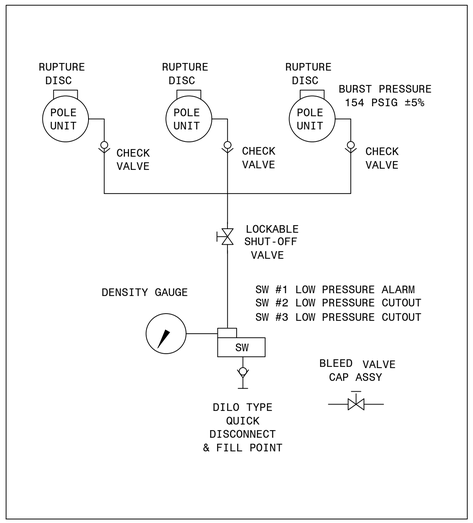

GAS SYSTEM

UNLESS OTHERWISE SPECIFIED
ALL DIMENSIONS ARE IN INCHES
1-PLACE DECIMAL ± .050
2-PLACE DECIMAL ± .020
3-PLACE DECIMAL ± .005
INTERNAL DIA EXCLUDED
FOR TOL NOT SPECIFIED SEE 500 SERIES SHOP PRAC STD
MACHINED SURFACE TEXTURE ~~~ UNLESS OTHERWISE SPECIFIED
THIRD ANGLE PROJ
SIMILAR TO 72-181-177-442

-Confidential- Property of
Siemens Energy, Inc.

DWG NAME
GAS SYSTEM SCHEMATIC
OSDS w/SHUT-OFF

DRAWN TH	DATE 2-16-05	A	FSCM NO.
CHECK TH	DATE 2-16-05		DWG NO. 72-181-177-450
APVD JP	DATE 2-17-05		ISSUE 01
ISSUE W BOYD	DATE 10/07/08	SCALE NTS	WT R F SHEET 1 OF 1

AUTOCAD ELECTRICAL
THIS DRAWING CONTAINS AUTOCAD ELECTRICAL ELEMENTS

REFERENCES

D-426-001	230KV PCB 646888 (CO.#B19453) ELEMENTARY DIAGRAM SH.1
D-426-002	230KV PCB 646888 (CO.#B19453) ELEMENTARY DIAGRAM SH.2
D-426-003	230KV PCB 646888 (CO.#B19453) WIRING DIAGRAM
D-426-004	230KV PCB 646888 (CO.#B19453) BCT WIRING DIAGRAM & NAMEPLATE

P.I.#1899807

BURNS McDONNELL
4004 SUMMIT BLVD., NE, SUITE 1200
ATLANTA, GA 30319
PHONE: (770)587-4776

Burns & McDonnell Engineering Co. Inc.
GA ENGINEERING LICENSE: PEF000100
EXPIRATION DATE: 6/30/2026

THE REGISTRANT OF THE NEWLY APPLIED SEAL DATED 6/30/2026 ONLY ASSUMES RESPONSIBILITY FOR THE CHANGES AS INDICATED BY THE FOLLOWING REVISIONS:NO.

PI: | PI: | PI: | PI: | PI: | PI: | PI:

MFG.: SIEMENS	
TYPE: BREAKER	
P.O.#: GPC11335358	CO.#: B19453
SER.#: 75013063-10	
DWG.#: A-72184717001, A-72-181-177-450	
DEV.#: 646888	

GEORGIA POWER
A SOUTHERN COMPANY

DRAWN:	EG/BMCD
CHECKED:	SW/BMCD
APPROVED:	PI#1899807
DATE:	12/17/2024

FACILITY NAME: MCGRAU FORD TS
TITLE: 230KV PCB 646888 (CO.#B19453) NAMEPLATE & GAS SYSTEM

TYPE:	82	FACILITY #:	NUMBER:	SHEET:	REV:
SCALE:	N.T.S.	01-173	D- 426	- 005 -	-
BOM:					
ASC FACS:			ALT DWG NUM:		

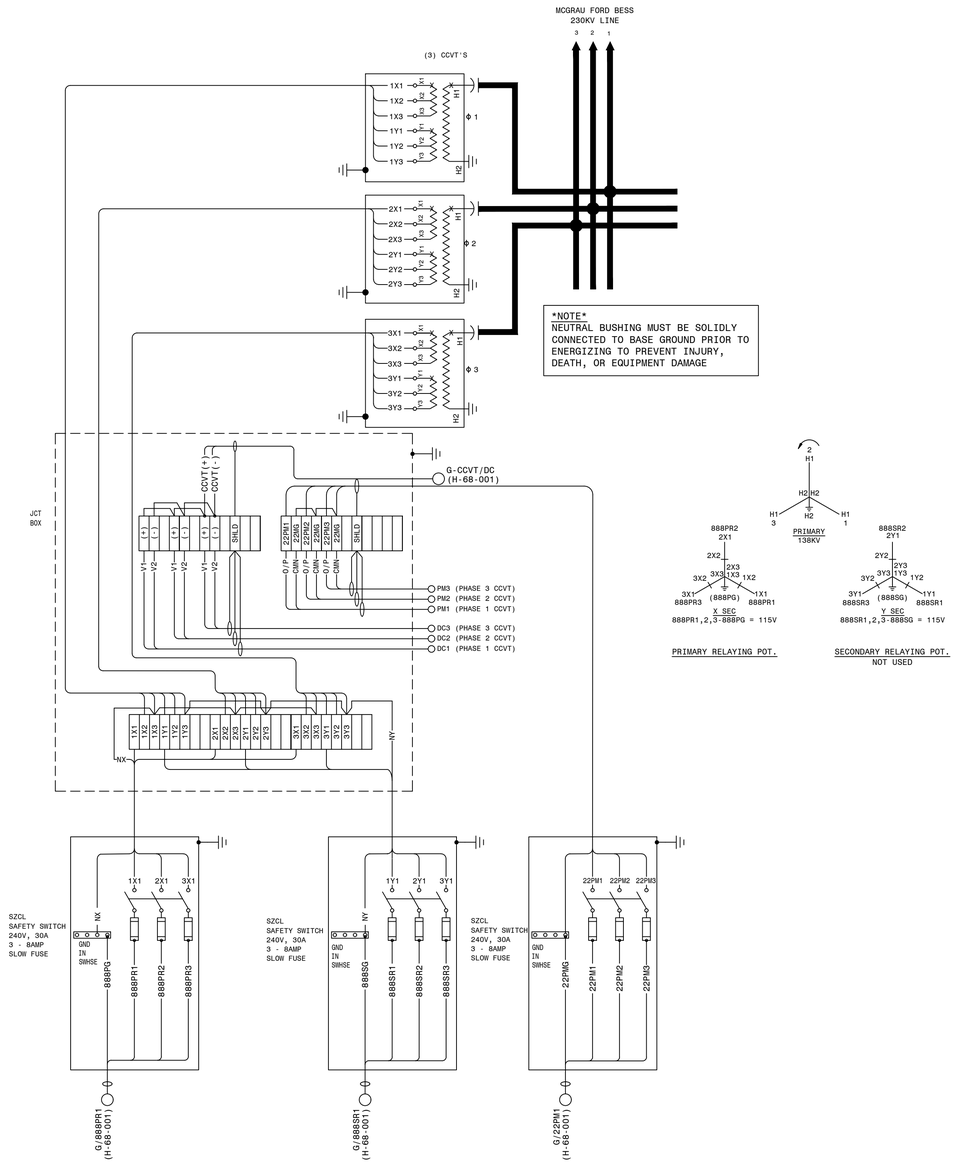

PRIMARY RELAYING POT.

SECONDARY RELAYING POT.
NOT USED

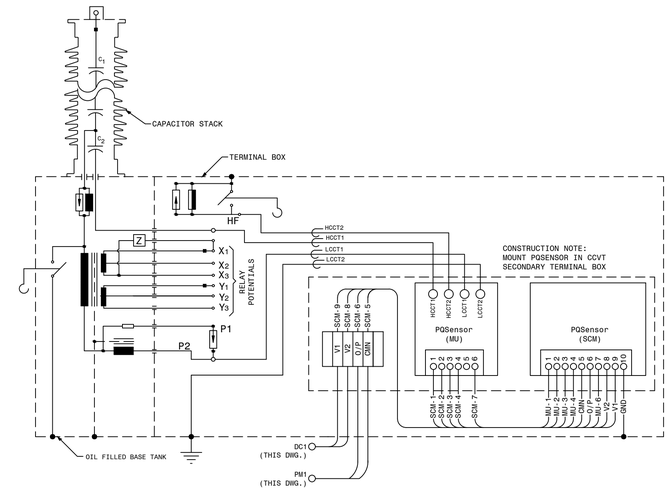

PHASE 1 CCVT/PQ SENSOR WIRING DETAIL (TYPICAL FOR PHASE 2 & 3)

REFERENCE:
H-24-001 SINGLE LINE DIAGRAM SH.1

P.I.#1899807

BURNS McDONNELL
4004 SUMMIT BLVD., NE, SUITE 1200
ATLANTA, GA 30319
PHONE: (770)587-4776

Burns & McDonnell Engineering Co. Inc.
GA ENGINEERING LICENSE: PEF000100
EXPIRATION DATE: 6/30/2026

THE REGISTRANT OF THE NEWLY APPLIED SEAL DATED 3/22/2024 ONLY ASSUMES RESPONSIBILITY FOR THE CHANGES AS INDICATED BY THE FOLLOWING REVISIONS:

AUTOCAD ELECTRICAL
THIS DRAWING CONTAINS AUTOCAD ELECTRICAL ELEMENTS

PI:	PI:	PI:	PI:	PI:	PI:	PI:	PI:

GEORGIA POWER
A SOUTHERN COMPANY

FACILITY NAME: MCGRAU FORD TS

TITLE: 230KV MCGRAU FORD BESS CCVT POTENTIAL CONNECTION DIAGRAM

DRAWN: EG/BMCD					
CHECKED: SW/BMCD	TYPE: PT	FACILITY #:	NUMBER:	SHEET:	REV:
APPROVED: PI#1899807	SCALE: N.T.S.	01-173	D- 427	- 001	- 00
DATE: 12/19/2024	BOM:				
	ASC FACS:		ALT DWG NUM:		

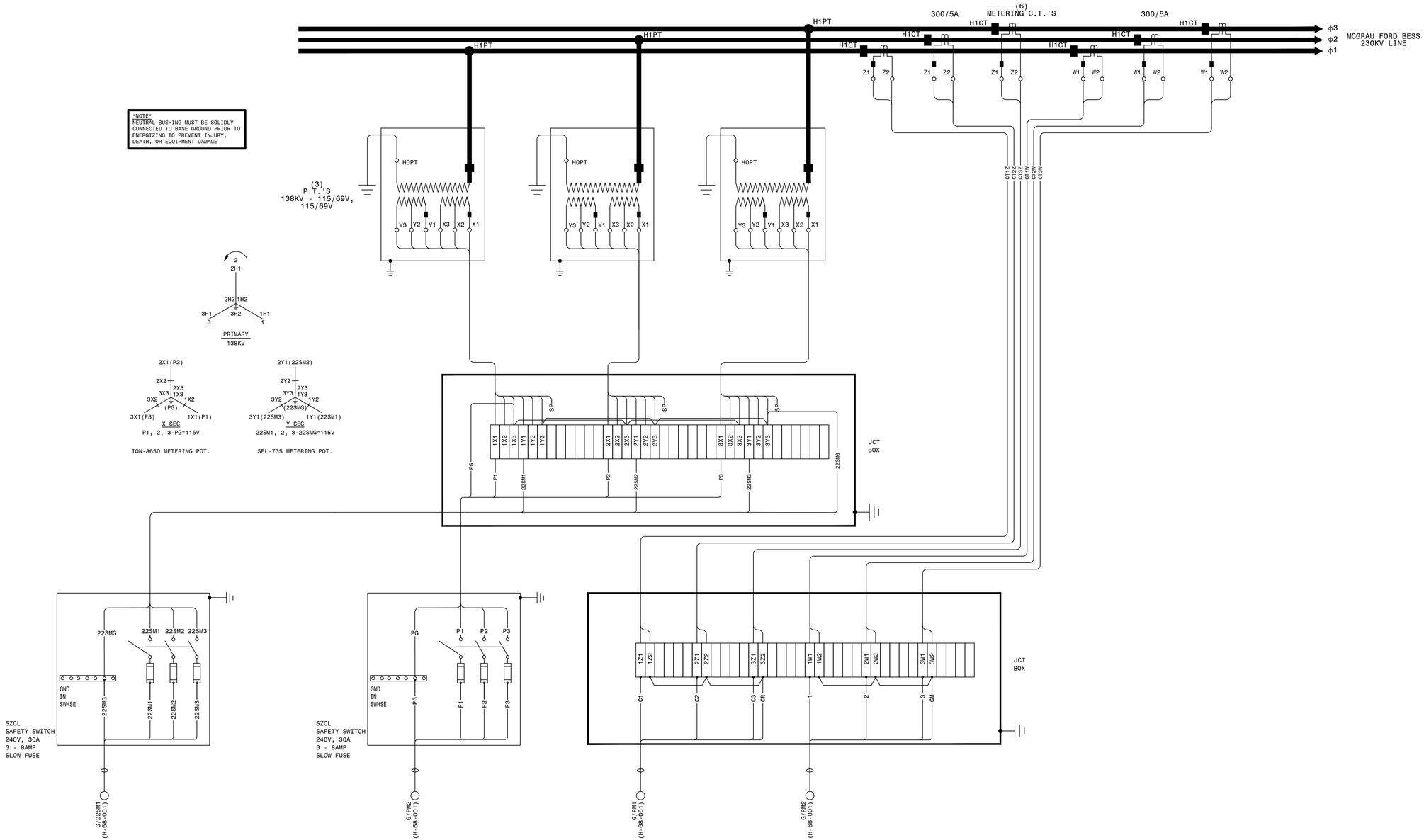

REFERENCE:
H-24-001 SINGLE LINE DIAGRAM SH.1

AUTOCAD ELECTRICAL
THIS DRAWING CONTAINS AUTOCAD ELECTRICAL ELEMENTS

P.I.#1899807

BURNS McDONNELL
4004 SUMMIT BLVD. NE, SUITE 1200
ATLANTA, GA 30319
PHONE: (770)587-4776

Burns & McDonnell Engineering Co. Inc.
GA ENGINEERING LICENSE: PEF000100
EXPIRATION DATE: 6/30/2026

THE REGISTRANT OF THE NEWLY APPLIED SEAL DATED XX/XX/XXXX ONLY ASSUMES RESPONSIBILITY FOR THE CHANGES AS INDICATED BY THE FOLLOWING REVISIONS:XX-

PI:	PI:	PI:	PI:	PI:	PI:	PI:	PI:

GEORGIA POWER
A SOUTHERN COMPANY

FACILITY NAME: MCGRAU FORD TS					
TITLE: MCGRAU FORD BESS LINE INTERCHANGE REVENUE METERING CT AND PT WIRING DIAGRAM					
DRAWN: EG/BMCD					
CHECKED: SW/BMCD	TYPE: WD	FACILITY #: 01-173	NUMBER: D- 428	SHEET: - 001	REV: - 00
APPROVED: PI#1899807	SCALE: N.T.S				
DATE: 12/19/2024	BOM:				
	ASC FACS:				ALT DWG NUM:

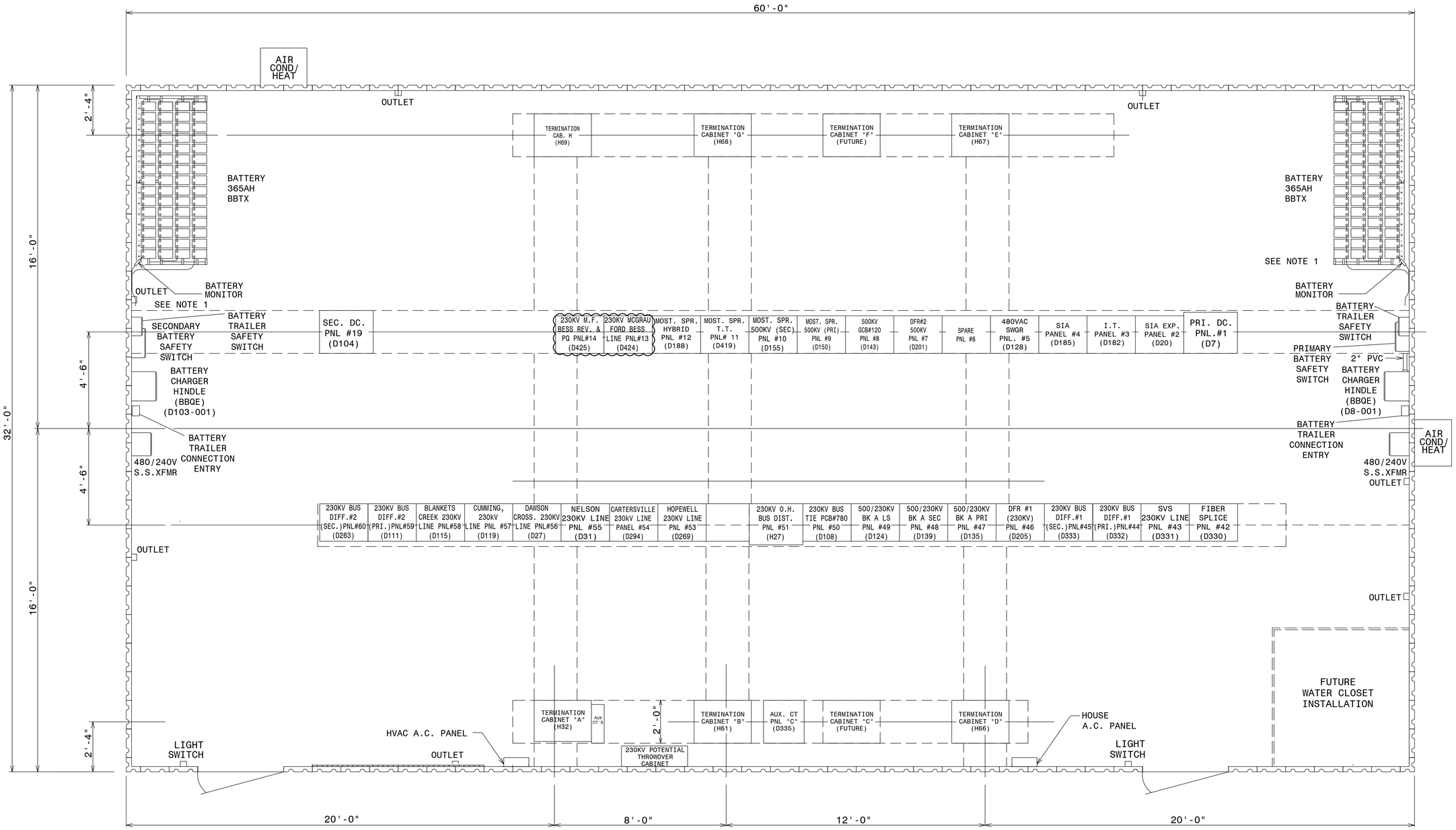

LIGHT PLAN

NOTES

1. FIELD TO LOCATE NEW BATTERY EQUIPMENT.

REFERENCES

01-173-H-24-001	SINGLE LINE DIAGRAM - SH. 1
01-173-H-63-001	SINGLE LINE DIAGRAM - SH. 2
01-173-D-334-001	SINGLE LINE DIAGRAM - SH. 3

P.I.#1899807

BURNS McDONNELL
9400 BARKLEY BLVD., NE, SUITE 1000
ATLANTA, GA 30319
PHONE: (770)587-4776
Burns & McDonnell Engineering Co. Inc.
GA ENGINEERING LICENSE: PEF000100
EXPIRATION DATE: 6/30/2025
THE REGISTRANT OF THE NEWLY APPLIED SEAL ON THIS DRAWING ONLY ASSUMES RESPONSIBILITY FOR THE CHANGES AS INDICATED BY THE FOLLOWING REVISIONS(s):

PI:	02 KM AJW 10/12/2005 PI:	03 CP TEB 2/20/2012 PI: 1402601	04 JOR GAS 4/24/2013 PI: FC5	05 BAK TM 11/7/2013 PI: 1500701	06 JCM JCM 2/5/2021 PI: 1855101	07 BPE BPE BPE 05/31/2023 PI: 1930501	08 BPE BPE BPE 10/12/2023 PI: 1930501	09 RJH RCL USPP 4/1/2024 PI: 2014906	10 EG SW AA 8/20/2024 PI: 1899807
	CARTERSVILLE PANEL NOT RELOCATED CUMMING 230KV LINE INSTALLED IN POSITION #57.	ADD SWBD. PNL. #60, PNL. #59 NOW 230KV PRI. DIFF. #2.	ADDED BUS PT THROWOVER CABINET, FOR RECORD ONLY.	REPLACE PANEL #53 DUE TO RELAY UPGRADE.	REPLACE CARTERSVILLE 230KV LINE PANEL #54. UPDATE PANEL #2, #3, & #4 NAMES, FOR RECORD ONLY.	UPDATE HOUSE LAYOUT FOR NEW 230KV BUS 1 DIFF. PANELS, NEW 230KV SVS LINE PANELS & 230KV NELSON LINE PANEL. UPDATE PRI. & SEC. BATTERY SYSTEMS TO 365AH & 50A CHARGER SETS & LATEST SCS STANDARD DESIGN.	UPDATE LAYOUT TO SHOW 480/240 DRY TYPE TRANSFORMERS SUPPLYING BATTERY CHARGERS ON FLOOR PLAN AS SHOWN.	UPDATED REFERENCE FOR REPLACEMENT OF PANEL 11.	INSTALL PANELS 13 AND 14.

GEORGIA POWER
A SOUTHERN COMPANY

DRAWN:	SOM	FACILITY NAME:	MCGRAU FORD TS		
CHECKED:	JWH	TITLE:	SWITCHBOARD PANEL LAYOUT		
APPROVED:	SPC	TYPE: 61	FACILITY #: 01-173	H-	NUMBER: 17 / SHEET: - 001 / REV: - 09
DATE:	7/14/2000	SCALE: 3/8"=1'-0"			
		BOM:			
		ASC FACS:		ALT DWG NUM:	

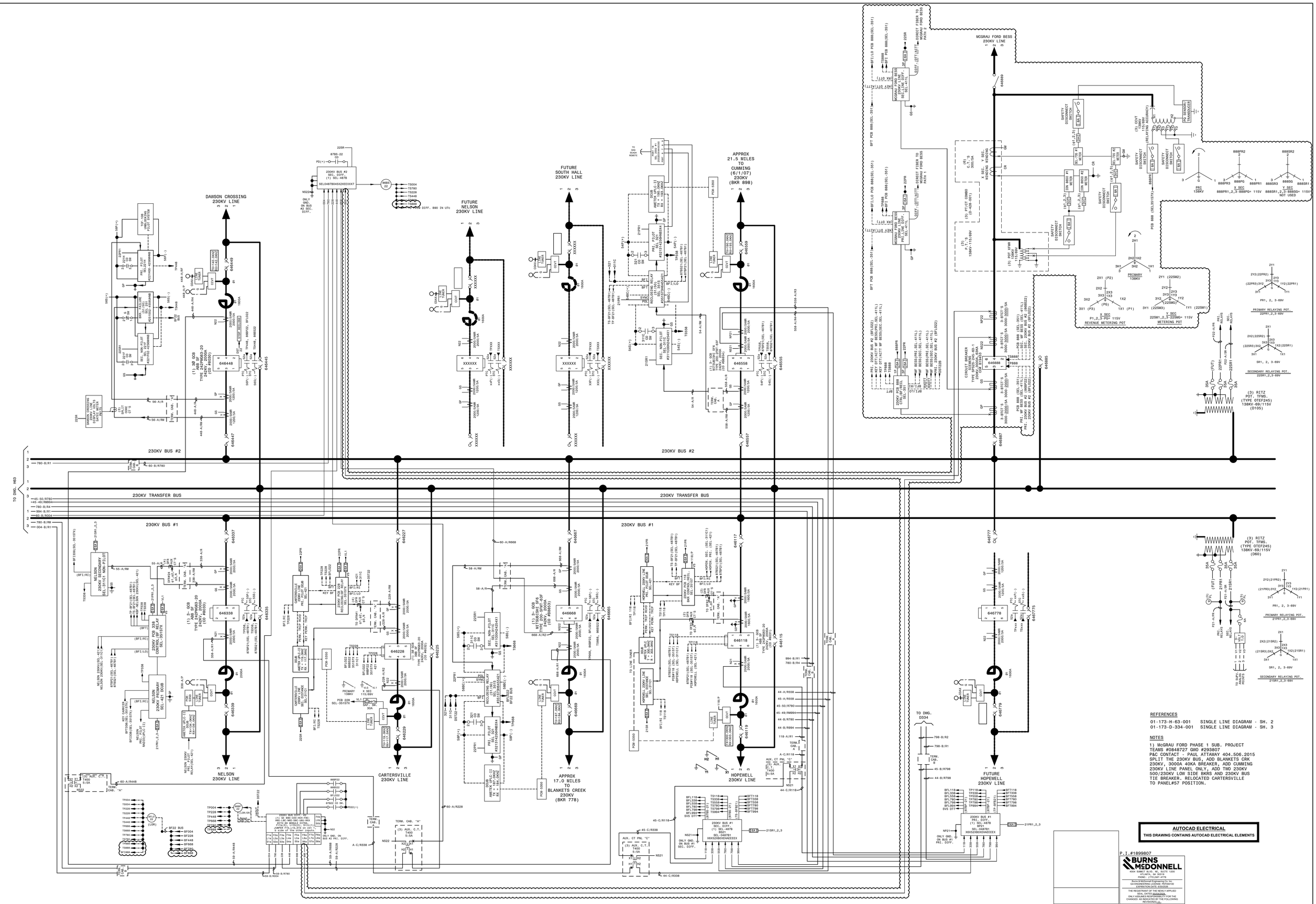

REFERENCES

01-173-H-63-001 SINGLE LINE DIAGRAM - SH. 2
01-173-D-334-001 SINGLE LINE DIAGRAM - SH. 3

NOTES

1) McGRAU FORD PHASE 1 SUB. PROJECT
TEAMS #0848727 GWO #293807
P&C CONTACT - PAUL ATTAWAY 404.506.2015
SPLIT THE 230KV BUS, ADD BLANKETS CRK
230KV, 3000A 40KA BREAKER, ADD CUMMING
230KV LINE PANEL ONLY, ADD TWO 230KV
500/230KV LOW SIDE BKRS AND 230KV BUS
TIE BREAKER. RELOCATED CARTERSVILLE
TO PANEL#57 POSITION.

02	CP	TEB	2/16/2012	PI: 1402601	03	JOR	GAS	4/25/2013	PI: FC5	04	TM	TM	11/7/2013	PI: 1500701	05	CSM	DML	3/19/2015	PI: 1451605	06	CSM	DML	4/22/2015	PI: 1451605
ADD AUX. C.T.s IN TERM. CAB. A ON CKTS. 228-A/R2 & 448-A/R4. SHOW TERM. "A" IN (4) PLACES FOR RECORD. ADD SEL-487B RELAY FOR 230KV BUS #2 SEC. DIFF. RENAME CKTS. 59-BR/004 & 59-BR/780 AS 59-B/R004 & 59-B/R780.					REMOVED DUPLICATE TRIP CONTACT, FOR RECORD ONLY.					UPGRADE RELAYING FOR PCB 118 DUE TO PANEL #53 REPLACEMENT.					REMOVE COMMUNICATION LINES FROM STATION SINGLE LINE DIAGRAM.					INSTALL SATEC PM175 METERS ON CARTERSVILLE, DAWSON CROSSING, AND NELSON 230KV LINES AS SHOWN. REMOVE SEL-DTA CONNECTIONS FROM SINGLE LINE DIAGRAM.				

07	JCM	JCM	2/5/2021	PI: 1855101	08	BPE	BPE	BPE	05/31/2023	PI: 1930501	09	BPE	BPE	BPE	08/01/2023	PI: 1930501	10	RJH	KDB	USPP	4/1/2024	PI: 2014906	11	EG	SW	AA	7/29/2024	PI: 1899807
UPGRADE CARTERSVILLE 230KV LINE RELAYING. CHANGE CT RATIO FOR LINE RELAYS TO 2000/5, & ADD LINE CCVT SAFETY SWITCH. REMOVE BF TRIPPING OF 86B522, FOR RECORD ONLY.					UPDATE NELSON LINE RELAYING AS SHOWN. REPLACE BUS 1 DIFF. RELAYING WITH PRIMARY & SECONDARY BUS DIFF. RELAYING. REMOVE BUS 1 DST SCHEME. PROVIDE AUX CTS FOR SECONDARY BUS DIFF. CONNECTION FOR NELSON & HOPEWELL 230KV LINES. UPDATE CUMMING LINE INFORMATION, SHOWN FOR RECORD ONLY.					UPDATE NELSON LINE TRAP TUNER AND CCVT AS SHOWN FOR NEW INSTALLS. UPDATE PRI. AND SEC. 230KV BUS 1 DIFF RELAY OUTPUTS AS SHOWN.					REPLACED RFL-9780 WITH AMETEK UPLC-II ON BLANKETS CREEK AND CUMMING 230KV LINES.					INSTALL 230KV LINE BREAKER AND LINE DISCONNECT SWITCH FOR MCGRAU FORD BESS LINE. REPURPOSE FUTURE CUMMING 230KV LINE AND ASSOCIATED BREAKER AND SWITCH NUMBERS.				

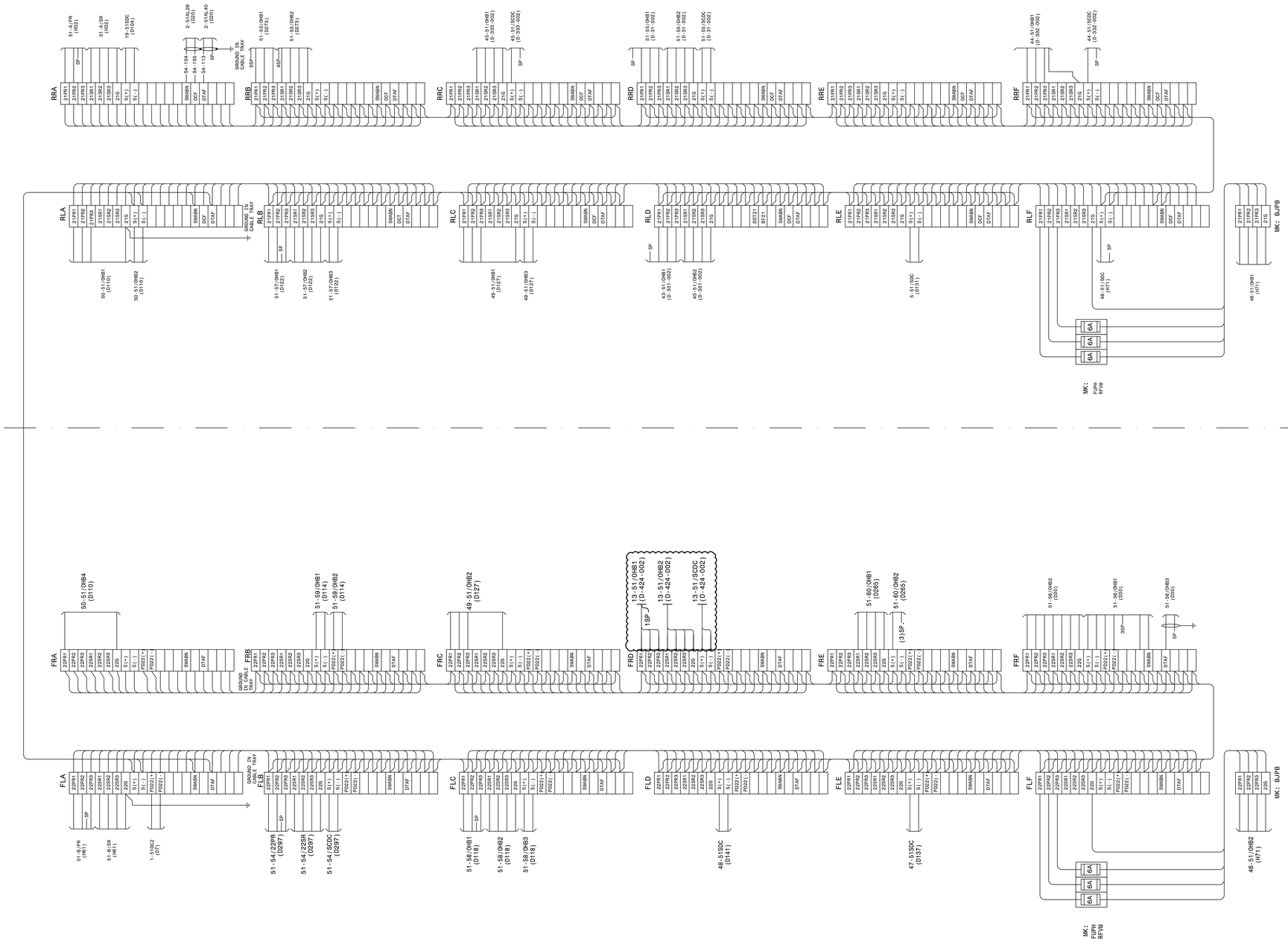

AUTOCAD ELECTRICAL

THIS DRAWING CONTAINS AUTOCAD ELECTRICAL ELEMENTS

P.I.#1899807

BURNS McDONNELL
9400 Ward Parkway, KC, MO 64114 USA
ATLANTA, GA 30319
PHONE: (770)587-4776

Burns & McDonnell Engineering Co. Inc.
GA ENGINEERING LICENSE: PEF000100
EXPIRATION DATE: 6/30/2025

THE REGISTRANT OF THE NEWLY APPLIED SEAL IS THE ENGINEER ONLY ASSUMES RESPONSIBILITY FOR THE CHANGES AS INDICATED BY THE FOLLOWING REVISIONS(:)

REFERENCES:

01-173-D84 SWBD. PANEL #51 DETAILS-
O.H. BUS DIST. PANEL

PI:	03 PWJ AJW 9/6/2007 PI: 0848727	04 CP TEB 9/6/2007 PI: 1402601	05 BAK TM 11/11/2013 PI: 1500701	06 BAS JIH USPP 3/27/2020 PI: 1616363	07 JCM JCM 2/5/2021 PI: 1855101	08 BPE BPE BPE 05/31/2023 PI: 1930501	09 BPE BPE BPE 10/12/2023 PI: 1930501	10 BPE BPE BPE 02/28/2024 PI: 1943901	11 EG DN AA 8/20/2024 PI: 1899807
	(JJH 04-18-07) REVISED POTENTIAL GROUND.	ADDE CKTS. 51-60/OHB1 & 51-60/OHB2.	REMOVE OLD CABLES 51-53/OHB1, 51-53/OHB2, 51-53/OHB3. ADD NEW CABLES 51-53/OHB1, 51-53/OHB2, 51-53/OHB3.	FC#10 (CC): UPDATED STATUS POINT NAMES.	REMOVE CABLES 51-54/OHB1, 51-54/OHB2, 51-54/OHB3. ADD CABLES 51-54/22PR, 51-54/22SR, 51-54/SCDC.	ADD CIRCUITS FOR NEW PANELS AS SHOWN.	UPDATE RRC STATES BLOCK CABLE TO CONNECT TO 21SR CIRCUIT AS SHOWN.	UPDATE DRAWING PER FIELD CHANGES AS SHOWN.	INSTALL CABLE 13-51/OHB1, 13-51/OHB2, AND 13-51/SCDC.

GEORGIA POWER
A SOUTHERN COMPANY

DRAWN:			
CHECKED: JJH	TYPE: WD	FACILITY #: 01-173	NUMBER: 27
APPROVED:	SCALE: N.T.S.		SHEET: - 001 -
DATE: 5/14/2008	BOM:		REV: 10
	ASC FACS:		ALT DWG NUM:

FACILITY NAME: MCGRAU FORD TS

TITLE: SWITCHBOARD PANEL #51 WIRING DIAGRAM OVERHEAD BUS DISTRIBUTION PANEL

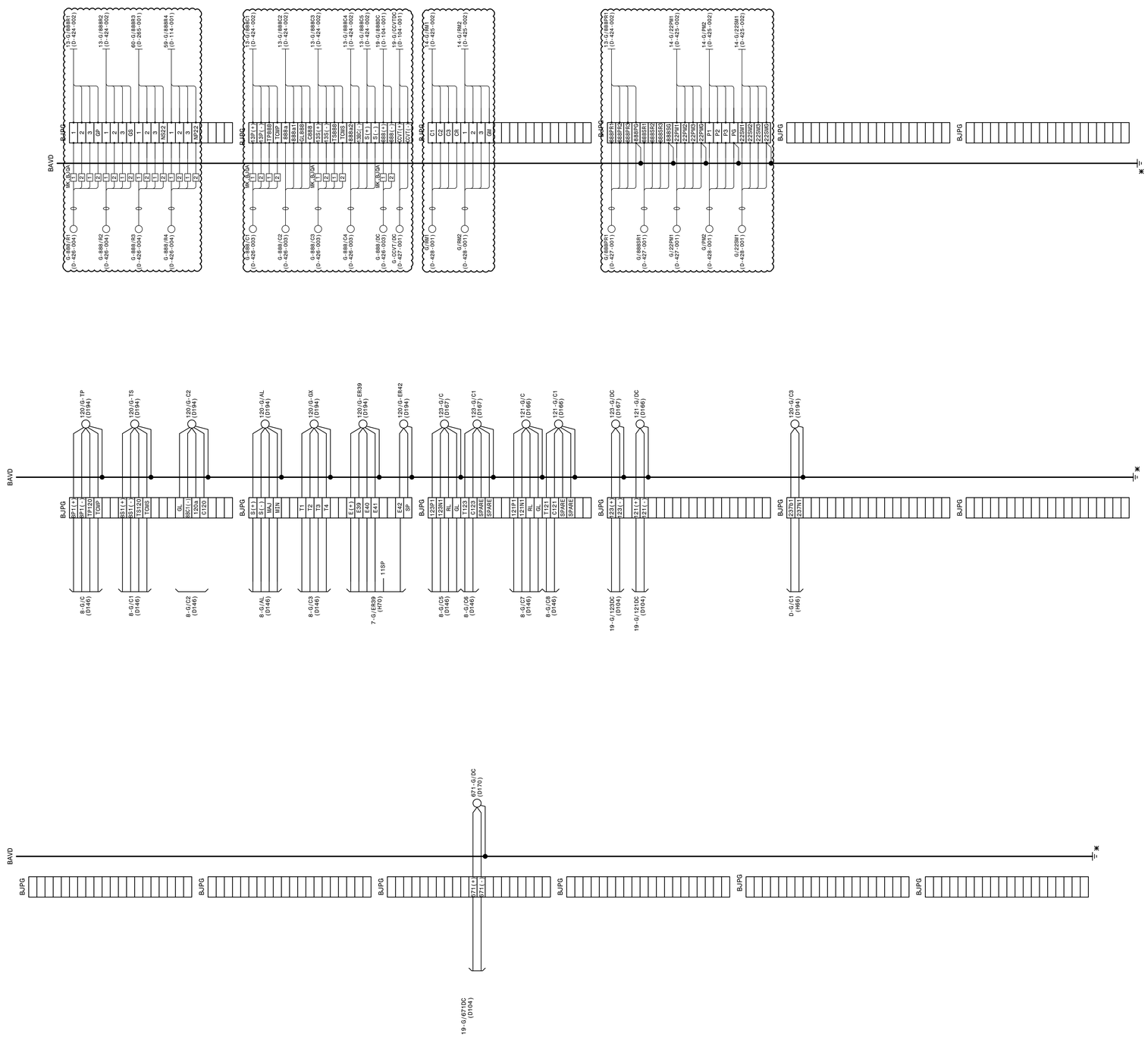

LEGEND:
✱GND. TO GND. BUS IN TRENCH

NOTES:
1. POWER TERMINAL BLOCK MK. BJQA TO BE LOCATED AND INSTALLED BY THE FIELD, AS REQUIRED.
2. CABLES INSTALLED FROM POWER TERMINAL BLOCK MK. BJQA TO BLOCK TERMINAL MK. BJPE TO BE #10.

REFERENCES:

15-371-H17	CONTROL PANEL LAYOUT
15-371-D83	SWBD. CONSTRUCTION DETAILS 32" TERMINATION CABINETS A-H

AUTOCAD ELECTRICAL
THIS DRAWING CONTAINS AUTOCAD ELECTRICAL ELEMENTS

P.I.#1899807

BURNS McDONNELL
9400 BARKLEY BLVD., KL 30270 1001
ATLANTA, GA 30319
PHONE : (770)587-4776
Burns & McDonnell Engineering Co. Inc.
Certificate of Authorization COA#00090
EXPIRATION DATE 6/30/2026
THE REGISTRANT OF THE NEWLY APPLIED SEAL, DATED 00/00/0000, ONLY ASSUMES RESPONSIBILITY FOR THE CHANGES AS INDICATED BY THE FOLLOWING DESCRIPTION:

500KV PCB #120; MOD'S 121, 123, & 671.

| | | |

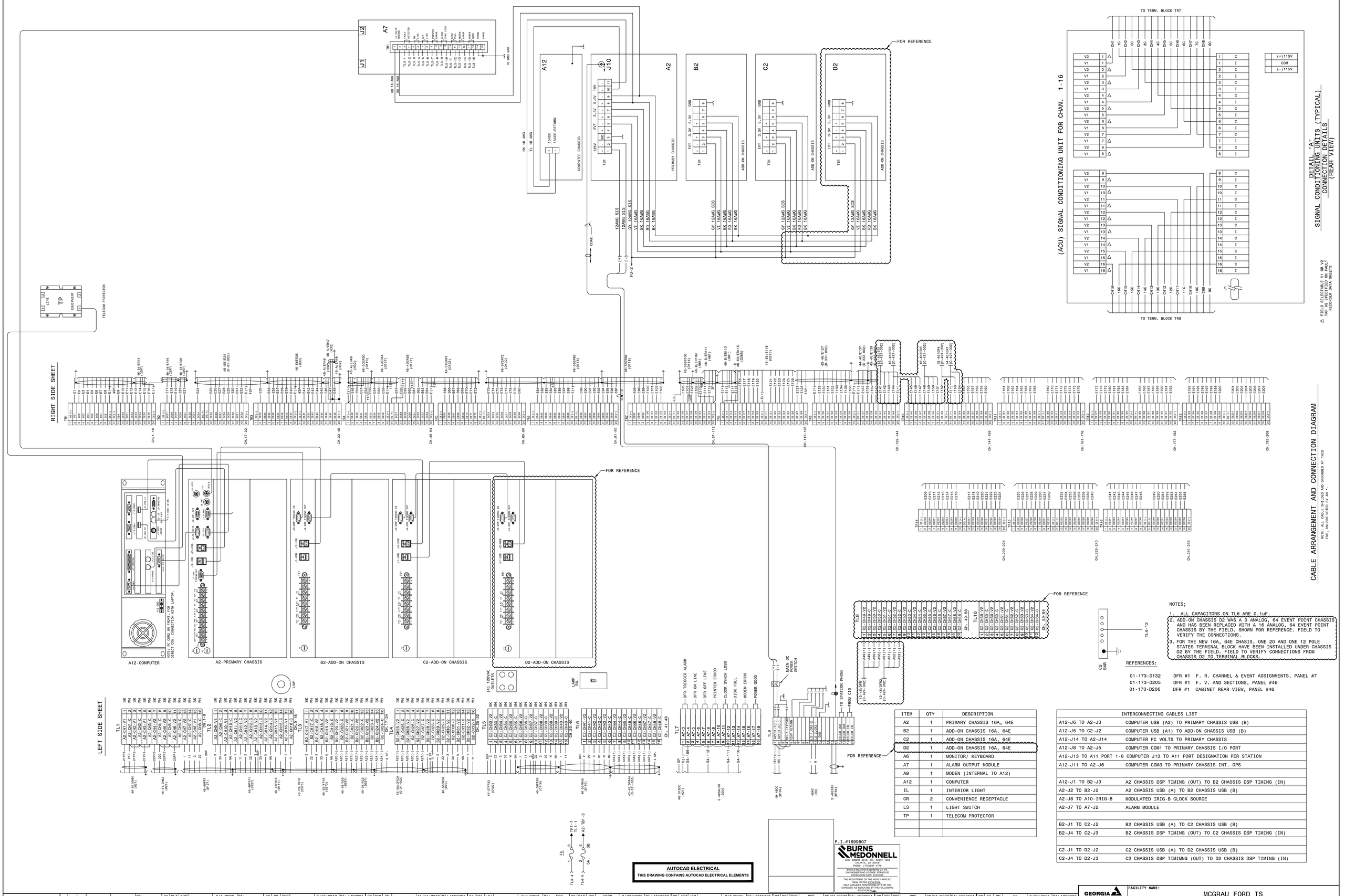

ITEM	QTY	DESCRIPTION
A2	1	PRIMARY CHASSIS 16A, 64E
B2	1	ADD-ON CHASSIS 16A, 64E
C2	1	ADD-ON CHASSIS 16A, 64E
D2	1	ADD-ON CHASSIS 16A, 64E
A6	1	MONITOR/ KEYBOARD
A7	1	ALARM OUTPUT MODULE
A9	1	MODEN (INTERNAL TO A12)
A12	1	COMPUTER
IL	1	INTERIOR LIGHT
CR	2	CONVENIENCE RECEPTACLE
LS	1	LIGHT SWITCH
TP	1	TELECOM PROTECTOR

INTERCONNECTING CABLES LIST	
A12-J6 TO A2-J3	COMPUTER USB (A2) TO PRIMARY CHASSIS USB (B)
A12-J5 TO C2-J2	COMPUTER USB (A1) TO ADD-ON CHASSIS USB (B)
A12-J14 TO A2-J14	COMPUTER PC VOLTS TO PRIMARY CHASSIS
A12-J8 TO A2-J5	COMPUTER COM1 TO PRIMARY CHASSIS I/O PORT
A12-J13 TO A11 PORT 1-8	COMPUTER J13 TO A11 PORT DESIGNATION PER STATION
A12-J11 TO A2-J6	COMPUTER COM3 TO PRIMARY CHASSIS INT. GPS
A12-J1 TO B2-J3	A2 CHASSIS DSP TIMING (OUT) TO B2 CHASSIS DSP TIMING (IN)
A2-J2 TO B2-J2	A2 CHASSIS USB (A) TO B2 CHASSIS USB (B)
A2-J8 TO A10-IRIG-B	MODULATED IRIG-B CLOCK SOURCE
A2-J7 TO A7-J2	ALARM MODULE
B2-J1 TO C2-J2	B2 CHASSIS USB (A) TO C2 CHASSIS USB (B)
B2-J4 TO C2-J3	B2 CHASSIS DSP TIMING (OUT) TO C2 CHASSIS DSP TIMING (IN)
C2-J1 TO D2-J2	C2 CHASSIS USB (A) TO D2 CHASSIS USB (B)
C2-J4 TO D2-J3	C2 CHASSIS DSP TIMIMNG (OUT) TO D2 CHASSIS DSP TIMING (IN)

PI:	01 SLT AJW	9/1/2006	PI:	02 CP TEB	3/13/2012	PI: 1402601	03 BAK TM	11/11/2013	PI: 1500701	04 REL LKJ	2/1/2016	PI: FC8	05 BAS JMH	USPP	3/27/2020	PI: 1616363	06 JCM JCM
	UPDATE INT. AMNNT PER USI AS-BUILTS.CHGD CABLE NAMES: 46-57FR20 TO 46-54FR20, 46-54FR32 TO 46-57FR32,46-57ER13 TO 46-54ER13,46-54ER61 TO 46-57ER61,46-54ER72 TO 46-57ER72. ADDED COMM.CBL CONN.ADDED CBL #4-46COM1.FC336 SWAP PHASES.			ADDED CXT. 46-60/ER115.			REMOVE CABLES 46-53FR16, 46-53ER2. ADD 46-53/FR16, 46-53/FR18, 46-53/E116, 46-53/ER119, 46-53/ER123 DUE TO PANEL #53 REPLACEMENT.			SHOWN FOR RECORD ONLY.			FC#10 (CC): UPDATED STATUS POINT NAMES.			REMOVE CABLES 46-54FR20 & 46-54ER13. ADD CABLES 46-54/A20, 46-54/A22, 46-54/ER13, 46-54/ER16, & 46-54/ER20.

2/5/2021	PI: 1855101	07 BPE BPE	BPE	05/31/2023	PI: 1930501	08 BPE BPE	BPE	08/01/2023	PI: 1930501	09 EG DN	AA	8/20/2024	PI: 1899807				
	UPDATE CONNECTIONS FOR NEW 23OKV BUS 1 PRIMARY AND SECONDARY DIFFERENTIAL PANELS, NELSON LINE PANEL REPLACEMENT AND NEW SVS LINE PANEL AS SHOWN.					UPDATE CONNECTIONS TO PRIMARY AND SECONDARY DIFFERENTIAL PANELS AS SHOWN PER PCA GUIDANCE.				ADD ANALOG AND DIGITAL POINTS FOR PANEL 13 AND DIGITAL POINTS FOR PANEL 14. SEE NOTES 2 AND 3.							

GEORGIA POWER
A SOUTHERN COMPANY

DRAWN:	JLC
CHECKED:	AJW
APPROVED:	
DATE:	5/12/2005

FACILITY NAME: MCGRAU FORD TS

TITLE: 23OKV DIGITAL FAULT RECORDER #1 CONNECTION DIAGRAM PANEL #46

TYPE:	FACILITY #:	NUMBER:	SHEET:	REV:
H-	01-173	71	- 001	- 08

SCALE: N.T.S.
BOM:
ASC FACS:
ALT DWG NUM: