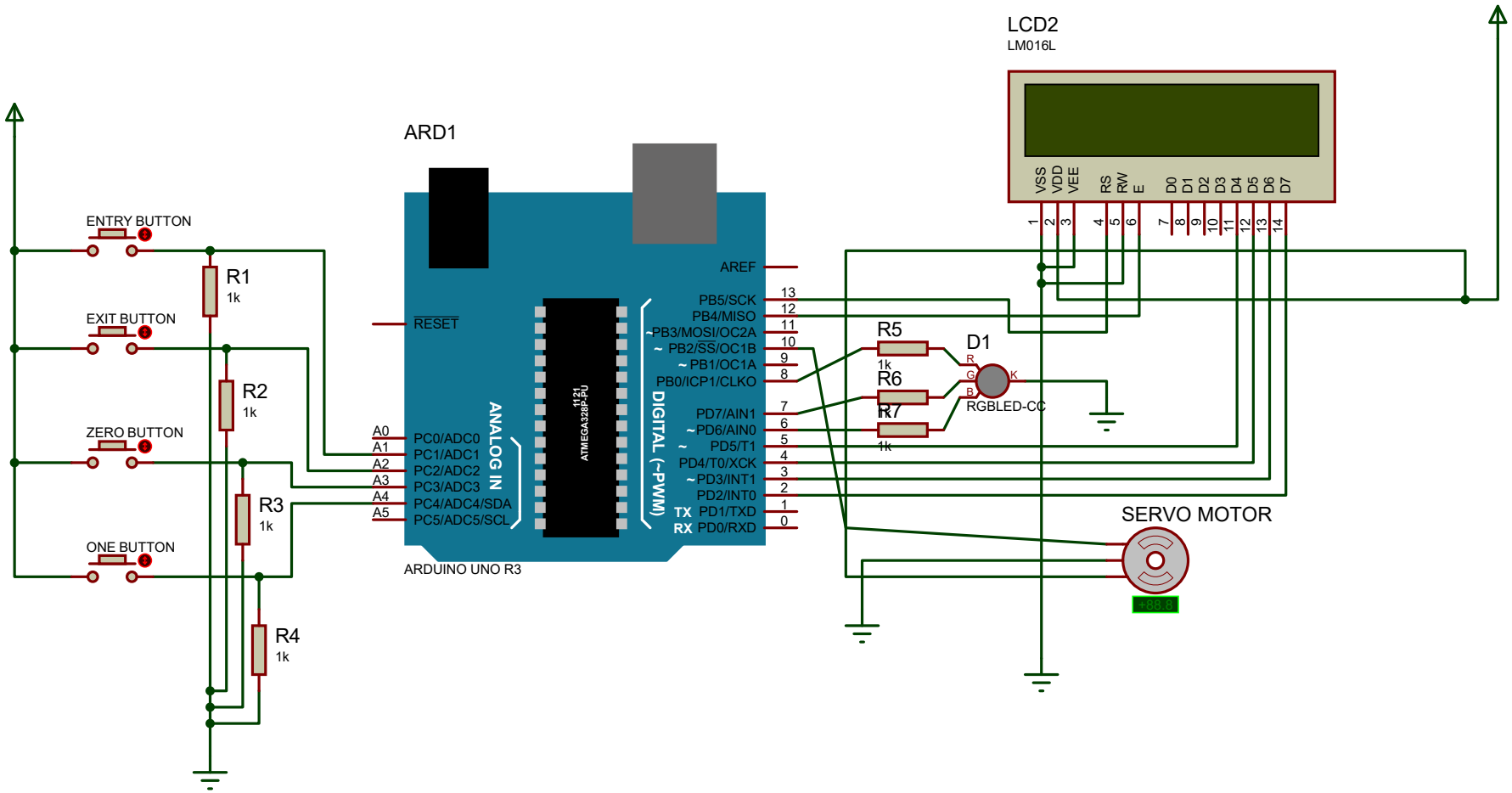
LCD2
LM016L
VSS
VDD
VEE
RS
RW
E
D0
D1
D2
D3
D4
D5
D6
D7
ARD1
ENTRY BUTTON
EXIT BUTTON
ZERO BUTTON
ONE BUTTON
R1
1k
R2
1k
R3
1k
R4
1k
R5
1k
R6
1k
R7
1k
D1
RGBLED-CC
SERVO MOTOR
+88.8
AREF
RESET
PB5/SCK
PB4/MISO
~PB3/MOSI/OC2A
~ PB2/SS/OC1B
~ PB1/OC1A
PB0/ICP1/CLKO
PD7/AIN1
~PD6/AIN0
~ PD5/T1
PD4/T0/XCK
~PD3/INT1
PD2/INT0
TX PD1/TXD
RX PD0/RXD
A0
A1
A2
A3
A4
A5
PC0/ADC0
PC1/ADC1
PC2/ADC2
PC3/ADC3
PC4/ADC4/SDA
PC5/ADC5/SCL
ANALOG IN
DIGITAL (~PWM)
ATMEGA328P-PU
ARDUINO UNO R3