Universität Freiburg

Versuchsanleitung

Fortgeschrittenen Praktikum

Teil II

Muon Mass & Liftime

FORTGESCHRITTENEN PRAKTIKUM II

T. KLAPDOR-KLEINGROTHAUS

Muon Mass & Liftime

INSTITUT FÜR MATHEMATIK UND PHYSIK
ALBERT-LUDWIGS-UNIVERSITÄT
FREIBURG IM BREISGAU

OCTOBER 7, 2017

Contents

1 Aim of the Experiment **1**

2 Outline of the Experiment **1**

3 Required Knowledge **2**

4 Theoretical Considerations **2**
4.1 Fly-through Spectrum . . . 2
4.2 Energy Determination . . . 3
4.3 Decay Time Determination . . . 3

5 Details to the Setup **4**
5.1 Fly-through Spectrum . . . 4
5.2 Energy Spectrum . . . 6
5.3 Time Spectrum . . . 6

6 Execution short **6**
6.1 Recommended Measurement Duration . . . 6

7 Execution long **6**
7.1 Guiding Values . . . 8
7.2 Further remarks . . . 8

8 Remarks to the measurements **8**
8.1 Fly-Through spectra . . . 9
8.2 Pedestal measurement . . . 9
8.3 Time calibration . . . 9
8.4 Background measurement . . . 9
8.5 Photo electron statistic . . . 9

9 Evaluation **9**
9.1 Fly-through Spectra . . . 9
9.2 Energy Determination and Fermi Constant . . . 10
9.2.1 Beta Spectrum Evaluation Methods . . . 11
9.2.2 Time Spectrum . . . 11

10 Hints for the Experiment **13**
10.1 Procedure . . . 13
10.2 Electronics and Broken Devices . . . 13
10.2.1 Geometry . . . 13
10.2.2 Amplifier . . . 13
10.2.3 Single Channel Analyzer SCA . . . 13
10.2.4 Coincidence Units . . . 13
10.2.5 Delay Generator . . . 14
10.2.6 Linear Gate . . . 14
10.2.7 Shaping amplifier . . . 14
10.2.8 Time-to-Amplitude Converter . . . 14
10.2.9 Multichannel Analyzer . . . 14

10.2.10 LED . . . 15
10.2.11 Gate-Delay-Generator . . . 15
10.2.12 Timing Unit . . . 15

11 Hints for the Protocol **16**
11.1 General . . . 16
11.2 Introduction . . . 16
11.3 Execution . . . 16
11.4 Requested Figures (Minimum) . . . 16
11.4.1 Oscilloscope . . . 16
11.4.2 Other . . . 17
11.5 Evaluation . . . 17
11.6 LaTeX . . . 17

12 Questions to the experiment **18**
12.1 Cosmic radiation . . . 18
12.2 Muon decay . . . 18
12.3 Radioactive decay law . . . 18
12.4 Relativistic kinematics . . . 19
12.5 Elementary particle physics . . . 19
12.6 Fermi theory of the weak interaction (V-A theory) . . . 20
12.7 Statistics and error calculation . . . 20
12.8 Bethe Block equation . . . 20
12.9 Scintillation . . . 21
12.10 PM . . . 21
12.11 Electronic questions for the experiment . . . 22

13 Literatur **23**

References **23**

1 Aim of the Experiment

This experiment allows to get an insight to the weak interaction of particle physics by measuring the mass and the lifetime of muons μ, an elementary particle of the Standard Model of particle physics. The weak interaction is one of the four fundamental interactions of nature, beside the strong, electromagnetic interaction and the gravitation. Latter is not yet included in the Standard Model of Particle Physics.
Cosmic muons, which are used in this experiment, are generated in the atmosphere of earth. The weak force describes the decay of muons in electrons and neutrinos like this;

$$\mu \rightarrow e + \bar{\nu}_e + \nu_\mu.$$

The parameters of mass and lifetime, which will be determined in this experiment, can be used to determine the weak coupling constant of Fermi's theory of weak interaction. The mass determination of the muon in the rest frame means that the muon has to be stopped before it decays and the electron energy can be recorded. In order to record the energy an energy calibration of the experiment has to be performed. This can be done by using cosmic muons which pass through the whole detector and deposit a specific amount of energy in average. This mean amount of deposited energy can be calculated by using the Bethe-Bloch formula and the numbers are given below. For the calibrations up to three data points at different energies should be used. The most convenient way is to attenuate the signal by a percentage (Attenuator [dB]) and create by this the other data points. Furthermore, the pedestal measurement will provide the zero-point for these measurements. For these fly-through spectra the interplay of all four scintillators is necessary.

The mass of muons which stop in the detector can be determined from the energy of the electrons, which are emitted by the decay. The mean-lifetime of a muon at rest is around 2.2 µs [2]. Consequently, with a probability of ≥ 99 % the muon decays within 7.5 µs. Thus, the experimental setup has to be set up that it allows to find signals within the complete time range.

The decay time is determined with the left and right scintillator by setting the start point, when both register the muon energy. The stop point is set, when the electron signal is detected. An exponential curve can be measured.

2 Outline of the Experiment

The goal of the experiment is to determine the mass and the lifetime of the muon. But the major part of it is the calibration and the setup of the experiment - **it will require a lot of patience and endurance of the students.** The best friends one can trust - beside the assistant - are the *HEX counter* and the *oscilloscope*. It is absolutely mandatory to check the signal after each electronic device with the oscilloscope before and after the device - make a screen shot of the oscilloscope on a memory stick! In case the measurements fails, a protocol can still be accepted and rated with a good mark, if there is a detailed discussion about the electronics and the principle of the experiment, shown together with reasonable oscilloscope pictures.
⚠Before starting *real* measurements, set up the whole experimental setup, for energy calibration, mass and time determination, and check if you see everything you want to see later at the PC, too. If this is accomplished, you can start to the measurements. Otherwise you will lose a lot of time, when you realize too late that you have to change something. After the energy calibration is done, it is not

allowed to change anything at the experiment as it will change the energy calibration and it has to be repeated.
It is recommended to start with the checking the functionality of all photomulipliers. The correct settings of the discriminators will influence the measured spectra drastically. Do not be frustrated about broken devices or cables - that's the life of a physicist.
Set up the setup of the fly-through spectra and do some test measurements and ensure that you can evaluate them. Find the decay electron on the oscilloscope and do some test measurements if it can be recorded with the PC. Perform a calibration of the Time-To-Amplitude Converter & ADC. Use the calibration from the Fly-Through Spectra to do the energy measurement of the electrons.

3 Required Knowledge

Muons are elementary particles described in the Standard Model (SM). Like electrons they are leptons and interact by weak and electromagnetic force. This pose many questions:

- Where do cosmic muons come from?
- How is their creation described in the SM?
- How can they decay?
- How is their energy distribution explained?
- What does mean-life time mean?
- How are muons stopped?
- Which processes are responsible for the energy deposition in the scintillator?
- Which formula describes the energy deposition and from does it depend?
- What are MIP's?
- Which muons can be stopped? Which will go through?
- How is the energy loss of the muons, which are going through, distributed?
- Under which circumstances can they used for energy calibration?
- Which errors have to be considered?
- What limits the detector resolution?

Further questions which you should able to answer are summarized in chapter 12.

⚠ Measurement protocol ⚠

Write the progress of your experiment down by hand. It is absolutely necessary to hand it to your assistant on the last day of measurement. The original has to be attached to the later protocol.

4 Theoretical Considerations

4.1 Fly-through Spectrum

In order to do a proper energy calibration of the system the mean-deposited energy of a fly-through muon has to be calculated. The calculation is based on the Bethe-Bloch equation. To get an estima-

tion the following numbers should be used:

$$\frac{\partial E}{\partial \rho x} = 1.95(5)\,\mathrm{MeV\,cm^2\,g^{-1}} \qquad \text{MIP}$$

$$\rho = 0.87(1)\,\mathrm{g\,cm^{-3}} \qquad \text{density of liquid scintillator}$$

$$s = 84(5)\,\mathrm{cm} \qquad \text{mean free path in tank}$$

How large is the mean-deposited energy?

The shape of these spectra is based on a convolution of a Gaussian and a landau distribution. The Gaussian part is based on the electronics, while the landau part is based on physics. For the evaluation of these spectra a convoluted function should be used as a fit function.

4.2 Energy Determination

As the muon decays in three particles, the maximum energy of one of these particles is half of the energy of the muon. Consequently, the electron can has an energy of half of the muon mass, as the muon is at rest when it decays. This causes the sharp edge at around 50 MeV.
In figure 1 the beta spectrum is shown in blue. In addition, the red line shows the limitation of the experiment due to the geometrical dimensions. Furthermore, additional influence of the electronics will expect us a shape like it is shown in the picture in green.

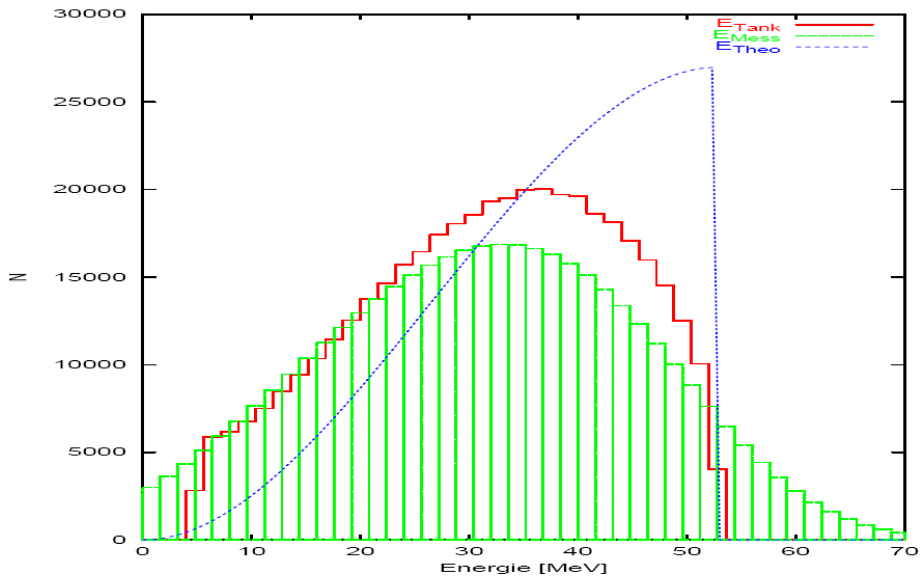

Abb. 2: Simulation des Beta-Spektrum

Figure 1: *Circuit of the experiment*

4.3 Decay Time Determination

As known from nuclear physics the decay law is based on a decreasing exponential function. This is also reproduced in this experiment.

5 Details to the Setup

The circuit for the fly-through measurements and the energy and time measurement is shown in figure 2. The timing of the signals can also be seen in figure 3 and 4.

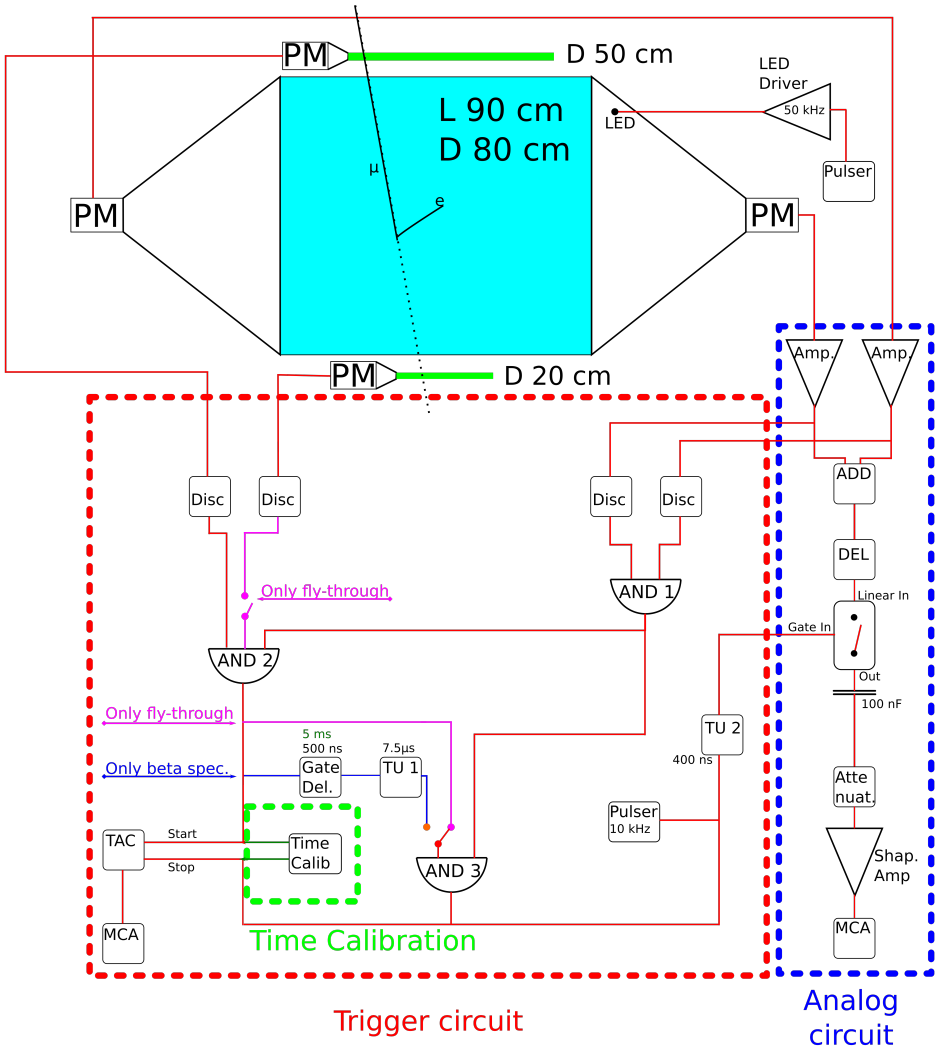

Figure 2: *Circuit of the experiment*

5.1 Fly-through Spectrum

- As the particle has to fly through the tank, upper and lower scintillator have to give a signal. The coincidence of this signal is checked in `AND II`
- Furthermore, left and right PM have to give a signal simultaneously which is connected in `AND I`

  The connection between `AND I` and `AND II` is necessary for the energy spectrum and is explained there.
- `TU II` opens a gate at the linear gate to let the analog signal pass through.

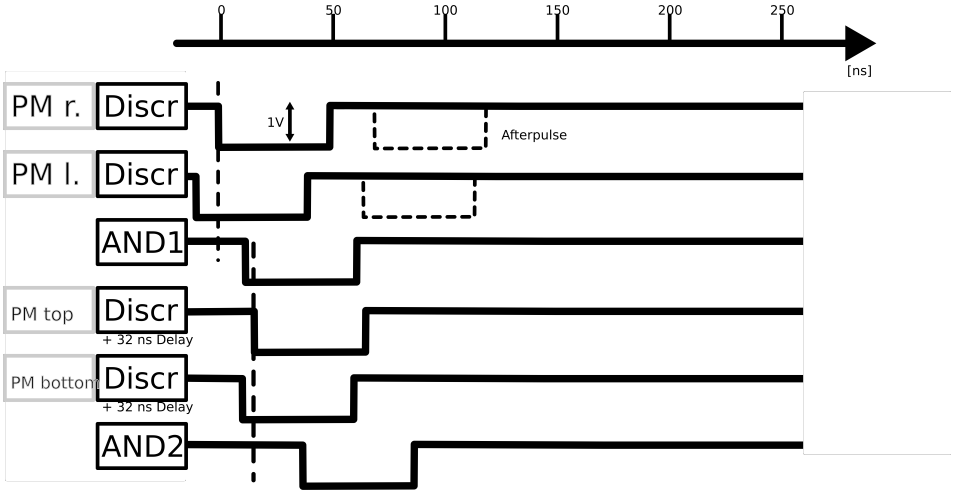

Figure 3: *Order of signals for fly-trough spectrum*

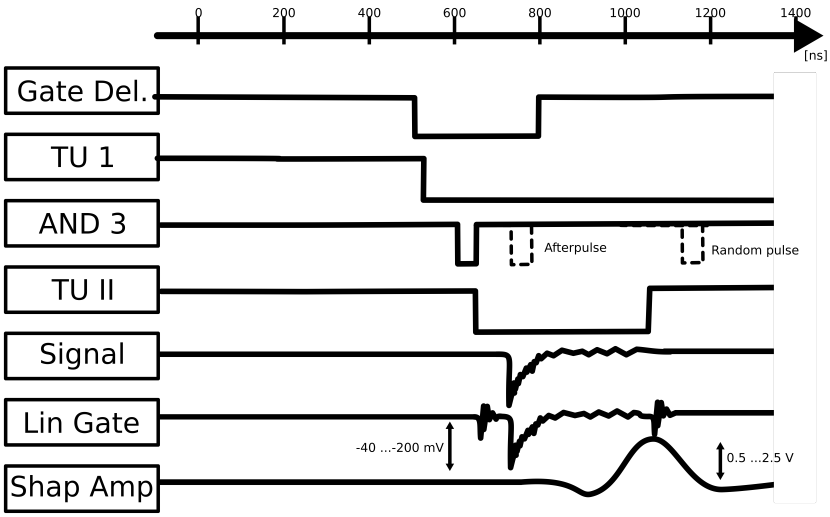

Figure 4: *Order of signals for energy and time measurement*

- The analog signal of left and right PM is summed up. The limitation of the `ADD` is 2 V. The delay is necessary to shift the analog signal into the gate, as the trigger logic takes some time.
- When the signal passed through the gate it should be smoothed by a condensator.
- An attenuator is necessary to shrink the signal that the shaping amplifier can handle it (< 80 mV.

5.2 Energy Spectrum

- For the decay of the muon it has to be ensured that the muon was stopped in the tank. Thus a coincidence of upper, left and right PM is sufficient.

  The connection between `AND I` and `AND II` is necessary as it ensures that it is a muon that triggers the opening of `TU I` and not anything else.

- The coincidence which tells that a muon was stopped generate a long time window by using the `Gate Delay` and the `TU I`. The `Gate Delay` ensures, that the `AND III` will not a coincidence with a muon again but with the decay electron.
- As above the coincidence of `AND III` will open the gate for the analog signal of the electron.

5.3 Time Spectrum

- The coincidence of the muon, created by upper, left and right PM will start the `TAC`.
- The coincidence at `AND III`, caused by the electron, will stop the TAC.

6 Execution short

1. Set up the experiment to determine the fly-through spectra. Record data for ~ 10 min to check the proper setup. Take several oscilloscope screenshots. Repeat the measurement with attenuated signals of the energy signal.
2. Set up the experiment for the energy measurement. Check on the oscilloscope if you can see the muon and the electron in the signal from the left and right scintillator. Make a short measurement to check the shape of the curve.
3. Do a calibration of the Time-to-Amplitude Converter with the oscilloscope.
   Prepare the timing measurement and check the shape on the PC.
4. Do a photoelectron spectrum of the PM using LED's and a pulse generator.

6.1 Recommended Measurement Duration

7 Execution long

1. The signal of the upper and lower scintillator are already amplified. Put them directly in the discriminator and find proper rate of muons by choosing the discrimination levels and using the HEX counter.

Measurement	Exp. Time to Setup	Minimum [h]	Recommended
Fly-through (100 %)	1 day	6	12
Fly-through (50 %)	5 min	6	
Fly-through (25 %)	5 min	3	
Pedestal	20 min	0.1	1
β & time spectrum	1 day	≥ 24	≥ 48
Time calibration	30 min	10 min	
Photoelectron statistic	1 h	30 min each	1 h each

Table 1: *Recommended Duration of Measurements*

2. The signals of the left and right scintillator have to be amplified. One output each will be connected to the Fan-in-Fan-out device, which adds up the signal. Consider that the FIFO will go into saturations at 2 V. The other output will be connected to discriminators, where a proper level has to be found again.
3. Connect the further setup as indicated in the chapter *Setup* and check after each device is the signals behave as you expect.
4. In order to fit the energy signal into the gate, it has to be delayed by using delay units.
5. Before the signal from the gate-unit can be fed in into the shaping amplifier it has to be attenuated as the shaping amplifier can handle signals up to 80 mV.
6. Record proper oscilloscope screenshots, which show the interplay of the devices and the way digital and analog part of the setup.

...

7. Measure the energy-loss spectrum of the muons passing though the tank. Repeat the measurement with attenuated signals of the energy signal. **A basic attenuation of ca. 16 dB has to be considered.** From the different energy-loss spectrum and the expected attenuation value it is possible to do an energy calibration. If possible, three energy-loss spectra should be recorded and its information should be used in combination with the pedestal measurement for the energy calibration (e.g. 100 %, ~50 %, ~25 %, it is your decision! → Calculate the dB). Consider the **non-linear behavior** of the electronics and the MCA. Discuss the shape of the spectrum in respect to your expectation, which is based on the geometry of the experiment.
8. Calculate the most probable energy loss of the fly-through muons. Execute a measurement of the pedestal of the spectrum to get a zero-point. Calibrate the energy spectrum with your recorded data.
9. Calibrate the time spectrum by using the time-pulse generator and the Time-to-Amplitude Converter (TAC). The indicated times on the time-pulse generator have to be verified with the oscilloscope and the real values have to be used in the further evaluation.
10. Measure the background for the time and β spectrum. To do so, you have to verify that there is no correlation between the gate opening and the signals. One of options is to change the delay of the Gate-Delay-Unit to maximum. Discuss the possible influence of the setup on the measurement.
11. Take a time spectrum of the decay electrons of the muon decay and determine the mean-life time of the muons.

12. Take a beta spectrum of the muon decay. Discuss the shape of the spectrum in comparison to the expectation and explain how the mass at rest can be determined. Explain the "shoulders" at small energies.
13. Determine the point of maximal energy of decay electrons at a height of a reasonable part of the maximum counting rate of the spectrum. Consider qualitatively the results from the measurement of the photon-electron statistics.
14. Estimate from the measured mean life time and the determined mass at rest the coupling constant of the weak interaction. Calculate the transition matrix of the muon decay. Compare it with the literature and discuss possible errors.
15. Use the pulser and LED driver to have a constant blinking of the LED's in front of the PM. Use the smallest possible light intensity not to damage the PM. Take measurements at least at three different energies.
16. Measure the photon-electron-statistics of the PM in the tank and explain how this influences the energy measurement.

The main measurement lasts at least 2 days. The following steps are necessary: **It is recommended to connect the circuit step by step. Check the function of each device carefully with the pulse generator and the oscilloscope. Consider a reasonable signal height to cause no damage to the devices.** All signal cables have to be closed with 50 Ω. The signal should be set in such way that a big dynamic range is covered and decays with low energies can be discovered, too. This will be done with discriminator levels. As different settings can influence each other it is recommended to measure the different spectra each by their own. Considering the count rate, pulse height and the shape of the curve the setting can be checked.

7.1 Guiding Values

The following values can be used as guiding values

- Pulses at the shaping amplifier input ≤ 100 mV
- Fan in Fan out (FIFO) ≤2 V
- Pulses after amplification of the left and right PM ≤1 V
- Use additional delays to create a coincidence of the energy-photomultiplier

Discuss the results with your assistant! This reduce the number of errors and will guide you to great success. After the optimization the long term measurements should be started.

7.2 Further remarks

The progress of the measurements, the circuit plans and settings have to be written by hand to a protocol. This protocol have to be signed by the assistant at the end of the experiment. The original protocol has to be attached to the evaluation protocol.

8 Remarks to the measurements

General: It might be useful sometimes in the experiment to use the included discriminator of the MCA to cut away noise peaks, which cause such a high dead time, that the measurement cannot be done otherwise. But one should **never** forget, that the noise belongs to the measurement too. That

means for setting your experiment up and optimizing it, it might be useful. For the final measurements is should be removed or adjusted to a minimum.

8.1 Fly-Through spectra

The coincidence of all 4 PM signals the fly-through of a muon. The energy spectrum should agree with a Landau distribution. As the highest energy values are expected here, this measurement can be used to check the linearity of the electronics as well as the expected pulse heights. **In case of getting not the asymmetric Landau distribution the electronics might be in saturation. The attenuator can be used in case of the optimization of the setup cannot be changed again.**
Determine the most probable energy loss for a MIP in the tank.

8.2 Pedestal measurement

The purpose of this measurement is to determine how much energy is measured by the setup if there is no signal. For this, the linear gate is opened by a pulse generator and the events will be measured at the MCA. Ensure that the gate time is the same as for the fly-through and beta measurements. Set your pedestal that at least 3/4 of the peaks can be seen with the MCA.

8.3 Time calibration

Connect the Time-to-Amplitude (TAC) converter with the timing device in the crate. There should be sharp signals at the MCA. Calibrate the time axis with many different timings - verify the indicated times of the calibration device with the oscilloscope and consider deviations.

8.4 Background measurement

To perform a background measurement shift the coincidence time by several orders (500 ns → 5 ms). Any registered events now, cannot come from muons. Determine the rate as the background for the time measurement. The background measurement will be subtracted from the beta spectrum.

8.5 Photo electron statistic

A LED will be used to deposit light in the tank. It can be assumed that is every time the same amount. The energy distribution should be measured. Start with the lowest values for the LED and increase slowly.

To much light destroys the PM!

Set the energy to the expected in the beta spectrum. The number N of primary electrons can be estimated from the relative error

$$\frac{\sigma}{\bar{x}} \approx \frac{\sqrt{N}}{N}$$

What affects the energy resolution?

9 Evaluation

9.1 Fly-through Spectra

The Fly-through spectrum convolutes from the expected landau distribution and a Gaussian one. The latter contribution is caused by the limited accuracy of the photomultipliers.

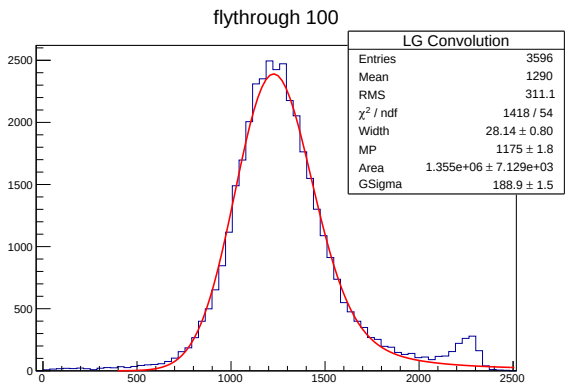

Figure 5: *Example of fly-through spectrum and langau fit*

Consequently a convoluted function has to be fitted to this measured spectrum. There are several ways to do it. One of them is to use `root` and the macro which can be downloaded or ask you assistant. Don't be shocked by `root`, the macro is very easy. The variable *Int_t data[<number of entries>] = <your data>* has to be filled with the data from the measured histogram. Then there are four parameters which have to be adjusted. To guess starting values, it might be recommended to do a Gaussian fit before and use its result to adjust these four (see table 2).

pllo[0]	lower boarder of the width of the landau density
plhi[0]	upper boarder of the width of the landau density
pllo[1]	lower boarder of Most probable parameter of the landau density = expected value
plhi[1]	upper boarder of Most probable parameter of the landau density = expected value
pllo[2]	lower boarder of the total area of the fit = normalization constant
plhi[2]	upper boarder of the total area of the fit = normalization constant
pllo[3]	lower boarder of the with (sigma) of the convoluted Gaussian function
plhi[3]	upper boarder of the with (sigma) of the convoluted Gaussian function

Table 2: *Parameters of the `root` macro for the fit of the convolution of Gaussian and landau distribution*

9.2 Energy Determination and Fermi Constant

The theoretical expected beta spectrum is falsified by the tank dimensions and the energy resolution. How can the beta edge be estimated with the measured data?
The time and energy axes are calibrated with a linear fit and their precision has to be determined. Which influence do the energy resolution and the tank dimensions have to the measured beta spectrum? How can the muon mass be determined from the measured spectrum? Which effects affects the mean life time? In which area is a fit reasonable? The fermi constant will be determined from the total decay width of the muon:

$$\tau^{-1} = \Gamma = \frac{G_F^2 \cdot m_\mu^5}{192 \cdot \pi^3}$$

9.2.1 Beta Spectrum Evaluation Methods

1. The theoretical differential β-spectrum has a polynomial form:

$$\frac{d\Gamma}{dE_e} = \frac{G_\mu^2}{12\pi^3} m_\mu^2 E_e^2 \left(3 - \frac{4E_e}{m_\mu}\right).$$

   All measured spectra will be normed by dividing by their measurement time to determine the rate. The background spectrum will be subtracted. Furthermore, the Photo-electron statistic has to be considered, so that the β-spectrum has to be convoluted with a Gaussian function of variable scale factor and variable width σ. Following functions might be determined:

$$F_1(x) = \int_{-\inf}^{\inf} \frac{A(\tau)}{\sqrt{2\pi\sigma^2(\tau)}} \exp\left(\frac{(x-r)^2}{2\sigma^2(\tau)}\right) \cdot \frac{G_\mu^2}{12\pi^3} m_\mu^2 \tau^2 \left(3 - \frac{4\tau}{m_\mu}\right) d\tau$$

   Maybe a look into the *Staatsexamensarbeit* might help.
   ⇒ The fit function is probably not analytical solvable, meaning that the integral has to be done numerical. There is a function in *Mathematica* which might give an analytical result: `Convolve[PDF[NormalDistribution[`μ`,`μ`/3],y] × HeavisideTheta[`μ`-y], PDF[NormalDistribution[0,`σ`],y],y,x]`. **This special convolution of this function has to be motivated well in the protocol!**

2. Fermi-Kurie Plot
   The Fermie-Kurie plot will show a straight line, if the β-spectrum is perfect. The intersection with the x-axis indicates the maximal energy of the electron. As there is a Gaussian background contribution the straight line might be bend down at its beginning and end. The plot is made by plotting $y(E)$ over the energy E:

$$y(E) = \frac{\sqrt{n(E)}}{E}.$$

   The error estimation as to be done correctly with:

$$s_y = \sqrt{\left(\frac{s_n}{E \cdot 2\sqrt{(n)}}\right)^2 + \left(\frac{\sqrt{n}}{E^2} \cdot s_E\right)^2}$$

3. Fermi - Flank
   The Fermi-Flank can be fitted at the edge of the β-spectrum to determine the maximum energy. The fermi function describes values that are distributed around a sharp edge, called the Fermi energy. Since this is very similar to this problem here, it can be used:

$$y(x) = 1/\left(\exp\left(\frac{x - x_0}{dx}\right) + 1\right).$$

   There x_0 is the center and the maximum energy of the electrons; dx: time constant which describes the decrease of the flank.

9.2.2 Time Spectrum

The time spectrum is evaluated by fitting an exponential decay function:

$$f(t) = A \cdot \exp\frac{t}{\tau}$$

to determine the mean life time τ.

10 Hints for the Experiment

10.1 Procedure

1. Identify the devices you want to use in your experiment
2. Use the oscilloscope to observe the signal after each device you're using.
3. Use **all 4 channels** of the oscilloscope to check the correct and reasonable work of the Coincidence units, you're using.
4. Coincidences: Use the counter with a reasonable measurement time to see differences while adjusting the threshold.

→ use the sheet *Hints for the protocol* in case you don't have any idea what you can display on the oscilloscope

10.2 Electronics and Broken Devices

This section summarizes briefly the basic information of most of the electronic modules of this experiment. It will support the understanding of the logic of the electronic which leads to a correct usage for calibration and measurement. Here, the questions: *What is happening at the output, if I apply different signals in the input?* and *Which manipulations of the outgoing signals do I have?* should be answered.

10.2.1 Geometry

Check the position of the lower PM in respect to the position of the upper one. This geometry might not be reasonable for this experiment?

10.2.2 Amplifier

An amplifier increases the incoming analog signal and provide the amplified signal at the output.
Use that one, where blue tape covers some channels. But be careful: this doesn't imply that the other channels are working correctly.

10.2.3 Single Channel Analyzer SCA

Discriminators accept analog input signals (e.g. from photomultipliers) and generate a standardized output signal, if the input signal is above a certain level. This level can be set by the user. Discriminators connect the analog signal processing with the digital logic. Usually the input signal has to be negative.
Check **always** the counting rates with the HEX Counter
For the Tank-PM a counting rate of ~ 3e5 - 4e5 signals per second might be fine - as it was reported from former groups.

10.2.4 Coincidence Units

Coincidence units accept several logical signals and generate logical signals. One can chose, using the switches, which signals have to arrive simultaneously. Only then, an output signal will be generated - this is also called a logical `AND`. Beside the two logical output signals there is one channel which provides an inverted logical signal and two outputs that provide the sum of the input signals. Those, which are covered by tape are probably broken but this is not proved

10.2.5 Delay Generator

A delay generator is usually a bunch of long cables which are squeezed into a box.
Take care about:

- be careful: some delays attenuate the signal stronger than others
- sometimes the order of plugging them together matters in respect to the signal attenuation
- recommendation: start with delay ...

10.2.6 Linear Gate

A gate signal with an adjustable length has to be applied to the gate input. Then the gate opens and allows analog signals to pass through the device. This means, by using a trigger electronic which provides the gate signal it is possible to select desired analog signals for further data processing. One has to take care about that the analog signals fits perfectly and completely in the applied time window.
The linear gate in this experiment has a switch which allows to switch between a permanent open gate and the applied gate input signal. The potentiometer can be used to change the influence of the logic gate signal on the analog output signal. Furthermore, this device provides a very small DC pedestal as long as the time window is applied. This pedestal can be adjusted to 0 or can be used to generate the so called "Pedestal". The pedestal corresponds to the zero-point measurement, which are usually not just 0, as the experimental setup influences all measured spectra.
Not sure if both are working correctly. In the current configuration the right one was used recently.

10.2.7 Shaping amplifier

This is an amplifier which additionally forms the shape of the signal. An analog input signal, where the information is stored as charge, will be integrated and differentiated. From this information the shaping amplifier generates a slower voltage pulse which height corresponds to the charge of the input signal.

- check the signal height before and after the shaping amplifier
- the saturation of the shaping Amplifier is hard to see on the oscilloscope
- even the signals looks just perfect on the oscilloscope → usually a little bit more attenuation is necessary for good spectra

10.2.8 Time-to-Amplitude Converter

A TAC measures the time difference between two logical pulses which are applied separately at the Start and Stop input. It generates a slow voltage pulse which height is proportional to the time difference.

10.2.9 Multichannel Analyzer

- channel 1 is used for timing measurements
- channel 2 is used for energy calibrations

10.2.10 LED

- check all the signals of the pulse generator and the LED driver at the oscilloscope
- before connecting the LED driver to the LED check the output on the oscilloscope → check the offset of the input signal
- **Switch off the HV of the PM's** and take the LED out of the tank and check if its working → probably one soldering connection is broken at the right one
- later a repetition time of 100 µs in a combination with 20 ns pulse width might be reasonable

10.2.11 Gate-Delay-Generator

The device generates a logical output signal if a logical input signal is applied. The output signal can be adjusted in its width and can be used as a gate signal. In addition, the output of the signal can be delayed. This device has to independent channels which can process negative NIM signals or positive TTL signals.

10.2.12 Timing Unit

If a negative signal is applied a logical signal with adjustable width is generated. The width of this signal is more stable and the slope of the flanks is larger than at a gate-delay-generator.

11 Hints for the Protocol

This short list points out which additional aspects you have to consider when you're writing your protocol. It is expected that you use your skills writing scientific texts in general.

11.1 General

In respect to your scientific career you're asked to write the protocol in English.

11.2 Introduction

Please answer the questions from the "long manual" about:

- Cosmic muons
- Muon decay
- Radioactive decay law → mean lifetime & half life
- Relativistic kinematics
  - lifetime of a muon in laboratory system at different energies
  - discuss the decay of pions in electrons and muons
- Elementary particle physics
  - Describe very shortly where/how the muon is described in the Standard Model
- Bethe Bloch equation
- Statistics
- Scintillator and Photomultiplier
  - Describe it very briefly, so that is possible to understand why/how you used it in the experiment
- what is dB?

Please don't write your protocol like a FAQ. Try to produce a nice text which covers the questions.

11.3 Execution

- Describe how the devices you're using work briefly (including the detector)
- Point out the characteristics/anomaly/features/bugs of the devices you're using
- justify your settings of devices

11.4 Requested Figures (Minimum)

11.4.1 Oscilloscope

The essential figures are like these:

A:
- muon enters tank
- muon decay and electron
- AND III
- AND I

B: like A but with after shaping amplifier

C:
- signal at linear gate
- after AND I, AND II and AND III

D:
- Start & stop of TAC
- output of the TAC

E: Pulse and LED driver in combination with the signal of the PM

Other figures of the oscilloscope are necessary, too. Think about reasonable configurations. Add text in the figures so it is easy to see, what color belongs to which signal.

11.4.2 Other

- add all spectra you've measured, which are relevant for the experiment
- photographs of the experimental setup

11.5 Evaluation

- Check the error calculations
- Consider that all measured spectra have to have the same number of channels
- Create readable plots with errorbars → consider the theory in respect of fitting the correct functions
- the size of the figures should be large enough and put the name on the axes

11.6 LaTeX

µ The µ has to be upright in text and in units. You can use the package *siunitx* to fix this. Further information can be found here `https://physics.nist.gov/cuu/Units/checklist.html`.

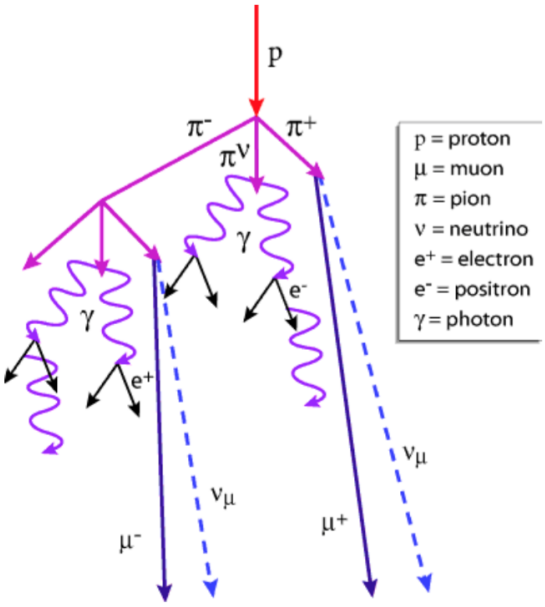

Figure 6: *Example of shower produced by a primary cosmic ray.*

12 Questions to the experiment

12.1 Cosmic radiation

- How is it created?
- What is its intensity and energy distribution
- Which particles are created and which processes occur in the atmosphere
- Angle of incidence at sea level. Lateral dimension?
- Proportion of negative to positive muons?

12.2 Muon decay

- Decay channels of muons?
- How large are the relative probabilities?
- Are there differences between negative and positive muons?
- How does the energy spectrum looks like of the measurable particles?
- Which processes could be happen in matter if the muon is at rest? Are there differences between positive and negative muons?

12.3 Radioactive decay law

- What is the mean life time of a particle
- In which system is it defined?
- What are the preconditions for the validity of the radioactive decay?

- Is the expected mean life time of a human in relation to the radioactive decay law?

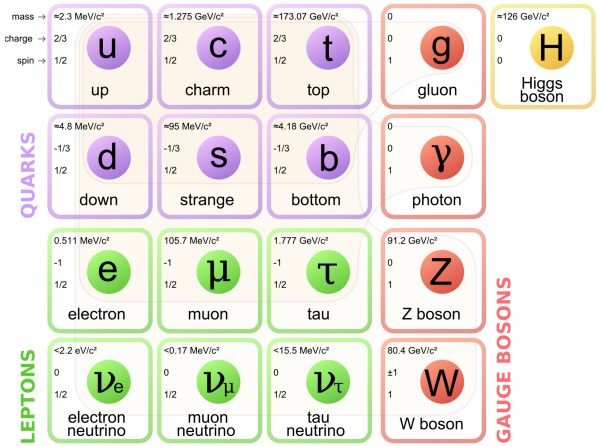

Figure 7: *The Standard Model of elementary particles, with the three generations of matter, gauge bosons in the fourth column, and the Higgs boson in the fifth.*

- What is the difference between radioactive half-life and the life time?

- How does the differential equation looks like?
- Determine the life time:
  With a given amount of a radioactive substance the exponent of the radioactive decay law could be measured with one measurement since

$$\ln(N) - \ln(N_0) = -\lambda \cdot t$$

  In this experiment it is possible to measure the rates in the time intervals $\Delta t = t_i - t_{i-1}$. This immediately leads to a transcendental equation. Instead the linear relation between $\ln Z$ and t should be used. Which conditions have to be fulfilled by the time intervals?

12.4 Relativistic kinematics

- What is the Lorentz transformation and how is it different from the Galilei transformation?
- Derive the kinematic relation of $\beta = \frac{p}{E}$ and $\frac{E}{m}$
- How long do muons live in the laboraty system if they have a momentum of 10.5 GeV? What is it if the momentum is 140 MeV?

- Why is the momentum spectrum of the electrons from the muon decay not a linear line?
- Calculate the momentum for muons from the decays from charged kaons and pions.
- why can the π^0 decay in $\gamma\gamma$ and in $\gamma e^+ e^-$ but not in $\gamma \mu^+ \mu^-$?

12.5 Elementary particle physics

- What are bosons, hadrons, mesons, leptons and quarks? Is there any systematics? What are generations?

- Which are the fundamental interactions. In which relationship are the coupling forces? How does it affect the life time of the elementary particles and their excitation states? When is a particle stable?
- Which are the most important quantum numbers? Under which interaction they are (not) conserved? What is parity and where is it violated? What is helicity?
- Which types of reactions with elementary particles do you know? How does the cross section affect the interactions? What does this mean in respect to neutrinos?

12.6 Fermi theory of the weak interaction (V-A theory)

12.7 Statistics and error calculation

- In a series of measurements the mean length of a rod is determined as well as σ. How large is the probability that if the measurement is repeated the result differs more than σ from the previous determined value?
- A scintillator registers 169 muons in one minute. How large is σ in this measurement.

- In the evaluation of the experiment the counting rates are logarithmic. How large is σ from $\ln Y$, $\sqrt{Z}$ and $\ln\sqrt{Z}$.
- Consider 2 statistical processes with a mean frequency of $\nu_1 = 10\,\mathrm{s}^{-1}$ and $\nu_2 = 10\times10^2\,\mathrm{s}^{-1}$. The first one durates 10×10^5 s and the latter one is "infinite". In which frequency random coincidences occur? How does this frequency change if both durate 10^{-5} s?

12.8 Bethe Block equation

- How is the shape of the equation (qualitative)
  → see fig 9
  Formula see fig 8
- In which energy ranges do which processes occur?
- Which differences are between different types of particles?

- What does minimal ionizing mean?

- What is described by a Landau distribution?

- Until which particle energies do 80cm diesel fuel stops muons?
  Muon mass: 0.105 GeV
  Density of diesel: $0.86\,\mathrm{kg\,L^{-1}}$

$$\text{stopping range} = \frac{\text{length of tank}\cdot\text{density of material}}{\text{mass of muon}}$$
$$x\left[\frac{g}{cm^2\cdot GeV}\right] = 80\,\mathrm{cm}\frac{1000\,\mathrm{g}\cdot0.86}{0.105\,\mathrm{GeV}\cdot10^6\,\mathrm{cm}^3}$$
$$x = 6.5$$
$$\Rightarrow \mathrm{m}_\mu = 50\,\mathrm{MeV}$$

The correct quantum-mechanical calculation was first performed by Bethe, Bloch and other authors. In the calculation the energy transfer is parametrized in terms of momentum transfer rather than the impact parameter. This, of course, is more realistic since the momentum transfer is a measurable quantity whereas the impact parameter is not. The formula obtained is then

$$-\frac{dE}{dx} = 2\pi N_a r_e^2 m_e c^2 \rho \frac{Z}{A} \frac{z^2}{\beta^2} \left[\ln\left(\frac{2 m_e \gamma^2 v^2 W_{max}}{I^2} \right) - 2\beta^2 \right]. \tag{2.26}$$

Equation (2.26) is commonly known as the *Bethe-Bloch formula* and is the basic expression used for energy loss calculations. In practice, however, two corrections are normally added: the *density effect* correction δ, and the *shell* correction C, so that

$$-\frac{dE}{dx} = 2\pi N_a r_e^2 m_e c^2 \rho \frac{Z}{A} \frac{z^2}{\beta^2} \left[\ln\left(\frac{2 m_e \gamma^2 v^2 W_{max}}{I^2} \right) - 2\beta^2 - \delta - 2\frac{C}{Z} \right], \tag{2.27}$$

with

$$2\pi N_a r_e^2 m_e c^2 = 0.1535 \text{ MeVcm}^2/\text{g}$$

r_e: classical electron radius $= 2.817 \times 10^{-13}$ cm
m_e: electron mass
N_a: Avogadro's number $= 6.022 \times 10^{23}$ mol^{-1}
I: mean excitation potential
Z: atomic number of absorbing material
A: atomic weight of absorbing material
ρ: density of absorbing material
z: charge of incident particle in units of e
$\beta =$ v/c of the incident particle
$\gamma =$ $1/\sqrt{1-\beta^2}$
δ: density correction
C: shell correction
W_{max}: maximum energy transfer in a single collision.

Figure 8: *Taken from Leo*

12.9 Scintillation

- What is the function of a scintillator? What is a typical band structure? In which 3 types scintillation materials are used? How large a typical scintillation decay times?

- What is the matrix? What is its function in the scintillator?
- What is a wavelength shifter? What is it benefit?

- Organic scintillators
  Scintillation light in these compounds arises from transitions made by the free valence electrons of the molecules and occupy what are known as the π-molekular orbitals. A typical energy diagram for this

12.10 PM

- Make a scetch of the typical PM and name its parts. For what is the HV used? Which physical processes occur in the PM?
- How large are the typical DC gain of common PM? How does external influences effect the gain of the PM?
- Which misuse leads to reduction of the life time of the PM, to the reduction of the S/N ratio or to the destruction of the PM? *Exposure to too much light.*

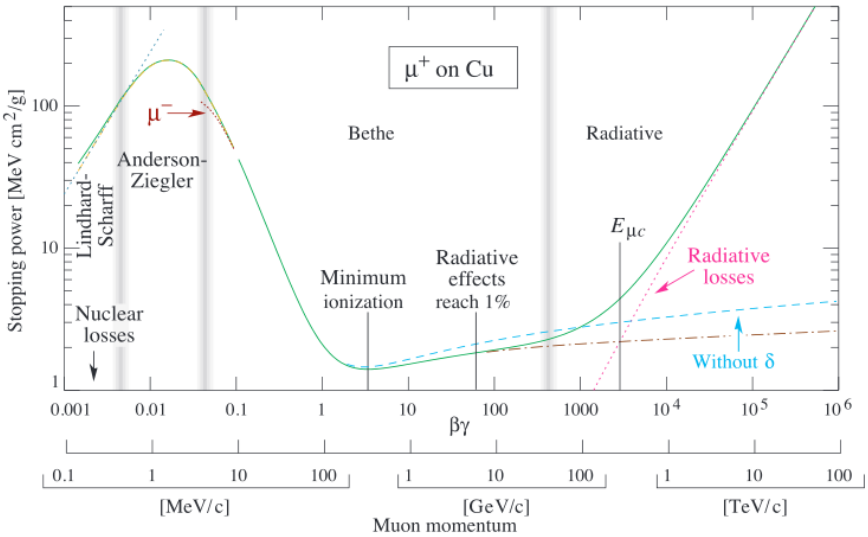

Fig. 32.1: Stopping power ($= \langle -dE/dx \rangle$) for positive muons in copper as a function of $\beta\gamma = p/Mc$ over nine orders of magnitude in momentum (12 orders of magnitude in kinetic energy). Solid curves indicate the total stopping power. Data below the break at $\beta\gamma \approx 0.1$ are taken from ICRU 49 [4], and data at higher energies are from Ref. 5. Vertical bands indicate boundaries between different approximations discussed in the text. The short dotted lines labeled "μ^-" illustrate the "Barkas effect," the dependence of stopping power on projectile charge at very low energies [6].

Figure 9: *Taken from PDG*

Overvoltage

12.11 Electronic questions for the experiment

1. Signal cable
   Determine the velocity of a pulse in a 50 S cable using an oscilloscope. Which properties of the cable causing the velocity in such a cable? Which influence has the dispersion? Which influence has the damping? Can you measure both influences on the cable lengths used here? Where are the differences between BNC and Lemo cables?

2. Linear amplifier
   In which range can the gain of the linear amplifier be adjusted? How large is the (gain dependent) DC offset?

3. Discriminators
   What is a discriminator level? Determine the adjustable range using testpulses with different heights. In which range can the width of the pulses be adjusted? What is the shape and height of the output pulses? Two discriminator channels with the same level have the same signal shape and width as input but different signal heights. What is the timing behavior of the output signals?

4. Attenuation
   How is dB defined? Which attenuation in voltage can be reached with 20dB, 10dB or 6dB? How large is the real attenuation in the experiment?

5. coincidences
   How does the coincidence react to logical input signals which are shifted in time? When is the output signal created in respect to the input signal? What is the minimal time, two signals have

to overlap to be counted as coincidence? Keeping this in mind: how have the input signals to be adjusted? How does the different signals of the coincidence units look like?

6. Gate Delay Generator
   How long does the Gate Delay Generator waits till sending the output signal? In which range can you adjust the delay and pulse width?
7. Timing unit
   How long does it take from the input signal to the output signal? In which range can the pulse width be varied? What limits the precision of the adjustment of the pulse width. What effect has the "update' button? How differentiate the different timing units in respect to this?
8. Linear Gate What is the function of a linear gate? How does the signal looks like in respect to the input signal and gate signal? Which influence has the setting of the pedestal? What happens by pushing the button pedestal? For what can it be used?
9. Shaping amplifier
   What does shaping mean in this context? How can you recognize the over modulation of the amplifier or the operation in the linear range? What function does the attenuation have before or within an amplifier? Which shape have unipolar or bipolar signals? Which information will be lost, if you use a amplifier with a free adjustable gain factor?

13 Literature

Staatsexamensarbeiten

- ANDRE TRÄRIS: *Simulation und Vorversuche zur Messung des Betaspektrums nach dem Myonzerfall*

References

[1] W.R. Leo: Techniques for Nuclear and Partilce Physics Experiments, Springer-Verlag, 1994

[2] C. Patrignani et al. (Particle Data Group), Chin. Phys. C, 40, 100001 (2016)