$$\frac{DG}{Dt} = 0$$

And $$\frac{DG}{Dt} = \frac{\partial G}{\partial t} + (\vec{u} - S_u \vec{n}) \cdot \nabla G$$

$$\Rightarrow \quad \frac{\partial G}{\partial t} + (\vec{u} - S_u \vec{n}) \cdot \nabla G = 0$$

$$\Rightarrow \quad \frac{\partial G}{\partial t} + \vec{u} \cdot \nabla G = S_u |\nabla \vec{G}| \qquad (\text{G-equation})$$

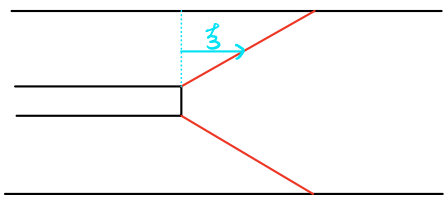

Suppose that $\quad G(x, r, t) = x - \xi(r, t)$

Subtitude into G-equation

$$\Rightarrow \quad -\frac{\partial \xi}{\partial t} + u \frac{\partial G}{\partial x} + v \frac{\partial G}{\partial r} = S_u \sqrt{\left(\frac{\partial G}{\partial x}\right)^2 + \left(\frac{\partial G}{\partial r}\right)^2}$$

$$\Rightarrow \quad -\frac{\partial \xi}{\partial t} + u - v \frac{\partial \xi}{\partial r} = S_u \sqrt{1 + \left(\frac{\partial \xi}{\partial r}\right)^2}$$

Assumption : The density change cross the flame front is negligible.

$\vec{u} = (u_G, 0)$

$$\Rightarrow \quad \boxed{\frac{\partial \xi}{\partial t} = u_G - S_u \sqrt{1 + \left(\frac{\partial \xi}{\partial r}\right)^2}} \qquad ①$$

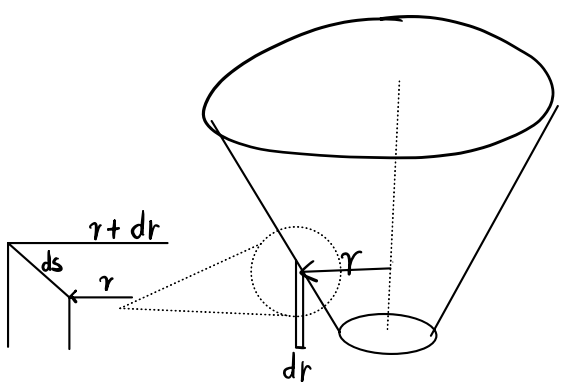

$$dA = 2\pi r \cdot ds = 2\pi r \sqrt{1+\left(\frac{\partial \xi}{\partial r}\right)^2}$$

$$\Rightarrow \boxed{A(t) = \int_a^b 2\pi r \sqrt{1+\left(\frac{\partial \xi}{\partial r}\right)^2}\, dr} \quad ②$$

Consider the linear perturbation.

Suppose that

$$\boxed{\begin{aligned} u_G(t) &= \bar{u}_G + \mathrm{Re}\left(\hat{u}_G e^{i\omega t}\right) \\ \xi(r,t) &= \bar{\xi}(r) + \mathrm{Re}\left(\hat{\xi}(r) e^{i\omega t}\right) \end{aligned}} \quad ③$$

Assumption : the flame is attached at the flame holder.

i.e. Boundary condition : $\xi(a,t) = 0 \Rightarrow \bar{\xi}(a) = 0,\ \hat{\xi}(a) = 0$

Subtitude Eq. ③ into Eq. ①

$$\Rightarrow \quad i\omega \hat{\xi} e^{i\omega t} = \bar{u}_G + \hat{u}_G e^{i\omega t} - S_u \sqrt{1+\left(\frac{\partial \bar{\xi}}{\partial r} + \frac{\partial \hat{\xi}}{\partial r} e^{i\omega t}\right)^2}$$

$$f(x'+\bar{x}) = f(\bar{x}) + x' f'(\bar{x}) + O\left[(x')^2\right]$$

$$\left(1+\left(\frac{\partial \bar{\xi}}{\partial r} + \frac{\partial \hat{\xi}}{\partial r} e^{i\omega t}\right)^2\right)^{\frac{1}{2}} = \left[1+\left(\frac{\partial \bar{\xi}}{\partial r}\right)^2\right]^{1/2} + \frac{\partial \hat{\xi}}{\partial r} e^{i\omega t} \cdot \frac{\partial \bar{\xi}}{\partial r}\left[1+\left(\frac{\partial \bar{\xi}}{\partial r}\right)^2\right]^{-1/2} + O(\varepsilon^2)$$

$$= \left[1+\left(\frac{\partial \bar{\xi}}{\partial r}\right)^2\right]^{1/2} + \frac{\partial \hat{\xi}}{\partial r}\frac{\partial \bar{\xi}}{\partial r}\left[1+\left(\frac{\partial \bar{\xi}}{\partial r}\right)^2\right]^{-1/2} e^{i\omega t} + O(\varepsilon^2)$$

$$i\omega \hat{\xi} e^{i\omega t} = \bar{u}_G + \hat{u}_G e^{i\omega t} - S_u\left[1+\left(\frac{\partial \bar{\xi}}{\partial r}\right)^2\right]^{1/2} - S_u \frac{\partial \hat{\xi}}{\partial r}\frac{\partial \bar{\xi}}{\partial r}\left[1+\left(\frac{\partial \bar{\xi}}{\partial r}\right)^2\right]^{-1/2} e^{i\omega t}$$

(Reduced equation)

$$\Rightarrow \text{Steady equation:} \quad \boxed{\bar{u}_G - S_u\left[1+\left(\frac{\partial \bar{\xi}}{\partial r}\right)^2\right]^{1/2} = 0} \Rightarrow \boxed{\bar{\xi} = \frac{r-a}{S_u}\sqrt{\bar{u}_G^2 - S_u^2}}$$

Complex amplitude govern equation:

$$i\omega \hat{\xi} = \hat{u}_G - S_u \frac{\partial \hat{\xi}}{\partial r} \frac{\partial \bar{\xi}}{\partial r} \left[1 + \left(\frac{\partial \bar{\xi}}{\partial r} \right)^2 \right]^{-1/2}$$

$$\downarrow$$

$$i\omega \hat{\xi} = \hat{u}_G - S_u \frac{\partial \hat{\xi}}{\partial r} \frac{\sqrt{\bar{u}_G^2 - S_u^2}}{S_u} \frac{S_u}{\bar{u}_G}$$

$$\downarrow$$

$$i\omega \hat{\xi} = \hat{u}_G - S_u \sqrt{1 - \left(\frac{S_u}{\bar{u}_G} \right)^2} \frac{\partial \hat{\xi}}{\partial r}$$

$$\Rightarrow \quad \frac{\partial \hat{\xi}}{\partial r} + i\omega \frac{S_u}{\bar{u}_G} \left(\bar{u}_G^2 - S_u^2 \right)^{-1/2} \hat{\xi} - \frac{\hat{u}_G S_u}{\bar{u}_G} \left(\bar{u}_G^2 - S_u^2 \right)^{-1/2} = 0$$

$$\downarrow$$

$$e^{-\int P(x)dx} \left(\int Q(x) e^{\int P(x) dx} dx + C \right)$$

Here, $P(r)$, $Q(r)$ are independent of r

$$e^{-Pr} \left(Q e^{Pr} r + C \right)$$

Boundary condition: $\hat{\xi}(a) = 0 \Rightarrow Qa + Ce^{-Pa} = 0$

$$\Rightarrow C = -Qae^{Pa}$$

$$\hat{\xi}(r) = \frac{\hat{u}_G S_u}{\bar{u}_G} \left(\bar{u}_G^2 - S_u^2 \right)^{-1/2} r - \frac{\hat{u}_G S_u}{\bar{u}_G} \left(\bar{u}_G^2 - S_u^2 \right)^{-1/2} a e^{-(r-a) i\omega \frac{S_u}{\bar{u}_G} \left(\bar{u}_G^2 - S_u^2 \right)^{-1/2}}$$

$$= \frac{\hat{u}_G S_u}{\bar{u}_G} \left(\bar{u}_G^2 - S_u^2 \right)^{-1/2} \left[r - a e^{-(r-a) i\omega \frac{S_u}{\bar{u}_G} \left(\bar{u}_G^2 - S_u^2 \right)^{-1/2}} \right]$$

$$i\omega \hat{\xi} = \hat{u}_G - \frac{S_u}{\bar{u}_G}\sqrt{\bar{u}_G^2 - S_u^2}\,\frac{\partial \hat{\xi}}{\partial r}$$

$$\Rightarrow \quad (i\omega \hat{\xi} - \hat{u}_G)\,dr + \frac{S_u}{\bar{u}_G}\sqrt{\bar{u}_G^2 - S_u^2}\,d\hat{\xi} = 0$$

$$dM = P\,dr + Q\,d\hat{\xi} = 0$$

$$= \frac{\partial M}{\partial r}dr + \frac{\partial M}{\partial \hat{\xi}}$$

Verify this equation appropriate equation:

$$\frac{\partial P}{\partial \hat{\xi}} = i\omega \neq \frac{\partial Q}{\partial r} = 0$$

Construct a non-zero, continuous and derivable function $\mu(r, \hat{\xi})$ such that

$$P\mu\,dr + Q\mu\,d\hat{\xi} = 0$$

$$\Rightarrow \quad \frac{\partial (P\mu)}{\partial \hat{\xi}} = \frac{\partial (Q\mu)}{\partial r}$$

$$\Rightarrow \quad \frac{\partial P}{\partial \hat{\xi}}\mu + P\frac{\partial \mu}{\partial \hat{\xi}} = \frac{\partial Q}{\partial r}\mu + Q\frac{\partial \mu}{\partial r}$$

$$\Rightarrow \quad \frac{\partial P}{\partial \hat{\xi}} - \frac{\partial Q}{\partial r} = \frac{1}{\mu}\left(Q\frac{\partial \mu}{\partial r} - P\frac{\partial \mu}{\partial \hat{\xi}}\right)$$

Suppose that μ is only depend on r (resonable!)

$$\Rightarrow \quad \frac{\partial P}{\partial \hat{\xi}} - \frac{\partial Q}{\partial r} = \frac{1}{\mu}Q\frac{\partial \mu}{\partial r}$$

$$\Rightarrow \quad \frac{\partial \mu}{\partial r} + \frac{\frac{\partial Q}{\partial r} - \frac{\partial P}{\partial \hat{\zeta}}}{Q} \mu = 0$$

$$\Rightarrow \quad \frac{\partial \mu}{\partial r} - \frac{i\omega}{\frac{S_u}{\bar{u}_G}\sqrt{\bar{u}_G^2 - S_u^2}} \mu = 0$$

$$\Rightarrow$$

$$\mu = \exp\left\{ \frac{i\omega r}{\frac{S_u}{\bar{u}_G}\sqrt{\bar{u}_G^2 - S_u^2}} \right\}$$

Hence, $P\mu\, dr + Q\mu\, d\hat{\zeta} = 0$ is appropriate equation

$$\Rightarrow \quad M = \int Q\mu\, d\hat{\zeta} = \int \frac{S_u}{\bar{u}_G}\sqrt{\bar{u}_G^2 - S_u^2} \exp\left\{ \frac{i\omega r}{\frac{S_u}{\bar{u}_G}\sqrt{\bar{u}_G^2 - S_u^2}} \right\} d\hat{\zeta}$$

$$= \frac{S_u}{\bar{u}_G}\sqrt{\bar{u}_G^2 - S_u^2} \exp\left\{ \frac{i\omega r}{\frac{S_u}{\bar{u}_G}\sqrt{\bar{u}_G^2 - S_u^2}} \right\} \hat{\zeta} + f(r)$$

$$\Rightarrow \quad \frac{\partial M}{\partial r} = i\omega \exp\left\{ \frac{i\omega r}{\frac{S_u}{\bar{u}_G}\sqrt{\bar{u}_G^2 - S_u^2}} \right\} \hat{\zeta} + f'(r) = (i\omega\hat{\zeta} - \hat{u}_G) \exp\left\{ \frac{i\omega r}{\frac{S_u}{\bar{u}_G}\sqrt{\bar{u}_G^2 - S_u^2}} \right\}$$

$$\Rightarrow \quad f'(r) = -\hat{u}_G \exp\left\{ \frac{i\omega r}{\frac{S_u}{\bar{u}_G}\sqrt{\bar{u}_G^2 - S_u^2}} \right\}$$

$$\Rightarrow \quad f(r) = -\frac{\frac{S_u}{\bar{u}_G}\sqrt{\bar{u}_G^2 - S_u^2}}{i\omega} \hat{u}_G \exp\left\{ \frac{i\omega r}{\frac{S_u}{\bar{u}_G}\sqrt{\bar{u}_G^2 - S_u^2}} \right\} + C$$

$$\Rightarrow \quad \frac{S_u}{\bar{u}_G}\sqrt{\bar{u}_G^2 - S_u^2} \exp\left\{ \frac{i\omega r}{\frac{S_u}{\bar{u}_G}\sqrt{\bar{u}_G^2 - S_u^2}} \right\} \hat{\zeta}$$

$$- \frac{\frac{S_u}{\bar{u}_G}\sqrt{\bar{u}_G^2 - S_u^2}}{i\omega} \hat{u}_G \exp\left\{ \frac{i\omega r}{\frac{S_u}{\bar{u}_G}\sqrt{\bar{u}_G^2 - S_u^2}} \right\} + C = 0$$

Boundary condition : $\hat{\zeta}(a) = 0$

$$\downarrow$$

$$C = \frac{\frac{S_u}{\bar{u}_G}\sqrt{\bar{u}_G^2 - S_u^2}}{i\omega}\,\hat{u}_G \exp\left\{\frac{i\omega a}{\frac{S_u}{\bar{u}_G}\sqrt{\bar{u}_G^2 - S_u^2}}\right\}$$

$$\Rightarrow \quad \frac{S_u}{\bar{u}_G}\sqrt{\bar{u}_G^2 - S_u^2}\,\exp\left\{\frac{i\omega r}{\frac{S_u}{\bar{u}_G}\sqrt{\bar{u}_G^2 - S_u^2}}\right\}\hat{\zeta}$$

$$+ \frac{\frac{S_u}{\bar{u}_G}\sqrt{\bar{u}_G^2 - S_u^2}}{i\omega}\,\hat{u}_G\left[\exp\left\{\frac{i\omega a}{\frac{S_u}{\bar{u}_G}\sqrt{\bar{u}_G^2 - S_u^2}}\right\} - \exp\left\{\frac{i\omega r}{\frac{S_u}{\bar{u}_G}\sqrt{\bar{u}_G^2 - S_u^2}}\right\}\right] = 0$$

$$\downarrow \qquad \frac{S_u}{\bar{u}_G}\sqrt{\bar{u}_G^2 - S_u^2}\,\exp\left\{\frac{i\omega r}{\frac{S_u}{\bar{u}_G}\sqrt{\bar{u}_G^2 - S_u^2}}\right\} \neq 0$$

$$\hat{\zeta} + \frac{\hat{u}_G}{i\omega}\left\{\exp\left\{i\omega(a-r)\frac{\bar{u}_G}{S_u}(\bar{u}_G^2 - S_u^2)^{-1/2}\right\} - 1\right\} = 0$$

$$\Rightarrow \boxed{\begin{aligned}\hat{\zeta} &= \frac{\hat{u}_G}{i\omega}\left\{1 - \exp\left\{-i\omega(r-a)\frac{\bar{u}_G}{S_u}(\bar{u}_G^2 - S_u^2)^{-1/2}\right\}\right\} \\ &= \frac{\hat{u}_G}{i\omega}\left\{1 - \exp\left\{-i\omega(r-a)\Big/\left(S_u\sqrt{1-\left(\frac{S_u}{\bar{u}_G}\right)^2}\right)\right\}\right\}\end{aligned}}$$

The flame front Aera.

$$\boxed{A(t) = \int_a^b 2\pi r \sqrt{1 + \left(\frac{\partial \xi}{\partial r}\right)^2}\, dr}$$

$$\xi = \bar{\xi}(r) + \hat{\xi}(r) e^{i\omega t}$$

$$A(t) = \int_a^b 2\pi r \sqrt{1 + \left[\frac{\partial \bar{\xi}(r)}{\partial r} + \frac{\partial \hat{\xi}(r)}{\partial r} e^{i\omega t}\right]^2}\, dr$$

$$= \int_a^b 2\pi r \left(\sqrt{1 + \left(\frac{\partial \bar{\xi}}{\partial r}\right)^2} + \frac{\partial \hat{\xi}}{\partial r} e^{i\omega t} \frac{\frac{\partial \bar{\xi}}{\partial r}}{\sqrt{1 + \left(\frac{\partial \bar{\xi}}{\partial r}\right)^2}} + O(\varepsilon^2) \right) dr$$

$$\approx \int_a^b 2\pi r \sqrt{1 + \left(\frac{\partial \bar{\xi}}{\partial r}\right)^2}\, dr + \int_a^b 2\pi r \frac{\partial \hat{\xi}}{\partial r} \frac{\partial \bar{\xi}}{\partial r} \frac{e^{i\omega t}}{\sqrt{1 + \left(\frac{\partial \bar{\xi}}{\partial r}\right)^2}}\, dr$$

$$\Rightarrow \boxed{\begin{aligned} \bar{A} &= \int_a^b 2\pi r \sqrt{1 + \left(\frac{\partial \bar{\xi}}{\partial r}\right)^2}\, dr \\ &= \int_a^b 2\pi r \frac{\bar{u}_G}{S_u}\, dr = \frac{\pi \bar{u}_G}{S_u}(b^2 - a^2) \end{aligned}}$$

$$\hat{A} = \int_a^b 2\pi r \frac{\partial \hat{\xi}}{\partial r} \frac{\partial \bar{\xi}}{\partial r} \frac{1}{\sqrt{1 + \left(\frac{\partial \bar{\xi}}{\partial r}\right)^2}}\, dr$$

$$= \int_a^b 2\pi r \frac{\partial \hat{\xi}}{\partial r} \frac{\sqrt{\bar{u}_G^2 - S_u^2}}{S_u} \frac{S_u}{\bar{u}_G}\, dr$$

$$= \pi \sqrt{1 - \left(\frac{S_u}{\bar{u}_G}\right)^2} \int_a^b 2r \frac{\partial \hat{\xi}}{\partial r}\, dr$$

$$= \pi \sqrt{1 - \left(\frac{S_u}{\bar{u}_G}\right)^2} \left[2r \hat{\xi} \Big|_a^b - 2\int_a^b \hat{\xi}\, dr \right]$$

$$= \pi \sqrt{1-\left(\frac{S_u}{\bar{u}_G}\right)^2}\left[2b\,\hat{\xi}(b) - 2\int_a^b \hat{\xi}(r)\,dr\right]$$

where $$\hat{\xi}(b) = \frac{\hat{u}_G}{i\omega}\left[1 - \exp\left\{-i\frac{\omega}{S_u\sqrt{1-\left(\frac{S_u}{\bar{u}_G}\right)^2}}(b-a)\right\}\right]$$

$$\int_a^b \hat{\xi}(r)\,dr = \frac{\hat{u}_G}{i\omega}\left[r + \frac{S_u\sqrt{1-\left(\frac{S_u}{\bar{u}_G}\right)^2}}{i\omega}\exp\left\{-i\frac{\omega}{S_u\sqrt{1-\left(\frac{S_u}{\bar{u}_G}\right)^2}}(r-a)\right\}\right]\Bigg|_a^b$$

$$= \frac{\hat{u}_G}{i\omega}\left[(b-a) + \frac{S_u\sqrt{1-\left(\frac{S_u}{\bar{u}_G}\right)^2}}{i\omega}\left[\exp\left\{-i\frac{\omega}{S_u\sqrt{1-\left(\frac{S_u}{\bar{u}_G}\right)^2}}(b-a)\right\} - 1\right]\right]$$

Let $$\Omega = \frac{\omega(b-a)}{S_u\sqrt{1-\left(\frac{S_u}{\bar{u}_G}\right)^2}}$$

$$\Rightarrow \quad \hat{\xi}(b) = \frac{\hat{u}_G}{i\omega}\left(1 - e^{-i\Omega}\right)$$

$$\int_a^b \hat{\xi}(r)\,dr = \frac{\hat{u}_G}{i\omega}\left[(b-a) + \frac{(b-a)}{i\Omega}\left(e^{-i\Omega} - 1\right)\right]$$

$$\Rightarrow \quad \hat{A} = \pi\sqrt{1-\left(\frac{S_u}{\bar{u}_G}\right)^2}\left[2b\,\frac{\hat{u}_G}{i\omega}\left(1 - e^{-i\Omega}\right) - \frac{2\hat{u}_G}{i\omega}(b-a)\left[1 + \frac{1}{i\Omega}\left(e^{-i\Omega} - 1\right)\right]\right]$$

$$= \pi\sqrt{1-\left(\frac{S_u}{\bar{u}_G}\right)^2}\cdot\frac{2\hat{u}_G}{i\omega}\left(a - be^{-i\Omega} + \frac{b-a}{i\Omega}\left(1 - e^{-i\Omega}\right)\right)$$

$$= \hat{u}_G\, 2\pi(b-a)\,\frac{1}{S_u}\,\frac{S_u\sqrt{1-\left(\frac{S_u}{\bar{u}_G}\right)^2}}{i\omega(b-a)}\left(a - be^{-i\Omega} + \frac{b-a}{i\Omega}\left(1 - e^{-i\Omega}\right)\right)$$

$$= \hat{u}_G \frac{2\pi(b-a)}{i\Omega S_u} \left[a - be^{-i\Omega} + \frac{b-a}{i\Omega}\left(1-e^{-i\Omega}\right) \right]$$

$$\Rightarrow \frac{\hat{q}_G}{\bar{q}_G} = \frac{\hat{A}}{\bar{A}} = \frac{\hat{u}_G \frac{2\pi(b-a)}{i\Omega S_u} \left[a - be^{-i\Omega} + \frac{b-a}{i\Omega}\left(1-e^{-i\Omega}\right) \right]}{\frac{\pi \bar{u}_G}{S_u}(b^2-a^2)}$$

$$= \frac{\hat{u}_G}{\bar{u}_G} \left(\frac{2}{b+a} \right) \frac{1}{i\Omega} \left[a - be^{-i\Omega} + \frac{b-a}{i\Omega}\left(1-e^{-i\Omega}\right) \right]$$

$$= \frac{\hat{u}_G}{\bar{u}_G} f(\Omega)$$

$$\Rightarrow \boxed{FTF = f(\Omega) = \frac{2}{i\Omega(b+a)} \left[a - be^{-i\Omega} + \frac{b-a}{i\Omega}\left(1-e^{-i\Omega}\right) \right]}$$

Suppose that, when Ω is small, $f(\Omega)$ has the form as shown as

$$f(\Omega) \approx \frac{1}{1 + i\Omega\tau_1 + (i\Omega)^2\tau_2}$$

Proof.

$$f(\Omega) = \frac{2}{i\Omega(b+a)} \left[a - be^{-i\Omega} + \frac{b-a}{i\Omega}\left(1-e^{-i\Omega}\right) \right]$$

$$= \frac{2}{i\Omega(b+a)} \left[\frac{(a-be^{-i\Omega})i\Omega + (b-a)(1-e^{-i\Omega})}{i\Omega} \right]$$

$$= \frac{-2}{\dfrac{(b+a)\Omega^2}{(a-be^{-i\Omega})i\Omega + (b-a)(1-e^{-i\Omega})}}$$

$$= \frac{1}{-\frac{1}{2}\dfrac{(b+a)\Omega^2}{(a-be^{-i\Omega})i\Omega + (b-a)(1-e^{-i\Omega})}}$$

$$\approx \frac{1}{1 + i\Omega\tau_1 + (i\Omega)^2\tau_2}$$

which indicate that

$$(i\Omega)^2 f(i\Omega) = 1 + (i\Omega)\tau_1 + (i\Omega)^2\tau_2$$

where $f(i\Omega) = \frac{1}{2}\dfrac{(b+a)}{(a-be^{-i\Omega})i\Omega + (b-a)(1-e^{-i\Omega})}$

$$\Rightarrow \quad f(i\Omega) = \frac{1}{2}\frac{(b+a)}{(a-be^{-i\Omega})i\Omega + (b-a)(1-e^{-i\Omega})} = \frac{1}{(i\Omega)^2} + \frac{1}{i\Omega}\tau_1 + \tau_2$$

Therefore, we just need to prove that

$$\lim_{\Omega\to 0} f(i\Omega) = \lim_{\Omega\to 0}\left[\frac{1}{(i\Omega)^2} + \frac{1}{i\Omega}\tau_1 + \tau_2\right]$$

To prove this limitation, we are suppose to divide into three parts.

① $\lim_{\Omega\to 0} (i\Omega)^2 f(i\Omega) = 1$

② $\lim_{\Omega\to 0} i\Omega\left[f(i\Omega) - \frac{1}{(i\Omega)^2}\right] = \tau_1$

③ $\lim_{\Omega\to 0}\left[f(i\Omega) - \frac{1}{(i\Omega)^2} - \frac{\tau_1}{i\Omega}\right] = \tau_2$

Proof. ①

$$\lim_{\Omega\to 0} (i\Omega)^2 f(i\Omega) = \lim_{\Omega\to 0} -\frac{1}{2}\frac{(b+a)\Omega^2}{(a-be^{-i\Omega})i\Omega + (b-a)(1-e^{-i\Omega})}$$

$$e^x = 1 + x + \frac{1}{2}x^2 + \frac{1}{6}x^3 + \cdots$$

$$1 - i\Omega - \frac{1}{2}\Omega^2$$

$$= \lim_{\Omega\to 0} -\frac{1}{2}\frac{(b+a)\Omega^2}{(a-b(1-i\Omega+o(\Omega^2))i\Omega + (b-a)(i\Omega + \frac{1}{2}\Omega^2 + o(\Omega^3))}$$

$$= \lim_{\Omega\to 0} -\frac{1}{2}\frac{(b+a)\Omega^2}{(a-b)i\Omega - \Omega^2 b + (b-a)i\Omega + \frac{b-a}{2}\Omega^2 + O(\Omega^3)}$$

$$= \lim_{\Omega\to 0} -\frac{1}{2}\frac{(b+a)\Omega^2}{-\frac{(a+b)}{2}\Omega^2 + O(\Omega^3)}$$

$$= 1$$

$$e^{-i\Omega} = 1 - i\Omega + \frac{1}{2}(i\Omega)^2 - \frac{1}{6}(i\Omega)^3 + \frac{1}{24}(i\Omega)^4 + O(\Omega^5)$$

Proof. ②

$$\lim_{\Omega\to 0} i\Omega\left[f(i\Omega) - \frac{1}{(i\Omega)^2}\right]$$

$$= \lim_{\Omega\to 0} i\Omega\left[\frac{1}{2}\frac{(b+a)}{(a-be^{-i\Omega})i\Omega + (b-a)(1-e^{-i\Omega})} - \frac{1}{(i\Omega)^2}\right]$$

$$= \lim_{\Omega\to 0}\left[\frac{1}{2}\frac{(b+a)i\Omega}{(a-be^{-i\Omega})i\Omega + (b-a)(1-e^{-i\Omega})} - \frac{1}{i\Omega}\right]$$

Here, must be expand to $O(\Omega^4)$

$$= \lim_{\Omega\to 0}\left[\frac{(b+a)(i\Omega)^2 - 2(a-be^{-i\Omega})(i\Omega) - 2(b-a)(1-e^{-i\Omega})}{2(a-be^{-i\Omega})(i\Omega)^2 + 2(b-a)(1-e^{-i\Omega})(i\Omega)}\right]$$

$$= \lim_{\Omega\to 0}\left[\frac{(b+a)(i\Omega)^2 - 2\left(\frac{a+b}{2}(i\Omega)^2 - \frac{(a+2b)}{6}(i\Omega)^3 + O(\Omega^4)\right)}{a+b\,(i\Omega)^3 + O(\Omega^4)}\right]$$

$$= \lim_{\Omega \to 0} \frac{\frac{1}{3}(a+2b)(i\Omega)^3 + O(\Omega^4)}{(a+b)(i\Omega)^3 + O(\Omega^4)}$$

$$= \frac{(a+2b)}{3(a+b)}$$

$$\Longrightarrow \quad \tau_1 = \frac{a+2b}{3(a+b)}$$

Proof. ③

$$\lim_{\Omega \to 0} \left[f(i\Omega) - \frac{1}{(i\Omega)^2} - \frac{\tau_1}{i\Omega} \right]$$

$$= \lim_{\Omega \to 0} \left[\frac{1}{2} \frac{(b+a)}{(a-be^{-i\Omega})i\Omega + (b-a)(1-e^{-i\Omega})} - \frac{1}{(i\Omega)^2} - \frac{\tau_1}{i\Omega} \right]$$

$$= \lim_{\Omega \to 0} \frac{1}{2} \left[\frac{(b+a)(i\Omega)^2 - 2(1+\tau_1(i\Omega))\left[(a-be^{-i\Omega})i\Omega + (b-a)(1-e^{-i\Omega})\right]}{(a-be^{-i\Omega})(i\Omega)^3 + (b-a)(1-e^{-i\Omega})(i\Omega)^2} \right]$$

need $O(\Omega^5)$

$$(a-be^{-i\Omega})i\Omega = (a-b)i\Omega + b(i\Omega)^2 - \frac{b}{2}(i\Omega)^3 + \frac{b}{6}(i\Omega)^4 + O(\Omega^5)$$

$$\Rightarrow \tau_1(i\Omega)(a-be^{-i\Omega})i\Omega = \tau_1(a-b)i\Omega^2 + b\tau_1(i\Omega)^3 - \frac{b\tau_1}{2}(i\Omega)^4 + O(\Omega^5)$$

$$(b-a)(1-e^{-i\Omega}) = (b-a)i\Omega - \frac{b-a}{2}(i\Omega)^2 + \frac{b-a}{6}(i\Omega)^3 - \frac{b-a}{24}(i\Omega)^4 + O(\Omega^5)$$

$$\Rightarrow \tau_1(i\Omega)(b-a)(1-e^{-i\Omega}) = \tau_1(b-a)(i\Omega)^2 - \frac{\tau_1(b-a)}{2}(i\Omega)^3 + \frac{\tau_1(b-a)}{6}(i\Omega)^4 + O(\Omega^5)$$

$$\Downarrow$$

subtitude $\tau_1 \Rightarrow 0$

$$-2(1+\tau_1(i\Omega))\left[(a-be^{-i\Omega})i\Omega + (b-a)(1-e^{-i\Omega})\right]$$

$$= -2\left(\frac{a+b}{2}(i\Omega)^2 + \left(-\frac{(a+2b)}{6} + \frac{(a+b)\tau_1}{2} \right)(i\Omega)^3 \right.$$

$$+\left(\frac{a+3b}{24}-\frac{(a+2b)\tau_1}{6}\right)(i\Omega)^4+O(\Omega^5)$$

$$=-(a+b)(i\Omega)^2-2\left(\frac{a+3b}{24}-\frac{(a+2b)\tau_1}{6}\right)(i\Omega)^4+O(\Omega^5)$$

And

$$(a-be^{-i\Omega})(i\Omega)^3+(b-a)(1-e^{-i\Omega})(i\Omega)^2$$

$$=(a-b)(i\Omega)^3+b(i\Omega)^4+(b-a)(i\Omega)^3-\frac{b-a}{2}(i\Omega)^4+O(\Omega^5)$$

$$=-\frac{a+b}{2}(i\Omega)^4+O(\Omega^5)$$

$$=\lim_{\Omega\to 0}\frac{1}{2}\,\frac{-2\left(\frac{a+3b}{24}-\frac{(a+2b)\tau_1}{6}\right)(i\Omega)^4+O(\Omega^5)}{-\frac{a+b}{2}(i\Omega)^4+O(\Omega^5)}$$

$$=\frac{\frac{(a+3b)-4(a+2b)\tau_1}{12}}{a+b}$$

$$=\frac{a+3b-4(a+2b)\frac{a+2b}{3(a+b)}}{12(a+b)}$$

$$=\frac{3(a+3b)(a+b)-4(a+2b)^2}{36(a+b)^2}$$

$$=-\frac{a^2+4ab+7b^2}{36(a+b)^2}\quad \underline{\underline{\text{Or}}}\quad -\tau_1^2\,\frac{a^2+4ab+7b^2}{4(a+2b)^2}$$

$$\Rightarrow \quad \tau_2 = -\tau_1^2 \frac{a^2+4ab+7b^2}{4(a+2b)^2}$$

Prove done.

Suppose that $\tau_2 = \tau_1 \tau_3 \quad \Rightarrow \quad \tau_3 = -\tau_1 \dfrac{a^2+4ab+7b^2}{4(a+2b)^2}$

$$\Rightarrow \quad f(\Omega) \approx \frac{1}{1 + i\Omega\tau_1 + (i\Omega)^2 \tau_1 \tau_3}$$

$\Rightarrow$ low pass filter !!!