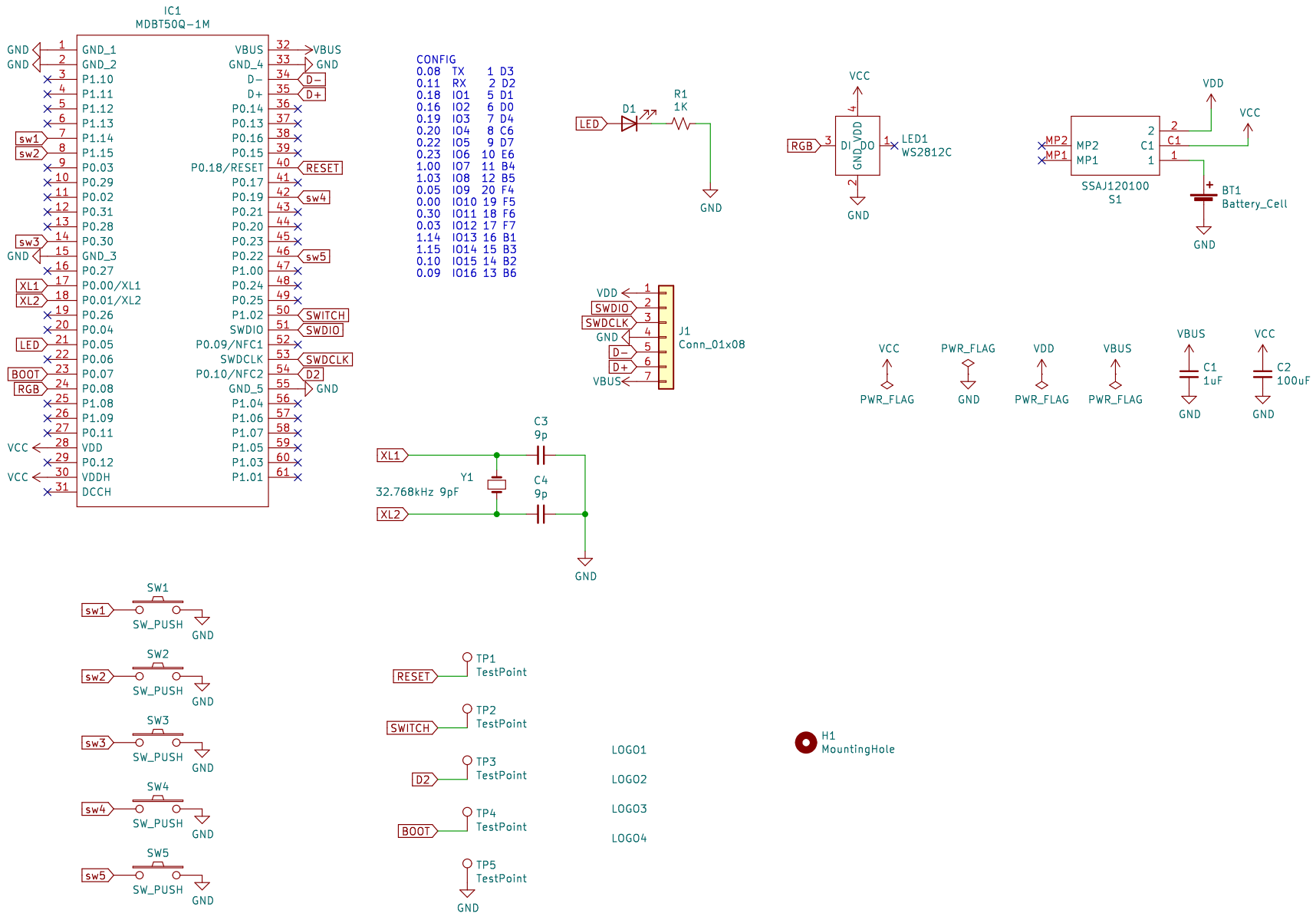
IC1
MDBT50Q-1M
GND_1 1
GND_2 2
P1.10 3
P1.11 4
P1.12 5
P1.13 6
P1.14 7
P1.15 8
P0.03 9
P0.29 10
P0.02 11
P0.31 12
P0.28 13
P0.30 14
GND_3 15
P0.27 16
P0.00/XL1 17
P0.01/XL2 18
P0.26 19
P0.04 20
P0.05 21
P0.06 22
P0.07 23
P0.08 24
P1.08 25
P1.09 26
P0.11 27
VDD 28
P0.12 29
VDDH 30
DCCH 31
VBUS 32
GND_4 33
D− 34
D+ 35
P0.14 36
P0.13 37
P0.16 38
P0.15 39
P0.18/RESET 40
P0.17 41
P0.19 42
P0.21 43
P0.20 44
P0.23 45
P0.22 46
P1.00 47
P0.24 48
P0.25 49
P1.02 50
SWDIO 51
P0.09/NFC1 52
SWDCLK 53
P0.10/NFC2 54
GND_5 55
P1.04 56
P1.06 57
P1.07 58
P1.05 59
P1.03 60
P1.01 61
CONFIG
0.08 TX 1 D3
0.11 RX 2 D2
0.18 IO1 5 D1
0.16 IO2 6 D0
0.19 IO3 7 D4
0.20 IO4 8 C6
0.22 IO5 9 D7
0.23 IO6 10 E6
1.00 IO7 11 B4
1.03 IO8 12 B5
0.05 IO9 20 F4
0.00 IO10 19 F5
0.30 IO11 18 F6
0.03 IO12 17 F7
1.14 IO13 16 B1
1.15 IO14 15 B3
0.10 IO15 14 B2
0.09 IO16 13 B6
LED
D1
R1
1K
GND
VCC
RGB
DI
DO
VDD
GND
LED1
WS2812C
MP2
MP1
SSAJ120100
S1
C1
BT1
Battery_Cell
J1
Conn_01x08
SWDIO
SWDCLK
PWR_FLAG
C1
1uF
C2
100uF
XL1
XL2
Y1
32.768kHz 9pF
C3
9p
C4
9p
SW1
SW2
SW3
SW4
SW5
SW_PUSH
sw1
sw2
sw3
sw4
sw5
RESET
SWITCH
D2
BOOT
TP1
TestPoint
TP2
TP3
TP4
TP5
LOGO1
LOGO2
LOGO3
LOGO4
H1
MountingHole