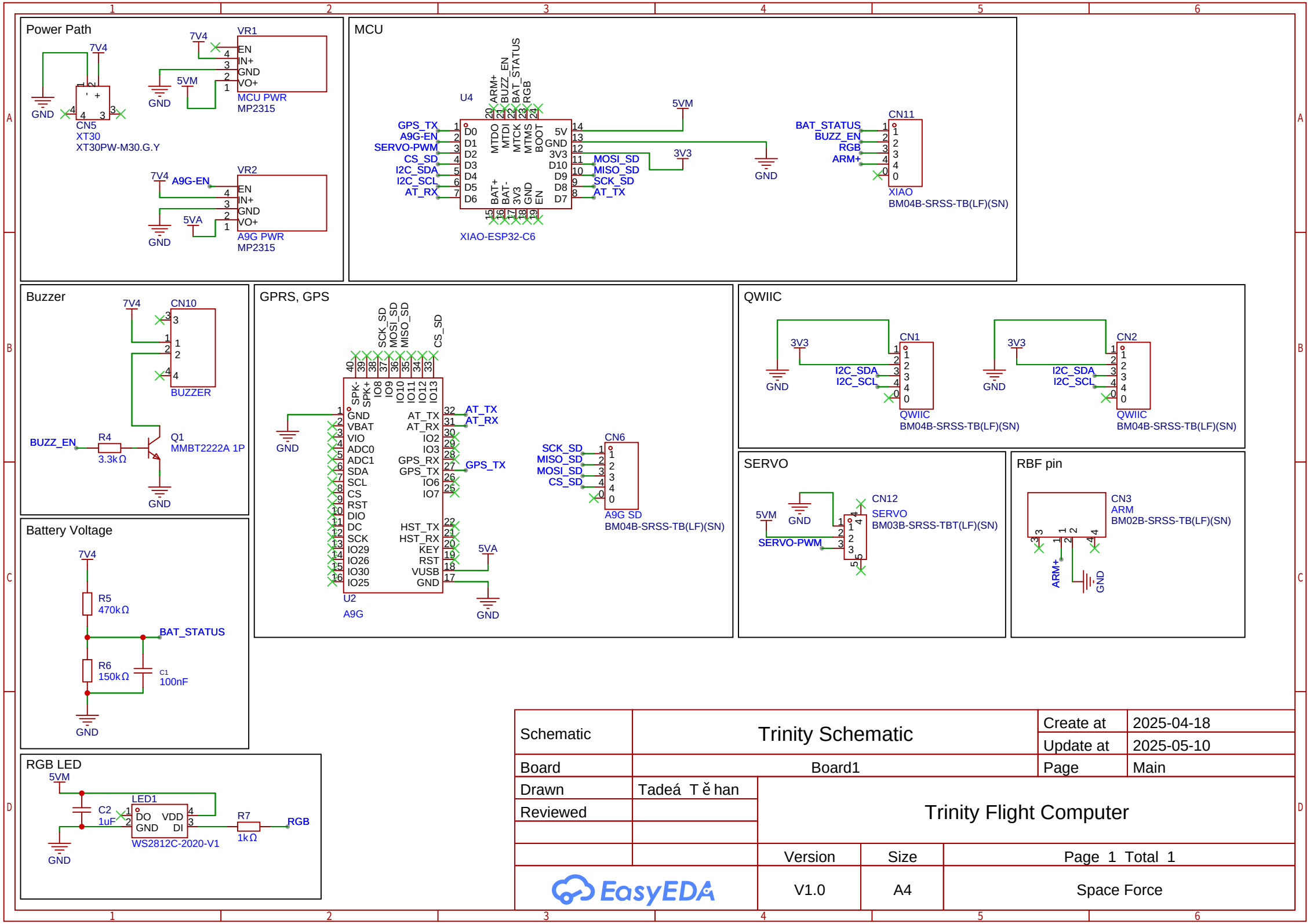
Power Path
7V4
GND
CN5
XT30
XT30PW-M30.G.Y
VR1
EN
IN+
GND
VO+
5VM
MCU PWR
MP2315
VR2
A9G-EN
5VA
A9G PWR
MP2315
MCU
U4
ARM+
BUZZ_EN
BAT_STATUS
RGB
GPS_TX
A9G-EN
SERVO-PWM
CS_SD
I2C_SDA
I2C_SCL
AT_RX
D0
D1
D2
D3
D4
D5
D6
MTDO
MTDI
MTCK
MTMS
BOOT
5V
GND
3V3
D10
D9
D8
D7
MOSI_SD
MISO_SD
SCK_SD
AT_TX
BAT+
BAT-
3V3
GND
EN
XIAO-ESP32-C6
CN11
XIAO
BM04B-SRSS-TB(LF)(SN)
Buzzer
CN10
BUZZER
BUZZ_EN
R4
3.3kΩ
Q1
MMBT2222A 1P
GPRS, GPS
SCK_SD
MOSI_SD
MISO_SD
CS_SD
SPK-
SPK+
IO8
IO9
IO10
IO11
IO12
IO13
GND
VBAT
VIO
ADC0
ADC1
SDA
SCL
CS
RST
DIO
DC
SCK
IO29
IO26
IO30
IO25
AT_TX
AT_RX
IO2
IO3
GPS_RX
GPS_TX
IO6
IO7
HST_TX
HST_RX
KEY
RST
VUSB
GND
U2
A9G
CN6
A9G SD
BM04B-SRSS-TB(LF)(SN)
QWIIC
CN1
CN2
BM04B-SRSS-TB(LF)(SN)
SERVO
CN12
SERVO
BM03B-SRSS-TBT(LF)(SN)
RBF pin
CN3
ARM
BM02B-SRSS-TB(LF)(SN)
Battery Voltage
R5
470kΩ
R6
150kΩ
C1
100nF
RGB LED
LED1
C2
1uF
DO
VDD
DI
WS2812C-2020-V1
R7
1kΩ
RGB
Schematic
Trinity Schematic
Create at
2025-04-18
Update at
2025-05-10
Board
Board1
Page
Main
Drawn
Tadeá T ě han
Reviewed
Trinity Flight Computer
Version
Size
Page 1 Total 1
EasyEDA
V1.0
A4
Space Force