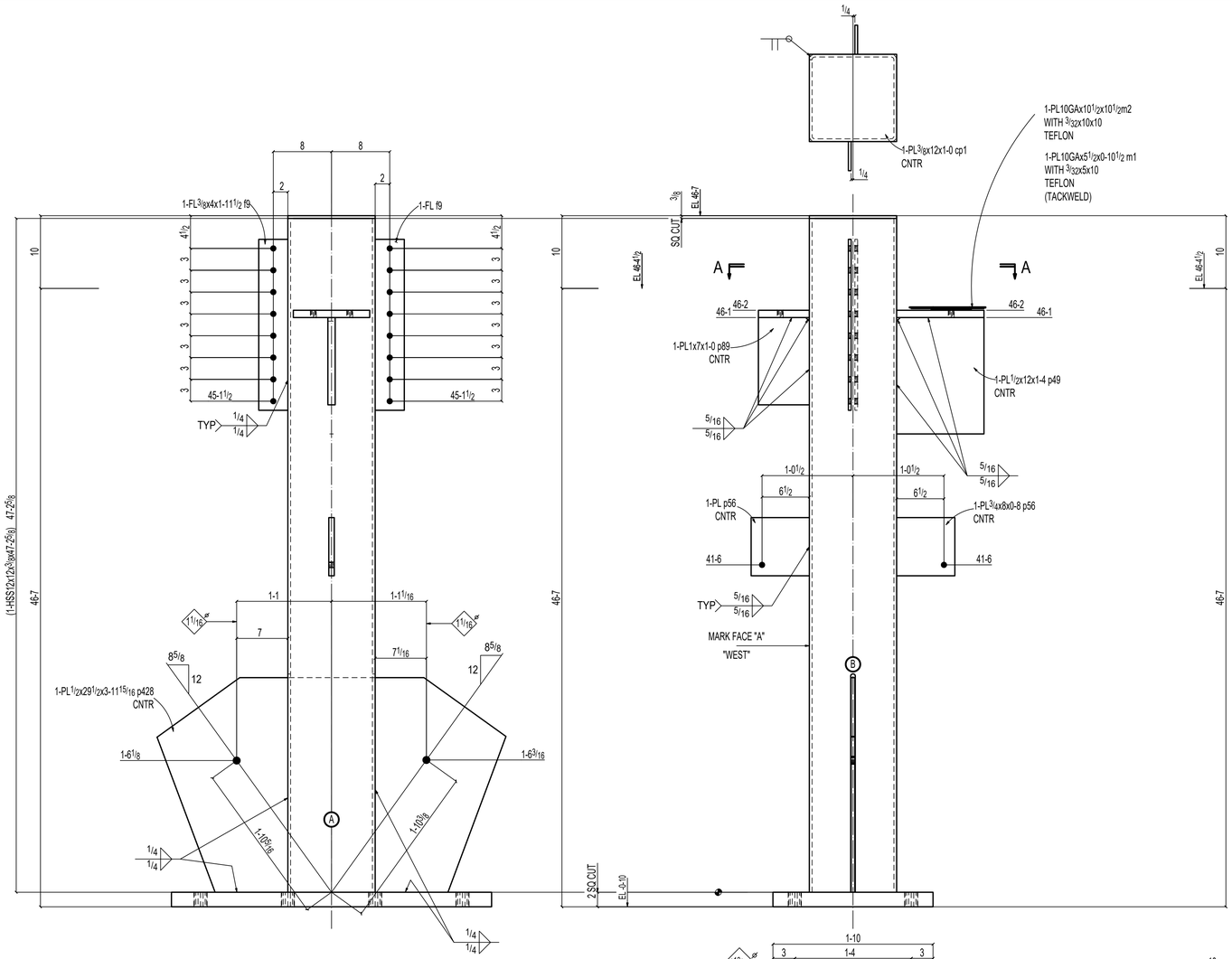

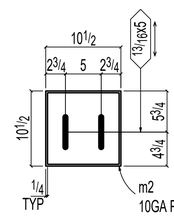

3/32" THK. TEFLON BONDED PLATE
W/10GA PLATE

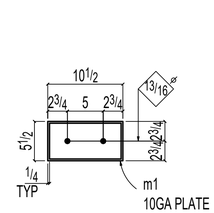

3/32" THK. TEFLON BONDED PLATE
W/10GA PLATE

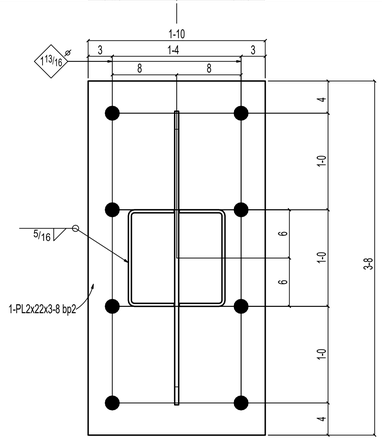

ONE COLUMN 39C1

AT GRID:
E & 8

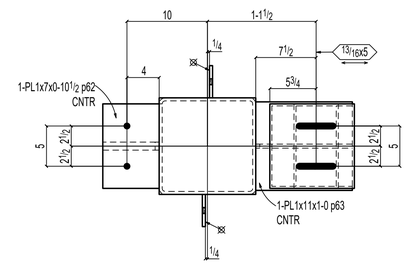

Section A-A
39C1

BILL OF MATERIAL

LINE #	QTY TOTAL	PC MARK	SHOP MARK	DESCRIPTION	LENGTH		WEIGHT UNIT	REMARKS	STEEL GRADE
	ONE	39C1		COLUMN			3667		
	1		39C1	HSS12x12x3/8	47	2 5/8	2741	S2E	A500B
	1		bp2	PL2x22	3	8	550		A36
	1		p63	PL1x11	1	0	38		A36
	1		p89	PL1x7	1	0	24		A36
	1		p62	PL1x7	0	10 1/2	21		A36
	2		p56	PL3/4x8	0	8	14		A36
	1		p428	PL 1/2x29 1/2	3	11 15/16	201		A36
	1		p49	PL 1/2x12	1	4	28		A36
	1		cp1	PL3/8x12	1	0	16		A36
	2		f9	FL3/8x4	1	11 1/2	10		A36
	1		m2	PL10GAx10 1/2	0	10 1/2	4		A36
	1		m1	PL10GAx5 1/2	0	10 1/2	3		A36
				FIELD BOLTS					
	2			3/4 Dia A325	0	3 1/4		+1HD WASH	
	2			3/4 Dia A325	0	2 3/4		+1HD WASH	

GENERAL NOTES:-

1) ALL MATERIAL SHALL BE ASTM A36 U.N.O. TUBE STEEL SHALL BE A500-B AND PIPE SHALL BE A53B U.N.O.
2) ALL WELDING ELECTRODES SHALL BE E70XX U.N.O.
3) DUPLICATION OF PIECEMARKS ALSO INDICATES DUPLICATION OF WELDS
4) ALL STEEL CLEANING SHALL BE SSPC-SP2(HAND TOOL) OR SSPC-SP3(POWER TOOL) U.N.O.
5) ALL MEMBERS ARE CENTERED ON EACH OTHER (U.N.O.)
6) COPE ALL RE-ENTRANT CORNERS 1/2" MIN NOTCH FREE
7) HOLES EDGE DISTANCE SHALL BE 1 1/2" U.N.O.
8) ALL TAIL DIMENSIONS ARE TO TOP OF BASE PLATE OR SQUARE(UNCUT) END OF BEAM
9) PLACE ALL SHIPPING MARKS ON LEFT END AND TOP OF PIECE AS DETAILED
10) ERECT ALL STEEL WITH SHIPPING MARK IN POSITION SHOWN IN ERECTION PLAN
11) WIDE FLANGE MATERIAL TO BE ASTM A992 (FY=50KSI)

ALL WELDS: E70XX, U.N.O. | OPEN HOLES ARE: 13/16 Ø U.N.O.

PAINT: 1-SC PRIMER (U.N.O.) | CLEANING : SP-2

FOR CONSTRUCTION

REV	REVISION DESCRIPTION	REV /BY	DATE	SHOP
A	ISSUED FOR APPROVAL	BMN	07-12-21	
0	ISSUED FOR CONSTRUCTION	BMN	08-10-21	

DWG'S FOR APRVL: 07-12-21 | DETAILED BY: BMN
DWG'S TO SHOP: | DATE: 07-01-21
DWG'S TO FIELD: | CHECKED BY: BNB
DATE: 07-01-21

GROGAN - HAZEL- STEEL, INC
10547 W LITTLE YORK RD.
HOUSTON TEXAS 77041
OFFICE(713)466-7501 FAX (713) 466-8921

CUSTOMER: ROSENBERGER CONSTRUCTION
PROJECT: PLUM CREEK BUILDING -3
LOCATION: KYLE,TX 78640
ARCH/ ENGR: STUDIO NORTH ARCHITECTS

PROJECT NO. #4244
SHEET NO: 39