A 6.75 mW + 12.45 dBm IIP3 1.76 dB NF 0.9 GHz CMOS LNA Employing Multiple Gated Transistors With Bulk-Bias Control

Tae Hwan Jin, *Student Member, IEEE*, and Tae Wook Kim, *Senior Member, IEEE*

***Abstract*—This letter presents a g''_{m}-cancellation range extension method with bulk-bias control that was applied to a Multiple Gated Transistors (MGTR) technique, which is a linearity enhancement technique for RF amplifiers. Instead of adjusting the gate-biasing voltage of the auxiliary transistor (AT) ($\mathrm{V_{shift}}$) in conventional g''_{m}-cancellation, we propose to use the bulk-biasing voltage, $\mathrm{V_{BS}}$, which allows for range extension of the g''_{m}-cancellation of AT. The proposed technique does not require any other additional biasing circuits and has the benefit of consuming less power. The proposed low noise amplifier (LNA) is implemented in 0.18 μm 1-poly-6-metal CMOS technology. Our results show that the LNA achieves a noise figure of 1.76 dB, a +12.45 dBm input third order intercept point (IIP3), and a 15 dB power gain at 0.9 GHz, with the core LNA consuming 4.5 mA from a 1.5 V power supply.**

***Index Terms*—g''_{m}-cancellation range extension, linearity, low-noise amplifier (LNA), transconductance non-linearity cancellation.**

I. Introduction

LINEARITY of RF amplifiers is important for wireless communication [1]–[4]. A few techniques have been suggested to improve linearity in RF circuits. A practical linearization IIP3 enhancement technique is the compensation of the third-order non-linearity (g''_{m}, the second derivative of transconductance) of transconductance [2]. For example, in [2]–[8] the Multiple Gated Transistors (MGTR) technique is introduced in order to eliminate the third order non-linearity of the transistor.

References [2]–[7] show that the MGTR circuits are composed of a main transistor (MT) and an auxiliary transistor (AT) that are separately controlled by each independent gate-biasing voltage. However, use of the gate-biasing MGTR technique results in a narrow g''_{m}-cancellation bias point range of AT. Therefore, it is difficult to identify the optimum g''_{m}-cancellation bias point of the AT [3]. If we control the bulk bias of the AT instead of controlling the gate bias, we are able to extend the range of the AT biasing point and thus can easily identify the optimum point of the AT bias as well as maintain a stable cancellation range despite variation in Process, Voltage, Temperature (PVT). Reference [8] introduces a mixer that combines the MGTR technique with bulk-biasing control of the AT. However, only the results of linearity improvement were shown, without an explanation of the effect of the g''_m-cancellation range of the AT. Reference [9] uses bulk-biasing for optimum biasing point of IIP3 but optimum biasing point technique is very sensitive to PVT variation.

In this letter, we propose the bulk bias control of the AT as part of the MGTR technique. We also demonstrate that bulk bias control extends the g''_m-cancellation range of the AT, with results showing that the g''_m-cancellation range of the MGTR LNA with AT-bulk bias ($\mathrm{V_{BS}}$) control is at least four times wider than that with the AT-gate bias ($\mathrm{V_{shift}}$) control. A CMOS MGTR LNA with AT-bulk biasing technique is designed and measured for a 900 MHz Code Division Multiple Access (CDMA) application. The linearity improvement can be a maximum of 11.45 dB with a 0.4 V window of AT-bulk biasing voltage, where the IIP3 is preserved over +8 dBm of the requirement value for the CDMA application. The technique also consumes less power when compared to the AT-off LNA at $\mathrm{V_{BS}} = 0\ \mathrm{V}$.

An analysis of the effect of the biasing voltage on g''_m is shown in Section II. The fabrication and measurement results are described in Section III, which is followed by the conclusions in Section IV.

II. The Effect of the Bulk Voltage on g''_m

Most of the third order intermodulation distortion (IMD3) in the common source LNA (CS LNA) originates from g''_m, and the amplitude of the input tone at the third order intercept point ($AIP3$) is given as follows [4]:

$$AIP3 = \sqrt{\frac{4}{3}\left|\frac{g_m}{g''_m/6}\right|}. \tag{1}$$

As shown in (1), the $AIP3$ is effectively enhanced by reducing g''_m. Fig. 1 shows a schematic of the proposed CS LNA. With the MGTR technique, the composite g''_m is close to zero ($g''_m \approx 0$) when the positive peak of the AT's g''_m is aligned with the negative peak of g''_m of the MT by controlling the transistor size and the biasing voltages [6]. The role of C_{add} in the MGTR LNA is that this extra gate-source capacitance desensitizes the induced-gate noise and the second-order distortion contribution to the IMD3 [3].

The output drain current of the CS LNA in the saturation region can be expressed as follows [10]:

$$I_{ds} = \frac{\mu_0 C_{ox}}{2n}\frac{W}{L}\frac{X}{1+\alpha X}(1+\lambda V_{ds}) \tag{2}$$

Manuscript received May 24, 2011; revised August 16, 2011; accepted August 20, 2011. Date of publication October 06, 2011; date of current version November 09, 2011. This work was supported by the Basic Science Research program through the NRF of Korea funded by the MEST (2011-0003356) and by IDEC.

The authors are with School of Electrical and Electronic Engineering, Yonsei University, Seoul, Korea (e-mail: taewook.kim@yonsei.ac.kr).

Color versions of one or more of the figures in this letter are available online at http://ieeexplore.ieee.org.

Digital Object Identifier 10.1109/LMWC.2011.2167503

1531-1309/$26.00 © 2011 IEEE

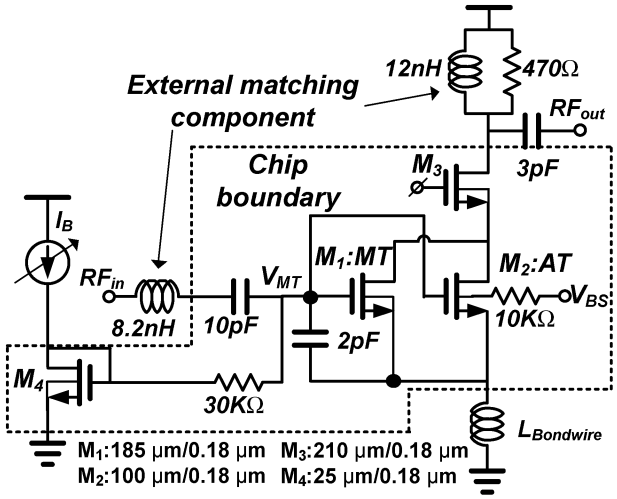

Fig. 1. Schematic of the proposed LNA.

where

$$\alpha = \theta + \frac{\mu_0}{2nu_{sat}L}. \tag{3}$$

$$X = 2n\phi_t \ln\left(1 + e^{\frac{V_{GS}-V_{th}}{2n\phi_t}}\right). \tag{4}$$

μ_0 is the carrier mobility factor, C_{ox} is the gate-oxide capacitance per unit area, λ is the channel-length modulation factor, θ is the mobility-degradation coefficient, v_{sat} is the saturation velocity, and W and L are the channel-width and length, respectively. The parameter n is the subthreshold swing parameter and ϕ_t is the thermal voltage. The threshold voltage V_{th} can be expressed by (5), as follows:

$$V_{th} = V_{th0} + \gamma(\sqrt{\phi_s - V_{BS}} - \sqrt{\phi_s}) \tag{5}$$

where V_{th0} is the zero-bias threshold voltage, $\mathrm{V_{BS}}$ is the bulk-source voltage, γ is the body effect coefficient, and ϕ_s is the surface potential parameter.

As observed in (2)–(5), the drain current and its derivatives $(g_m, g'_m, g''_m, \cdots)$ are determined by the gate-source voltage $(\mathrm{V_{GS}})$ or the bulk-source voltage $(\mathrm{V_{BS}})$. $\mathrm{V_{GS}}$ is more influential upon the drain current and its derivatives than $\mathrm{V_{BS}}$ because the effect of $\mathrm{V_{BS}}$ is scaled by the square root and by γ, which is typically 0.5. Therefore, the drain current and its derivatives are more precisely controlled by $\mathrm{V_{BS}}$ than by $\mathrm{V_{GS}}$.

The schematics of the gate-biasing and bulk-biasing MGTR are shown in Fig. 2(a). For the gate-biasing MGTR technique, $\mathrm{V_{AT}} = \mathrm{V_{MT}} + \mathrm{V_{shift}}$. In the bulk-biasing MGTR, the gates of MT and AT are connected to each other so that they share the same gate voltage. The threshold voltage of AT is controlled by $\mathrm{V_{BS}}$. Fig. 2(b) shows third-order nonlinearity of the transconductance for MT and AT versus the gate-biasing voltage, $\mathrm{V_{GS}}$. The illustration shows that the two curvatures of g''_m of the ATs with the two different biasing techniques are identical when a specific AT gate-biasing voltage, $\mathrm{V_{shift}}$, corresponds to a AT bulk-biasing voltage, $\mathrm{V_{BS}}$. Here, the values of g''_m of the AT at $-0.1/-0.175/-0.25$ $\mathrm{V_{shift}}$ are equal to the values of g''_m of the AT at $-0.4/-0.8/-1.3$ $\mathrm{V_{BS}}$. Despite the identical curvatures of g''_m, the corresponding range of $\mathrm{V_{BS}}$ is about six times wider than that of $\mathrm{V_{shift}}$. Thus, g''_m can be minutely controlled by the bulk-biasing technique, which allows us to easily discover the optimum point of AT bias as well as to maintain a stable cancellation range over a PVT variation.

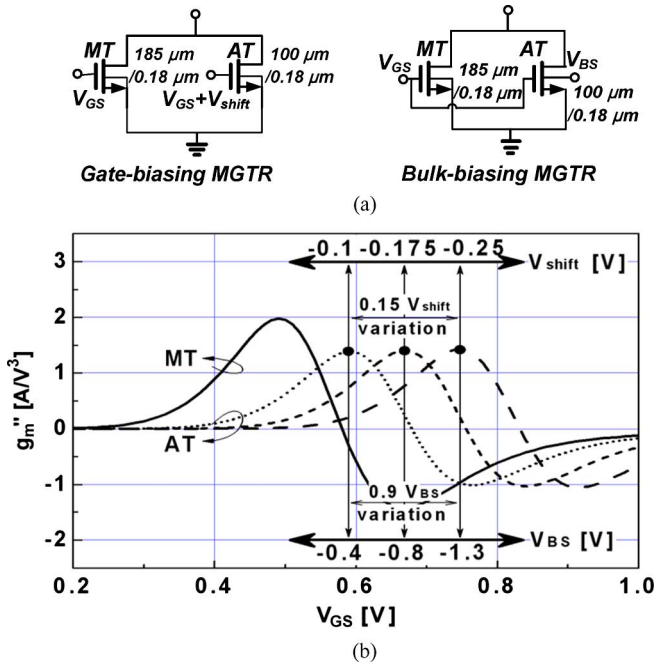

Fig. 2. (a) Schematics of the gate-biasing and the bulk-biasing MGTR techniques and (b) the comparison of two g''_m-variations with the gate-biasing and the bulk-biasing MGTR techniques.

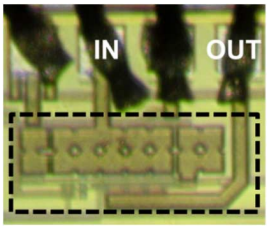

Fig. 3. Chip microphotograph of the LNA.

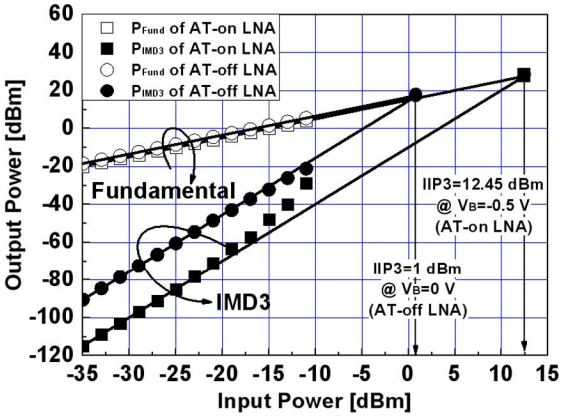

Fig. 4. Comparison of the measured IIP3 results between AT-on LNA and AT-off LNA at 0.9 GHz.

III. Fabrication and Measurement Results

The proposed LNA is implemented in a 0.18 μm 1-poly-6-metal CMOS technology for a 900 MHz CDMA application.

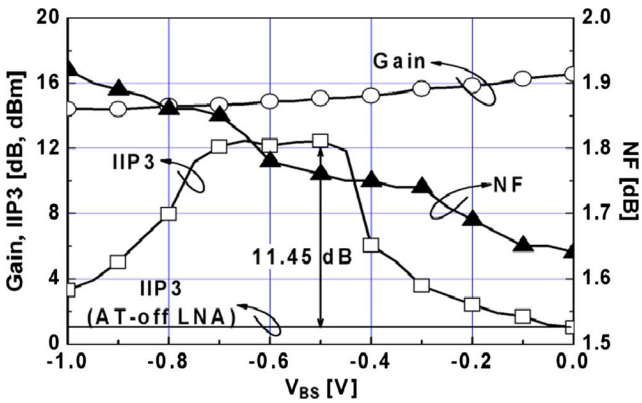

Fig. 5. Measurement results of IIP3, Gain and NF vs. the AT bulk-bias at 0.9 GHz.

TABLE I
MEASUREMENT SUMMARY AND COMPARISONS WITH PREVIOUS WORKS

Work	Tech.	Freq [GHz]	IIP3 [dBm]	Gain [dB]	NF [dB]	P_{dc} [mW]	F.O.M
This work	**0.18μm CMOS**	**0.9**	**12.45**	**15**	**1.76**	**6.75**	**164.8**
AT-off LNA	0.18μm CMOS	0.9	1	16.6	1.64	9.4	13.3
'10 TMTT [3]	0.18μm CMOS	0.9	9.4	14.9	1.8	5.55	94
'08 JSSC [7]	0.13μm CMOS	0.8 -2.1	16	14.5	2.6	14.5	79
'08 MWCL [11]	0.13μm CMOS	2.14	-5.3	16.6	1.97	7.5	3
'09 ISSCC [12]	0.18μm CMOS	0.3 -0.92	-3.2	21	2	3.6	29
'08 JSSC [13]	0.13μm CMOS	5	-10	20	2.1	3.8	4

Fig. 3 shows a microphotograph of the LNA with a chip size of $320 \times 150\ \mu\mathrm{m}^2$, excluding pads.

Fig. 4 shows the IIP3 measurement results of the LNA with the AT-off $(\mathrm{V_{BS}} = 0\ \mathrm{V})$ and the LNA with the AT-on $(\mathrm{V_{BS}} = -0.5\ \mathrm{V})$. The results are measured by a two-tone test of 899 and 900 MHz input frequencies. The AT-on LNA shows an IIP3 of $+12.45$ dBm while the AT-off LNA shows an IIP3 of $+1$ dBm. The linearity (IIP3), gain, and noise figure (NF) performances according to AT-biasing voltage are shown in Fig. 5. As the bulk biasing voltage, $\mathrm{V_{BS}}$, decreases, the AT's operation mode shifts from a strong inversion region to a weak inversion region. While gain and noise performances are slightly degraded as g_m decreases, the IIP3 does not noticeably increase until the value of g_m'' is close to zero, where the AT-biasing voltage, $\mathrm{V_{BS}}$, is between about -0.4 V and -0.8 V and the IIP3 is over $+8$ dBm, which meets the requirements for the CDMA application [4]. The g_m''-cancellation range is almost 0.4 V, which is at least four times wider than that of the LNAs in [3] and [4]. This means that the IIP3 becomes so insensitive to the voltage variations that, in practice, the optimum biasing condition for the linearity improvement is easily achieved. The IIP3, gain, and NF at $\mathrm{V_{BS}} = -0.5$ V are $+12.45$ dBm, 15 dB, and 1.76 dB, respectively.

The performance measurement results of the AT-on LNA and the AT-off LNA, and the comparisons with recently published state-of-the-art LNAs are summarized in Table I. The power consumption of AT-off LNA is higher than that of the AT-on LNA since the bulk-biasing voltage, $\mathrm{V_{BS}}$, of the AT-off LNA is zero, which makes its AT operate in a strong inversion region. However, the AT of the AT-on LNA operates in a weak inversion region. Thus, AT-off LNA has higher g_m which leads slightly better NF and Gain. Figure of merit $(F.O.M)$ is defined as the following equation where the output third order intercept point $(OIP3)$ is the output-referred IP3, and $\mathrm{P_{dc}}$ is the power consumption. Our result shows the highest F.O.M.

$$F.O.M. = \frac{OIP3(mW)}{(NF-1)P_{dc}(mW)}. \tag{6}$$

IV. CONCLUSION

The MGTR CS LNA with bulk-bias control technique is proposed in order to extend the AT's control range. Due to the bulk-biasing control, the LNA shows an AT bias control range that is nearly four times wider than conventional gate-bias control MGTR LNAs. The measurement results show that the LNA achieves a 1.76 dB NF, $+12.45$ dBm IIP3, and a 15 dB power gain, with the core LNA consuming 4.5 mA from a 1.5 V power supply.

REFERENCES

[1] I. Nam, B. Kim, and K. Lee, "CMOS RF amplifier and mixer circuits utilizing complementary Characteristics of parallel combined NMOS and PMOS devices," *IEEE Trans. Microw. Theory Tech.*, vol. 53, no. 5, pp. 1662–1671, May 2005.

[2] T. S. Kim, S. K. Kim, J. S. Park, and B. S. Kim, "Post-linearization of differential CMOS low noise amplifier using cross-coupled FETs," *J. Semicond. Tech. Sci.*, vol. 8, no. 4, pp. 283–287, Dec. 2008.

[3] T. H. Jin and T. W. Kim, "A 5.5-mW +9.4-dBm IIP3 1.8-dB NF CMOS LNA employing multiple gated transistors with capacitance desensitization," *IEEE Trans. Microw. Theory Tech.*, vol. 58, no. 10, pp. 2529–2537, Oct. 2010.

[4] V. Aparin and L. E. Larson, "Modified derivative superposition method for linearizing FET low-noise amplifiers," *IEEE Trans. Microw. Theory Tech.*, vol. 53, no. 2, pp. 571–581, Feb. 2005.

[5] T. W. Kim, "A common-gate amplifier with transconductance nonlinearity cancellation and its high-frequency analysis using the volterra series," *IEEE Trans. Microw. Theory Tech.*, vol. 57, no. 6, pp. 1461–1469, Jun. 2009.

[6] T. Kim, B. Kim, and K. Lee, "Highly linear receiver front-end adopting MOSFET transconductance linearization by multiple gated transistors," *IEEE J. Solid-State Circuits*, vol. 39, no. 1, pp. 223–229, Jan. 2004.

[7] W. H. Chen, G. Liu, B. Zdravko, and A. M. Niknejad, "A highly linear broadband CMOS LNA employing noise and distortion cancellation," *IEEE J. Solid-State Circuits*, vol. 43, no. 5, pp. 1164–1176, May 2008.

[8] K. H. Liang, C. H. Lin, H. Y. Chang, and Y. J. Chan, "A new linearization technique for CMOS RF Mixer using third-order transconductance cancellation," *IEEE Microw. Wireless Compon. Lett.*, vol. 18, no. 5, pp. 350–352, May 2008.

[9] A. Mabrouki, T. Taris, Y. Deval, and J. B. Begueret, "CMOS low-noise amplifier linearization through body biasing," in *Proc. IEEE Int. Symp. RFIT (RFIT'09)*, Singapore, Dec. 9–11, 2009, pp. 150–153.

[10] M. T. Terrovitis and R. G. Meyer, "Intermodulation distortion in current-commutating CMOS mixers," *IEEE J. Solid-State Circuits*, vol. 35, no. 10, pp. 1461–1473, Oct. 2000.

[11] H. Song, H. Kim, K. Han, J. Choi, C. Park, and B. Kim, "A Sub-2 dB NF dual-band CMOS LNA for CDMA/WCDMA applications," *IEEE Microw. Wireless Compon. Lett.*, vol. 18, no. 3, pp. 212–214, Mar. 2008.

[12] S. Woo, W. Kim, C. H. Lee, K. Lim, and J. Laskar, "A 3.6 mW differential common-gate CMOS LNA with positive-negative feedback," in *Proc. IEEE Int. Solid-State Circuits Conf.*, Feb. 2009, pp. 218–220.

[13] J. Borremans, P. Wambacq, C. Soens, Y. Rolain, and M. Kuijk, "Low-area active-feedback low-noise amplifier design in scaled digital CMOS," *IEEE J. Solid-State Circuits*, vol. 43, no. 11, pp. 2422–2433, Nov. 2008.