INTERNATIONAL JOURNAL OF CIRCUIT THEORY AND APPLICATIONS
Int. J. Circ. Theor. Appl. (2015)
Published online in Wiley Online Library (wileyonlinelibrary.com). DOI: 10.1002/cta.2059

A 0.7-dB NF, +8.2-dBm IIP3 CMOS low noise amplifier using frequency selective feedback

Tae Hwan Jin, Hong Gul Han and Tae Wook Kim*,†

School of Electrical and Electronic Engineering, Yonsei University, 50 Yonsei-ro, Seodaemun-gu, Seoul 120-749, Republic of Korea

SUMMARY

A CMOS amplifier employing the frequency selective feedback technique using a shunt feedback capacitor is designed and measured. The proposed amplifier can achieve a high *IIP3* (input referred third-order intercept point) by reducing the third- and second-order nonlinearity contributions to the IMD3 (third-order intermodulation distortion), which is accomplished using a capacitor as the frequency selective element. Also, the shunt feedback capacitor improves the noise performance of the amplifier. By applying the technique to a cascode LNA using 0.18-μm CMOS technology, we obtain the NF of 0.7 dB, an *IIP3* of +8.2 dBm, and a gain of 15.1 dB at 14.4 mW of power consumption at 900 MHz. Copyright © 2015 John Wiley & Sons, Ltd.

Received 27 October 2014; Revised 27 November 2014; Accepted 11 December 2014

KEY WORDS: low noise amplifier; third-order input intercept point; harmonic feedback; frequency selective feedback; linearity

1. INTRODUCTION

In the near future, we will see an all-digital radio that can operate in a software-defined manner with advanced modern circuit design technology. Even in the software radio, the LNA together with an analog-to-digital converter (ADC) will continue to be one of the key analog blocks for the radio. This is because all circuit blocks except for the LNA and ADC will be replaced with digital circuitry [1]. All design parameters in the LNA, such as the NF, gain, and linearity, will remain the same important parameters in the digital radio. Low NF in the LNA relaxes the ADC SNR burden, while a high linearity relaxes the linearity burden of the sampler. Also, high linearity in the LNA is required for some test specification, such as single tone desensitization. For example, the cross modulation in the code division multiple access (CDMA) receiver demands over +8-dBm *IIP3* for the LNA. Thus, the importance of LNA linearity will remain the same in the age of the digital radio [2, 3].

There have been many approaches to increase the linearity of the amplifier, and most of these works can be categorized into two approaches: one is based on feedback, and the other is based on cancellation. Feedback can correct the nonlinear active element using the linear feedback at the price of gain reduction [4]. In a low-frequency region, large loop gain can linearize the entire circuit effectively; however, in a high-frequency region, it is difficult to achieve that goal due to insufficient loop gain. If the loop gain is not high enough, the second-order harmonic feedback limits an improvement in linearity. This issue will be discussed in Section 2.

The linearity improvement technique using cancellation usually cancels transconductance nonlinearity using an auxiliary device [3,5–8]. The main amplifier's second derivative of the

*Correspondence to: Tae Wook Kim, School of Electrical & Electronic Engineering Yonsei University, 50 Yonsei-ro, Seodaemun-gu, Seoul 120-749, Republic of Korea.
†E-mail: taewook.kim@yonsei.ac.kr

Copyright © 2015 John Wiley & Sons, Ltd.

transconductor (g_m''), which is a major contributor to the third-order nonlinearity, is cancelled with that of the auxiliary device.

In a high-frequency region, however, the technique is limited by the feedback of the sub-harmonic frequency ($\Delta\omega$) and the second harmonic frequency (2ω). In order to overcome the harmonic feedback effects, many circuit techniques have been proposed [3,8]. In principle, the cancellation technique suffers from mismatch and PVT (process, voltage, and temperature) variations, which cause performance degradation. Also, the cancellation techniques that use a weak inversion transistor for the auxiliary transistor suffer from a noise penalty [3]. The transistor operating in weak inversion region has higher flicker noise than a transistor operating in saturation region, so NF is increased by around 0.6 dB with the auxiliary transistor operating in weak inversion region in the cancellation technique [9]. Thus, if we can achieve high linearity without using cancellation, it allows us to have a more robust and lower noise design.

In this paper, we attempt to improve the *IIP3* in a high-frequency region using a frequency selective feedback. The frequency selective feedback is implemented as shown in Figure 1.

In this paper, we apply the Volterra series analysis on the technique applied to the CMOS technology and provide a high-frequency linearity analysis as well as a design insight that discusses how the frequency selective feedback improves the *IIP3* without disturbing other performances. With the proposed technique, we obtain a 900-MHz CDMA LNA that has an NF of 0.7 dB, an *IIP3* of 8.2 dBm, and a gain of 15.1 dB at a 14.4-mW power consumption using 0.18-μm CMOS technology.

The paper is organized as follows. The linearity analysis in a high-frequency region using the Volterra series is presented in Section 2, and noise analysis is provided in Section 3. In Section 4, the design and measurement results are shown, followed by the conclusion in Section 5.

2. LINEARITY ANALYSIS

2.1. Low-frequency analysis of the feedback effect on distortion

A feedback system can be modeled as shown in Figure 2, where A is the open loop amplifier, f is the feedback factor, S_i is the input signal, S_o is the output signal, and S_e is the signal difference between the feedback signal ($f\ S_o$) and S_i. When the open loop amplifier has the following input and output relationship,

$$S_o = a_1 S_e + a_2 S_e^2 + a_3 S_e^3 + \cdots, \tag{1}$$

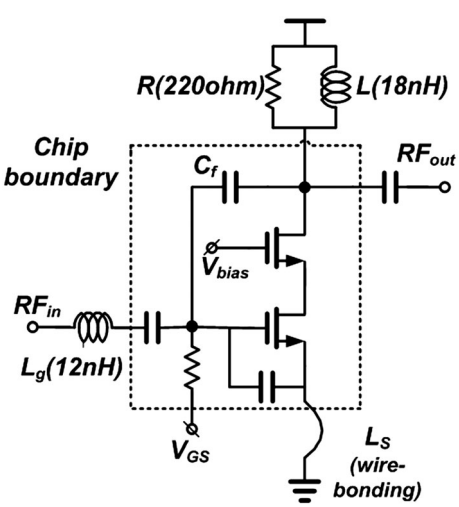

Figure 1. Schematic diagram of the proposed amplifier.

Copyright © 2015 John Wiley & Sons, Ltd.

DOI: 10.1002/cta

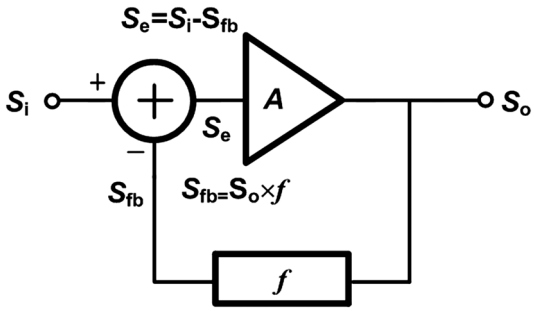

Figure 2. The block diagram of a feedback system.

$$S_e = S_i - f\,S_o, \tag{2}$$

and the overall feedback system has the following relationship,

$$S_o = b_1 S_i + b_2 S_i^2 + b_3 S_i^3 + \cdots, \tag{3}$$

$$b_1 = \frac{a_1}{1+T},\ T = a_1 f \tag{4}$$

$$b_2 = \frac{a_2}{(1+T)^3} \tag{5}$$

$$b_3 = \frac{a_3(1+T) - 2a_2^2 f}{(1+T)^5} \tag{6}$$

then *AIP3* (the intercept point of the third-order inter-modulation distortion) of the feedback system ($AIP3_{closed\ loop}$) and that of the open loop ($AIP3_{open\ loop}$) can be expressed with the following equations [10, 11]:

$$AIP3_{closed\ loop} = \sqrt{\frac{4}{3}\left|\frac{b_1}{b_3}\right|} = \sqrt{\frac{4}{3}\left|\frac{a_1}{\left(a_3 - \frac{2a_2^2 f}{1+T}\right)\frac{1}{(1+T)^3}}\right|} \tag{7}$$

$$AIP3_{open\ loop} = \sqrt{\frac{4}{3}\left|\frac{a_1}{a_3}\right|}. \tag{8}$$

In (7), we see that the feedback introduces interaction between the second and the third harmonic distortions, yet we can obtain high linearity with high feedback loop gain (T). For example, when we have a high enough loop gain, the relationship between the *AIP3* and the gain of the open loop and those of the closed loop can be expressed with the following equations [12]:

$$AIP3_{closed\ loop} \approx AIP3_{open\ loop} + 1.5(T)\ (dB) \tag{9}$$

$$Gain_{closed\ loop} \approx Gain_{open\ loop} - (T)\ (dB) \tag{10}$$

when

$$T \gg \frac{2a_2^2 f}{a_3} - 1 \tag{11}$$

If we increase the loop gain (T), the gain of the closed loop ($Gain_{closed\ loop}$) will drop by the ratio of $1 \times T$ dB, but the *AIP3* of the closed loop ($AIP3_{closed\ loop}$) will increase by $1.5 \times T$ dB. Therefore, the feedback has a benefit on the linearity when we compare the gain reduction versus the linearity improvement. However, in a high-frequency region, it is difficult to obtain a high loop gain. Hence,

Copyright © 2015 John Wiley & Sons, Ltd.

DOI: 10.1002/cta

if we want to enjoy the benefit of feedback in a high-frequency region, it is required to reduce the second-order interaction with the feedback. In a high-frequency region, the second-order interaction is usually related to the harmonic feedback components, such as the frequency components at 2ω and $\Delta\omega$ [3,9]. Thus, if we can provide frequency selective characteristics in the feedback network, we can reduce the second-order contribution to the third-order nonlinearity. The Volterra series analysis in the following section can provide insight on the issue.

2.2. *High-frequency analysis on the frequency selective feedback*

The contribution of the second-order interaction to the IMD3 (third-order intermodulation distortion) through feedback can be explained in the procedure shown in Figure 3 [3]. The input two-tone signal generates the second harmonic frequency, 2ω ($\omega_2+\omega_1$, $2\omega_2$, $2\omega_1$) and the sub-harmonic frequency, $\Delta\omega$ ($\omega_2-\omega_1$, $\omega_1-\omega_2$), components at the output through the second-order distortion of the open loop amplifier. The generated second-order harmonic components are fed back to the input through the feedback network. Then, one of the input signals and the feedback components experience another second-order distortion and generate the IMD3. Thus, if we can modify the feedback path at 2ω and $\Delta\omega$, we can modify the second-order effect on the IMD3. The capacitor (C_f) has a very large impedance at the $\Delta\omega$ frequency, while it has a small impedance at 2ω. Large impedance can almost remove the feedback path, and thus we can remove $\Delta\omega$ components at the input. Small impedance can increase the loop gain of the feedback more at the 2ω frequency than at the desired frequency (ω), and a higher loop gain can desensitize the distortion at 2ω. By applying the above frequency selective feedback using a shunt capacitor, we can reduce the second-order harmonic feedback to the input as shown in Figure 4. The following Volterra series analysis can provide a better understanding of the above discussion.

The simplified small signal equivalent circuit of Figure 1 is shown in Figure 5. Y_i is the admittance looking into X node, including 50-Ω source impedance (R_s), input matching component (Z_g), and gate-source capacitance (C_{gs}). Y_o is the load admittance. Even though the proposed amplifier is based on a cascode topology, it can be modeled as a common source (CS) topology. Because a cascode transistor

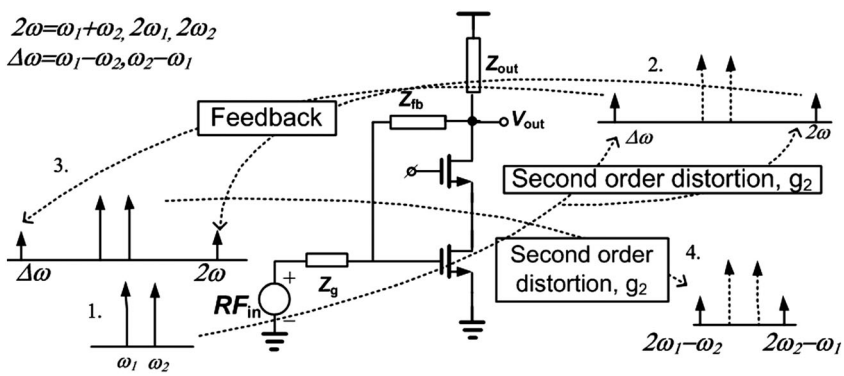

Figure 3. The second-order distortion contribution to the IMD3 through feedback.

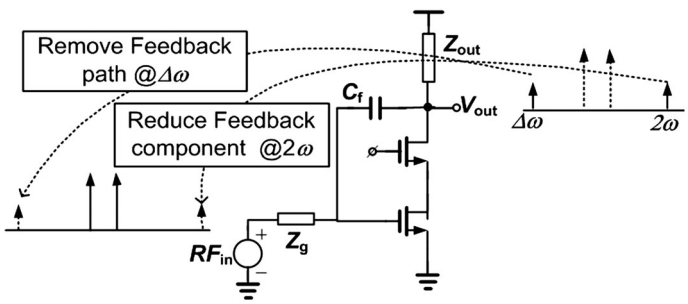

Figure 4. Reduction of the second-order interaction to the IMD3 using the frequency selective feedback.

Copyright © 2015 John Wiley & Sons, Ltd.

DOI: 10.1002/cta

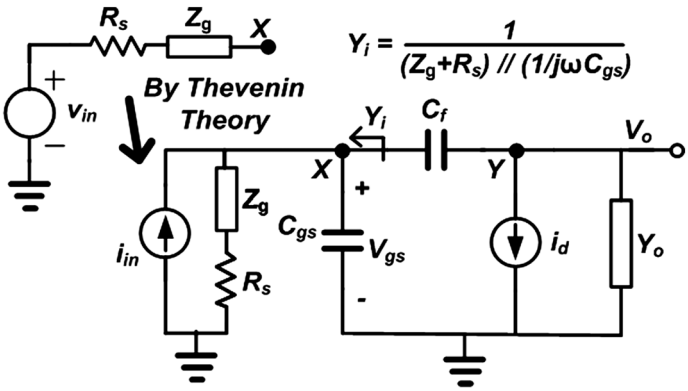

Figure 5. Small signal equivalent circuit of the proposed amplifier.

operates as a current buffer, we can omit it for simplicity in the following analysis. However, the cascode topology provides good isolation between the input and output, and therefore we can control the feedback capacitance (C_f) of the cascode topology more accurately than that of the CS topology. In the following Volterra series linearity analysis, we omit the bond-wire: it complicates the analysis and does not add any insight. Also, in order to determine the *IIP3* with various feedback capacitances which will disturb input matching, we first calculate *OIP3*, which is quite insensitive to input matching over feedback capacitance variation and find out *IIP3* using the relationship of $IIP3 = OIP3 - Gain$.

The relationship between the drain current and the input voltage of the transistor can be expressed with the following equation [13]:

$$i_d = g_1 \cdot v_{gs} + g_2 \cdot v_{gs}^2 + g_3 \cdot v_{gs}^3 + \cdots, \tag{12}$$

where

$$g_1 = \frac{\partial I_D}{\partial V_{GS}} \quad g_2 = \frac{1}{2}\frac{\partial^2 I_D}{\partial V_{GS}} \quad g_3 = \frac{1}{6}\frac{\partial^3 I_D}{\partial V_{GS}} \tag{13}$$

The output voltage (v_o) can be expressed as a function of the input current (i_{in}), where i_{in} is converted from v_{in} (input source) by Thevenin theory as shown in Figure 5.

$$v_o(i_{in}) = B_1(j\omega) \circ i_{in} + B_2(j\omega_1, j\omega_2) \circ i_{in}^2 + B_3(j\omega_1, j\omega_2, j\omega_3) \circ i_{in}^3. \tag{14}$$

where $B_n(j\omega_1, j\omega_2, \ldots, j\omega_n)$ is the Laplace transform of the n-th-order Volterra kernel, called the n-th-order nonlinear transfer function, and the operator '$\circ$' means 'multiply the amplitude of each frequency component in i_{in}^n by the magnitude of the corresponding coefficient $B_n(j\omega_1, j\omega_2, \ldots, j\omega_n)$ and shift its phase by the phase of $B_n(j\omega_1, j\omega_2, \ldots, j\omega_n)$' [14].

The term v_{gs} can be expressed as a function of i_{in} using the Volterra-series expansion:

$$v_{gs}(j\omega) = A_1(j\omega) \circ i_{in} + A_2(j\omega_1, j\omega_2) \circ i_{in}^2 + A_3(j\omega_1, j\omega_2, j\omega_3) \circ i_{in}^3. \tag{15}$$

From Figure 5, we can develop the current relationships by applying Kirchhoff's current law at the X and Y nodes, respectively, as follows:

$$v_{gs} \cdot Y_i + (v_{gs} - v_o) \cdot j\omega C_f - i_{in} = 0 \tag{16}$$

$$i_d + v_o \cdot Y_o + (v_o - v_{gs}) \cdot j\omega C_f = 0 \tag{17}$$

We will find each current harmonic with an iterative approach in the frequency domain [14–16]. By substituting (14) and (15) into (16) and (17), the amplitudes of required harmonics in (16) and (17) can be found. By equating the first-order terms in (A.1) and (A.2), we can obtain the first-order harmonic coefficients, $A_1(j\omega)$ and $B_1(j\omega)$, in (14) and (15) as follows:

Copyright © 2015 John Wiley & Sons, Ltd.

DOI: 10.1002/cta

$$A_1(j\omega) = \frac{1 + B_1(j\omega)\cdot j\omega C_f}{a(j\omega)} \tag{18}$$

$$B_1(j\omega) = \frac{-c(j\omega)}{a(j\omega)\cdot b(j\omega) + c(j\omega)\cdot j\omega C_f} \tag{19}$$

where

$$a(j\omega) = Y_i(j\omega) + j\omega C_f \tag{20}$$

$$b(j\omega) = Y_o(j\omega) + j\omega C_f \tag{21}$$

$$c(j\omega) = g_1 - j\omega C_f \cong g_1 \tag{22}$$

By repeating the above procedure using the second- and third-order harmonic components of the input current harmonic, the other amplitudes as functions, A_2, A_3, B_2, and B_3, can be found and are expressed as the following equations. Detailed calculations are given in (A.3)–(A.6).

$$A_2(j\omega_1, j\omega_2) = \frac{B_2(j\omega_1, j\omega_2)\cdot j(\omega_1 + \omega_2)C_f}{\mathrm{a}(j\omega_1 + j\omega_2)} \tag{23}$$

$$B_2(j\omega_1, j\omega_2) = \frac{-g_2\cdot A_1(j\omega_1)\cdot A_1(j\omega_2)\cdot \mathrm{a}\,(j\omega_1 + j\omega_2)}{\mathrm{a}(j\omega_1 + j\omega_2)\cdot \mathrm{b}\,(j\omega_1 + j\omega_2) + \mathrm{c}(j\omega_1 + j\omega_2)\cdot j\,(\omega_1 + \omega_2)C_f} \tag{24}$$

$$A_3(j\omega_1, j\omega_2, j\omega_3) = \frac{B_3(j\omega_1, j\omega_2, j\omega_3)\cdot j\,(\omega_1 + \omega_2 + \omega_3)C_f}{\mathrm{a}(j\omega_1 + j\omega_2 + j\omega_3)} \tag{25}$$

$$B_3(j\omega_1, j\omega_2, j\omega_3) = \frac{\left\{\begin{array}{c} -2g_2\overline{A_1(j\omega_1)\,A_2\,(j\omega_2, j\omega_3)} \\ -g_3 A_1(j\omega_1)\,A_1\,(j\omega_2)\,A_1\,(j\omega_3) \end{array}\right\}\mathrm{a}\,(j\omega_1 + j\omega_2 + j\omega_3)}{\left\{\begin{array}{c} a\,(j\omega_1 + j\omega_2 + j\omega_3)\cdot b\,(j\omega_1 + j\omega_2 + j\omega_3) \\ +c\,(j\omega_1 + j\omega_2 + j\omega_3)\cdot j\,(\omega_1 + \omega_2 + \omega_3)C_f \end{array}\right\}} \tag{26}$$

where

$$\overline{A_1(j\omega_1)\,A_2\,(j\omega_2, j\omega_3)} = \frac{1}{3}\{A_1(j\omega_1)\cdot A_2(j\omega_2, j\omega_3) + A_1(j\omega_2)\cdot A_2(j\omega_1, j\omega_3) + A_1(j\omega_3)\cdot A_2(j\omega_1, j\omega_2)\} \tag{27}$$

A_n and B_n can be re-expressed in terms of the feedback system which is shown in Figure 2 by using the loop gain, $T(j\omega)$, and the feedback factor, $f(j\omega)$, which are given by,

$$T(j\omega) = \frac{j\omega C_f(Y_i(j\omega) + g_1)(Y_o(j\omega) + g_1)}{(g_1 - j\omega C_f)Y_i(j\omega)Y_o(j\omega)} \tag{28}$$

$$f(j\omega) = -\frac{j\omega C_f(Y_i(j\omega) + g_1)(Y_o(j\omega) + g_1)}{g_1(g_1 - j\omega C_f)} \tag{29}$$

Then, $B_1(j\omega)$ and $B_3(j\omega_1, j\omega_2, j\omega_3)$ can be re-expressed as shown in (30) and (34) as follows.

$$B_1(j\omega) = \frac{G_{op1}(j\omega)}{1 + G_{op1}(j\omega)\cdot f(j\omega)} = \frac{G_{op1}(j\omega)}{1 + T(j\omega)} \tag{30}$$

where

$$G_{op1}(j\omega) = \frac{-g_1}{Y_i(j\omega)Y_o(j\omega)} \tag{31}$$

Copyright © 2015 John Wiley & Sons, Ltd.

DOI: 10.1002/cta

$$G_{op2}(j\omega_1, j\omega_2) = \frac{-g_2}{Y_i(j\omega_1)Y_i(j\omega_2)Y_o(j\omega_1 + j\omega_2)} \tag{32}$$

$$G_{op3}(j\omega_1, j\omega_2, j\omega_3) = \frac{-g_3}{Y_i(j\omega_1)Y_i(j\omega_2)Y_i(j\omega_3)Y_o(j\omega_1 + j\omega_2 + j\omega_3)} \tag{33}$$

$$B_3(j\omega_1, j\omega_2, j\omega_3) = \frac{-\frac{2}{3}\left\{\frac{G_{op2}^2(j\omega_1, j\omega_2)\cdot f(j\omega_1 + j\omega_2)}{1 + T(j\omega_1 + j\omega_2)} + \frac{2G_{op2}^2(j\omega_1, j\omega_3)\cdot f(j\omega_1 + j\omega_3)}{1 + T(j\omega_1 + j\omega_3)}\right\} + G_{op3}(j\omega_1, j\omega_2, j\omega_3)}{(1 + T(j\omega_1))(1 + T(j\omega_2))(1 + T(j\omega_3))(1 + T(j\omega_1 + j\omega_2 + j\omega_3))} \tag{34}$$

For the *OIP3* calculation, the assumptions are as follows

$$\omega_1 = \omega_2 = \omega_b \tag{35}$$

$$\omega_3 = -\omega_a \tag{36}$$

$$\Delta\omega = \omega_b - \omega_a \tag{37}$$

$$\omega \approx \omega_a \approx \omega_b \tag{38}$$

and the two-tone excitation is applied to the input. The two-tone excitation is given by

$$i_{in} = \frac{A\{Cos(\omega_a t) + Cos(\omega_b t)\}}{R_s + Z_g} \tag{39}$$

where A is the amplitude of the input signal voltage. *AIP3* is given by [17]

$$AIP3(2\omega_b - \omega_a) = \sqrt{\frac{4}{3}\left|\frac{B_1(j\omega_b)}{B_3(j\omega_b, j\omega_b, -j\omega_a)}\right|} \tag{40}$$

The *OIP3* can then be represented by the following equation [18]:

$$OIP3(2\omega_b - \omega_a) = \frac{Y_o}{2}\{|B_1(j\omega_b)|AIP3(2\omega_b - \omega_a)\}^2 = \frac{2}{3}Y_o\left|\frac{B_1(j\omega_b)^3}{B_3(j\omega_b, j\omega_b, -j\omega_a)}\right|. \tag{41}$$

By substituting (35), (36), (37), and (38) into (26), $B_3(j\omega_b, j\omega_b, -j\omega_a)$ is obtained. The detailed calculation is given in (A.7). Then, *OIP3* is given by the following equation:

$$OIP3(2\omega_b - \omega_a) \approx \frac{2}{3}Y_o\left|\frac{G_{op1}(j\omega)^3}{\varepsilon(j\omega_b, j\omega_b, -j\omega_a)}\right|, \tag{42}$$

where $\varepsilon(j\omega_b, j\omega_b, -j\omega_a)$ is as follows

$$\varepsilon(j\omega_b, j\omega_b, -j\omega_a) = \left[\frac{2}{3}\left\{\frac{G_{op2}^2(j\omega, j\omega)\cdot f(j2\omega)}{1 + T(j2\omega)} + \frac{2G_{op2}^2(j\omega, -j\omega)\cdot f(j\Delta\omega)}{1 + T(j\Delta\omega)}\right\} - G_{op3}(j\omega, j\omega, -j\omega)\right]\cdot\frac{1}{1 + T(-j\omega)} \tag{43}$$

When we compare b_3, the third-order distortion coefficient of the low-frequency feedback (6), with $B_3(j\omega_b, j\omega_b, -j\omega_a)$, that of the high-frequency feedback (34), we find that the second-order

Copyright © 2015 John Wiley & Sons, Ltd.

DOI: 10.1002/cta

distortion contribution to the third-order nonlinearity is related to the second-order harmonic frequency such as 2ω and $\Delta\omega$, while in the low-frequency region it is related only to the operating frequency. So, contrary to the low-frequency feedback, we can control the second-order distortion contribution to the third-order nonlinearity in a high-frequency region using the frequency selective characteristics of the feedback element. This becomes more obvious when we look at the details of the *OIP3* calculation. As can be seen, in the first bracket of (43), the second-order distortion contribution to the third-order nonlinearity is related to the loop gain and the feedback factor at the second-order frequencies, 2ω and $\Delta\omega$. Also, the term outside of the bracket reduces the third- and second-order distortion contributions to the IMD3, as is the same with the case of the low-frequency feedback as shown in (7). However, too high loop gain $T(j\omega)$ introduces a corresponding gain reduction. Thus it is better to modify the loop gain at the 2ω and $\Delta\omega$ frequencies without disturbing the loop gain at the operating frequency. If we use a proper value (~few hundreds fF) of the capacitor as a feedback element, we can have large impedance at the $\Delta\omega$ frequency, which almost removes the feedback path at the $\Delta\omega$ frequency with a small value of $f(j\Delta\omega)$, and small impedance at the 2ω frequency, which will increase the loop gain at 2ω, $T(j2\omega)$. So, as can be expected from (43), we can minimize the effect of the harmonic feedback as shown in Figure 4. In order to quantify the loop gain over the frequency, it is useful to investigate it in more detail. With a proper approximation, (28) can be expressed by the following equation:

$$T(j\omega) \cong \frac{j\omega C_f \cdot g_1^2}{c(j\omega)\cdot Y_i(j\omega)\cdot Y_o(j\omega)}. \tag{44}$$

In order to increase the loop gain at 2ω, it is better to make $Y_i(j\omega)$ and $Y_o(j\omega)$ resonate at 2ω with the proper choice of C_f.

Figure 6 plots $Y_i(j\omega)$ and $Y_o(j\omega)$ over the frequency, and it is found that they resonate at 2ω (in this case 1800 MHz). Figure 7 shows the $T(j\omega)$ over the frequency with C_f of 150 fF. $T(j2\omega = 1800\,\text{MHz})$ is 14 dB larger than $T(j\omega = 900\,\text{MHz})$. Figure 8 shows the simulation results as well as the calculation results of the *IIP3* over various values of C_f. In the calculation/simulation of *IIP3* of Figure 8, we assume a proper input matching network (S11 is less than -10 dB) over various value of C_f by adjusting L_g of Figure 1. As expected from (A.9), *IIP3* improves as C_f becomes high. However, a too high value of C_f will reduce the gain and will also degrade the NF, which is discussed in the following section. Thus, C_f is chosen to be 150 fF, and the corresponding *IIP3* is around 8 dBm.

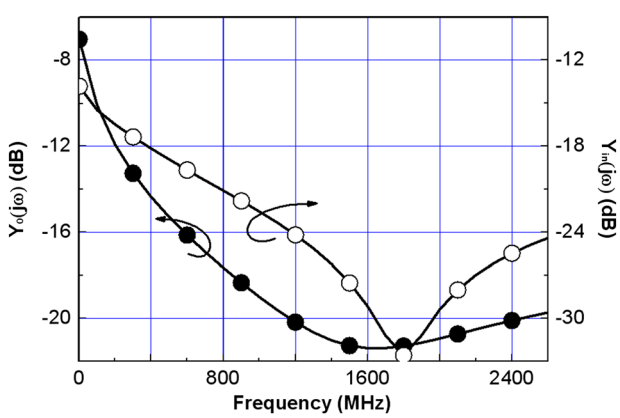

Figure 6. Gate-source/load admittance calculation result vs. the frequency.

Copyright © 2015 John Wiley & Sons, Ltd.

DOI: 10.1002/cta

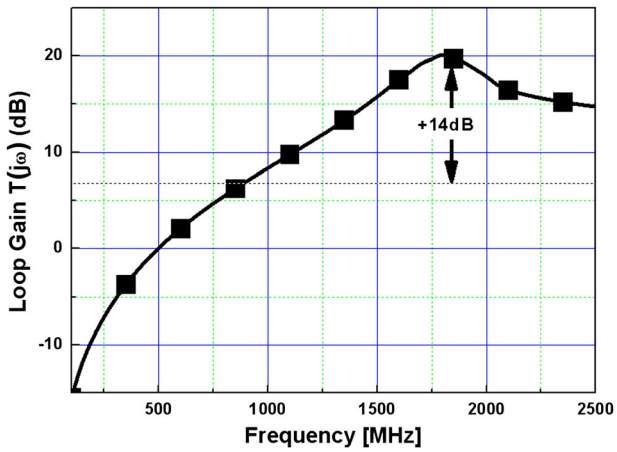

Figure 7. Loop gain calculation result vs. the frequency.

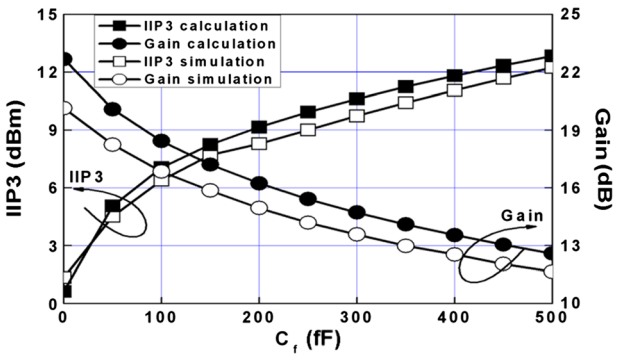

Figure 8. The simulation and calculation results of *OIP3*, *IIP3* and *Gain* over the feedback capacitance.

3. NOISE ANALYSIS

The noise model for the proposed amplifier is depicted in Figure 9(a). Figure 9(b) shows the input referred equivalent noise sources with noiseless passive elements. In a cascode topology because the noise contribution from the cascode transistor is not dominant in the total output noise, the noise contributors in the cascode transistor can be neglected for the simplicity in the analysis [19–21]. The drain thermal noise (i_{nd}) and the induced-gate noise (i_{ng}) currents are the most effective noise contributors to the overall NF [22–25], and these densities are as follows

$$\overline{i_{nd}^2} = 4\,kTf_{\Delta}\gamma g_{d0} \tag{45}$$

$$\overline{i_{ng}^2} = 4\,kTf_{\Delta}\delta\frac{\omega^2 {C_{gs}}^2}{5g_{d0}} \tag{46}$$

$$\overline{i_{nd}^* i_{ng}} = c\cdot\sqrt{\overline{i_{nd}^2}\;\overline{i_{ng}^2}}, \tag{47}$$

where k is Boltzmann's constant, T is the absolute temperature, f_{Δ} is the frequency interval, γ and δ are the bias-dependent noise coefficients [26, 27], g_{d0} is the drain-source conductance at zero drain-source voltage, C_{ox} is the gate-oxide capacitance per unit area, W is the channel width, L is the channel length, and c is the correlation coefficient between the induced gate noise and the thermal noise of the drain current. The value of the parameters in the calculation is shown in Table I.

Copyright © 2015 John Wiley & Sons, Ltd.

DOI: 10.1002/cta

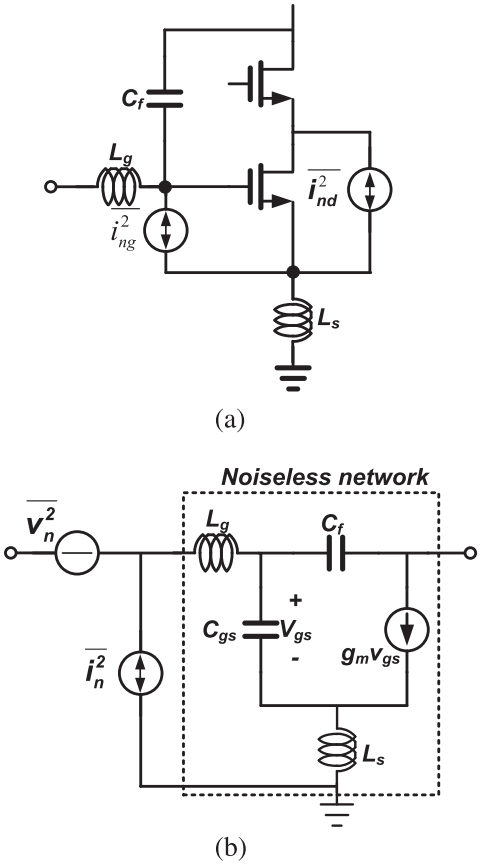

Figure 9. (a) Noise model for the amplifying transistor; (b) the input referred equivalent noise sources for the noise analysis.

Table I. Parameters and values in the NF calculation.

Parameter	Value
γ	3
δ	3.2
g_m	140 mS
g_{do}	$\approx g_m$
W	480 μm
L	180 nm
C_{ox}	10.9 mF/m^2

The input referred noise generators $\overline{i_n^2}$ and $\overline{v_n^2}$ in Figure 9 are expressed, as follows [28]:

$$i_n = a \cdot i_{nd} + b \cdot i_{ng} \tag{48}$$

$$v_n = c \cdot i_{nd} + d \cdot i_{ng} \tag{49}$$

where

$$a = -\frac{\frac{1}{j\omega C_{gs}} + \frac{1}{j\omega C_f}}{\frac{1}{j\omega C_{gs}} + j\omega L_s + g_m \frac{L_s}{C_{gs}} + \frac{g_m}{\omega^2 C_{gs} C_f}} \tag{50}$$

Copyright © 2015 John Wiley & Sons, Ltd.

DOI: 10.1002/cta

$$b = \frac{\frac{1}{j\omega C_{gs}}\left(1 - \frac{g_m}{j\omega C_f}\right)}{\frac{1}{j\omega C_{gs}} + j\omega L_s + g_m \frac{L_s}{C_{gs}} + \frac{g_m}{\omega^2 C_{gs} C_f}} \tag{51}$$

$$c = \frac{\frac{1}{C_f}\left(\frac{1}{\omega^2 C_{gs}} - L_s - L_g\right) - \frac{L_g}{C_{gs}}}{\frac{1}{j\omega C_{gs}} + j\omega L_s + g_m \frac{L_s}{C_{gs}} + \frac{g_m}{\omega^2 C_{gs} C_f}} \tag{52}$$

$$d = \frac{\frac{L_g}{C_{gs}} - \frac{g_m\left(L_g + L_s\right)}{j\omega C_{gs} C_f}}{\frac{1}{j\omega C_{gs}} + j\omega L_s + g_m \frac{L_s}{C_{gs}} + \frac{g_m}{\omega^2 C_{gs} C_f}}. \tag{53}$$

Using the above input referred noise generators, the noise figure can be expressed with the following equation:

$$\begin{aligned} F &= 1 + \frac{\overline{\left|i_n + \frac{v_n}{R_s}\right|^2}}{\overline{i_{nRs}^2}} \\ &= 1 + \left|a + \frac{c}{R_s}\right|^2 \cdot \frac{\overline{i_{nd}^2}}{\overline{i_{nRs}^2}} + \left|b + \frac{d}{R_s}\right|^2 \cdot \frac{\overline{i_{ng}^2}}{\overline{i_{nRs}^2}} + \frac{2Re\left\{\left(a + \frac{c}{R_s}\right)^* \left(b + \frac{d}{R_s}\right) \cdot \overline{i_{nd}^* i_{ng}}\right\}}{\overline{i_{nRs}^2}} \\ &\approx 1 + \left|\frac{1 + \frac{C_{gs}}{C_f} + \frac{1}{R_s} \cdot \left(j\omega L_g \frac{C_{gs}}{C_f} + \frac{1}{j\omega C_f} + j\omega L_g\right)}{\frac{g_m}{j\omega C_f}}\right|^2 \cdot \frac{\overline{i_{nd}^2}}{\overline{i_{nRs}^2}} \\ &\quad + \left|\frac{1 + \frac{g_m L_g}{R_s C_f} - \frac{g_m}{j\omega C_f} + \frac{j\omega L_g}{R_s}}{\frac{g_m}{j\omega C_f}}\right|^2 \cdot \frac{\overline{i_{ng}^2}}{\overline{i_{nRs}^2}} \\ &\quad + \left(\frac{\frac{2}{g_m R_s}}{1 + 2\omega^2 L_s C_f}\right) \cdot \frac{\overline{i_{nd}^* i_{ng}}}{\overline{i_{nRs}^2}} \end{aligned} \tag{54}$$

where R_s is the input source resistance (e.g. $R_s = 50\,\Omega$) and i_{nRs} is the noise current due to R_s. Then, the noise density $\overline{i_{nRs}^2}$ is given by [19],

$$\overline{i_{nRs}^2} = \frac{4kTf_\Delta}{R_s}. \tag{55}$$

The second term in (54) shows the drain thermal noise contribution, and the third term shows the induced-gate noise contribution to the total NF. The last term shows that of the correlation noise between the drain thermal noise and the induced gate noise. In this calculation, the correlation coefficient, c, is assumed to be 0.4 according to [19]. As one can see (54), the contribution of the drain thermal noise can be minimized with the optimum value of the feedback capacitance, the induced gate noise slightly decrease with the increase of feedback capacitance and the correlation noise also slightly increase with the increase of the feedback capacitance. Thus, the overall NF can be minimized with the proper value of the feedback capacitance.

The results of the above NF calculation and the simulation over various feedback capacitance values are shown in Figure 10. The difference between the simulation and calculation results is originated

Copyright © 2015 John Wiley & Sons, Ltd.

DOI: 10.1002/cta

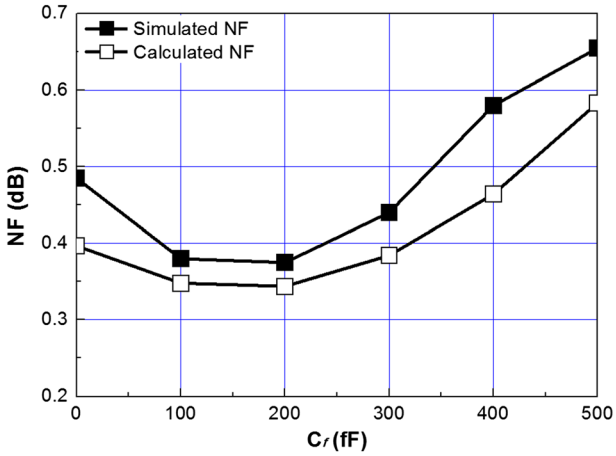

Figure 10. NF simulation/calculation results vs. the feedback capacitance.

from the cascode transistor, which is omitted for simplicity in the calculation [21]. As expected from Figure 10, the proper value of the feedback capacitance (~150 fF) slightly improves the NF. The input impedance is given by (56).

$$Z_{in} = \left(\frac{1}{j\omega C_{gs}} + j\omega L_s + g_m \frac{L_s}{C_{gs}}\right) \| \left(\frac{\frac{1}{j\omega C_f} + Z_o}{1 + \frac{g_m Z_o}{1 + g_m(j\omega L_s) - \omega^2 L_s C_{gs}}}\right) \tag{56}$$

4. DESIGN AND MEASUREMENT RESULTS

The proposed LNA was fabricated with a 1-poly-6-metal 0.18 μm CMOS process. The core area of the LNA occupies ~48 000 μm^2, excluding the pads with dimensions of 150 μm × 320 μm. Figure 11 shows a microphotograph of the proposed LNA. The shunt feedback capacitor (C_f) is implemented

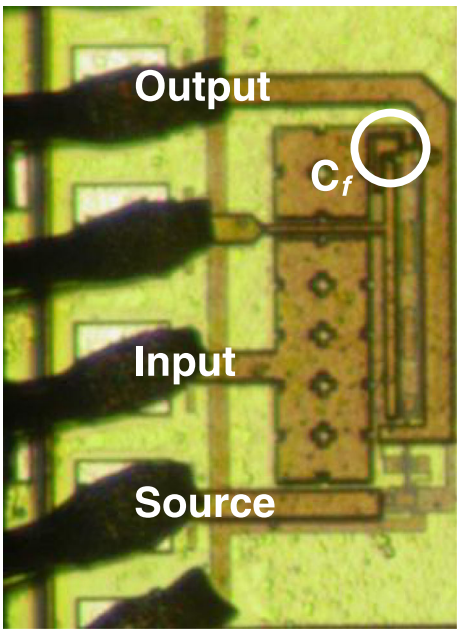

Figure 11. The microphotograph of the LNA.

Copyright © 2015 John Wiley & Sons, Ltd.

DOI: 10.1002/cta

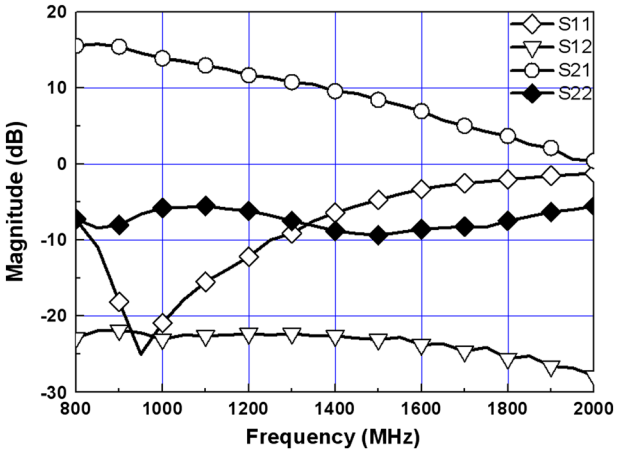

Figure 12. Measurement result of the S-parameter of the LNA.

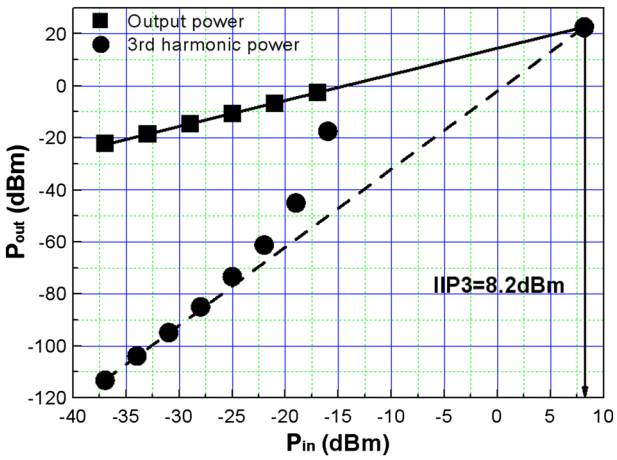

Figure 13. *IIP3* measurement results of the LNA.

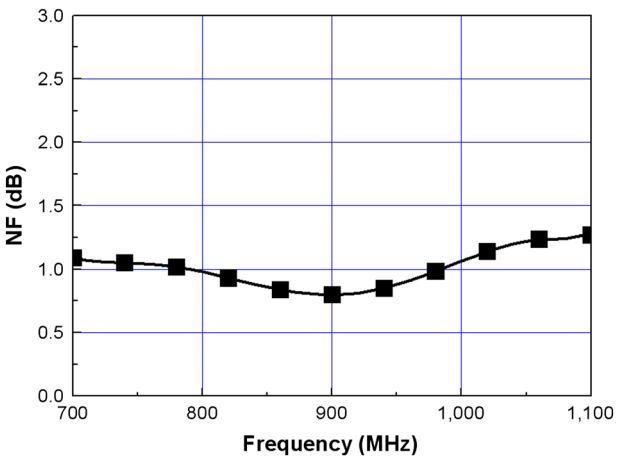

Figure 14. NF measurement of the LNA.

Copyright © 2015 John Wiley & Sons, Ltd.

DOI: 10.1002/cta

Table II. Performance comparison with the state-of-the-art LNAs.

	Tech. [μm]	Freq. [GHz]	IIP3 [dBm]	NF [dB]	Gain [dB]	P_{DC} [mW]
This work	0.18 CMOS	0.9	+8.2	0.7	15.1	14.4
'04 TMTT [29]	0.25 CMOS	0.9	−4	1.35	12	2
'08 MWCL [30]	0.13 CMOS	2.14	−5.3	1.97	16.6	7.5
'06 MWCL [31]	0.18 CMOS	2	13.3	1.4	12.8	14.4
'09 'ISSCC [32]	0.18 CMOS	0.3 ~0.92	−3.2	2	21	3.6
'08 JSSC [33]	0.13 CMOS	5	−10	2.1	20	3.8
'08 JSSC [34]	0.13 CMOS	0.8 ~2.1	16	2.6	14.5	14.5
'08 RFIC [35]	0.35 SiGe BiCMOS	0.9	+11	0.9	16	28
'07 MWCL [36]	0.18 CMOS	2 ~11.5	+3	3.1	14.8	13.4
'09 JSSC [37]	0.13 CMOS	2.4	−11	2	24	2.6
'05 JSSC [38]	0.18 CMOS	2 ~4.6	−7	2.3	9.8	12.6

by using the metal-insulator-metal (MIM) capacitor. The chip is mounted on the printed circuit board (PCB) using the chip on board (COB) technique. The external components are used for the input and output matching as shown in Figure 1. The input transistor and the cascode transistor sizes are both 480/0.18 μm. Figure 12 shows the S-parameter measurement result of the LNA: the input matching is below −10 dB, the output matching is around −8 dB, the reverse isolation is −22 dB, and the gain is 15.1 dB. Figure 13 shows the *IIP3* measurement result over various input powers. The *IIP3* is measured by a two-tone test with input frequencies of 900 MHz and 901 MHz and shows a measurement of +8.2 dBm, which is high enough to meet the CDMA requirement [3]. The input P1 dB is −13 dBm. Figure 14 shows the NF measurement result: 0.7 dB at 900 MHz. The power consumption is 14.4 mW at a supply voltage of 1.2 V. Table II shows the performance summary of the LNA and the state-of-the-art LNAs. Our results show the lowest NF while achieving high enough IIP3 and gain for the CDMA at low power consumption among 900-MHz LNAs.

5. CONCLUSION

The frequency selective feedback using a shunt capacitor is a useful technique to enhance both the linearity and noise performances. The feedback introduces a second-order harmonic distortion contribution to the IMD3 that results in a limitation of the *IIP3* enhancement by the feedback. By employing the shunt capacitor as the frequency selective feedback element, we can effectively remove the feedback path at the sub-harmonic frequency and increase the loop gain at the second harmonic frequency without disturbing the wanted frequency loop gain. Thus, we can reduce the second-order distortion contribution to the IMD3. Also, the shunt feedback capacitor slightly improves the noise performance. The proposed amplifier is designed with 0.18-μm CMOS technology, and the measured performance shows an *IIP3* of +8.2 dBm, an NF of 0.7 dB, and a gain of 15.1 dB with 14.4-mW power consumption at a 1.2-V supply voltage.

APPENDIX A

Considering each harmonic term, (16) and (17) can be represented, as follows:

The first term:

$$1 = \{A_1(j\omega)\circ i_{in}\}\cdot Y_{in}(j\omega) + \{A_1(j\omega)\circ i_{in} - B_1(j\omega)\circ i_{in}\}\cdot j\omega C_f \tag{A.1}$$

$$0 = g_1\cdot A_1(j\omega)\circ i_{in} + Y_o(j\omega)\cdot B_1(j\omega)\circ i_{in} + \{B_1(j\omega)\circ i_{in} - A_1(j\omega)\circ i_{in}\}\cdot j\omega C_f \tag{A.2}$$

Copyright © 2015 John Wiley & Sons, Ltd.

DOI: 10.1002/cta

The second term:

$$0 = \left\{A_2(j\omega_1, j\omega_2) \circ i_{in}^2\right\} \cdot Y_{in}(j\omega_1 + j\omega_2) + \left\{A_2(j\omega_1, j\omega_2) \circ i_{in}^2 - B_2(j\omega_1, j\omega_2) \circ i_{in}^2\right\} \cdot (j\omega_1 + j\omega_2) \cdot C_f \tag{A.3}$$

$$0 = g_1 \cdot A_2(j\omega_1, j\omega_2) \circ i_{in}^2 + g_2 \cdot A_1(j\omega_1) \cdot A_1(j\omega_2) \circ i_{in}^2 + Y_o(j\omega_1 + j\omega_2) \cdot B_2(j\omega_1, j\omega_2) \circ i_{in}^2 + \left\{B_2(jw_1, jw_2) \circ i_{in}^2 - A_2(jw_1, jw_2) \circ i_{in}^2\right\} \cdot (jw_1 + jw_2) \cdot C_f \tag{A.4}$$

The third term:

$$0 = \left\{A_3(j\omega_1, j\omega_2, j\omega_3) \circ i_{in}^3\right\} \cdot Y_{in}(j\omega_1 + j\omega_2 + j\omega_3) + \left\{A_3(j\omega_1, j\omega_2, j\omega_3) - B_3(j\omega_1, j\omega_2, j\omega_3)\right\} \circ i_{in}^3 \cdot j(\omega_1 + \omega_2 + \omega_3) C_f \tag{A.5}$$

$$\begin{aligned} 0 = {} & g_1 \cdot A_3(j\omega_1, j\omega_2, j\omega_3) \circ i_{in}^3 + 2 \cdot g_2 \cdot \overline{A_1(j\omega_1) \cdot A_2(j\omega_2, j\omega_3)} \circ i_{in}^3 \\ & + g_3 \cdot A_1(j\omega_1) \cdot A_1(j\omega_2) \cdot A_1(j\omega_3) \circ i_{in}^3 + Y_o(j\omega_1 + j\omega_2 + j\omega_3) \cdot B_3(j\omega_1, j\omega_2, j\omega_3) \circ i_{in}^3 \\ & + \left\{B_3(j\omega_1, j\omega_2, j\omega_3) - A_3(j\omega_1, j\omega_2, j\omega_3)\right\} \circ i_{in}^3 \cdot j(\omega_1 + \omega_2 + \omega_3) C_f \end{aligned} \tag{A.6}$$

Using (27), (35), (36), (37), and (38), $B_3(j\omega_b, j\omega_b, -j\omega_a)$ can be represented, as follows

$$\begin{aligned} & B_3(j\omega_b, j\omega_b, -j\omega_a) = \\ & \left[g_2^2 \frac{2}{3} \left\{ \frac{j2\omega C_f}{\mathrm{a}(j2\omega)\mathrm{b}(j2\omega) + \mathrm{c}(j2\omega) j2\omega C_f} + \frac{2j\Delta\omega C_f}{\mathrm{a}(j\Delta\omega)\mathrm{b}(j\Delta\omega) + \mathrm{c}(j\Delta\omega) j\Delta\omega C_f} \right\} - g_3 \right] \\ & \cdot \frac{\mathrm{a}(j\omega)\mathrm{b}(j\omega)}{\left\{\mathrm{a}(j\omega)\mathrm{b}(j\omega) + \mathrm{c}(j\omega) j\omega C_f\right\}^2} \cdot \left| \frac{\mathrm{b}(j\omega)}{\mathrm{a}(j\omega)\mathrm{b}(j\omega) + \mathrm{c}(j\omega) j\omega C_f} \right|^2 \end{aligned} \tag{A.7}$$

The *OIP3* can also be represented by the following equation:

$$OIP3(2\omega_b - \omega_a) \cong \frac{2}{3} Y_o \left| \frac{\mathrm{c}(j\omega)^3}{\mathrm{a}(j\omega)\mathrm{b}(j\omega)^2} \frac{1}{\varepsilon'(j\omega_b, j\omega_b, -j\omega_a)} \right| \tag{A.8}$$

$$\varepsilon'(j\omega_b, j\omega_b, -j\omega_a) = \left[g_2^2 \frac{2}{3} \left\{ \begin{array}{l} \dfrac{2j\Delta\omega C_f}{\mathrm{a}(j\Delta\omega)\mathrm{b}(j\Delta\omega) + \mathrm{c}(j\Delta\omega) j\Delta\omega C_f} \\ + \dfrac{j2\omega C_f}{\mathrm{a}(j2\omega)\mathrm{b}(j2\omega) + \mathrm{c}(j2\omega) j2\omega C_f} \end{array} \right\} - g_3 \right] \cdot \left\{ \frac{\mathrm{b}(j\omega)}{\mathrm{a}(j\omega)\mathrm{b}(j\omega) + \mathrm{c}(j\omega) j\omega C_f} \right\}^*$$

$*$: *complex conjugate*

(A.9)

ACKNOWLEDGEMENTS

This work was supported by the National Research Foundation of Korea(NRF) grant funded by the Korea government (MSIP) (2012R1A1A2044158).

Copyright © 2015 John Wiley & Sons, Ltd.

DOI: 10.1002/cta

REFERENCES

1. Ru Z, Klumperink EAM, Saavedra CE, Nauta B. A 300–800 MHz tunable filter and linearized LNA applied in a low-noise harmonic-rejection RF-sampling receiver. *IEEE Journal of Solid-State Circuits* 2010; **45**(5):967–978.
2. Ko B, Park B, Cheon D, Kim J, Ko J, Kim S. A nightmare for CDMA RF receiver: the cross modulation. *Proceedings of 1st IEEE Asia Pacific ASIC Conference*, 1999; 400–402.
3. Aparin V, Larson LE. Modified derivative superposition method for linearizing FET low-noise amplifiers. *IEEE Transactions on Microwave Theory and Techniques* 2005; **53**(2):571–581.
4. Razavi B. Design of Analog CMOS Integrated Circuits. McGraw-Hill: Boston, MA, 2001.
5. Webster D, Scott J, Haigh D. Control of circuit distortion by the derivative superposition method. *IEEE Microwave and Guided Wave Letters* 1996; **6**(3):123–125.
6. Kim B, Ko J, Lee K. A new linearization technique for MOSFET RF amplifier using multiple gated transistors. *IEEE Microwave and Guided Wave Letters* 2000; **10**(9):371–373.
7. Kim T-S, Kim S-K, Park J-S, Kim B-S. Post-linearization of differential CMOS low noise amplifier using cross-coupled FETs. *Journal of Semiconductor Technology and Science* 2008; **8**(4):283–287.
8. Kim TW, Kim B, Lee K. Highly linear receiver front-end adopting MOSFET transconductance linearization by multiple gated transistors. *IEEE Journal of Solid-State Circuits* 2004; **39**(1):223–229.
9. Jin TH, Kim TW. A 5.5-mW +9.4-dBm IIP3 1.8-dB NF CMOS LNA employing multiple gated transistors with capacitance desensitization. *IEEE Transactions on Microwave Theory and Techniques* 2010; **58**(10): 2529–2537.
10. Sansen W. Distortion in elementary transistor circuits. *IEEE Transactions on Circuits Systems II, Analog Digital Signal Processing* 1999; **46**(3):315–325.
11. Razavi B. RF Microelectronics. Prentice-Hall: Englewood Cliffs, NJ, 1998; 11–53.
12. Perumana BG, Zhan J-HC, Taylor SS, Carlton BR, Laskar J. Resistive-feedback CMOS low-noise amplifiers for multiband applications. *IEEE Transactions on Microwave Theory and Techniques* 2008; **56**(5):1218–1225.
13. Nam I, Kim B, Lee K. CMOS RF amplifier and mixer circuits utilizing complementary characteristics of parallel combined NMOS and PMOS devices. *IEEE Transactions on Microwave Theory and Techniques* 2005; **53**(5): 1662–1671.
14. Dogan H, Meyer RG. Intermodulation distortion in CMOS attenuators and switches. *IEEE Journal of Solid-State Circuits* 2007; **42**(3):529–539.
15. Kim TW. A common-gate amplifier with transconductance nonlinearity cancellation and its high-frequency analysis using the volterra series. *IEEE Transactions on Microwave Theory and Techniques* 2009; **57**(6):1461–1469.
16. Maas SA. Nonlinear Microwaves and RF Circuits (2nd edn). Artech House: Norwood, MA, 1997; 235–264.
17. Ha TT. Solid-State Microwave Amplifier Design. Wiley: New York, 1981, ch. 6.
18. Weiner DD, Spina JF. Sinusoidal Analysis and Modeling of Weakly Nonlinear Circuits. Van Nostrand Reinhold: New York, 1980.
19. Andreani P, Sjöland H. Noise optimization of an inductively degenerated CMOS low noise amplifier. *IEEE Transactions on Circuit and Systems II* 2001; **48**(9):835–841.
20. Bevilacqua A, Niknejad AM. An ultrawideband CMOS low-noise amplifier for 3.1–10.6-GHz wireless receivers. *IEEE Journal of Solid-State Circuits* 2004; **39**(12):2259–2268.
21. Goo J-S, Ahn H-T, Ladwig DJ, Z Y, Lee TH, Dutton RW. A noise optimization technique for integrated low-noise amplifiers. *IEEE Journal of Solid-State Circuits* 2002; **37**(8):994–1002.
22. Lee TH. The Design of CMOS Radio Frequency Integrated Circuits. Cambridge Univ. Press: Cambridge, UK, 1998.
23. Gray PR, Hurst PJ, Lewis SH, Meyer RG. Analysis and Design of Analog Integrated Circuits (4th edn). Wiley: New York, 2001.
24. van der Ziel A. Solid State Physical Electronics (3rd edn). Prentice-Hall: Englewood Cliffs, NJ, 1976, ch. 18.
25. van der Ziel A. Noise in Solid State Devices and Circuits. Wiley: New York, 1986.
26. Knoblinger G, Klein P, Baumann U. Thermal channel noise of quarter and subquarter micron NMOS FETs. *Proc. ICMTS*, 2000; 95–98.
27. Triantis DP, Birbas AN, Plevridis SE. Induced gate noise in MOSFETs revised: the submicron case. *Solid State Electronics* 1997; **41**(12):1937–1942.
28. Hashemi H, Hajimiri A. Concurrent multiband low-noise amplifiers-theory, design, and applications. *IEEE Transactions on Microwave Theory and Techniques* 2002; **50**(1):288–301.
29. Nguyen T-K, Kim C-H, Ihm G-J, Yang M-S, Lee S-G. CMOS low noise amplifier design optimization techniques. *IEEE Transactions on Microwave Theory and Techniques* 2004; **52**(5):1433–1442.
30. Song H, Kim H, Han K, Choi J, Park C, Kim B. A sub-2 dB NF dual-band CMOS LNA for CDMA/WCDMA applications. *IEEE Microwave Wireless Components Letters* 2008; **18**(3):212–214.
31. Kim T-S, Kim B-S. Post-linearization of cascode CMOS low noise amplifier using folded PMOS IMD sinker. *IEEE Mircowave Wireless Components Letters* 2006; **16**(4):182–184.
32. Woo S, Kim W, Lee C-H, Lim K, Laskar J. A 3.6 mW differential common-gate CMOS LNA with positive-negative feedback. *IEEE International Solid-State Circuits Conference*, 2009; 218–220.
33. Borremans J, Wambacq P, Soens C, Rolain Y, Kuijk M. Low-area active-feedback low-noise amplifier design in scaled digital CMOS. *IEEE Journal of Solid-State Circuits* 2008; **43**(11):2422–2433.
34. Chen W-H, Liu G, Zdravko B, Niknejad AM. A highly linear broadband CMOS LNA employing noise and distortion cancellation. *IEEE Journal of Solid-State Circuits* 2008; **43**(5):1164–1176.

Copyright © 2015 John Wiley & Sons, Ltd.

DOI: 10.1002/cta

35. Kang B, Yang S-G, Yu J, Choo W, Park B-H. Design and analysis of a high-performance cascode bipolar low noise amplifier with shunt feedback capacitor. *IEEE Radio Frequency Integrated Circuits Symposium*, 2008; 613–616.
36. Chen H-K, Chang D-C, Juang Y-Z, S-S L. A compact wideband CMOS low-noise amplifier using shunt resistive-feedback and series inductive-peaking techniques. *IEEE Microwave Wireless Components Letters* 2007; **17**(8): 616–618.
37. Joo S, Choi T-Y, Jung B. A 2.4-GHz resistive feedback LNA in 0.13-μm CMOS. *IEEE Journal of Solid-State Circuits* 2009; **44**(11):3019–3029.
38. Kim C-W, Kang M-S, Anh PT, Kim H-T, Lee S-G. An ultra-wideband CMOS low noise amplifier for 3–5-GHz UWB system. *IEEE Journal of Solid-State Circuits* 2005; **40**(2):544–547.

Copyright © 2015 John Wiley & Sons, Ltd.

DOI: 10.1002/cta