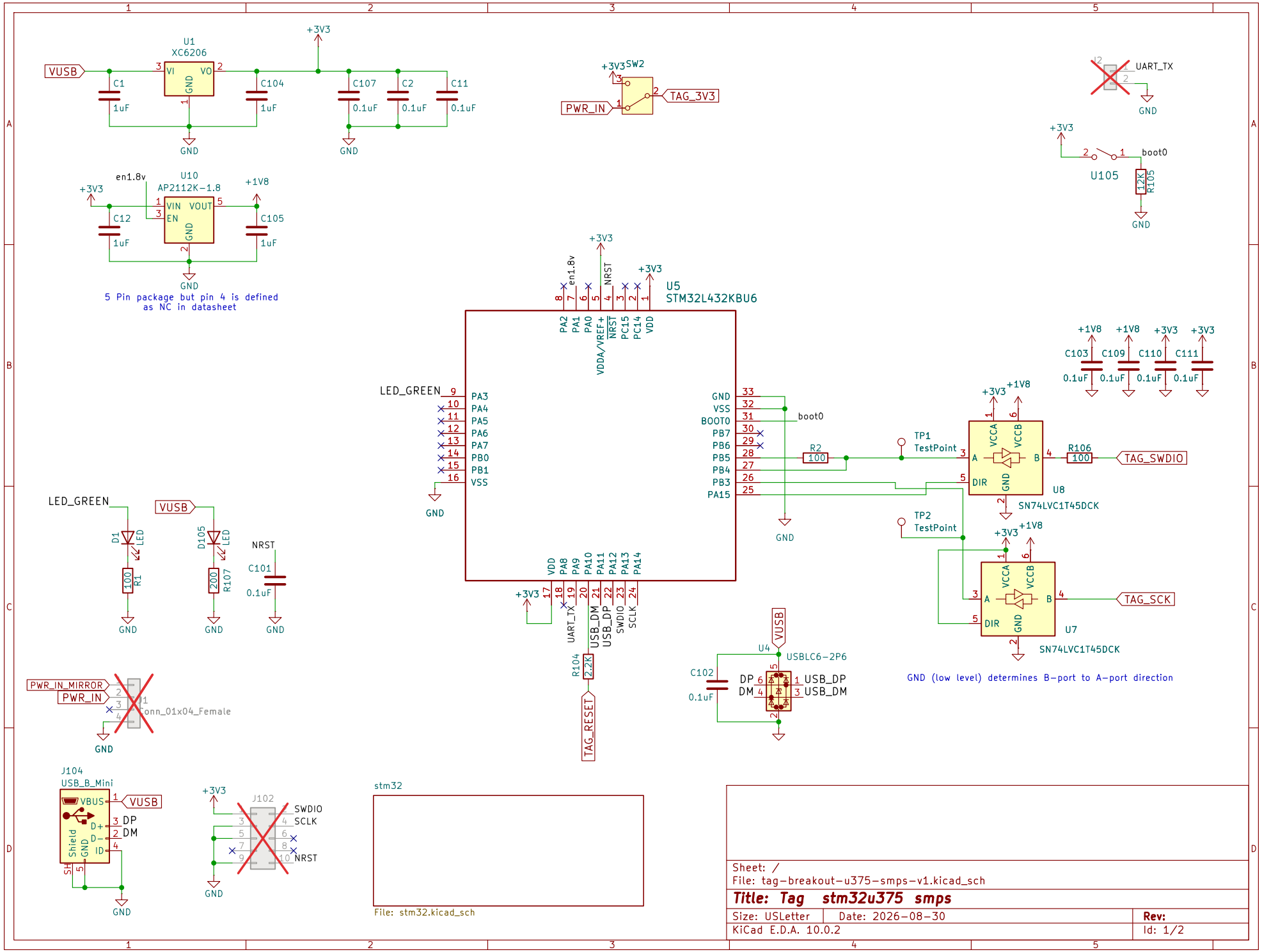

Sheet: /
File: tag-breakout-u375-smps-v1.kicad_sch

Title: Tag stm32u375 smps

Size: USLetter	Date: 2026-08-30	Rev:
KiCad E.D.A. 10.0.2		Id: 1/2

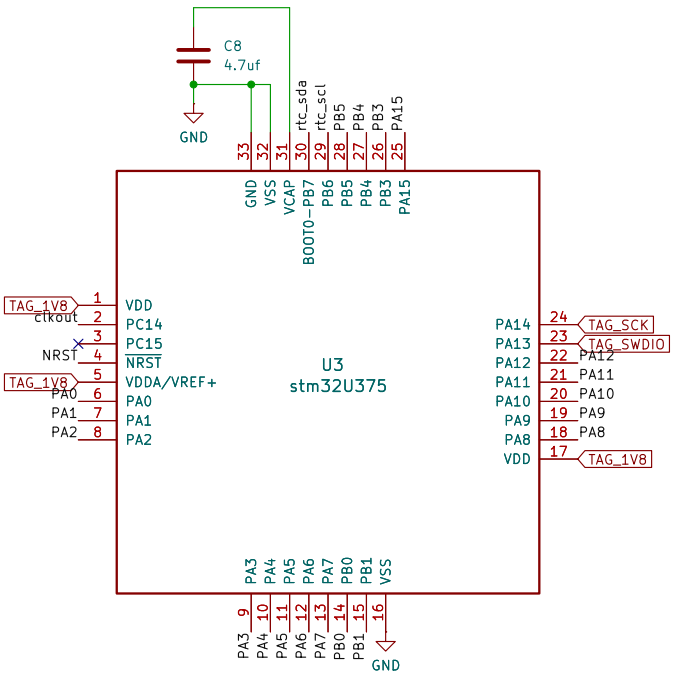

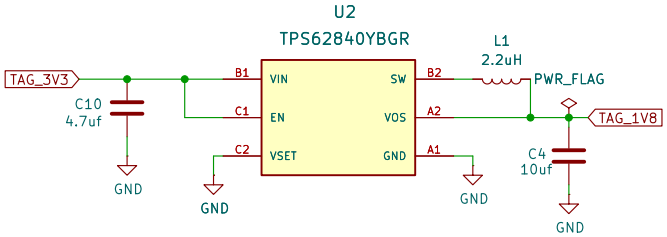

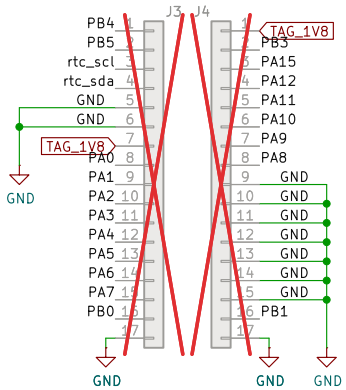

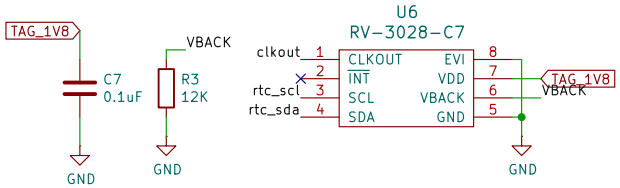

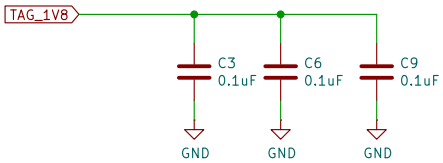

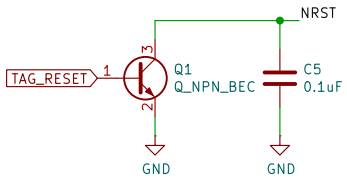

Sheet: /stm32/
File: stm32.kicad_sch

Title: Tag Breakout with stm32l432 for 1.8V core

Size: A4	Date: 2026-06-07	Rev:
KiCad E.D.A. 10.0.2		Id: 2/2