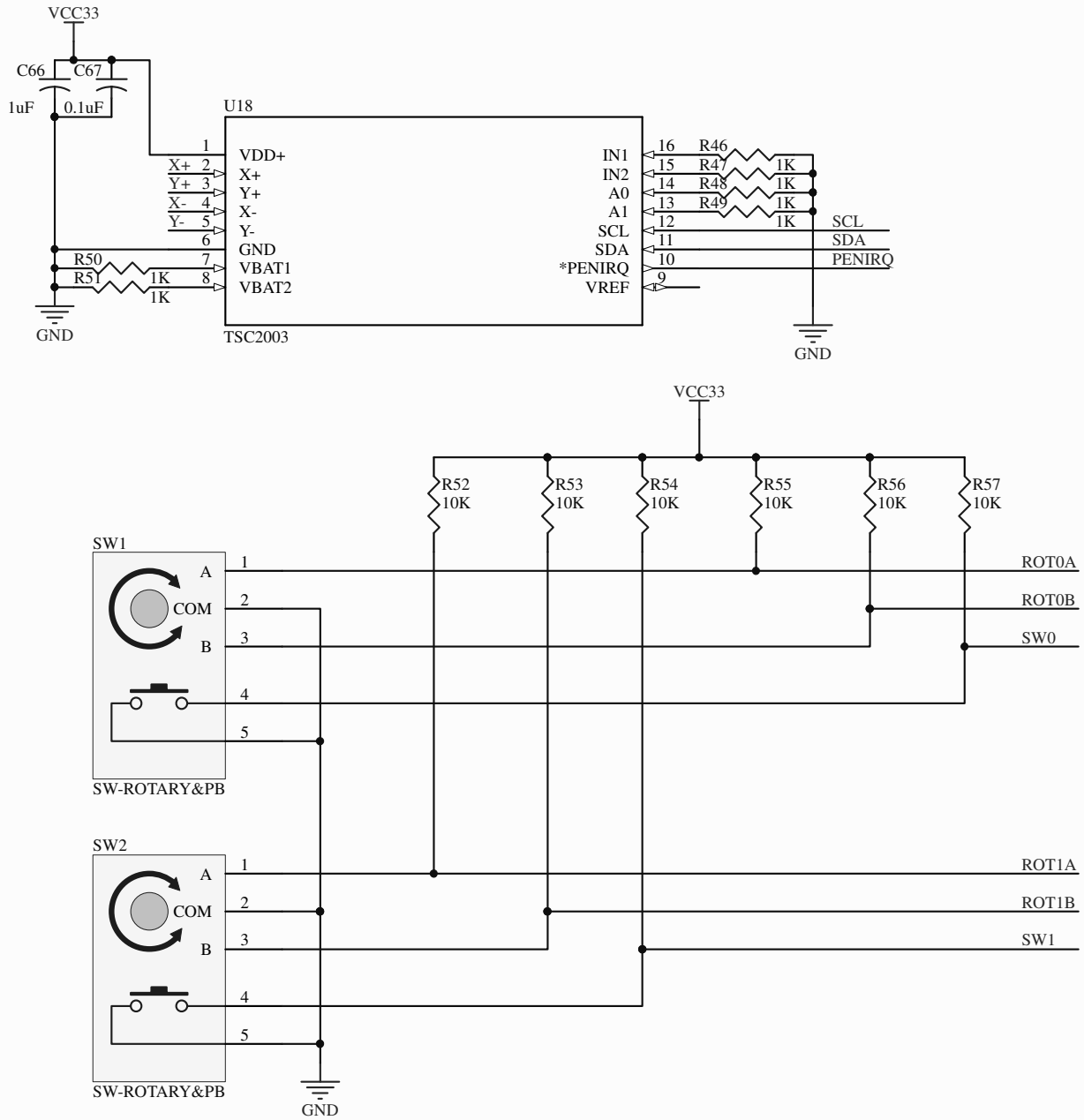

Title		
SoPC Oscilloscope - User Interface		
Size: A	Number	Revision: 1.0
Date: 6/16/2014		Sheet 5 of 5
File: C:\Users\..\user_input_old.SchDoc		Drawn By:Santiago Navonne