ELEC310 – PROJECT

Generating PWM Wave Using An Astable Multivibrator

Ahmet Taha Ekim - 79234

Hasan Can Güneş - 79268

1. Introduction

1.1 Project Overview

The objective of this project is to design, simulate, and analyze a Pulse Width Modulation (PWM) control circuit to regulate the speed of a DC motor. Unlike linear voltage regulation, which dissipates significant power as heat, PWM controls the average power delivered to a load by chopping the electrical signal into discrete pulses. This method ensures high efficiency and precise control, making it standard in industrial motor drive applications.

1.2 System Architecture

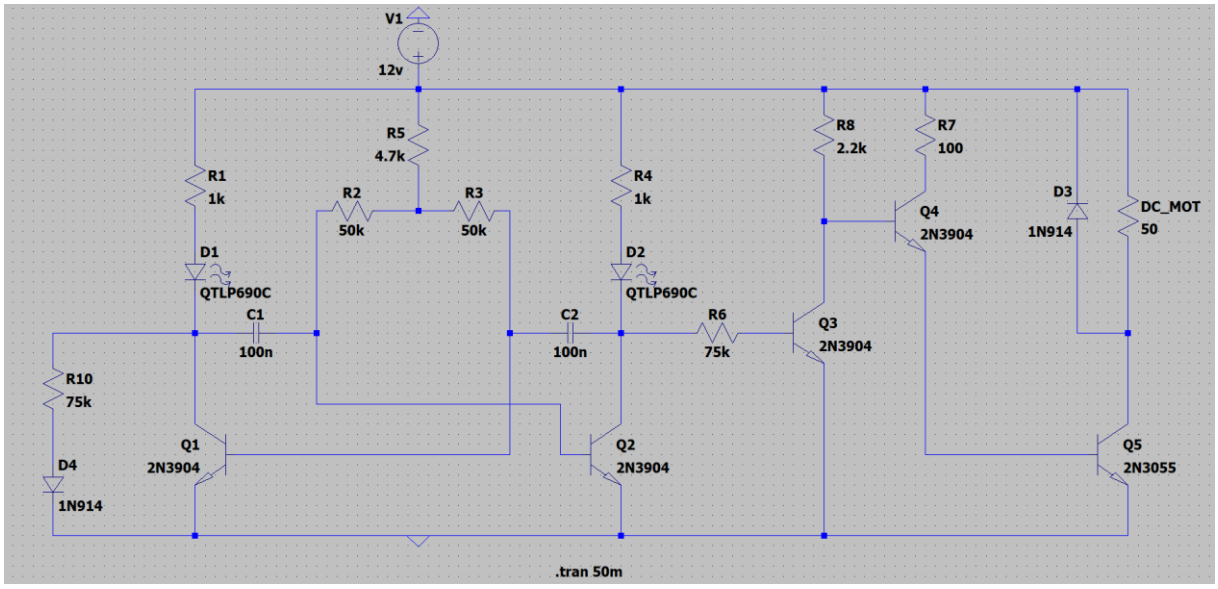

Figure 1 - Complete simulation schematic

The proposed system architecture, as visualized in the simulation schematic (Figure 1), is compartmentalized into three distinct yet interdependent functional stages to ensure signal integrity and load stability. The first stage, Pulse Generation, employs a modified Astable Multivibrator topology. This stage serves as the timing core, generating a continuous, self-sustaining square wave where the duty cycle is adjustable via asymmetric resistive charging paths. The signal is then passed to the second stage, Signal Buffering and Logic Interface, which utilizes a multi-stage transistor network (comprising Q3 and Q4). The primary function of this stage is to isolate the sensitive oscillator from the variable impedance of the motor load, thereby preventing frequency instability while simultaneously shaping the pulse for the driver. Finally, the Power Modulation Stage features a high-current power transistor (Q5) acting as the final

switch. This stage is responsible for energizing the DC motor and is equipped with a flyback diode to mitigate destructive inductive voltage spikes during the rapid switching transitions.

2. Astable Multivibrator Stage

The fundamental mechanism responsible for pulse width modulation in this design is the Astable Multivibrator, a form of relaxation oscillator configured using a cross-coupled transistor topology. As illustrated in the schematic, the circuit relies on two NPN transistors (Q1 and Q2) functioning as regenerative switches that alternate between saturation and cut-off states. Unlike a bistable multivibrator which requires external triggers to change states, this topology is unstable in both states, resulting in continuous oscillation. The state of the circuit is defined by the exponential charging and discharging of the timing capacitors C1 and C2 as seen in Figure 2.

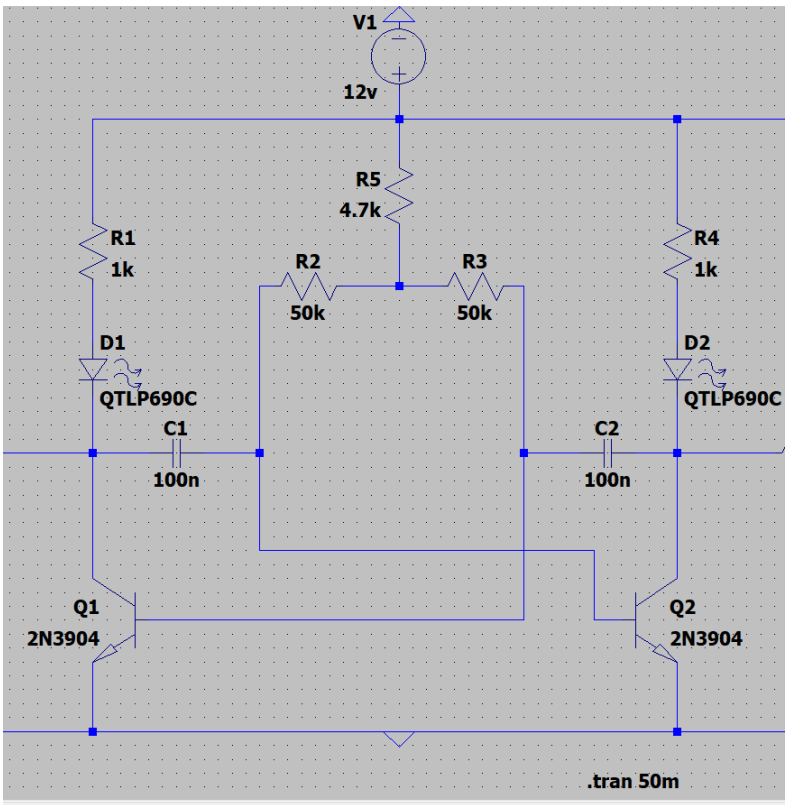

Figure 2 - Astable Multivibrator Stage

The cycle initiates when transistor Q1 enters the saturation region. At this instant, the collector potential of Q1 undergoes a precipitous voltage drop, falling from the V_{CC} down to the collector-emitter saturation voltage $V_{CE(sat)} \approx 0.2V$. This falling edge is AC coupled through capacitor C1 directly to the base of transistor Q2. According to the fundamental principle of capacitor continuity, the voltage across a capacitor cannot change instantaneously due to $dv/dt \neq \infty$. Consequently, the capacitor acts as a voltage level shifter. Since its left plate drops by approximately 12V, its right plate must drop by an equal magnitude to maintain the stored charge. This drives the base of Q2 to a deep negative potential as $V_{B2} \approx V_{CE(sat)} - V_{CC} \approx -11.8V$. This extreme reverse bias ensures that the base-emitter junction of Q2 is reverse-biased, locking Q2 firmly in the cut-off state and effectively treating it as an open switch.

Following the instantaneous switching event, the circuit enters a quasi-stable interval. During this phase, the coupling capacitor C1, having forced the base of Q2 into a deep negative potential, begins to charge towards the V_{CC} through the R_2. This charging process results in the base voltage rising exponentially from its negative peak. The duration of this specific state is critical to the circuit's operation, as it strictly defines the OFF time of the output signal for this branch. This interval is mathematically governed by the $\tau = R_2 C_1$ and persists until the base potential reaches the forward-bias threshold as $V_{BE} \approx 0.7V$, at which point Q2 conducts, and the cycle repeats.

2.2 The Timing Interval

The duration of the quasi-stable state is mathematically determined by the recovery time of the $V_B(t)$ as the timing capacitor charges from its deep negative potential toward the V_{CC}. The transition back to the conduction state is triggered precisely when $V_B(t)$ reaches the transistor's forward-bias threshold, denoted as $V_{BE(on)} \approx 0.7V$. This transient behavior is modeled using the general capacitor discharge equation:

$$V_B(t) = V_{CC} - \left(V_{CC} - V_{B(initial)}\right) \cdot e^{-t/RC}$$

By substituting the boundary conditions specifically setting $V_B(t) = V_{BE(on)}$ and solving for the time variable t, we derive the characteristic timing formula for the pulse width. Assuming a full voltage swing where $V_{B(initial)} \approx -V_{CC}$, the expression simplifies to the standard approximation for the half-period duration:

$$T_{period} = R \cdot C \cdot \ln\left(\frac{V_{CC} + V_{swing}}{V_{CC} - V_{BE(on)}}\right) \approx 0.693 \cdot R \cdot C$$

Applying this theoretical framework to the component values selected for the simulation design where R2 = R3 = 50kΩ and C1 = C2 = 100nF, the calculated duration for a single half-cycle is approximately $3.465\,ms$. Consequently, for a symmetric configuration, the total period T is derived as the sum of the two half-cycles, resulting in a theoretical oscillation frequency of approximately 144.3Hz.

2.3 The Duty Cycle Asymmetry

While a symmetric multivibrator produces a fixed %50 square wave, varying the ratio between the timing resistors R2 and R3 creates an imbalance in the charging rates of capacitors C1 and C2. In the practical implementation, this is achieved using a potentiometer which inversely adjusts the resistance values of the two timing branches.

Increasing the resistance of R2 relative to R3 extends the time constant $\tau_2 = R_2 C_1$, thereby prolonging the duration that transistor Q2 remains in the cut-off state. Conversely, the duration of the alternate state remains governed by R3. The resulting Duty Cycle, defined as the ratio of the ON time to the total period, can be expressed mathematically as,

$$D = \frac{R_2}{R_2 + R_3}$$

This relationship allows for a broad theoretical control range, spanning nearly 5% to 95%. By manipulating this duty cycle, the circuit effectively modulates the average DC voltage applied to the motor terminals.

2.4 Simulation Observations

To corroborate the theoretical design parameters, a transient analysis was conducted, yielding critical insights into the switching characteristics of the multivibrator. The collector voltage waveforms, as illustrated in Figure 3, demonstrate the distinct behavior of the transistors during state transitions. The falling edge exhibits a near vertical drop, indicative of the high-speed transition into the saturation region where the collector-emitter voltage collapses to approximately 0.2V. Conversely, the rising edge displays a characteristic exponential curvature

rather than an ideal square wave transition. This phenomenon is attributed to the charging dynamics of the coupling capacitors. When transistor Q1 switches to the cut-off state, its collector voltage cannot instantaneously rise to V_{CC}. Instead, the capacitor C1 must charge through the collector pull-up resistor R1 and the base-emitter junction of Q2. This introduces a finite rise time governed by the time constant $\tau_{rise} = R_1 \cdot C_1$. Given the component values of $R_1 = 1k\Omega$ and C1 = 100nF, this delay is calculated to be approximately $100\mu s$, matching the simulation results.

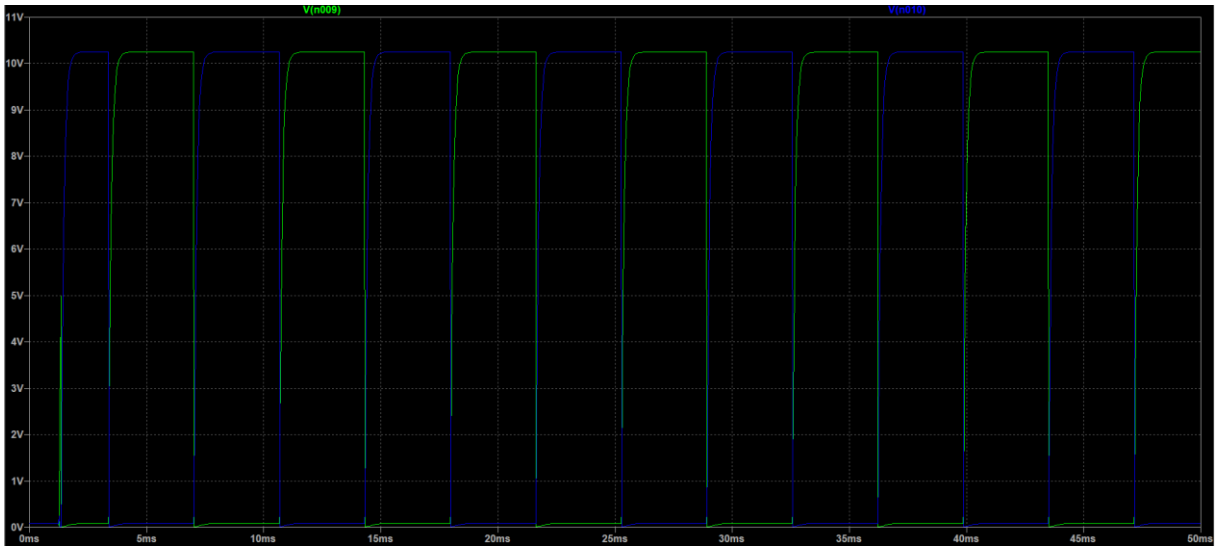

Figure 3: VC1 and VC2

Furthermore, probing the V_{B1}, V_{B2} reveals the fundamental timing mechanism of the oscillator. As depicted in Figure 4, when the opposing transistor saturates, the base voltage is instantaneously driven to a deep negative potential of approximately -11.3V. This extreme reverse bias is crucial for maintaining the cut-off state. The subsequent waveform shows an exponential ascent from this negative peak toward the forward-bias threshold of 0.7V. It is this specific recovery duration that defines the PWM period, confirming the RC timing calculations presented in the previous section.

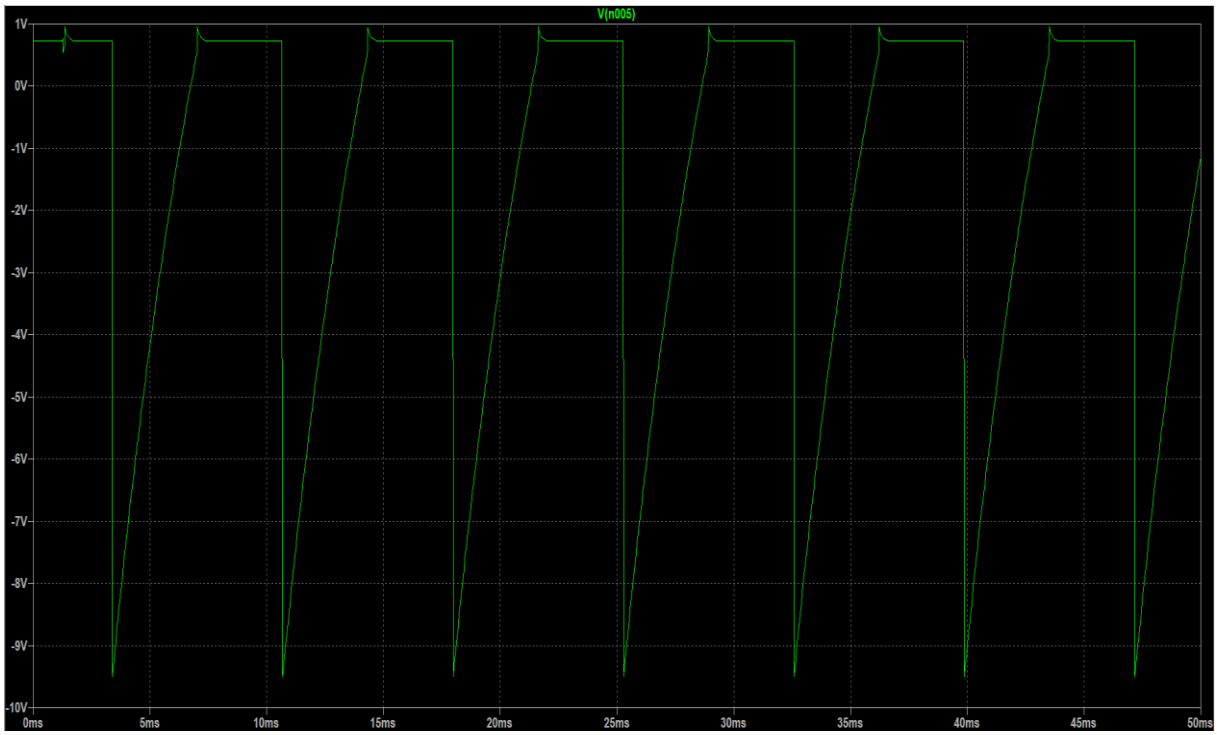

Figure 4: VB1

3. Signal Buffering and Logic Interface

The output signal derived directly from the Astable Multivibrator is high-impedance and susceptible to frequency drift if loaded heavily. Therefore, the "Signal Buffering & Logic" stage serves two critical purposes: isolating the timing core from the power stage and conditioning the signal logic for the final drive.

3.1 Logic Inversion and Isolation (Transistor Q3)

As depicted in the system schematic (Figure 1), the interface between the oscillator and the driver stage is managed by Q3 (2N3904), where the base of Q3 is connected to the collector of the oscillator transistor Q2 via a high-value current-limiting resistor, R6 (75kΩ). This high input impedance is essential for the stability of the multivibrator because it ensures that the current drawn by the buffering stage is negligible compared to the charging currents of the timing capacitor (C2), thereby preventing the variable load of the motor driver from modulating the discharge time of C2 and causing severe jitters in the PWM duty cycle. Furthermore, Q3 is configured as a Common-Emitter amplifier that inherently performs inverting operation (NOT gate logic); specifically, when Q2 is in cut-off (OFF) and its collector voltage rises, the resulting

potential drives current through R6 into the base of Q3 to force it into saturation, causing the collector voltage of Q3 to be pulled Low (≈0.2V), whereas when Q2 is in saturation (ON) and its collector voltage drops to near ground, the base of Q3 is starved of drive current and forced into cut-off, which consequently allows the collector voltage of Q3 to be pulled High via the pull-up resistor R8 (2.2kΩ).

3.2 Pre-Driver Gain Stage (Transistor Q4)

The signal leaving Q3 has sufficient voltage swing but lacks the current capacity to drive a high-power BJT directly, so transistor Q4 (2N3904) acts as an intermediate current amplifier (driver). Specifically, Q4 is arranged in an Emitter-Follower (Common Collector) topology relative to the output, where its emitter drives the base of the final power transistor. This stage also serves for logic restoration; since Q3 inverted the signal from the oscillator, the switching action of Q4 effectively restores the logic polarity relative to the oscillator's Q2 branch, ensuring that when Q3 is OFF (High Collector), Q4 is biased ON via R8. This configuration ensures that the motor is energized in synchronization with the specific phase of the oscillator.

4. Power Modulation and Load Control

The final subsystem is the Power Modulation Stage, designed to switch the high current required by the DC motor efficiently. This stage addresses the challenges of thermal dissipation and inductive transient protection.

4.1 High-Gain Power Switching (Q5 & Q4 Interaction)

The power switching is performed by Q5 (2N3055), a robust NPN power transistor, which requires a substantial base current to overcome its typically low DC current gain (β) and ensure it operates strictly as a switch to minimize power loss. The connection between Q4 and Q5 forms a cascaded driver configuration, a high-gain compound setup similar to a Darlington pair, where current flowing from the supply through R7 (100Ω) and Q4 is injected directly into the base of Q5. This configuration multiplies the effective current gain $\left(Gain_{Total} \approx \beta_{Q4} \times \beta_{Q5}\right)$, ensuring that even the weak signal from the R8 pull-up resistor is amplified sufficiently to drive Q5 into deep saturation immediately. Furthermore, the resistor R7 (100Ω) in the collector of Q4 serves a critical protective function by limiting the maximum collector current of the pre-

driver Q4, thereby preventing thermal runaway in the event that the power transistor Q5 fails or suffers a base-emitter short.

4.2 Efficiency and Thermal Analysis

The circuit utilizes Class D switching, where the power transistor Q5 alternates between two discrete states to maximize efficiency. In the ON State (Saturation), although the current I_C is high, the voltage drop $V_{CE(sat)}$ across the transistor is minimal, which ensures that the power dissipation $P = V_{CE} \times I_C$ is kept low. Conversely, in the OFF State (Cut-off), although the voltage across the transistor is high (12V), the current is zero, resulting in zero power dissipation. This binary operation is significantly more efficient than linear rheostat-based speed control, where the control element dissipates the excess voltage as waste heat, thereby allowing the system to drive high-power loads without excessive thermal stress.

4.3 Inductive Load Protection (Flyback Dynamics)

The DC motor acts as an inductive load (L) that resists sudden changes in current flow, which creates a specific hazard when Q5 switches rapidly from ON to OFF. As the current through the motor coils is abruptly interrupted, the collapsing magnetic field induces a high-voltage reverse spike (Back EMF) that can exceed the breakdown voltage of the 2N3055 transistor, potentially destroying the silicon junction. To mitigate this, as shown in Figure 1, a 1N914 diode (D3) is connected in anti-parallel with the motor; while D3 is reverse-biased and inactive during normal operation (Motor ON), it becomes forward-biased by the reverse voltage spike at the moment of switch-off. This effectively "clamps" the voltage to safe levels by providing a recirculation loop (freewheeling path) that allows the inductive energy to dissipate gradually through the motor's own internal resistance.

5. Results and Discussion

The practical performance of the PWM speed control circuit was verified through real-time oscilloscope measurements taken at the collector of Q2 (the output of the astable multivibrator). The following captures demonstrate the circuit's ability to modulate the duty cycle, which directly controls the average power delivered to the DC motor.

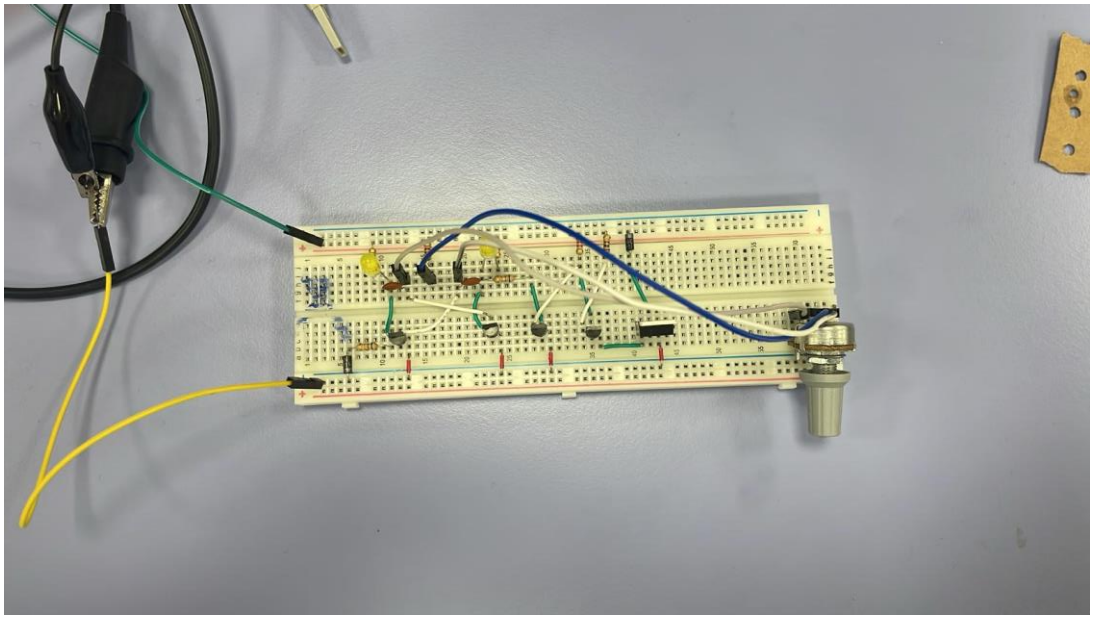

Figure 5:Physical implementation of the PWM motor control circuit on a breadboard.

Before evaluating the waveform data, the physical integrity of the system was ensured through a robust breadboard implementation. As shown in Figure X, the high-power switching components and protective elements were strategically arranged to mitigate inductive transients and thermal stress during operation. This hardware configuration served as the stable platform for capturing the precise duty cycle variations presented in the following oscilloscope measurements.

Figure 6: %50 duty cycle with R2=R3=26.14 k Ω

Initially, as shown in Image 5, the potentiometer was positioned to equalize the timing resistors at approximately 26.14kΩ on both sides. This balanced resistance resulted in a symmetrical square wave with a 50% duty cycle, providing an intermediate average voltage to the motor and validating the theoretical relationship between the RC time constants and the output pulse width.

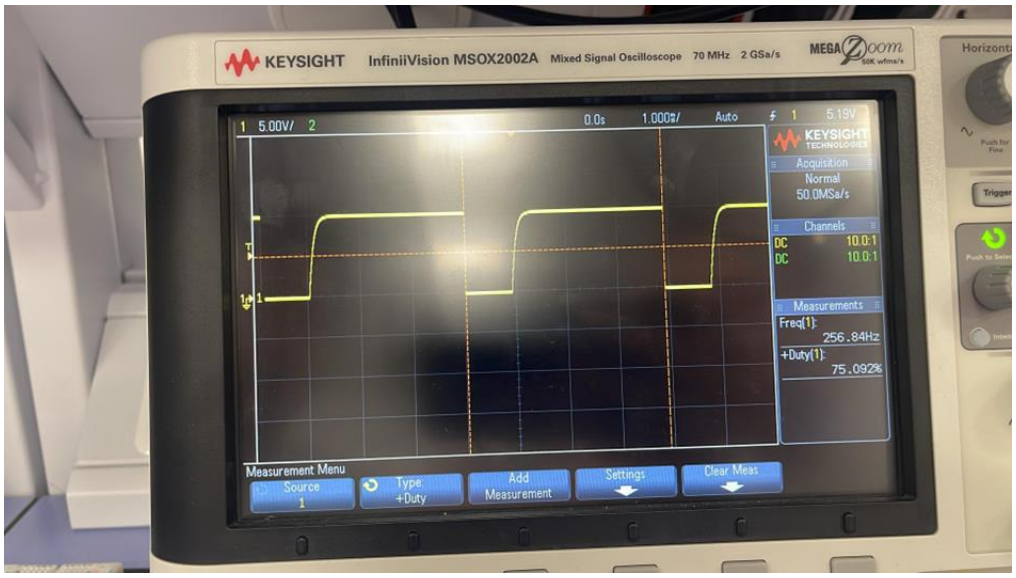

Figure 7: %75 duty cycle with R2= 49.49 kΩ and R3= 4.44 kΩ

As observed in Image 6, when the resistances were adjusted to 49.49kΩ (R2) and 4.44kΩ (R3), the duty cycle increased significantly, reaching approximately 75%. In this state, the "High" duration of the signal is dominant, ensuring that the motor receives power for the majority of the period, resulting in high-speed operation.

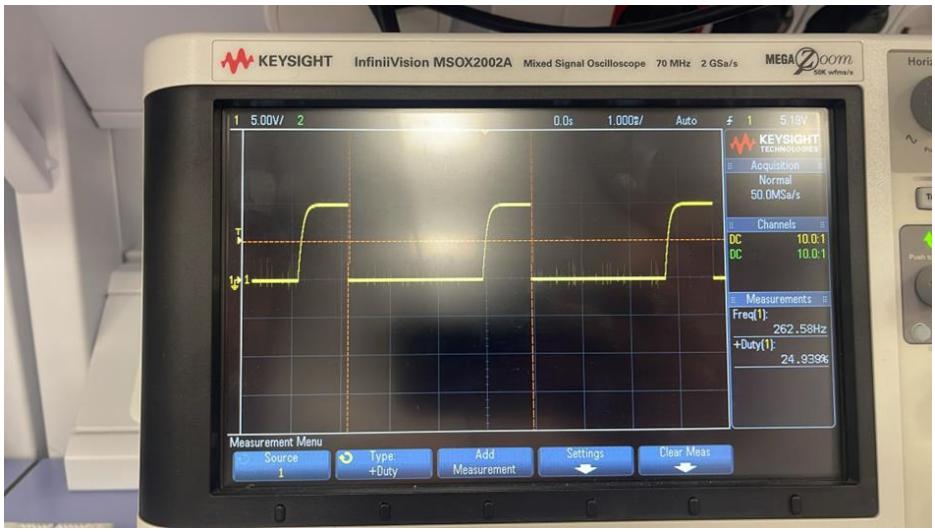

Figure 8: %25 duty cycle with R2=16.34 kΩ and R3=40.5 kΩ

In Image 7, the resistance values were modified to 16.34kΩ (R2) and 40.5kΩ (R3). This configuration produced a duty cycle of approximately 25%, where the narrow pulse width reduces the average energy delivered to the load. This confirms that the buffering stage accurately replicates the oscillator's timing, allowing the motor speed to be lowered effectively.

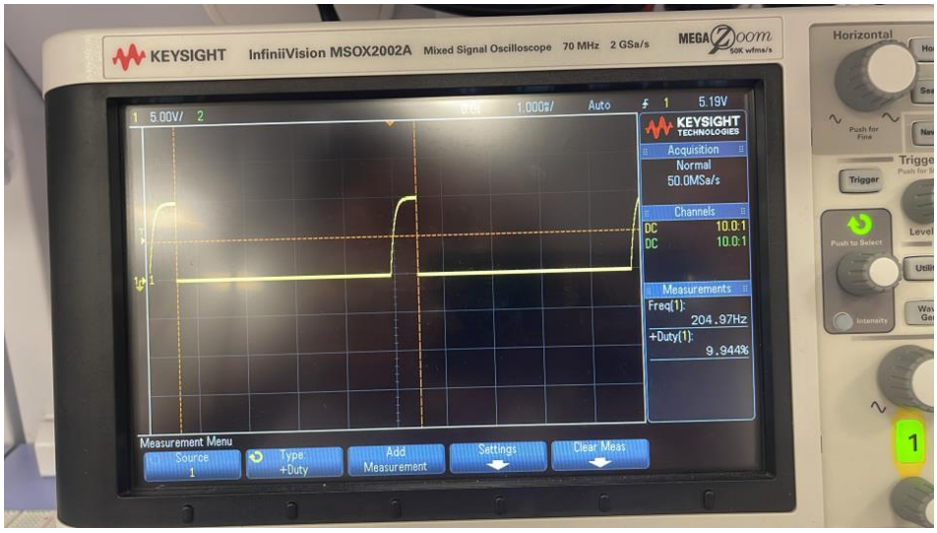

Figure 9: %10 duty cycle with R2=6.3 kΩ and R3=49.9 kΩ

Finally, as shown in Image 8, adjusting the resistors to 6.3kΩ (R2) and 49.9kΩ (R3) resulted in the minimum duty cycle being observed, approximately 10%. At this extreme setting, the power stage remains in cut-off for the vast majority of the cycle, delivering minimal power and causing the motor to rotate at its lowest possible speed before stalling.

These experimental results confirm the functionality of the chosen topology; however, the selection of BJTs over MOSFETs warrants a deeper theoretical discussion regarding design priorities. Beyond the experimental verification of the PWM signal, a critical design decision in this project was the selection of Bipolar Junction Transistors (BJTs) over Metal-Oxide-Semiconductor Field-Effect Transistors (MOSFETs) for the power switching stage, choosing the BJT topology for two primary reasons despite the widespread use of Power MOSFETs in modern industrial applications. First, BJTs offer drive circuit simplicity and lower voltage sensitivity as they turn on with a very low Base-Emitter voltage (V_{BE}) of approximately 0.7V, whereas standard Power MOSFETs typically require a Gate-Source voltage (V_{GS}) of 10V to fully saturate and achieve minimal on-state resistance; achieving such high voltage swings rapidly requires complex gate-driver circuits to overcome input capacitance, while the BJT-based Darlington configuration (Q4 driving Q5) allows for robust switching using simple current amplification without specialized high-voltage gate drivers. Second, the 2N3055

utilized in the power stage is a notoriously robust device capable of withstanding significant thermal stress compared to sensitive MOSFET gates which can be damaged by electrostatic discharge (ESD) or voltage transients during breadboard assembly and analyzing these saturation characteristics provides a more rigorous application of the analog electronic principles covered in the course curriculum. However, it is acknowledged that for battery-operated commercial applications where efficiency is paramount, a MOSFET design would be preferable to eliminate the steady-state base current loss associated with BJTs.

6. Conclusion

This project has successfully demonstrated the design, simulation, and analysis of a Pulse Width Modulation (PWM) speed controller for DC motors, utilizing a purely analog discrete component topology. The investigation yielded several critical technical insights: First, the Astable Multivibrator proved to be a robust engine for timing generation. The analysis confirmed that the duty cycle, and consequently the average load voltage, could be precisely manipulated by creating an asymmetry in the timing resistors (R_2 and R_3), validating the theoretical relationship between the RC time constants and the output pulse width. Second, the necessity of a dedicated Signal Buffering and Logic Stage was established. Simulation results highlighted that driving a power stage directly from a timing oscillator leads to frequency instability due to loading effects. The implementation of the isolation stage (Q3) and the pre-driver (Q4) successfully decoupled the sensitive timing core from the high-current demands of the motor, ensuring signal integrity. Finally, the Power Modulation Stage demonstrated the superior efficiency of Class D switching over traditional linear regulation. By operating the 2N3055 transistor in saturation and cut-off modes, power dissipation was minimized, directing the majority of energy to the mechanical load. Furthermore, the inclusion of the flyback diode (D3) was shown to be indispensable for protecting the semiconductor switches against the destructive back-EMF transients inherent to inductive loads. In summary, this circuit provides a cost-effective and energy-efficient solution for motor control, proving that complex regulation tasks can be achieved with high precision using fundamental transistor logic, without the need for digital microcontrollers.