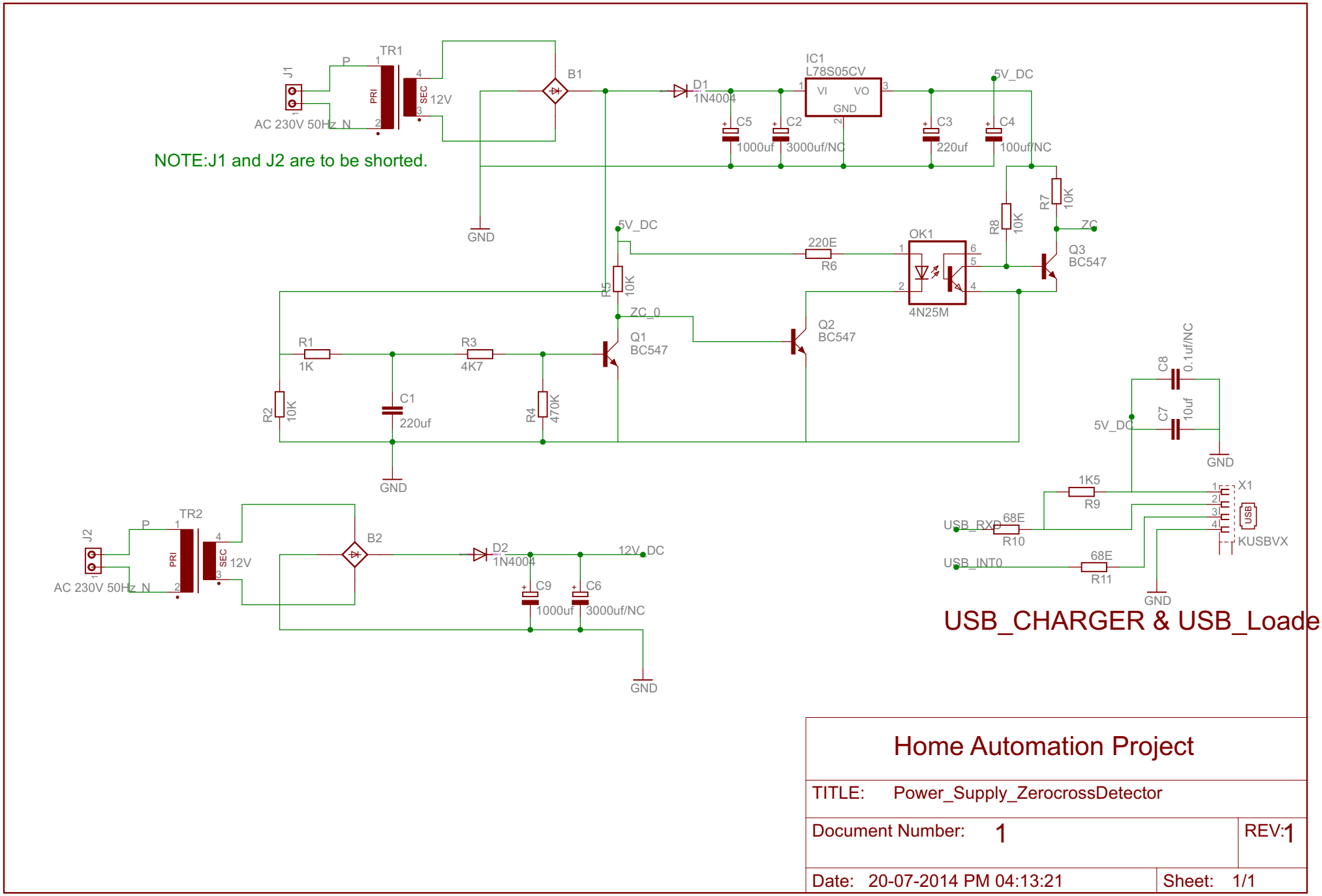

20-07-2014 PM 04:14:05 C:\Users\TAHER\Documents\eagle\HomeAutomation\Power_Supply_ZerocrossDetector.sch (Sheet: 1/1)