INTRODUCTION

How to Use This Manual

This supplement contains information for the 1994 Prelude. Refer to following shop manual for service procedures and data not included in this supplement.

Description	Code No.
PRELUDE MAINTENANCE, REPAIR and CONSTRUCTION 92	62SS000
PRELUDE SUPPLEMENT 93	62SS020

The first page of each section is marked with a black tab that lines up with one of the thumb index tabs on this page. You can quickly find the first page of each section without looking through a full table of contents. The symbols printed at the top corner of each page can also be used as a quick reference system.

Special Information

⚠ WARNING Indicates a strong possibility of severe personal injury or loss of life if instructions are not followed.

CAUTION: Indicates a possibility of personal injury or equipment damage if instructions are not followed.

NOTE: Gives helpful information.

CAUTION: Detailed descriptions of *standard workshop* procedures, safety principles and service operations are not included. Please note that this manual contains warnings and cautions against some specific service methods which could cause PERSONAL INJURY, damage a vehicle or make it unsafe. Please understand that these warnings cannot cover all conceivable ways in which service, whether or not recommended by HONDA, might be done, or of the possible hazardous consequences of every conceivable way, nor could HONDA investigate all such ways. Anyone using service procedures or tools, whether or not recommended by HONDA, *must satisfy himself thoroughly* that neither personal safety nor vehicle safety will be jeopardized.

All information contained in this manual is based on the latest product information available at the time of printing. We reserve the right to make changes at any time without notice. No part of this publication may be reproduced, stored in retrieval system, or transmitted, in any form by any means, electronic, mechanical, photocopying, recording, or otherwise, without the prior written permission of the publisher. This includes text, figures and tables.

marked sections are not included in this manual.
As sections with * include SRS components; special precautions are required, when servicing.

First Edition 11/93 210 pages
All Rights Reserved

HONDA MOTOR CO., LTD.
Service Publication Office

*General Info
Special Tools
Specifications
Maintenance
Engine
Cooling
Fuel and Emissions
Transaxle
*Steering
Suspension
Brakes (Including ABS)
*Body
*Heater and Air Conditioning
*Electrical (Including SRS)

Outline of Model Changes

ITEM	DESCRIPTION	93 MODEL	94 MODEL	REFERENCE SECTION
Engine	Added • H22A2 engine	○		——
	Added • H22A1 engine (KQ model) • Recommended engine oil SH grade		○	8
PGM-FI	Added • H22A2 engine	○		——
	Added • H22A1 engine (KQ model) Changed • Main wire harness		○	11
Manual Transmission	Added • M2F5 manual transmission for H22A2 engine	○		——
Automatic Transmission	Modified • Circuit diagram Changed • Reverse idler gear shaft and holder • Main valve body assembly • Secondary shaft assembly • Clutch discs and pistons • Throttle control cable inspection and adjustment Discontinued • Right side cover protector		○	14
Steering (4WS)	Changed • Blinking interval of problem code indication patterns Deleted • No. 70 (IG1) of problem code		○	17
Body	Changed • Center console • Door construction Added • Rear emblem • Trunk spoiler with high mount brake light (KQ model VTEC)		○	20
Air Conditioning	Changed • Refrigerant: Refrigerant HFC-134a (R-134a)		○	22

ITEM	DESCRIPTION	93 MODEL	94 MODEL	REFERENCE SECTION
Electrical	Added • H22A2 engine • Inter lock system (KQ model) • Power door lock actuator (KQ model) • SRS type I Changed • Power supply circuit • Dash lights brightness control unit (European model) • Integrated control unit (KY model)	○		——
	Added • H22A1 engine (KQ model) • New indicator light (some models) • Ceiling/Spot light (KQ, KY models) • SRS type III Changed • Shift lever position indicator (luminescent gauges) • Inter lock system connector (KQ model) • Brake/High mount brake light failure sensors • Turn signal/Hazard flasher system circuits • Dash lights brightness control controller locations (some models) • Power windows driver's switch assembly • Head light adjuster switch location • Seat heater switch location • Power mirror switch location • Headlight washer switch location Adopted • New main gauge (luminescent gauges)		○	23

General Information

Chassis and Engine Numbers 1-2
Identification Number Locations 1-4
Warning/Caution Label Locations 1-5

Chassis and Engine Numbers

European Model

Vehicle Identification Number

JHMBB11700C100001

Manufacturer, Make and Type of Vehicle
- JHM: HONDA MOTOR CO., LTD. HONDA Passenger car

Line, Body and Engine Type
- BB1: Prelude/H22A2
- BB2: Prelude/H23A2
- BB3: Prelude/F20A4

Body Type and Transmission Type
- 1: 2-door Coupe/5-speed Manual
- 2: 2-door Coupe/4-speed Automatic

Vehicle Grade (Series)
- 4: 2.0i
- 5: 2.3i
- 6: 2.3i with driver's and a front passenger's SRS airbag system
- 7: 2.2i-VTEC
- 8: 2.2i-VTEC with driver's and a front passenger's SRS airbag system

Fixed Code

Auxiliary Number

Factory Code
- C: Saitama Factory in Japan (Sayama)

Model Year
- 1: 1994 (BB1)
- 2: 1994 (BB2, BB3)

Serial Number

Engine Number

F20A4-9300001

Engine Type
- F20A4: 2.0 ℓ SOHC Sequential Multi-port Fuel-injected engine with catalytic converter
- H22A2: 2.2 ℓ DOHC VTEC Sequential Multi-port Fuel-injected engine with catalytic converter
- H23A2: 2.3 ℓ DOHC Sequential Multi-port Fuel-injected engine with catalytic converter

Serial Number
- F20A4: 9300001 ~
- H22A2: 2000001 ~
- H23A2: 3000001 ~

Transmission Number

M2F5-2000001

Transmission Type
- M2F5: Manual with H22A2 engine
- M2J4: Manual with F20A4 engine
- M2K4: Manual with H23A2 engine
- MP1A: Automatic

Serial Number
- M2F5: 2000001 ~
- Except M2F5: 3000001 ~

Except European Model

Vehicle Identification Number

JHMBA81400C200001

Manufacturer, Make and Type of Vehicle
JHM: HONDA MOTOR CO., LTD. HONDA, Passenger car

Line, Body and Engine Type
BA8: Prelude/F22A1, F22A2
BB1: Prelude/H22A1
BB2: Prelude/H23A1

Body Type and Transmission Type
1: 2-door Coupe/5-speed Manual
2: 2-door Coupe/4-speed Automatic

Vehicle Grade (Series)
4: S (KQ), Si (KT, KY)
5: Si (KQ) and Si-SPECIAL (KQ)
7: VTi-R (KQ)

Fixed Code

Auxiliary Number

Factory Code
C: Saitama Factory in Japan (Sayama)

Model Year
1: 1994 (BB1)
2: 1994 (BA8, BB2)

Serial Number

Engine Number

F22A1-9390001

Engine Type
F22A1: 2.2 ℓ SOHC Sequential Multi-port Fuel-injected engine with catalytic converter (KQ)
F22A2: 2.2 ℓ SOHC Sequential Multi-port Fuel-injected engine without catalytic converter (KT/KY)
H22A1: 2.2 ℓ DOHC VTEC Sequential Multi-port Fuel-injected engine with catalytic converter (KQ)
H23A1: 2.3 ℓ DOHC Sequential Multi-port Fuel-injected engine with catalytic converter (KQ)

Serial Number
F22A1: 9390001 ~
F22A2: 9300001 ~
H22A1: 1900001 ~
H23A1: 3800001 ~

Transmission Number

M2C4-3000001

Transmission Type
M2C4: Manual with F22A2 engine (KT/KY)
M2F5: Manual with H22A1 engine (KQ)
M2J4: Manual with F22A1 engine (KQ)
M2K4: Manual with H23A1 engine (KQ)
MP1A: Automatic

Serial Number
M2F5: 2000001 ~
Except M2F5: 3000001 ~

Identification Number Locations

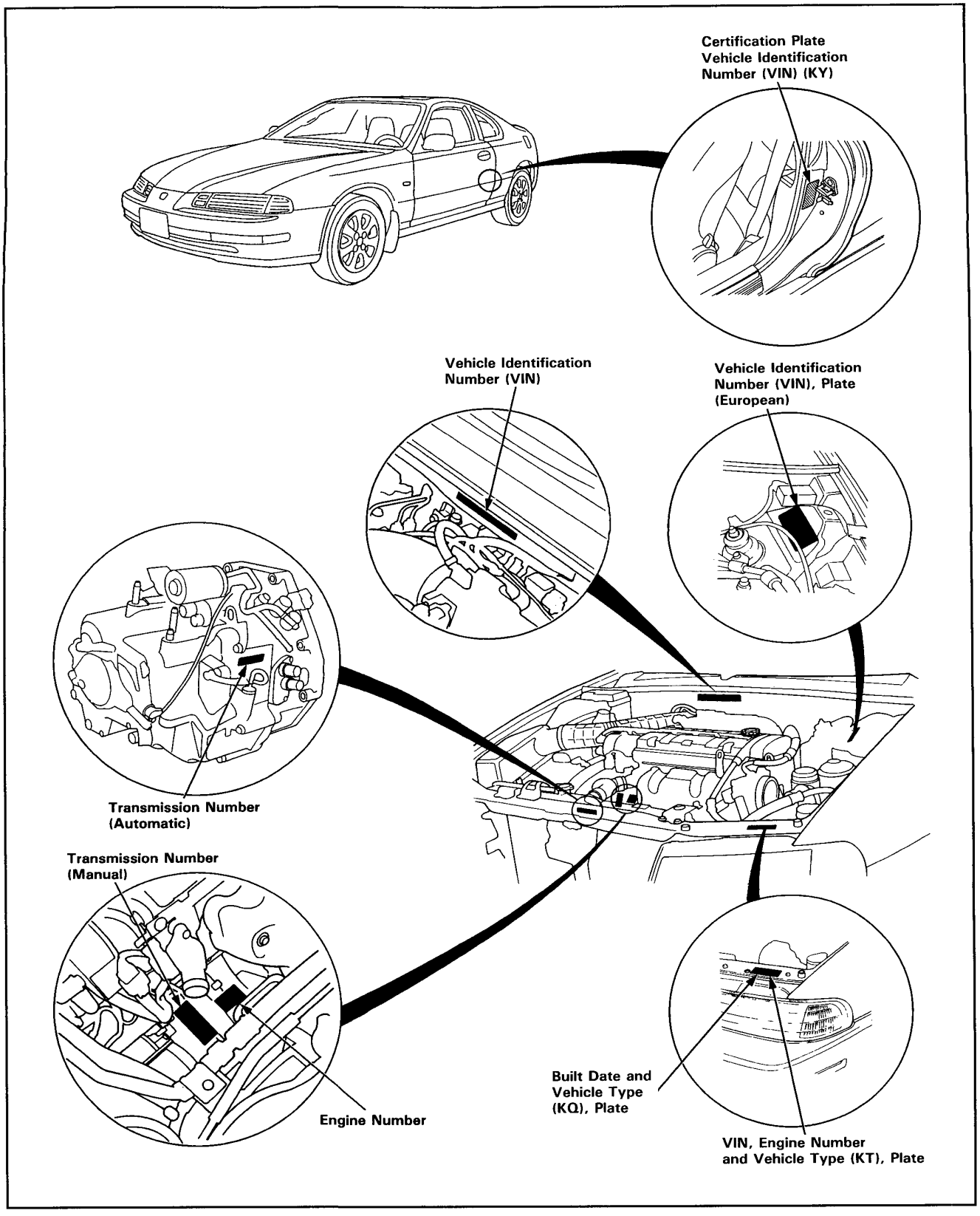

SRS Airbag System Type III:

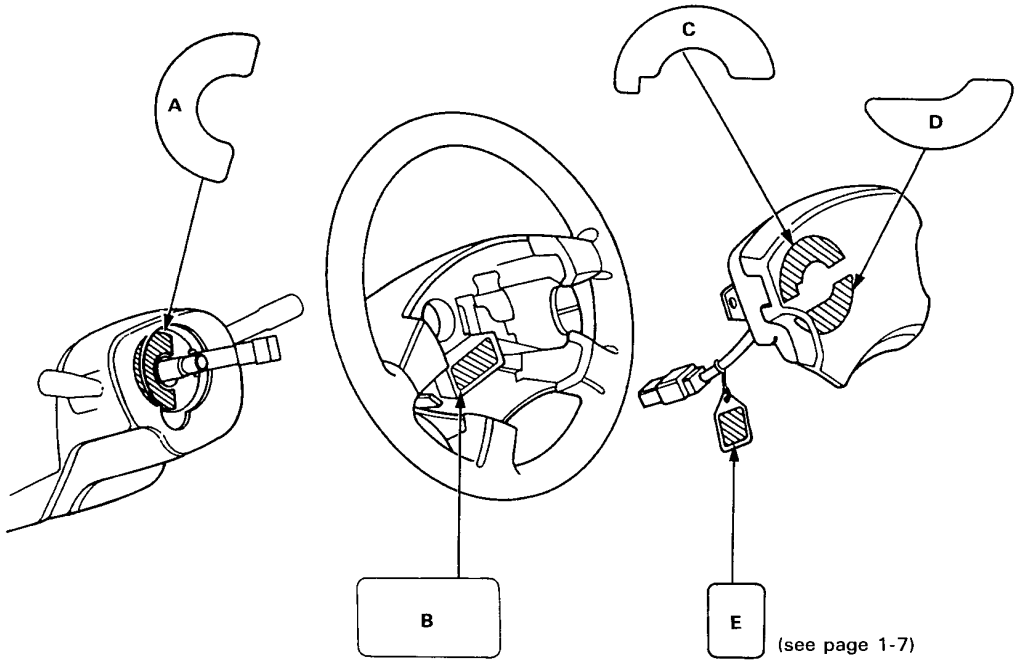

(see page 1-7)

A: CABLE REEL CAUTION A

SRS
REFER TO SERVICE (SHOP) MANUAL FOR DETAILED INSTRUCTIONS.

POUR LES INSTRUCTIONS DETAILL'EES, SE REPORTER AU MANUEL DE REPARATIONS.

取扱い、保管はホンダサービスマニュアルを参照してください。

AUSF HRLICHE ANMEISUNGEN SIND DEM ZU ENTINEMEN.

RAAD PLEEG HET WERKPLAATSHANDBOEK VOOR NADERE AANWIJZINGEN.

B: STEERING WHEEL WARNING

WARNING SRS
- REFER TO THE SHOP MANUAL
- SE REPORTER AU MANUEL D'ATELIER.
- WERKSTATT HANDBUCH LESEN.
- LEES HET WERKPLAATSHANDBOEK.

C: DRIVER MODULE DANGER

SRS
- DANGER
  EXPLOSIVE/FLAMMABLE
  POISON
  REFER TO SHOP MANUAL.
- DANGER
  EXPLOSIF ET INFLAMMABLE
  POISON
  SE REPORTER AU MANUEL D'ATELIER.
- GEFAHR
  EXPLOSIV/ENTZUNDBAR
  GIFT
  WERKSTATTHANDBUCH LESEN.
- GEVAAR
  EXPLOSIEGEVAAR/BRANDBAAR
  GIFTIG
  LEES HET WERKPLAATSHANDBOEK.

D: DRIVER MODULE WARNING

WARNING SRS
- REFER TO THE SHOP MANUAL.
- SE REPORTER AU MANUEL D'ATELIER.
- WERKSTATTHANDBUCH LESEN.
- LEES HET WERKPLAATSHANDBOEK.

(cont'd)

Warning/Caution Label Locations

(cont'd)

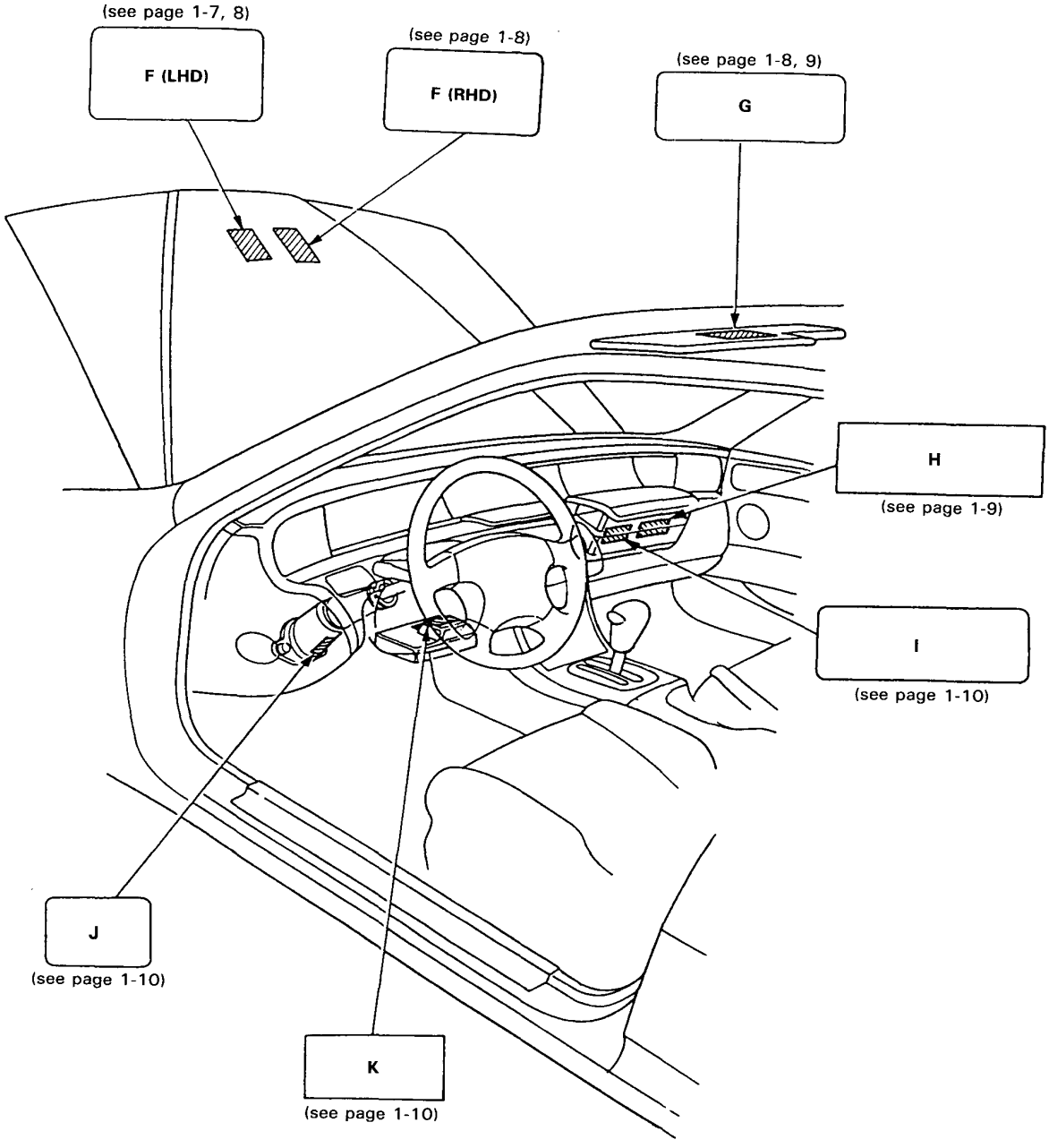

E: BAM INFLATOR LABEL (European Model only)
Morton International, Inc. manufactured inflator:

AIR BAG GAS GENERATOR UT11600
MORTON INTERNATIONAL, INC.
OGDEN UT. USA
HERSTELLUNGSJAHR: 1992
EINFÜHRER: HONDA DEUTSCHLAND
GMBH/OFFENBACH
BAM PT1-0388

DER GASGENERATOR DARF NUR FÜR INSASSEN-RÜCKHALTESYSTEME MIT LUFTSACK IN KRAFTFAHRZEUGE MONTIERT WERDEN.
DIE MONTAGE UND DEMONTAGE DES GASGENERATORS DARF NUR VON DAFÜR GESCHULTEM PERSONAL VORGENOMMEN WERDEN.

CAUTION CONTAINS FLAMMABLE SOLIDS US DOT-E-8214	THE GAS GENERATOR SHOULD ONLY BE INSTALLED IN VEHICLES EQUIPPED WITH THE AIRBAG SYSTEM. THE GAS GENERATOR IS TO BE INSTALLED AND/OR DISASSEMBLED ONLY BY TRAINED PERSONNEL.

ATTENTION CONTENT DE SOLIDES FLAMMABLE US DOT-E-8214	LE GENERATEUR DE GAZ NE PEUT ETRE INSTALLE QUE SUR DES VEHICULES EQUIPES D'UN SYSTEME AIRBAG. LE MONTAGE ET LE DEMONTAGE DU GENERATEUR DE GAZ NE PEUT ETRE EFFECTUE QUE PAR UN PERSONNEL QUALIFIE.

NIPPON KOKI manufactured inflator

AIR BAG GAS GENERATOR NK8
NIPPON KOKI, SHIRAKAWA JAPAN
HERSTELLUNGSJAHR: 1991
EINFÜHRER: HONDA DEUTSCHLAND
GMBH/OFFENBACH
BAM PT1-0379

DER GASGENERATOR DARF NUR FÜR INSASSEN-RÜCKHALTESYSTEME MIT LUFTSACK IN KRAFTFAHRZEUGE MONTIERT WERDEN.
DIE MONTAGE UND DEMONTAGE DES GASGENERATORS DARF NUR VON DAFÜR GESCHULTEM PERSONAL VORGENOMMEN WERDEN.

CAUTION CONTAINS FLAMMABLE SOLIDS	THE GAS GENERATOR SHOULD ONLY BE INSTALLED IN VEHICLES EQUIPPED WITH THE AIRBAG SYSTEM. THE GAS GENERATOR IS TO BE INSTALLED AND/OR DISASSEMBLED ONLY BY TRAINED PERSONNEL.

ATTENTION CONTENT DE SOLIDES FLAMMABLES	LE GENERATEUR DE GAZ NE PEUT ETRE INSTALLE QUE SUR DES VEHICULES EQUIPES D'UN SYSTEME AIRBAG. LE MONTAGE ET LE DEMONTAGE DU GENERATEUR DE GAZ NE PEUT ETRE EFFECTUE QUE PAR UN PERSONNEL QUALIFIE.

F: SRS WARNING (HOOD)
(KS model)

WARNING SRS
THIS VEHICLE IS EQUIPPED WITH AN AIRBAG SYSTEM AS A SUPPLEMENTAL RESTRAINT SYSTEM. (SRS)
ALL S.R.S. ELECTRICAL WIRING AND CONNECTORS ARE COLORED YELLOW.
DO NOT USE ELECTRICAL TEST EQUIPMENT ON THESE CIRCUITS.
TAMPERING WITH OR DISCONNECTING THE S.R.S. WIRING COULD RESULT IN ACCIDENTAL FIRING OF THE INFLATOR OR MAKE THE SYSTEM INOPERATIVE, WHICH MAY RESULT IN SERIOUS INJURY.

VARNING SRS
DETTA FORDON HAR EN LUFTKUDDE FÖR FÖRARSÄTET SOM ETT KOMPLETTERANDE SKYDDSSYSTEM (SRS). SAMTLIGA ELLEDNINGAR OCH KONTAKTER I SRS-SYSTEMET ÄR GULFÄRGADE. ANVÄND INTE ELEKTRISK PROVUTRUSTNING FÖR DESSA KRETSAR. OM DU ÄNDRAR ELLER LOSSAR EN SRS-LEDNING KAN DET RESULTERA I EN OAVSIKTLIG UTLÖSNING AV TRYCKPUMPEN ELLER GÖRA ATT SYSTEMET SLUTAR FUNGERA. DÅ KAN EN ALLVARLIG OLYCKA UPPSTÅ.

VAROITUS SRS
TÄSSÄ AUTOSSA ON YLIMÄÄRÄISENÄ TUKIJÄRJESTELMÄNÄ AJAJAN ILMATYYNY. (SRS)
KAIKKI SRS-SÄHKÖJOHDOT JA -LIITTIMET OVAT KELTAISET.
ÄLÄ KÄYTÄ SÄHKÖKOELAITTEITA NÄISSÄ VIRTAPIIREISAÄ. SRS-JOHTOJEN TUKKEAMINEN TAI IRROTTAMINEN SAATTAA SYTYTTÄÄ VAHINGOSSA PUMPUN TAI TEHDÄ JÄRJESTELMÄN KÄYTTÖKELVOTTOMAKSI.
TÄSTÄ-TAAS SAATTAA AIHEUTUA VAKAVIA VAURIOITA.

(cont'd)

Warning/Caution Label Locations

(cont'd)

F: SRS WARNING (HOOD)
(Except KS model)

WARNING: SRS
THIS VEHICLE IS EQUIPPED WITH AN AIRBAG SYSTEM AS A SUPPLEMENTAL RESTRAINT SYSTEM. (SRS)
ALL S.R.S. ELECTRICAL WIRING AND CONNECTORS ARE COLORED YELLOW.
DO NOT USE ELECTRICAL TEST EQUIPMENT ON THESE CIRCUITS.
TAMPERING WITH OR DISCONNECTING THE S.R.S. WIRING COULD RESULT IN ACCIDENTAL FIRING OF THE INFLATOR OR MAKE THE SYSTEM INOPERATIVE WHICH MAY RESULT IN SERIOUS INJURY.

ATTENTION SRS
CE VEHICULE EST EQUIPE D'UN COUSSIN D'AIR DU COTE CONDUCTEUR QUI CONSTITUE UN SYSTEME DE RETEUNUE COMPLEMENTAIRE (S.R.S.).
TOUS LES FILS ET CONNECTEURS ELECTRIQUES DU SYSTEME DE RETENUE COMPLEMENTAIRE (S.R.S.) SONT DE COULEUR JAUNE. N'UTILISEZ PAS UN EQUIPMENT D'ESSAIS ELECTRIQUES SUR CES CIRCUITS. NE TOUCHEZ PAS ET NE DEBRANCHEZ PAS LES FILS DU SYSTEME S.R.S. CAR CECI POURRAIT DE TRADUIRE PAR LE DECLENCHEMENT ACCIDENTEL DU GONFLEUR OU RENDRE LE SYSTEME INOPERANT ET VOUS EXPOSER AINSI A DE GRAVES BLESSURES.

WARNUNG SRS
DIESES FAHRZEUG IST MIT EINEM FAHRER-AIRBAG (SRS) ALS ZUSÄTZLICHEM RÜCKHALTESYSTEM AUSGERÜSTET.
ALLE ELEKTRISCHEN KABEL, SOWIE DIE ZUGEHÖRIGEN STECKVERBINDER DES S.R.S.-SYSTEMS SIND IN GELBER FARBE AUSGEFÜHRT.
KEINE ELEKTRISCHEN PRÜFGERÄTE AN DIE S.R.S.-VERKABELUNG ANSCHLIEBEN.
VERÄNDERN ODER UNTERBRECHEN DER S.R.S.-VERKABELUNG KANN UNKONTROLLIERTES ZÜNDEN DES GASGENERATORS AUSLÖSEN. ODER DAS SYSTEM AUBER FUNKTION SETZEN WAS ZU ERNSTHAFTEN VERLETZUNGEN FÜHREN KANN.

WAARSCHUWING SRS
DIT VOERTUIG IS UITGERUST MET EEN LUCHTKUSSEN AAN DE BESTUURDERSKANT ALS EXTRA BESCHERMING (S.R.S.).
ALLE ELEKTRISCHE LEIDINGEN EN AANSLUITINGEN VAN DE S.R.S. ZIJN GEEL GEKLEURD. GEBRUIK GEEN ELEKTRISCHE TESTAPPARATUUR VOOR DEZE CIRCUITS. KNOEIEN MET OF LOSKOPPELEN VAN DE S.R.S. LEIDINGEN KAN LEIDEN TOT BRAND IN DE VULINRICHTING OF TOT UITSCHAKELEN VAN HET SYSTEEM DIT KAN TOT ERNSTIGE ONGELUKKEN LEIDEN.

G: DRIVER INFORMATION (SUNVISOR)
(Except KS, KE models)

SRS ALWAYS WEAR YOUR SEAT BELT
- THIS CAR IS EQUIPPED WITH A DRIVER AIRBAG AND FRONT SEAT PASSENGER AIRBAG AS A SUPPLEMENTAL RESTRAINT SYSTEM (S.R.S.).
- IT IS DESIGNED TO SUPPLEMENT THE SEAT BELT.
- IF YOUR SRS INDICATOR LIGHTS WHILE DRIVING SEE YOUR AUTHORIZED HONDA DEALER.

SRS ATTACHEZ TOUJOURS VOTRE CEINTURE
- CE VEHICULE EST EQUIPE D'UN COUSSIN D'AIR POUR LE PASSAGER AVANT, QUI CONSTITUENT UN SYSTEME DE RETENUE COMPLEMENTAIRE (S.R.S.)
- CE COUSSIN D'AIR COMPLETE LA FONCTION DE LA CEINTURE DE CECURITE.
- SI LE TEMOIN SRS S'ALLUME PENDANT LA CONDUITE, ADRESSEZ-VOUS A VOTRE CONCESSIONNAIRE HONDA OFFICIEL.

SRS SICHERHEITSGURTE BEI JEDER FAHRT ANLEGEN
- DIESES FAHRZEUG BESITZT JE EINEN AIRBAG FÜR FAHRER UND BEIFAHRER ALS ZUSÄTZLICHES RÜCKHALTESYSTEM (S.R.S.).
- DAS RÜCKHALTESYSTEM IST EINE ERGÄNZUNG ZUM SICHERHEITSGURT.
- SOLLTE WAHREND DER FAHRT DIE SRS-KONTROLLEUCHTE AUFLEUCHTEN SUCHEN SIE BITTE UMGEHEND EINEN HONDA-HÄNDLER SUF.

SRS DRAAG ALTIJD UW VEILIGHEIDSGORDEL
- DIT VOERTUNG IS UITGERUST MET AIRBAG (SRS) AAN BESTUURDERSZIJDE EN PASSAGIERSZIJDE VOOR EXTRA VEILIGHEID.
- ONTWORPEN ALS EXTRA BESCHERMING NAAST DE VEILIGHEIDSGORDELS.
- ALS HET SRS-WAARSCHUWINGSLAMPJE GAAT BRANDEN ONDER HET RIJDEN, NEEM DAN KONTAKT OP MET EEN HONDA DEALER.

(KE model)

SRS ALWAYS WEAR YOUR SEAT BELT

- THIS CAR IS EQUIPPED WITH A DRIVER AIRBAG AND FRONT SEAT PASSENGER AIRBAG AS A SUPPLEMENTAL RESTRAINT SYSTEM (S.R.S.).
- IT IS DESIGNED TO SUPPLEMENT THE SEAT BELT.
- IF YOUR SRS INDICATOR LIGHTS WHILE DRIVING SEE YOUR AUTHORIZED HONDA DEALER.

(KS model)

SRS ALWAYS WEAR YOUR SEAT BELT

- THIS CAR IS EQUIPPED WITH A DRIVER AIRBAG AND FRONT SEAT PASSENGER AIRBAG AS A SUPPLEMENTAL RESTRAINT SYSTEM (S.R.S.).
- IT IS DESIGNED TO SUPPLEMENT THE SEAT BELT.
- IF YOUR SRS INDICATOR LIGHTS WHILE DRIVING SEE YOUR AUTHORIZED HONDA DEALER.

SRS ANVÄND ALLTID BILBÄLTET

- DETTA FORDON ÄR FÖRSETT MED EN LUFTKUODDE FÖR FÖRARSÄTET OCH EN LUFTKUDDE FÖR PASSAGERSÄTET FRAM SOM ETT KOMPLEMENTERANDE SKYDDSSYSTEM (S.R.S.).
- DET ÄR ÄMNAT ATT KOMPLEMENTERA BILBÄLTET.
- OM SRS-INDIKATORN TÄNDS UNDER KÖRNING SKALL DU KONTAKTA EN AUKTORISERAD HONDA-ÄTERFÖRSÄLJARE.

SRS KÄYTÄ AINA TURVAVÖITÄ

- TÄMÄ AUTO ON VARUSTETTU AJAJAN ILMATYYNYLLÄ JA ETUMATKUSTAJAN ILMATYYNYLLÄ. JOTKA TOIMIVAT YLMÄÄRÄISENÄ TUKIJÄRJESTELMÄNÄ (S.R.S.).
- SE ON SUUNNITELTU TÄYDENTÄMÄÄN TURVAVYÖTÄ.
- JOS SRS-MERKKIVALO SYTTYY AJON AIKANA. OTTAKAA YHTEYS VALTUUTETTUUN HONDA-MYYJÄÄN.

H: BAM INFLATOR LABEL

AIRBAG-GASGENERATOR UT11873
MORTON INTERNATIONAL, INC. OGDEN, USA
HERSTELLUNGS: (JAHR)
EINFÜHRER: HONDA DEUTSCHLAND
GMBH 6050 OFFENBACH
BAM PT1-0437

DER GASGENERATOR DARF NUR FÜR INSASSENRÜCKHALTESYSTEME MIT LUFTSACK IN KRAFTFAHRZEUGE MONTIERT WERDEN.
DIE MONTAGE UND DEMONTAGE DES GASGENERATORS DARF NUR VON DAFÜR GESCHULTEM PERSONAL VORGENOMMEN WERDEN.

CAUTION CONTAINS FLAMMABLE SOLIDS	THE GAS GENERATOR SHOULD ONLY BE INSTALLED IN VEHICLES EQUIPPED WITH THE AIRBAG SYSTEM. THE GAS GENERATOR IS TO BE INSTALLED AND/OR DISASSEMBLED ONLY BY TRAINED PERSONNEL.
ATTENTION CONTENT DE SOLIDES FLAMMABLES	LE GENERATEUR DE GAZ NE PEUT ETRE INSTALLE QUE SUR DES VEHICULES EQUIPES D'UN SYSTEME AIRBAG. LE MONTAGE ET LE DEMONTAGE DU GENERATEUR DE GAZ NE PEUT ETRE EFFECTUE QUE PAR UN PERSONNEL QUALIFIE.

(cont'd)

I: FRONT SEAT PASSENGER AIRBAG MODULE DANGER

SRS

- DANGER
  EXPLOSIVE/FLAMMABLE
  POISON
- WARNING
  REFER TO SHOP MANUAL.
- DANGER
  EXPLOSIF ET INFLAMMABLE
  POISON
- ATTENTION
  SE REPORTER AU MANUEL D'ATELIER.
- GEFAHR
  EXPLOSIV/ENTZUNDBAR
  GIFT
- WARNUNG
  WERKSTATTHANDBUCH LESEN.
- GEVAAR
  EXPLOSIEGEVAAR/BRANDBAAR
  GIFTIG
- WAARSCHUWING
  LEES HET WERKPLAATSHANDBOEK.

J: STEERING COLUMN NOTICE

NOTICE
TO PREVENT SRS DAMAGE, REMOVE STEERING WHEEL BEFORE REMOVING STEERING SHAFT CONNECTING BOLT.

REMARQUE
POUR EVITER TOUT DOMMAGE DU SRS, RETIRER LE VOLANT AVANT DE RETIRER LE BOULON DE RECCORDMENT DE L'ARBRE DE DIRECTION.

K: SRS MONITOR NOTICE

SRS

NOTICE
- NO SERVICEABLE PARTS INSIDE.
- REFER TO SERVICE (SHOP) MANUAL FOR DETAILED INSTRUCTIONS.

お願い
- 分解しないで下さい。
- 取扱い、保管はサービスマニュアルを参照してください。

REMARQUE
- AUCUNE PIECE REPARABLE A L'INTERIEUR.
- POUR LES INSTRUCTIONS DETAILL'EES, SE REPORTER AU MANUEL DE REPARATIONS.

LET UP!
- GEEN ONDERDELEN BINNEN DEZE UNIT WAARAAN WERKZAAMHEDEN KUNNEN WORDEN VERRICHT.
- RAADPLEEG HET WERKPLAATSHANDBOEX VOOR NADERE AANWIJZINGEN.

ACHTUNG
- DIE INNENTILE BEDÜRFEN KEINER WARTUNG.
- AUSFÜHRLICHE ANWEISUNGEN SIND DEM WERKSTATTHANDBUCH ZU ENTNEHMEN.

L: LABEL AIRBAG

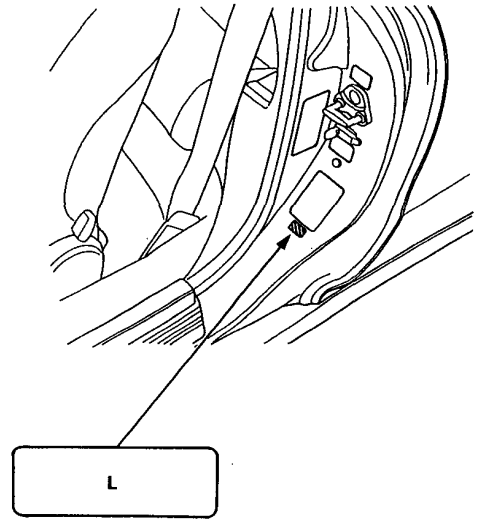

SRS Airbag System Type II:

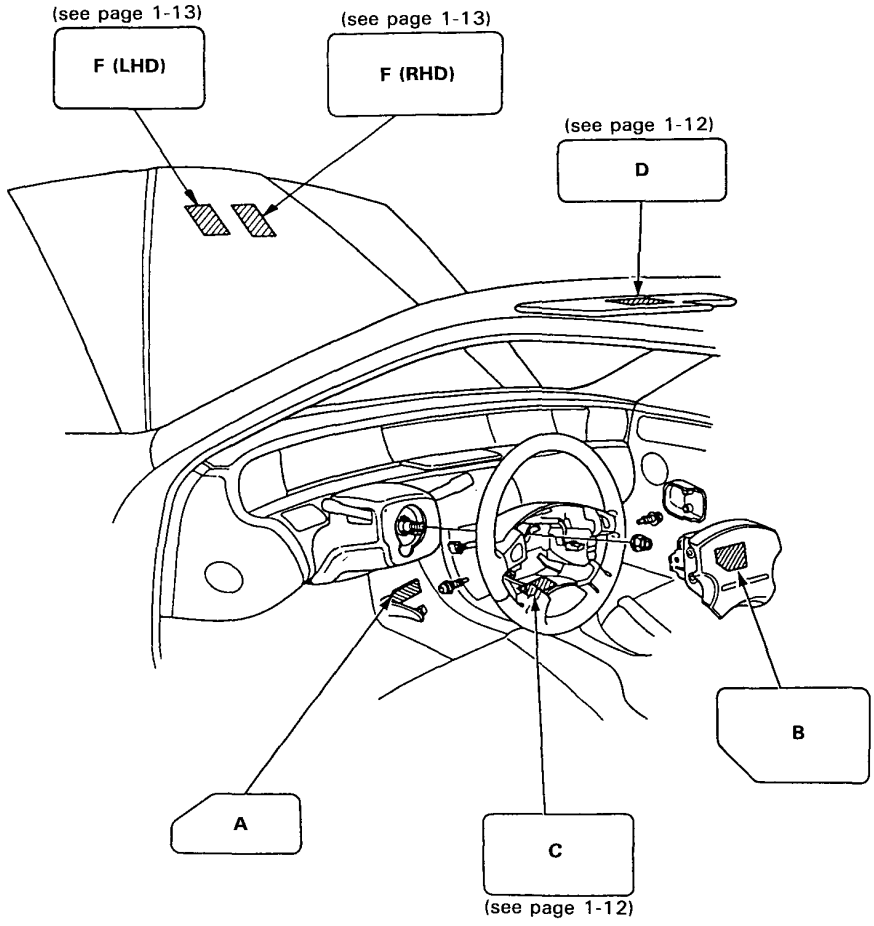

A: MAINTENANCE LID CAUTION

SRS

注意
SRSメインテナンスは、イグニッション スイッチを切ってから行うこと。

CAUTION
BEFORE MAINTENANCE, SWITCH OFF THE IGNITION.

ATTENTION
AVANT TOUT ENTRETIEN, COUPER LE CONTACT.

ACHTUNG
VOR WARTUNG ZÜNDUNG AUSSCHALTEN.

LET OP
ZET HET KONTAKTSLOT AF ALVORENS MET HET ONDERHOUD TE BEGINNEN.

B: MONITOR NOTICE

NOTICE SRS
- **REFER TO SERVICE (SHOP) MANUAL FOR DETAILED INSTRUCTIONS.**

REMARQUE
- **POUR LES INSTRUCTIONS DETAILL'EES, SE REPORTER AU MANUEL DE REPARATIONS.**

LET UP!
- **RAADPLEEG HET WERKPLAATSHANDBOEK VOOR NADERE AANWIJZINGEN.**

ACHTUNG
- **AUSFÜHRLICHE ANWEISUNGEN SIND DEM WERKSTATTHANDBUCH ZU ENTNEHMEN.**

(cont'd)

C: BODY COVER CAUTION

注意 CAUTION ACHTUNG: SRS
- SRSメンテナンス時はサービスマニュアルを参照すること。
- REFER TO THE SHOP MANUAL
- SE REPORTER AU MANUEL D'ATELIER.
- WERKSTATTHANDBUCH LESEN.
- LEES HET WERKPLAATSHANDBOEK.

D: DRIVER INFORMATION (SUNVISOR)
(Except KE, KQ, KS models)

SRS ALWAYS WEAR YOUR SEAT BELT
- THIS CAR IS EQUIPPED WITH A DRIVER AIRBAG AS A SUPPLEMENTAL RESTRAINT SYSTEM (S.R.S.).
- IT IS DESIGNED TO SUPPLEMENT THE SEAT BELT.
- IF YOUR SRS INDICATOR LIGHTS WHILE DRIVING, SEE YOUR AUTHORIZED HONDA DEALER.

SRS ATTACHEZ TOUJOURS VOTRE CEINTURE
- CE VEHICULE EST EQUIPE D'UN COUSSIN D'AIR POUR LE CONDUCTEUR QUI CONSTITUE UN SYSTEME DE RETENUE COMPLEMENTAIRE (S.R.S.).
- CE COUSSIN D'AIR COMPLETE LA FONCTION DE LA CEINTURE DE SECURITE.
- SI LE TEMOIN SRS S'ALLUME PENDANT LA CONDUITE, ADRESSEZ-VOUS A VOTRE CONCESSIONNAIRE HONDA OFFICIEL.

SRS SICHERHEITSGURTE BEI JEDER FAHRT ANLEGEN
- DIESES FAHRZEUG BESITZT EINEN FAHRER-AIRBAG ALS ZUSÄTZLICHES RÜCKHALTESYSTEM (S.R.S.).
- ES IST EINE ERGÄNZUNG ZUM SICHERHEITGURT.
- WENN DUE SRS-KONTROLLEUCHTE WAHREND DER FAHRT AUFLEUCHTET, UMGEHEND FINEN HONDA HÄNDLER AUFSUCHEN.

SRS DRAAG ALTIJD UW VEILIGHEIDSGORDEL
- DIT VOERTUIG IS UITGERUST MET EEN LUCHTKUSSEN AAN DE BESTUURDERSKANT ALTS EXTRA BESCHERMING (S.R.S.).
- DIT IS ONTWORPEN ALS EXTRA BESCHERMING BIJ DE VEILIGHEIDSGORDEL.
- ALS HEL SRS-WAARSCHUWINGSLAMPJE GAAT BRANDEN ONDER HET RIJDEN. NEEM DAN KONTAKT OP MET EEN HONDA DEALER.

(KE, KQ models)

SRS ALWAYS WEAR YOUR SEAT BELT
- THIS CAR IS EQUIPPED WITH A DRIVER AIRBAG AS A SUPPLEMENTAL RESTRAINT SYSTEM (S.R.S.).
- IT IS DESIGNED TO SUPPLEMENT THE SEAT BELT.
- IF YOUR SRS INDICATOR LIGHTS WHILE DRIVING SEE YOUR AUTHORIZED HONDA DEALER.

(KS model)

SRS ALWAYS WEAR YOUR SEAT BELT
- THIS CAR IS EQUIPPED WITH A DRIVER AIRBAG AS A SUPPLEMENTAL RESTRAINT SYSTEM (S.R.S.).
- IT IS DESIGNED TO SUPPLEMENT THE SEAT BELT.
- IF YOUR SRS INDICATOR LIGHTS WHILE DRIVING SEE YOUR AUTHORIZED HONDA DEALER.

SRS ANVÄND ALLTID BILBÄLTET
- DETTA FORDON HAR EN LUFTKUODDE FÖR FÖRARSÄTET SOM ETT KOMPLEMENTERANDE SKYDDSSYSTEM (S.R.S.).
- DET ÄR ÄMNAT ATT KOMPLEMENTERA BILBÄLTET.
- OM SRS-INDIKATORN TÄNDS UNDER KÖRNING SKALL DU KONTAKTA EN AUKTORISERAD HONDA-ÄTERFÖRSÄLJARE.

SRS KÄYTÄ AINA TURVAVÖITÄ
- TÄMÄ AUTO ON VARUSTETTU AJAJAN ILMATYYNYLLÄ JOKA ON YLMÄÄRÄINEN TUKIJÄRJESTELMÄ (S.R.S.).
- SE ON SUUNNITELTU TÄYDENTÄMÄÄN TURVAVYÖTÄ.
- JOS SRS-MERKKIVALO SYTTYY AJON AIKANA. OTTAKAA YHTEYS VALTUUTETTUUN HONDA-MYYJÄÄN.

E: LABEL AIRBAG

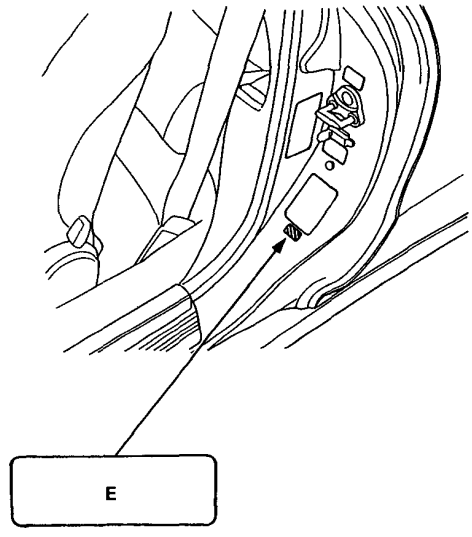

F: SRS WARNING (HOOD)
(Except KS model)

WARNING: SRS
THIS VEHICLE IS EQUIPPED WITH A DRIVER AIRBAG AS A SUPPLEMENTAL RESTRAINT SYSTEM (SRS).
ALL S.R.S. ELECTRICAL WIRING AND CONNECTORS ARE COLORED YELLOW.
DO NOT USE ELECTRICAL TEST EQUIPMENT ON THESE CIRCUITS.
TAMPERING WITH OR DISCONNECTING THE S.R.S. WIRING COULD RESULT IN ACCIDENTAL FIRING OF THE INFLATOR OR MAKE THE SYSTEM INOPERATIVE, WHICH MAY RESULT IN SERIOUS INJURY.

ATTENTION SRS
CE VEHICULE EST EQUIPE D'UN COUSSIN D'AIR DU COTE CONDUCTEUR QUI CONSTITUE UN SYSTEME DE RETENUE COMPLEMENTAIRE (S.R.S.)
TOUS LES FILS ET CONNECTEURS ELECTRIQUES DU SYSTEME DE RETENUE COMPLEMENTAIRE (S.R.S.) SONT DE COULEUR JAUNE. N'UTILISEZ PAS UN EQUIPEMENT D'ESSAIS ELECTRIQUES SUR CES CIRCUITS. NE TOUCHEZ PAS ET NE DEBRANCHEZ PAS LES FILS DU SYSTEME S.R.S. CAR CECI POURRAIT DE TRADUIRE PAR LE DECLENCHEMENT ACCIDENTEL DU GONFLEUR OU RENDRE LE SYSTEME INOPERANT ET VOUS EXPOSER AINSI A DE GRAVES BLESSURES.

WARNUNG SRS
DIESES FAHRZEUG IST MIT EINEM FAHRER-AIRBAG (SRS) ALS ZUSÄTZLICHEM RÜCKHALTESYSTEM AUSGERÜSTET.
ALLE ELEKTRISCHEN KABEL, SOWIE DIE ZUGEHÖRIGEN STECKVERBINDER DES S.R.S. -SYSTEMS SIND IN GELBER FARBE AUSGEFÜHRT.
KEINE ELEKTRISCHEN PRÜGERÄTE AN DIE S.R.S. - VERKABELUNG ANSCHLIEBEN.
VERÄNDERN ODER UNTERBRECHEN DER S.R.S - VERKABELUNG KANN UNKONTROLLIERTES ZÜNDEN DES GASGENERATORS AUSLÖSEN. ODER DAS SYSTEM AUBER FUNKTION SETZEN. WAS ZU ERNSTHAFTEN VERLETZUNGEN FÜHREN KANN.

WAARSCHUWING SRS
DIT VOERTUIG IS UITGERUST MET EEN LUCHTKUSSEN AAN DE BESTUURDERSKANT ALS EXTRA BESCHERMING (S.R.S.).
ALLE ELEKTRISCHE LEIDINGEN EN AANSLUITIGEN VAN DE S.R.S. ZIJN GEEL GEKLEURD. GEBRUIK GEEN ELEKTRISCHE TESTAPPARATUUR VOOR DEZE CIRCUITS. KNOEIEN MET OF LOSKOPPELEN VAN DE S.R.S. LEIDINGEN KAN LEIDEN TOT BRAND IN DE VULINRICHTING OF TOT UITSCHAKELEN VAN HET SYSTEEM DIT KAN TOT ERNSTIGE ONGELUKKEN LEIDEN.

(KS model)

WARNING SRS
THIS VEHICLE IS EQUIPPED WITH A AIRBAG SYSTEM AS A SUPPLEMENTAL RESTRAINT SYSTEM. (SRS)
ALL S.R.S. ELECTRICAL WIRING AND CONNECTORS ARE COLORED YELLOW.
DO NOT USE ELECTRICAL TEST EQUIPMENT ON THESE CIRCUITS.
TAMPERING WITH OR DISCONNECTING THE S.R.S. WIRING COULD RESULT IN ACCIDENTAL FIRING OF THE INFLATOR OR MAKE THE SYSTEM INOPERATIVE, WHICH MAY RESULT IN SERIOUS INJURY.

VARNING SRS
DETTA FORDON HAR EN LUFTKUDDE FÖR FÖRARSÄTET SOM ETT KOMPLETTERANDE SKYDDSSYSTEM (SRS).
SAMTLIGA ELLEDNINGAR OCH KONTAKTER I SRS-SYSTEMET ÄR GULFÄRGADE. ANVÄND INTE ELEKTRISK PROVUTRUSTNING FÖR DESSA KRETSAR. OM DU ÄNDRAR ELLER LOSSAR EN SRS-LEDNING KAN DET RESULTERA I EN OAVSIKTLIG UTLÖSNING AV TRYCKPUMPEN ELLER GÖRA ATT SYSTEMET SLUTAR FUNGERA. DÅ KAN EN ALLVARLIG OLYCKA UPPSTÅ.

VAROITUS SRS
TÄSSÄ AUTOSSA ON YLIMÄÄRÄISENÄ TUKIJÄRJESTELMÄNÄ AJAJAN ILMATYYNY. (SRS)
KAIKKI SRS-SÄHKÖJOHDOT JA -LIITTIMET OVAT KELTAISET.
ÄLÄ KÄYTÄ SÄHKÖKOELAITTEITA NÄISSÄ VIRTAPIIREISAÄ. SRS-JOHTOJEN TUKKEAMINEN TAI IRROTTAMINEN SAATTAA SYTYTTÄÄ VAHINGOSSA PUMPUN TAI TEHDÄ JÄRJESTELMÄN KÄYTTÖKELVOTTOMAKSI.
TÄSTÄ-TAAS SAATTAA AIHEUTUA VAKAVIA VAURIOITA.

Special Tools

Individual tool lists are located at the front of each section.

Specifications

Standards and Service Limits 3-2
Design Specifications 3-15
Body Specifications 3-20

Standards and Service Limits

Cylinder Head/Valve Train (F20A4, F22A1, F22A2 engines) — Sections 6

	MEASUREMENT			STANDARD (NEW)	SERVICE LIMIT
Compression	250 min^{-1} (rpm) and wide open throttle kPa (kg/cm^2, psi)	Nominal		1,250 (12.5, 178)	
		Minimum		950 (9.5, 135)	
		Maximum variation		200 (2.0, 28)	
Cylinder head	Warpage			—	0.05 (0.002)
	Height			99.95-100.05 (3.935-3.939)	—
Camshaft	End play			0.05-0.15 (0.002-0.006)	0.50 (0.02)
	Camshaft-to-holder oil clearance			0.050-0.089 (0.002-0.004)	0.15 (0.006)
	Runout			0.03 (0.001) max.	0.04 (0.002)
	Cam lobe Height	F20A4, F22A2 engines	IN	38.741 (1.5252)	—
			EX	38.972 (1.5343)	—
		F22A1 engine	IN	38.526 (1.5167)	—
			EX	38.778 (1.5266)	—
Valve	Valve clearance		IN	0.23-0.28 (0.009-0.011)	—
			EX	0.27-0.32 (0.011-0.013)	—
	Valve stem O.D.		IN	5.485-5.495 (0.2159-0.2163)	5.455 (0.2148)
			EX	5.450-5.460 (0.2146-0.2150)	5.420 (0.2134)
	Stem-to-guide clearance		IN	0.020-0.045 (0.0008-0.0018)	0.08 (0.003)
			EX	0.055-0.080 (0.0021-0.0031)	0.12 (0.005)
Valve seat	Width		IN	1.25-1.55 (0.049-0.061)	2.0 (0.079)
			EX	1.25-1.55 (0.049-0.061)	2.0 (0.079)
	Stem installed height		IN	48.245-48.715 (1.8994-1.9179)	—
			EX	50.315-50.785 (1.9809-1.9994)	—
Valve spring	Free length	F20A4, F22A2 engines	IN	53.16 (2.0929)*1	—
				53.15 (2.0925)*2	—
			EX	55.80 (2.1968)*1	—
				55.78 (2.1960)*2	—
		F22A1 engine	IN	54.81 (2.1578) *1	—
				54.82 (2.1582) *2	—
			EX	56.26 (2.2150) *1	—
				56.28 (2.2157) *2	—
Valve guide	I.D.		IN	5.515-5.530 (0.2171-0.2177)	5.55 (0.219)
			EX	5.515-5.530 (0.2171-0.2177)	5.55 (0.219)
	Installed height		IN	23.75-24.25 (0.935-0.955)	—
			EX	15.05-15.55 (0.593-0.612)	—
Rocker arm	Arm-to-shaft clearance		IN	0.017-0.050 (0.0007-0.0020)	0.08 (0.003)
			EX	0.018-0.054 (0.0007-0.0021)	0.08 (0.003)

*1: CHUO HATSUJO manufactured valve spring
*2: NIHON HATSUJO manufactured valve spring

Cylinder Head/Valve Train (H23A1, H23A2 engine) — Sections 6

Unit of length: mm (in)

	MEASUREMENT		STANDARD (NEW)	SERVICE LIMIT
Compression	250 min^{-1} (rpm) and wide open throttle kPa (kg/cm^2, psi)	Nominal	1,250 (12.5, 178)	
		Minimum	950 (9.5, 135)	
		Maximum variation	200 (2.0, 28)	
Cylinder head	Warpage		—	0.05 (0.002)
	Height		131.95-132.05 (5.195-5.199)	—
Camshaft	End play		0.05-0.15 (0.002-0.006)	0.5 (0.02)
	Camshaft-to-holder oil clearance		0.050-0.089 (0.0020-0.0035)*1	0.15 (0.006)*1
			0.100-0.139 (0.0039-0.0055)*2	0.20 (0.008)*2
	Total runout		0.03 (0.001) max.	0.04 (0.002)
	Cam lobe height	IN	33.661 (1.3252)	—
		EX	33.725 (1.3278)	—
Valve	Valve clearance	IN	0.07-0.11 (0.003-0.004)*3	—
		EX	0.15-0.19 (0.006-0.007)*3	—
	Valve stem O.D.	IN	6.580-6.590 (0.2591-0.2594)	6.55 (0.258)
		EX	6.550-6.560 (0.2579-0.2583)	6.52 (0.257)
	Stem-to-guide clearance	IN	0.02-0.05 (0.001-0.002)	0.08 (0.003)
		EX	0.05-0.08 (0.002-0.003)	0.11 (0.004)
Valve seat	Width	IN	1.25-1.55 (0.049-0.061)	2.0 (0.08)
		EX	1.25-1.55 (0.049-0.061)	2.0 (0.08)
	Stem installed height	IN	39.365-39.835 (1.5498-1.5683)	40.085 (1.5781)
		EX	39.165-39.635 (1.5419-1.5604)	39.885 (1.5703)
Valve spring	Free length	IN	47.14 (1.856)	
		EX	47.14 (1.856)	
Valve guide	I.D.	IN	6.61-6.63 (0.260-0.261)	6.70 (0.264)
		EX	6.61-6.63 (0.260-0.261)	6.70 (0.264)
	Installed height	IN	13.25-13.75 (0.522-0.541)	—
		EX	13.75-14.25 (0.541-0.561)	—

*1: Exhaust No. 5 journal
*2: Except exhaust No. 5 journal
*3: Measuring point between camshaft and rocker arm

(cont'd)

Standards and Service Limits

Cylinder Head/Valve Train (H22A1, H22A2 engines) — Section 6

	MEASUREMENT			STANDARD (NEW)	SERVICE LIMIT
Compression	250 min^{-1} (rpm) and wide open throttle kPa (kg/cm^2, psi)	Nominal		1,300 (13.0, 185)	
		Minimum		950 (9.5, 135)	
		Maximum variation		200 (2.0, 28)	
Cylinder head	Warpage			—	0.05 (0.002)
	Height			146.95-147.05 (5.785-5.789)	—
Camshaft	End play			0.05-0.15 (0.002-0.006)	0.5 (0.02)
	Camshaft-to-holder oil clearance			0.050-0.089 (0.0020-0.0035)	0.15 (0.006)
	Total runout			0.03 (0.001) max.	0.04 (0.002)
	Cam lobe height	IN	Primary	34.041 (1.3402)	—
			Mid	36.856 (1.4510)	—
			Secondary	34.971 (1.3768)	—
		EX	Primary	33.745 (1.3285)	—
			Mid	36.323 (1.4300)	—
			Secondary	34.683 (1.3655)	—
Valve	Valve clearance		IN	0.15-0.19 (0.006-0.007)*3	—
			EX	0.17-0.21 (0.007-0.008)*3	—
	Valve stem O.D.		IN	5.475-5.485 (0.2156-0.2159)	5.445 (0.2144)
			EX	5.475-5.485 (0.2156-0.2159)	5.445 (0.2144)
	Stem-to-guide clearance		IN	0.025-0.055 (0.0010-0.0022)	0.08 (0.003)
			EX	0.050-0.080 (0.0020-0.0031)	0.11 (0.004)
Valve seat	Width		IN	1.30-1.50 (0.051-0.059)	2.0 (0.079)
			EX	1.25-1.55 (0.049-0.061)	2.0 (0.079)
	Stem installed height		IN	37.465-37.935 (1.4750-1.4935)	38.185 (1.5033)
			EX	37.165-37.635 (1.4632-1.4817)	37.885 (1.4915)
Valve spring	Free length	IN	Outer	45.16 (1.778) *1	—
				45.76 (1.802) *2	—
			Inner	41.78 (1.645) *1	—
				41.75 (1.644) *2	—
		EX	Outer	46.72 (1.839) *1	—
				46.74 (1.840) *2	—
			Inner	39.32 (1.548) *1	—
				39.28 (1.546) *2	—
Valve guide	I.D.		IN	5.510-5.530 (0.2169-0.2177)	5.55 (0.219)
			EX	5.535-5.555 (0.2179-0.2187)	5.60 (0.220)
	Installed height		IN	14.55-15.05 (0.573-0.593)	—
			EX	14.95-15.45 (0.589-0.608)	—
Rocker arm	Arm-to-shaft clearance		IN	0.025-0.052 (0.0010-0.0020)	0.08 (0.003)
			EX	0.025-0.052 (0.0010-0.0020)	0.08 (0.003)

*1: CHUO HATSUJO manufactured valve spring
*2: NIHON HATSUJO manufactured valve spring
*3: Measuring point between camshaft and rocker arm

Engine Block — Section 7

Unit of length: mm (in)

	MEASUREMENT	STANDARD (NEW)	SERVICE LIMIT
Cylinder block	Warpage of deck surface	0.07 (0.003) max	0.10 (0.004)
	Bore diameter F20A4, F22A1, F22A2 engines A	85.010-85.020 (3.3468-3.3472)	85.07 (3.349)
	B	85.000-85.010 (3.3465-3.3468)	
	H23A1, H23A2, H22A1, H22A2 engines A	87.010-87.020 (3.4256-3.4260)	87.07 (3.428)
	B	87.000-87.010 (3.4252-3.4256)	
	Bore Taper	—	0.05 (0.002)
	Rebording limit F20A4, F22A1, F22A2 engines	—	0.50 (0.020)
	H23A1, H23A2, H22A1, H22A2 engines	—	0.25 (0.010)
Piston	Skirt O.D.*1 F20A4, F22A1, F22A2 engines		
	No Letter (A)	84.980-84.990 (3.3457-3.3461)	84.970 (3.3453)
	Letter (B)	84.970-84.980 (3.3453-3.3457)	84.960 (3.3449)
	H23A1, H23A2, H22A1, H22A2 engines		
	No Letter (A)	86.990-87.003 (3.4248-3.4253)	86.980 (3.4244)
	Letter (B)	86.980-86.993 (3.4244-3.4249)	86.970 (3.4240)
	Clearance in cylinder F20A4, F22A1, F22A2 engines	0.020-0.040 (0.0008-0.0016)	0.05 (0.002)
	H23A1, H23A2, H22A1, H22A2 engines	0.007-0.030 (0.0003-0.0012)	0.04 (0.002)
	Groove width (for ring)		
	F20A4, F22A1, F22A2 engines		
	Top	1.220-1.230 (0.0480-0.0484)	1.25 (0.049)
	Second	1.220-1.230 (0.0480-0.0484)	1.25 (0.049)
	Oil	2.805-2.825 (0.1104-0.1112)	2.85 (0.112)
	H23A1, H23A2, H22A1, H22A2 engines		
	Top	1.230-1.245 (0.0484-0.0490)	1.265 (0.0498)
	Second	1.230-1.245 (0.0484-0.0490)	1.265 (0.0498)
	Oil	2.805-2.820 (0.1104-0.1110)	2.85 (0.112)
Piston ring	Ring-to-groove clearance		
	Top	0.035-0.060 (0.0014-0.0024)	0.13 (0.005)
	Second	0.030-0.055 (0.0012-0.0022)	0.13 (0.005)
	Ring end gap F20A4, F22A1, F22A2 engines		
	Top	0.20-0.35 (0.008-0.014)	0.60 (0.024)
	Second	0.40-0.55 (0.016-0.022)	0.70 (0.028)
	Oil	0.20-0.70 (0.008-0.028)	0.80 (0.031)
	H23A1, H23A2, H22A1, H22A2 engines		
	Top	0.25-0.35 (0.010-0.014)	0.60 (0.024)
	Second	0.60-0.75 (0.024-0.030)	0.90 (0.035)
	Oil	0.20-0.50 (0.008-0.020)*2	0.60 (0.024)*2
		0.20-0.70 (0.008-0.028)*3	0.80 (0.031)*3
Piston pin	O.D.	21.994-22.000 (0.8659-0.8661)	—
	Pin-to-piston clearance F20A4, F22A1, F22A2 engines	0.012-0.024 (0.0005-0.0009)	—
	H23A1, H23A2, H22A1, H22A2 engines	0.012-0.026 (0.0005-0.0010)	—
Connecting rod	Pin-to-rod interference	0.013-0.032 (0.0005-0.0013)	—
	Small end bore diameter	21.968-21.981 (0.8649-0.8654)	—
	Large end bore diameter		
	Nominal Except F20A4 engine	51.0 (2.01)	—
	F20A4 engine	48.0 (1.89)	—
	End play installed on crankshaft	0.15-0.30 (0.006-0.012)	0.40 (0.016)
Crankshaft	Main journal diameter		
	No. 1 journal Except H22A1, H22A2 engines	49.984-50.008 (1.9679-1.9688)	—
	H22A1, H22A2 engines	49.976-50.000 (1.9676-1.9685)	—
	No. 2 journal	49.976-50.000 (1.9676-1.9685)	—
	No. 3 journal	49.972-49.996 (1.9674-1.9683)	—
	No. 4 journal	49.984-50.008 (1.9679-1.9688)	—
	No. 5 journal	49.988-50.012 (1.9680-1.9690)	—
	Rod journal diameter Except F20A4 engine	47.976-48.000 (1.8888-1.8898)	—
	F20A4 engine	44.976-45.000 (1.7707-1.7717)	—
	Taper	0.005 (0.0002) max.	0.006 (0.0002)
	Out-of-round Except H22A1, H22A2 engines	0.005 (0.0002) max	0.006 (0.0002)
	H22A1, H22A2 engines	0.004 (0.0002) max.	0.006 (0.0002)
	End play	0.10-0.35 (0.004-0.014)	0.45 (0.018)
	Total runout	0.03 (0.001) max	0.04 (0.002)
Bearings	Main bearing-to-journal oil clearance		
	No. 1 journal Except H22A1, H22A2 engines	0.013-0.037 (0.0005-0.0015)	0.050 (0.0020)
	H22A1, H22A2 engines	0.021-0.045 (0.0008-0.0018)	0.050 (0.0020)
	No. 2 journal	0.021-0.045 (0.0008-0.0018)	0.050 (0.0020)
	No. 3 journal	0.025-0.049 (0.0010-0.0019)	0.055 (0.0022)
	No. 4 journal	0.013-0.037 (0.0005-0.0015)	0.050 (0.0020)
	No. 5 journal	0.009-0.033 (0.0004-0.0013)	0.040 (0.0016)
	Rod bearing-to-journal oil clearance		
	F20A4 engine	0.015-0.049 (0.0006-0.0017)	0.050 (0.0020)
	H22A1, H22A2 engines	0.027-0.055 (0.0011-0.0022)	0.060 (0.0024)
	Except F20A4, H22A1, H22A2 engines	0.021-0.049 (0.0008-0.0019)	0.055 (0.0022)

*1: Measured at 21.0 mm (0.83 in) on F20A4, F22A1, F22A2 engines and 15.0 mm (0.59 in) on H23A1, H23A2, H22A1, H22A2 engines both from bottom of skirt.
*2: TEIKOKU PISTON RING manufactured piston ring.
*3: RIKEN manufactured piston ring.

Standards and Service Limits

Engine Block — Section 7 (cont'd)

	MEASUREMENT		STANDARD (NEW)	SERVICE LIMIT
Balancer shaft	Journal diameter	No. 1 journal (front)	42.722-42.734 (1.6820-1.6824)	42.71 (1.689)
		No. 1 journal (rear)	20.938-20.950 (0.8243-0.8248)	20.92 (0.824)
		No. 2 journals (front, rear)	38.712-38.724 (1.5241-1.5246)	38.70 (1.524)
		No. 3 journals (front, rear)	34.722-34.734 (1.3670-1.3675)	34.71 (1.367)
	Journal taper		0.005 (0.0002)	—
	End play	Front	0.10-0.35 (0.004-0.014)	—
		Rear	0.06-0.18 (0.002-0.007)	—
	Total runout		0.02 (0.001)	0.03 (0.001)
	Oil clearance	No. 1 journal (rear)	0.050-0.075 (0.0020-0.0030)	0.09 (0.004)
		No. 1 journal (front) and No. 3 journals (front, rear)	0.066-0.098 (0.0026-0.0039)	0.12 (0.005)
		No. 2 journals (front, rear)	0.076-0.108 (0.0030-0.0043)	0.13 (0.005)
Balancer shaft bearing	I.D.	No. 1 journal (front)	42.800-42.820 (1.6850-1.6958)	42.83 (1.686)
		No. 1 journal (rear)	21.000-21.013 (0.8268-0.8273)	21.02 (0.828)
		No. 2 journals (front and rear)	38.800-38.820 (1.5276-1.5283)	38.83 (1.529)
		No. 3 journals (front and rear)	34.800-34.820 (1.3701-1.3709)	34.83 (1.371)

Engine Lubrication — Section 8

	MEASUREMENT	STANDARD (NEW)	SERVICE LIMIT
Engine oil	Capacity ℓ (US qt, Imp qt) F20A4, F22A1, F22A2 engines	4.9 (5.2, 4.3) for engine overhaul 3.8 (4.0, 3,3) for oil change, including filter 3.5 (3.7, 3.1) for oil change without filter	
	H23A1, H23A2 engines	5.4 (5.7, 4.8) for engine overhaul 4.3 (4.5, 3.8) for oil change, including filter 4.0 (4.2, 3.5) for oil change without filter	
	H22A1, H22A2 engines	5.9 (6.2, 5.2) for engine overhaul 4.8 (5.1, 4.2) for oil change including filter 4.5 (4.8, 4.0) for oil change without filter	
Oil pump	Inner-to-outer rotor radial clearance	0.02-0.16 (0.001-0.006)	0.20 (0.008)
	Pump housing-to-outer rotor radial clearance	0.10-0.19 (0.004-0.007)	0.21 (0.008)
	Pump housing-to-rotor axial clearance	0.02-0.07 (0.001-0.003)	0.12 (0.005)
Relief valve	Pressure setting at oil temperature 80°C (176°F) kPa (kg/cm², psi) at idle	70 (0.7, 10) min.	
	at 3,000 min⁻¹ (rpm)	350 (3.5, 50) min.	

Cooling — Section 10

	MEASUREMENT	STANDARD (NEW)
Radiator	Engine coolant capacity including engine, heater, cooling line and reservoir ℓ (US qt, Imp qt) F20A4, F22A1, F22A2 engines	M/T: 7.1 (7.5, 6.2) for overhaul 3.5 (3.7, 3.1) for coolant change A/T: 7.0 (7.4, 6.2) for overhaul 3.4 (3.6, 3.0) for coolant change
	H23A1, H23A2 engines	M/T: 7.6 (8.0, 6.7) for overhaul 4.0 (4.2, 3.5) for coolant change A/T: 7.3 (7.7, 6.4) for overhaul 3.7 (3.9, 3.3) for coolant change
	H22A1, H22A2 engines	M/T: 7.8 (8.2, 6.9) for overhaul 4.2 (4.4, 3.7) for coolant change
	Reservoir capacity ℓ (US qt, Imp qt)	0.6 (0.6, 0.5)
Radiator cap	Opening pressure kPa (kg/cm², psi)	95-125 (0.95-1.25, 14-18)
Thermostat	Start to open °C (°F)	76-80 (169-176)
	Fully open °C (°F)	90 (194)
	Valve lift at fully open	8.0 (0.31) min.
Radiator fan	Coolant temperature switch A "ON" °C (°F)	
	Except H22A1, H22A2 engines	90-96 (194-205)
	H22A1, H22A2 engines	92-98 (198-208)
	Coolant temperature switch A "OFF" °C (°F)	Subtract 2-7 (4-13) from actual "ON" temperature
	Coolant temperature switch B "ON" °C (°F)	103-109 (217-228)
	Coolant temperature switch B "OFF" °C (°F)	Subtract 4-9 (7-16) from actual "ON" temperature

Unit of length: mm (in)

Fuel and Emissions — Section 11

	MEASUREMENT	STANDARD (NEW)
Fuel Pump	Relief valve opening pressure kPa (kg/cm^2, psi)	450-600 (4.5-6.0, 64.0-85.3)
Pressure regulator	Pressure with regulator vacuum hose disconnected kPa (kg/cm^2, psi)	F22A1, H23A1, H23A2 engines: 255-305 (2.55-3.05, 36-43) F20A4, F22A2, H22A1, H22A2 engines: 245-285 (2.45-2.85, 35-41)
Fuel tank	Capacity ℓ (US gal, Imp gal)	60 (15.9, 13.2)
Engine	Fast idle min^{-1} (rpm)	1,400 ± 200
	Idle speed min^{-1} (rpm) (with headlights and cooling fan off) — F20A4, F22A2 engines	M/T: 770 ± 50 A/T: 770 ± 50 (N or P position)
	F22A1, H23A1 engines	M/T: 700 ± 50 A/T: 700 ± 50 (N or P position)
	H23A2 engine	M/T: 780 ± 50 A/T: 780 ± 50 (N or P position)
	H22A1 engine	M/T: 700 ± 50
	H22A2 engine	M/T: 790 ± 50
	Idle CO %	With CATA: 0.1% max. Without CATA: 1.0 ± 1.0%

Clutch — Section 12

	MEASUREMENT	STANDARD (NEW)	SERVICE LIMIT
Clutch pedal	Pedal height to floor	LHD: 190 (7.48) RHD: 206 (8.11)	— —
	Stroke	135-145 (5.31-5.71)	—
	Free play	9-15 (0.35-0.59)	—
	Pedal play	1.0-7.0 (0.04-0.28)	—
	Disengagement height to floor	LHD: 93 (3.66) min. RHD: 109 (4.29) min.	— —
Flywheel	Clutch surface runout	0.05 (0.002) max	0.15 (0.006)
Clutch disc	Rivet head depth	1.3 (0.05) min.	0.2 (0.01)
	Thickness	8.4-9.1 (0.33-0.36)	6.0 (0.24)
Pressure plate	Warpage	0.03 (0.001) max.	0.15 (0.06)
	Diaphragm spring fingers alignment	0.6 (0.02) max.	0.8 (0.03)

Manual Transmission — Section 13

	MEASUREMENT	STANDARD (NEW)	SERVICE LIMIT
Transmission oil	Capacity ℓ (US qt, Imp qt)	1.9 (2.0, 1.7) for oil change 2.0 (2.1, 1.8) for overhaul	
Mainshaft	End play	0.10-0.16 (0.0039-0.0063)	Adjust
	Diameter of ball bearing contact area	27.977-27.990 (1.1015-1.1020)	27.94 (1.100)
	Diameter of 3rd gear contact area	37.984-38.000 (1.4954-1.4961)	37.93 (1.493)
	Diameter of ball bearing contact area	27.987-28.000 (1.1018-1.1024)	27.94 (1.100)
	Runout	0.02 (0.0008) max.	0.05 (0.002)
Mainshaft 3rd and 4th gears	I.D.	43.009-43.025 (1.6933-1.6939)	43.080 (1.6961)
	End play	0.06-0.21 (0.0024-0.0083)	0.30 (0.012)
	Thickness — 3rd gear M2J4, M2C4, M2K4	32.42-32.47 (1.276-1.278)	32.3 (1.27)
	M2F5	34.92-34.97 (1.375-1.377)	34.8 (1.37)
	4th gear M2J4, M2C4, M2K4	30.92-30.97 (1.217-1.219)	30.8 (1.21)
	M2F5	31.42-31.47 (1.237-1.239)	31.3 (1.23)
Mainshaft 5th gear	I.D.	43.009-43.025 (1.6933-1.6939)	43.080 (1.6961)
	End play	0.60-0.21 (0.0024-0.0083)	0.30 (0.012)
	Thickness	30.92-30.97 (1.217-1.219)	30.8 (1.213)
Countershaft	Diameter of needle bearing contact area	38.000-38.015 (1.4961-1.4967)	37.95 (1.494)
	Diameter of ball bearing and needle bearing contact area	24.987-25.000 (0.9837-0.9845)	24.94 (0.982)
	Diameter of 1st gear contact area	39.984-40.000 (1.5742-1.5748)	39.93 (1.572)
	Runout	0.02 (0.0008) max.	0.05 (0.002)
Countershaft 1st gear	I.D.	46.009-46.025 (1.8114-1.8120)	46.08 (1.814)
	End play	0.04-0.10 (0.002-0.004)	Adjust
Countershaft 2nd gear	I.D.	47.009-47.025 (1.8507-1.8514)	47.08 (1.854)
	End play	0.04-0.10 (0.002-0.004)	Adjust
	Thickness	28.92-28.97 (1.139-1.141)	28.8 (1.13)

Standards and Service Limits

Manual Transmission — Section 13 (cont'd)

	MEASUREMENT	STANDARD (NEW)	SERVICE LIMIT
Spacer collar (Countershaft 2nd gear)	I.D. O.D. Length A Length B	36.48-36.49 (1.4362-1.4366) 41.989-42.000 (1.6531-1.6535) 29.02-29.04 (1.1425-1.1433) 29.07-29.09 (1.144-1.145)	36.50 (1.437) 41.94 (1.652) — —
Spacer collar (Mainshaft 4th and 5th gear)	I.D. O.D. Length A Length B	31.002-31.012 (1.2205-1.2209) 37.989-38.000 (1.4956-1.4961) 56.45-56.55 (2.222-2.226) 26.03-26.08 (1.0248-1.0268)	31.06 (1.223) 37.94 (1.494) — 26.01 (1.024)
Reverse idler gear	I.D. Gear-to-reverse gear shaft clearance	20.016-20.043 (0.7880-0.7891) 0.036-0.084 (0.0014-0.0033)	20.09 (0.7909) 0.160 (0.0006)
Syncro ring	Ring-to-gear clearance (ring pushed against gear)	0.85-1.10 (0.034-0.0433)	0.40 (0.016)
Dual cone synchro	Clearance (ring pushed against gear) Outer synchro ring-to-synchro cone Synchro cone-to-gear Outer synchro ring-to-gear	 0.5-1.0 (0.02-0.04) 0.5-1.0 (0.02-0.04) 0.95-1.68 (0.037-0.066)	 0.3 (0.01) 0.3 (0.01) 0.6 (0.024)
Shift fork	Finger thickness M2J4,M2C4,M2K4 M2F5 Fork-to-synchro sleeve clearance	6.2-6.4 (0.244-0.252) 7.4-7.6 (0.291-0.299) 0.35-0.65 (0.014-0.026)	— — 1.0 (0.039)
Reverse shift fork	Pawl groove width Fork-to-reverse idle gear clearance Groove width at A Groove width at B Fork-to-fifth/ reverse shift shaft clearance at A Fork-to-fifth/ reverse shift shaft clearance at B	13.0-13.3 (0.51-0.52) 0.5-1.1 (0.02-0.43) 7.05-7.25 (0.278-0.2854) 7.4-7.7 (0.29-0.30) 0.05-0.35 (0.002-0.014) 0.4-0.8 (0.02-0.03)	— 1.8 (0.07) — — 0.5 (0.02) 1.0 (0.04)
Shift arm	I.D. Shift arm-to-shaft clearance Shift fork diameter at contact area Shift-arm-to-shift fork shaft clearance	15.973-16.000 (0.6289-0.6299) 0.005-0.059 (0.0002-0.0023) 12.9-13.0 (0.508-0.512) 0.2-0.5 (0.01-0.02)	— — — 0.6 (0.2)
Select lever	Pin size of contact area Select lever-to-shift peice clearance Shaft outer diameter Shift arm cover clearance	7.9-8.0 (0.311-0.315) 0.05-0.25 (0.002-0.010) 15.41-15.68 (0.607-0.617) 0.032-0.102 (0.003-0.0040)	— 0.5 (0.020) — —
Shift arm lever	O.D. Transmission housing clearance	15.941-15.968 (0.6276-0.6287) 0.027-0.139 (0.0011-0.0055)	— —
Interlock	Bore diameter Shift arm lever clearance	16.00-16.05 (0.630-0.632) 0.032-0.109 (0.0013-0.0043)	— —

Automatic Transmission — Section 14

	MEASUREMENT	STANDARD (NEW)	SERVICE LIMIT
Transmission fluid	Capacity ℓ (US qt, Imp qt)	6.0 (6.3, 5.3) for overhaul 2.4 (2.5, 2.1) for fluid change	
Hydraulic pressure (F20A4/F22A1/F22A2 engines) kPa (kg/cm², psi)	Line pressure at 2,000 min⁻¹ (rpm) (N or P position)	800 (8.0, 114) throttle fully-closed | 850 (8.5, 121) throttle more than 3/16 open	750 (7.5, 107) throttle more than 3/16 open
	4th clutch pressure at 2,000 min⁻¹ (rpm) (D4 position)	530 (5.3, 75) throttle fully-closed | 850 (8.5, 121) throttle more than 3/16 open	480 (4.8, 68) throttle fully-closed | 750 (7.5, 107) throttle more than 3/16 open
	3rd and 2nd clutch pressure at 2,000 min⁻¹ (rpm) (D4 position)	500 (5.0, 71) throttle fully-closed | 850 (8.5, 121) throttle more than 3/16 open	450 (4.5, 64) throttle fully-closed | 750 (7.5, 107) throttle more than 3/16 open
	2nd clutch pressure at 2,000 min⁻¹ (rpm) (2 position)	800-850 (8.0-8.5, 114-121)	750 (7.5, 107)
	1st and 1st-hold clutch pressure at 2,000 min⁻¹ (rpm) (1 position)	800-850 (8.0-8.5, 114-121)	750 (7.5, 107)
	Throttle B pressure — Throttle fully closed Throttle fully open	0 (0, 0) 800-850 (8.0-8.5, 114-121)	— 750 (7.5, 107)
Hydraulic pressure (H23A1/H23A2 engines) kPa (kg/cm², psi)	Line pressure at 2,000 min⁻¹ (rpm) (N or P position)	850 (8.5, 121) throttle fully-closed | 900 (9.0, 128) throttle more than 3/16 open	800 (8.0, 114) throttle more than 3/16 open
	4rd clutch pressure at 2,000 min⁻¹ (rpm) (D4 position)	530 (5.3, 75) throttle fully-closed | 900 (9.0, 128) throttle more than 3/16 open	480 (4.8, 68) throttle fully-closed | 800 (8.0, 114) throttle more than 3/16 open
	3rd and 2nd clutch pressure at 2,000 min⁻¹ (rpm) (D4 position)	500 (5.0, 71) throttle fully-closed | 900 (9.0, 128) throttle more than 3/16 open	450 (4.5, 64) throttle fully-closed | 800 (8.0, 114) throttle more than 3/16 open
	2nd clutch pressrue at 2,000 min⁻¹ (rpm) (2 position)	850-900 (8.5-9.0, 121-128)	800 (8.0, 114)
	1st and 1st-hold clutch pressure at 2,000 min⁻¹ (rpm) (1 position)	850-900 (8.5-9.0, 121-128)	800 (8.0, 114)
	Throttle B pressure — Throttle fully closed Throttle fully open	0 (0, 0) 850-900 (8.5-9.0, 121-128)	— 800 (8.0, 114)
Stall speed min⁻¹ (rpm) (Check with car on level ground)	F20A4/F22A1/F22A2 engines H23A1/H23A2 engines	2,500 2,750	2,350-2,650 2,600-2,900

Standards and Service Limits

Automatic Transmission — Section 14 (Cont'd)

Unit of Length: mm (in)

	MEASUREMENT	STANDARD (NEW)	SERVICE LIMIT
Clutch	Clutch initial clearance 1st-hold	0.80-1.00 (0.031-0.039)	—
	1st, 2nd	0.65-0.85 (0.026-0.033)	—
	3rd, 4th	0.4-0.6 (0.016-0.024)	—
	Clutch return spring free length 1st, 2nd, 3rd, 4th	33.5 (1.32)	31.5 (1.24)
	Clutch disc thickness	1.88-2.00 (0.074-0.079)	Until grooves worn out.
	Clutch plate thickness		
	1st, 1st-hold	1.95-2.05 (0.077-0.081)	Discoloration
	2nd F20A4/F22A1/F22A2 engines	2.55-2.65 (0.089-0.093)	↕
	H23A1/H23A2 engines	1.95-2.05 (0.077-0.081)	
	3rd, 4th	2.25-2.35 (0.089-0.093)	Discoloration
	Clutch end plate thickness Mark 1	2.05-2.10 (0.081-0.083)	Discoloration
	Mark 2	2.15-2.20 (0.085-0.087)	↕
	Mark 3	2.25-2.30 (0.089-0.091)	
	Mark 4	2.35-2.40 (0.093-0.094)	
	Mark 5	2.45-2.50 (0.096-0.098)	
	Mark 6	2.55-2.60 (0.100-0.102)	
	Mark 7	2.65-2.70 (0.104-0.106)	
	Mark 8	2.75-2.80 (0.108-0.110)	
	Mark 9	2.85-2.90 (0.112-0.114)	Discoloration
Valve body	Stator shaft needle bearing contact I.D.		
	Torque converter side	27.000-27.021 (1.0630-1.0638)	Wear or damage
	Oil pump side	29.000-29.013 (1.1417-1.1422)	—
	Oil pump gear thrust clearance	0.03-0.05 (0.001-0.002)	0.07 (0.003)
	Oil pump gear-to-body clearance Drive	0.210-0.265 (0.0083-0.0104)	—
	Driven	0.070-0.125 (0.0028-0.0049)	—
	Oil pump driven gear I.D.	14.016-14.034 (0.5518-0.5525)	Wear or damage
	Oil pump shaft O.D.	13.980-13.990 (0.5504-0.5508)	Wear or damage
Shifting device, parking brake and throttle control system	Reverse shift fork finger thickness	5.90-6.00 (0.232-0.236)	5.40 (0.213)
	Parking brake pawl	—	Wear or other defect
	Parking brake gear	—	Wear or other defect
	Throttle cam stopper height	17.0-17.1 (0.669-0,673)	—
Servo body	Shift fork shaft bore I.D.	14.000-14.010 (0.5512-0.5516)	—
	Shift fork shaft valve bore I.D.	37.000-37.039 (1.4567-1.4582)	37.045 (1.4585)
Regulator valve body	Sealing ring contact I.D.	35.000-35.025 (1.3780-1.3789)	35.05 (1.3799)
Accumulator body	Sealing ring contact I.D.	32.000-32.013 (1.2598-1.2604)	32.050 (1.2618)
Stator shaft	Sealing ring contact I.D.	29.000-29.013 (1.1417-1.1422)	29.050 (1.1437)
Transmission	Diameter of needle bearing contact area		
	On mainshaft of stator shaft	22.984-23.000 (0.9049-0.9055)	Wear or damage
	On mainshaft of 3rd gear collar	45.984-46.000 (1.8104-1.8110)	↕
	On mainshaft of 4th gear collar	31.984-32.000 (1.2592-1.2598)	
	On countershaft of 1st gear collar	40.984-41.000 (1.6135-1.6142)	
	On countershaft of 4th gear	31.975-31.991 (1.2589-1.2595)	
	On countershaft of parking gear	39.984-40.000 (1.5742-1.5748)	
	On countershaft of reverse gear	35.979-36.000 (1.4165-1.4173)	
	On secondary shaft of 1st gear	31.975-31.991 (1.2589-1.2595)	
	On secondary shaft of 2nd gear	31.975-31.991 (1.2589-1.2595)	
	On reverse idler gear shaft	13.990-14.000 (0.5508-0.5512)	
	Inside diameter		
	Mainshaft 3rd gear	52.000-52.019 (2.0472-2.0480)	
	Mainshaft 4th gear	38.005-38.021 (1.4963-1.4969)	
	Countershaft 1st gear	47.000-47.016 (1.8504-1.8510)	
	Countershaft 4th gear	38.000-38.016 (1.4961-1.4967)	
	Countershaft reverse gear	42.000-42.016 (1.6535-1.6542)	
	Countershaft idler gear	48.000-48.016 (1.8898-1.8904)	
	Secondary shaft 1st gear	36.000-36.016 (1.4173-1.4179)	
	Secondary shaft 2nd gear	37.000-37.016 (1.4567-1.4573)	
	Reverse idler gear shaft holder	14.800-14.824 (0.5827-0.5836)	Wear or damage

Automatic Transmission — Section 14

	MEASUREMENT	STANDARD (NEW)	SERVICE LIMIT
Transmission (cont'd)	Mainshaft 3rd gear collar length	19.50-19.55 (0.768-0.770)	—
	Mainshaft 4th gear collar length	47.50-47.55 (1.870-1.872)	Wear or damage
	Countershaft 1st gear collar length	27.50-27.55 (1.083-1.085)	Wear or damage
	Thrust washer thickness		
	Countershaft 1st gear	1.45-1.50 (0.057-0.059)	Wear or damage
	Countershaft idler gear	3.45-3.55 (0.136-0.140)	Wear or damage
	Countershaft parking gear length	25.030-25.048 (0.9854-0.9861)	Wear or damage
	Secondary shaft 1st gear distance collar length	4.95-5.00 (0.195-0.197)	Wear or damage
	Secondary shaft 2nd gear spline washer thickness 35 × 53 mm	4.02-4.05 (0.158-0.159)	—
		4.07-4.10 (0.160-0.161)	—
		4.12-4.15 (0.162-0.163)	—
		4.17-4.20 (0.164-0.165)	—
		4.22-4.25 (0.166-0.167)	—
		4.27-4.30 (0.168-0.169)	—
		4.32-4.35 (0.170-0.171)	—
		4.37-4.40 (0.172-0.173)	—
		4.42-4.45 (0.174-0.175)	—

	MEASUREMENT	STANDARD (NEW)			
		Wire Dia.	O.D.	Free Length	No. of Coils
Spring	Regulator valve spring A				
	F20A4/F22A1/F22A2 engines	1.8 (0.071)	14.7 (0.579)	86.5 (3.406)	16.5
	H23A1/H23A2 engines	1.8 (0.071)	14.7 (0.579)	88.6 (3.488)	16.5
	Regulator valve spring B	1.8 (0.071)	9.6 (0.378)	44.0 (1.732)	12.7
	Stator reaction spring	4.5 (0.177)	26.4*(1.039)	30.3 (1.193)	1.92
	Torque converter check valve spring	1.1 (0.043)	8.4 (0.331)	38.2 (1.504)	14.0
	Relief valve spring	1.0 (0.039)	8.4 (0.331)	39.1 (1.539)	15.1
	Cooler relief valve spring	1.1 (0.043)	8.4 (0.331)	46.8 (1.843)	17.0
	2nd orifice control valve spring	0.6 (0.024)	6.6 (0.260)	58.3 (2.295)	15.8
	Orifice control valve spring	0.8 (0.031)	6.6 (0.260)	52.5 (2.067)	33.0
	4th exhaust valve spring	0.9 (0.035)	7.1 (0.280)	60.8 (2.394)	28.9
	Throttle valve B adjusting spring	0.8 (0.031)	6.2 (0.244)	30.0 (1.181)	8.0
	Throttle valve B spring	1.4 (0.055)	8.5 (0.335)	41.5 (1.634)	10.5
		1.4 (0.055)	8.5 (0.335)	41.5 (1.634)	11.2
		1.4 (0.055)	8.5 (0.335)	41.6 (1.638)	12.4
	1-2 shift valve spring	1.0 (0.039)	8.6 (0.339)	41.3 (1.626)	16.9
	2-3/3-4 shift valve spring	0.9 (0.035)	7.6 (0:299)	57.0 (2.244)	26.8
	1st-hold accumulator spring	4.0 (0.157)	25.0 (0.984)	64.7 (2.547)	7.3
	1st accumulator spring	1.8 (0.071)	16.3 (0.642)	115.4 (4.543)	18.6
	4th accumulator spring	2.9 (0.114)	22.0 (0.866)	90.1 (3.547)	10.9
	2nd accumulator spring	3.5 (0.138)	22.0 (0.866)	77.1 (3.035)	10.0
	3rd accumulator spring	2.8 (0.110)	17.5 (0.689)	94.2 (3.709)	16.1
	Lock-up shift valve spring	0.9 (0.035)	7.6 (0.229)	73.7 (2.902)	32.0
	Lock-up timing valve spring	0.8 (0.031)	6.6 (0.260)	51.1 (2.012)	14.7
	Servo control valve spring	1.0 (0.039)	8.1 (0.319)	52.6 (2.071)	22.4
	CPC valve spring	1.4 (0.055)	9.4 (0.370)	33.0 (1.299)	10.5
	Modulator valve spring	1.4 (0.055)	9.4 (0.370)	33.0 (1.299)	10.5
	Lock-up control valve spring	0.7 (0.028)	6.6 (0.260)	38.0 (1.496)	14.1
	3rd kick-down spring	1.1 (0.043)	7.6 (0.299)	48.3 (1.902)	23.3
	3-2 kick-down spring	1.2 (0.047)	7.1 (0.280)	46.9 (1.846)	20.6

*: I.D.

Standards and Service Limits

Differential (Manual transmission) — Section 15

	MEASUREMENT	STANDARD (NEW)	SERVICE LIMIT
Differential carrier	Pinion shaft contact area I.D.	18.000-18.018 (0.7087-0.7094)	—
	Carrier-to-pinion clearance	0.013-0.047 (0.0005-0.0019)	0.10 (0.004)
	Driveshaft contact area I.D.	28.005-28.025 (1.1026-1.1033)	—
	Carrier-to-driveshaft clearance R	0.025-0.066 (0.0010-0.0026)	0.12 (0.005)
	Carrier-to-driveshaft clearance L	0.055-0.091 (0.0022-0.0036)	0.15 (0.006)
Differential	Backlash	0.05-0.15 (0.002-0.006)	Adjust
	I.D.	18.042-18.066 (0.7103-0.7113)	—
	Pinion gear-to-pinion shaft clearance	0.055-0.095 (0.0022-0.0037)	0.15 (0.006)
Tapered roller bearing preload	Starting torque N•m (kg-cm, lb-in)	1.4-2.6 (14-26, 12-23)	Adjust

Differential (Automatic transmission) — Section 15

	MEASUREMENT	STANDARD (NEW)	SERVICE LIMIT
Differential carrier	Pinion shaft contact area I.D.	18.000-18.018 (0.7087-0.7094)	—
	Carrier-to-pinion clearance	0.017-0.047 (0.0007-0.0019)	0.10 (0.004)
	Driveshaft contact area I.D.	28.005-28.025 (1.1026-1.1033)	—
	Carrier-to-driveshaft clearance	0.025-0.066 (0.0010-0.0026)	0.12 (0.005)
Differential	Backlash	0.05-0.15 (0.002-0.006)	Adjust
	I.D.	18.042-18.066 (0.7103-0.7113)	—
	Pinion gear-to-pinion shaft clearance	0.059-0.095 (0.0023-0.0037)	0.12 (0.005)
Tapered roller bearing preload	Starting torque N•m (kg-cm, lb-in) New bearings	2.8-4.0 (28-40, 24-35)	Adjust
	Starting torque N•m (kg-cm, lb-in) Reused bearings	2.5-3.7 (25-37, 22-32)	

Steering — Section 17

	MEASUREMENT	STANDARD (NEW)
Steering wheel	Play at steering wheel circumference	0-1.0 (0-0.4)
	Starting load at steering wheel circumference N (kg, lbs) Engine running	30 (3.0, 6.6)
	When the hydraulic system to the speed sensor is cut off	50 (5.0, 11.0)
Gearbox	Angle of rack-guide-screw loosened from locked position	$20° {}^{+5°}_{0}$
Pump	Pump pressure with shut-off valve closed (speed: idle. Do not run for more than 5 seconds). kPa (kg/cm², psi)	7,000-8,000 (70-80, 995-1,138)
Power steering fluid	Recommended fluid	Honda power steering fluid-V
	Fluid capacity ℓ (US qt, Imp qt) System	1.7 (1.80, 1.50)
	Fluid capacity ℓ (US qt, Imp qt) Reservoir	0.5 (0.53, 0.44)
Power steering belt*	Deflection with 100 N (10 kg, 22 lbs) between pulleys	13.5-16.5 (0.53-0.65) with used belt 9.5-11.5 (0.37-0.45) with new belt
	Belt tension N (kg, lbs) Measured with belt tension gauge	350-500 (35-50, 77-110) with used belt 700-900 (70-90, 154-198) with new belt

* When using a new belt, adjust deflection or tension to new values. Run the engine for 5 minutes then turn it off. Readjust deflection or tension to used belt values.

Unit of Length: mm (in)

Suspension — Section 18

	MEASUREMENT		STANDARD (NEW)
Wheel alignment (2WS)	Camber	Front	0° 00′ ±1°
		Rear	−0° 45′ ±1°
	Caster	Front	2° 40′ ±1°
	Total toe	Front	0 ± 2.0 (0 ±0.08)
		Rear	IN 2.0 ±2.0 (0.08 ±0.08)
	Front wheel turning angle	Inward wheel	36° 20′ ±2°
		Outward wheel	29° 40′ (reference)
Wheel alignment (4WS)	Camber	Front	0° 00′ ±1°
		Rear	−0° 45′ ±30′
	Caster	Front	2° 40′ ±1°
	Total toe	Front	0 ± 2.0 (0 ±0.08)
		Rear	IN 2.0 ±2.0 (0.08 ±0.08)
	Wheel turning angle	Inward wheel Front	36° 20′ ±2°
		Rear	6° 00′ ±1°
		Outward wheel Front	29° 40′ (reference)
		Rear	6° 20′ (reference)
Wheel	Rim runout (Aluminum wheel)	Axial	0-0.7 (0-0.03)
		Radial	0-0.7 (0-0.03)
	Rim runout (Steel wheel)	Axial	0-1.0 (0-0.04)
		Radial	0-1.0 (0-0.04)
Wheel bearing	End play	Front	0-0.05 (0-0.002)
		Rear	0-0.05 (0-0.002)

Brakes — Section 19

	MEASUREMENT		STANDARD (NEW)	SERVICE LIMIT
Parking brake lever	Play in stroke 200 N (20 kg, 44 lbs) lever force		To be locked when pulled 6-10 notches	—
Foot brake pedal	Pedal height (with floor mat removed)	M/T	LHD: 165 (6.50)	—
			RHD: 180 (7.09)	—
		A/T	186 (7.32)	—
	Free play		1-5 (1/16-13/64)	—
Master cylinder	Piston-to-pushrod clearance	Without ABS	0-0.4 (0-0.02)	—
		With ABS	0-0.2 (0-0.01)	—
Disc brake	Disc thickness	Front	23.0 (0.91)	21.0 (0.83)
		Rear	10.0 (0.39)	8.0 (0.31)
	Disc runout	Front	—	0.10 (0.004)
		Rear	—	0.10 (0.004)
	Disc parallelism	Front and rear	—	0.015 (0.0006)
	Pad thickness	Front	12.5 (0.49)	1.6 (0.06)
			11.0 (0.43)*	1.6 (0.06)*
		Rear	9.0 (0.35)	1.6 (0.06)

Characteristics	Vacuum mmHg	Pedal Pressure kg (lbs)	Line Pressure kPa (kg/cm², psi)
Without ABS	0	20 (44)	1,030 (10.3, 146) min.
	300	20 (44)	5,690 (56.9, 809) min.
	500	20 (44)	8,030 (8.03, 1,142) min.
With ABS	0	20 (44)	790 (7.9, 112) min.
	300	20 (44)	6,320 (63.2, 899) min.
	500	20 (44)	7,880 (78.8, 1,121) min.

* Cars with H23A2, H22A1 and H22A2 engines

Standards and Service Limits

Air Conditioning — Section 22

	MEASUREMENT	STANDARD (NEW)
Air conditioning system	Lubricant type: SP-10 (P/N 38899-P13-003) (For refrigerant: HFC-134a (R-134a))	
	Lubricant capacity mℓ (fl oz, Imp oz) — Condenser	10 (1/3, 0.4)
	Evaporator	30 (1, 1.1)
	Line or hose	10 (1/3, 0.4)
	Receiver	10 (1/3, 0.4)
Compressor	Lubricant type: SP-10 (P/N 38899-P13-003) (For refrigerant: HFC-134a (R-134a))	
	Lubricant capacity mℓ (fl oz, Imp oz)	120-140 (4—4-2/3, 4.2—4.9)
	Startor coil resistance at 20°C (68°F) Ω	3.05-3.35
	Pulley-to-pressure plate clearance	0.5 ± 0.15 (0.02 ± 0.006)
Compressor belt*1	Deflection with 100 N (10 kg, 22 lbs) between the pulleys	10.0-12.0 (0.39-0.47) with used belt 4.5-7.0 (0.18-0.28) with new belt
	Belt tension N (kg, lbs) Measured with belt tension gauge	450-600 (45-60, 99-132) with used belt
	Except H22A1, H22A2 engines	950-1,150 (95-115, 209-254) *with new belt*
	H22A1, H22A2 engines	1,000-1,150 (100-115, 220-254) with new belt

*1: When using a new belt, adjust deflection or tension to new values. Run the engine for 5 minutes then turn it off. Readjust deflection or tension to used belt values.

Electrical — Section 23

	MEASUREMENT	STANDARD (NEW)
Ignition coil	Rated voltage V	12
	Primary winding resistance Ω at 25°C (77°F)	0.6-0.8
	Secondary winding resistance kΩ at 25°C (77°F)	12.9-19.2*2, 14.4-21.6*3
Spark plug	Type	See section 23 (Base manual code No. 62SS000 and this supplement)
	Gap	1.0-1.1 (0.039-0.043)
Ignition timing	At idling	15° ± 2° (Red) BTDC
Alternator belt*1	Deflection with 100 N (1.0 kg, 22 lbs) between pulleys	Except H22A1, H22A2 engines: 10.0-12.0 (0.39-0.47) with used belt H22A1, H22A2 engines: 10.5-12.5 (0.42-0.51) with used belt Except H22A1, H22A2 engines: 8.5-11.0 (0.33-0.43) with new belt H22A1, H22A2 engines: 8.0-10.0 (0.32-0.40) with new belt
	Belt tension N (kg, lbs) Measured with belt tension gauge	300-450 (30-45, 66-99) with used belt Except H22A1, H22A2 engines: 500-700 (50-70, 110-154) with new belt H22A1, H22A2 engines: 550-750 (55-75, 121-165) with new belt

	MEASUREMENT	STANDARD (NEW)	SERVICE LIMIT
Alternator (NIPPONDENSO)	Output 13.5 V at hot A	80/85*4, 90/98*5, 95/102*6	—
	Coil resistance (rotor) Ω	2.1-2.5	—
	Slip ring O.D.	14.4 (0.57)	12.8 (0.50)
	Brush length	10.5 (0.41)	5.5 (0.22)
	Brush spring tension g (oz)	300-360 (10.6-12.7)	—
Starter motor (MITSUBA 1.4 kW)	Type	Spur gear reduction, Permanent magnet	
	Mica depth	0.4-0.5 (0.016-0.020)	0.15 (0.006)
	Commutator runout	0-0.02 (0-0.001)	0.05 (0.002)
	Commutator O.D.	28.0-28.1 (1.102-1.106)	27.5 (1.083)
	Brush length	15.8-16.2 (0.62-0.64)	11.0 (0.43)
	Brush spring tension (new) N (kg, lb)	16.0 18.0 (1.60-1.80, 3.53-3.93)	—
Starter motor (MITSUBA 1.6 kW)	Type	Spur gear reduction, Permanent magnet	
	Mica depth	0.4-0.5 (0.016-0.020)	0.15 (0.006)
	Commutator runout	0-0.02 (0-0.001)	0.05 (0.002)
	Commutator O.D.	28.0-28.1 (1.102-1.106)	27.5 (1.083)
	Brush length	15.8-16.2 (0.62-0.64)	11.0 (0.43)
	Brush spring tension (new) N (kg, lb)	16.0 18.0 (1.60-1.80, 3.53-3.93)	—

*1: When using a new belt, adjust deflection or tension to new values. Run the engine for 5 minutes then turn it off. Readjust deflection or tension to used belt values.
*2: F20A4, F22A2, H23H2, H22A2 engines
*3: F22A1, H23A1, H22A1 engines
*4: F20A4, F22A1, F22A2 engines
*5: H23A1, H23A2 engines
*6: H22A1, H22A2 engines

Design Specifications

	ITEM	METRIC	ENGLISH	NOTES
DIMENSIONS	Overall Length	4,440 mm	174.8 in	
	Overall Width	1,765 mm	69.5 in	
	Overall Height	1,290 mm	50.8 in	
	Wheelbase	2,550 mm	100.4 in	
	Track Front/Rear	1,525/1,515 mm	60.0/59.6 in	
	Ground Clearance	145 mm	5.7 in	
	Seating Capacity	Four		
WEIGHT	See page 3-18 to 3-19			
ENGINE	Type F20A4, F22A1, F22A2 engines	Water-cooled, 4-stroke SOHC gasoline engine		
	H23A1, H23A2 engines	Water-cooled, 4-stroke DOHC gasoline engine		
	H22A1, H22A2 engines	Water-cooled, 4-stroke DOHC VTEC gasoline engine		
	Cylinder Arrangement	Inline 4-cylinder, transverse		
	Bore and Stroke F20A4 engine	85.0 x 88.0 mm	3.35 x 3.41 in	
	F22A1, F22A2 engines	85.0 x 95.0 mm	3.35 x 3.74 in	
	H23A1, H23A2 engines	87.0 x 95.0 mm	3.43 x 3.74 in	
	H22A1, H22A2 engines	87.0 x 90.7 mm	3.43 x 3.57 in	
	Displacement F20A4 engine	1,997 cm^3 (mℓ)	122 cu-in	
	F22A1, F22A2 engines	2,156 cm^3 (mℓ)	132 cu-in	
	H23A1 engine	2,258 cm^3 (mℓ)	138 cu-in	
	H23A2 engine	2,259 cm^3 (mℓ)	138 cu-in	
	H22A1, H22A2 engines	2,157 cm^3 (mℓ)	132 cu-in	
	Compression Ratio F20A4 engine	9.5 : 1		
	F22A1 engine	8.8 : 1		
	F22A2 engine	8.9 : 1		
	H23A1, H23A2 engines	9.8 : 1		
	H22A1, H22A2 engines	10.0 : 1		
	Valve Train F20A4, F22A1, F22A2 engines	Belt driven, SOHC 4 valve per cylinder		
	H23A1, H23A2 engines	Belt driven, DOHC 4 valve per cylinder		
	H22A1, H22A2 engines	Belt driven, DOHC VTEC 4 valve per cylinder		
	Lubrication System	Forced and wet sump, trochoid pump		
	Oil Pump Displacement at 6,000 min^{-1} (rpm)			
	F20A4, F22A1, F22A2 engines	54.3 ℓ (56.7 US qt, 47.3 Imp qt)/minute		
	Except F20A4, F22A1, F22A2 engines	59.1 ℓ (62.5 US qt, 52.0 Imp qt)/minute		
	Water Pump Displacement at 6,000 min^{-1} (rpm)			
	F20A4, F22A1, F22A2 engines	165 ℓ (174 US qt, 145 Imp qt)/minute		
	H23A1, H23A2 engines	159 ℓ (168 US qt, 140 Imp qt)/minute		
	H22A1, H22A2 engines	163 ℓ (172 US qt, 143 Imp qt)/minute		
	Recommended Gasoline			
	F20A4, H23A1, H23A2, H22A1, H22A2 engines	Premium UNLEADED grade gasoline with 95 Research Octane Number (RON) or higher		F22A2 engines*1: UNLEADED grade gasoline with 91 RON or higher may also be used.
	F22A1 engine	UNLEADED grade gasoline with 91 Research Octane Number (RON) or higher		
	F22A2 engine*1	LEADED grade gasoline with 91 Research Octane Number (RON) or higher		
STARTER	Type	Gear reduction		
	Normal Output	1.4 kW, 1.6 kW		
	Normal Voltage	12 V		
	Hour Rating	30 seconds		
	Direction of Rotation	Clockwise as viewed from gear end		
	Weight	3.7 kg	8.2 lbs	
CLUTCH	Clutch Type M/T	Single plate dry, diaphragm spring		
	A/T	Torque converter		
	Clutch Facing Area M/T	203 cm^2	31 sq-in	

(cont'd)

Design Specifications

(cont'd)

	ITEM		METRIC		ENGLISH		NOTES
TRANSMISSION	Type	M/T	Synchronized 5-speed forward, 1 reverse				
		A/T	Electronically controlled 4-speed automatic, 1 reverse				
	Primary Reduction		Direct 1 : 1				
	Manual transmission		F20A4, F22A1 engines	F22A2 engine	H23A1, H23A2 engines	H22A1, H22A2 engines	
	Gear Ratio	1st	3.307	3.307	3.307	3.307	
		2nd	1.809	1.809	1.809	1.950	
		3rd	1.269	1.230	1.269	1.360	
		4th	0.966	0.933	0.966	1.071	
		5th	0.787	0.757	0.757	0.870	
		Reverse	3.000	3.000	3.000	3.000	
	Final Reduction Gear	Type	Single helical gear				
		Ratio	4.266			4.266*1 4.062*2	*1: H22A1 engine *2: H22A2 engine
	Automatic transmission		F20A4, F22A1, H23A1 H23A2 engines		F22A2 engine		
	Gear Ratio	1st	2.705		2.705		
		2nd	1.366		1.428		
		3rd	1.028		1.028		
		4th	0.750		0.731		
		Reverse	2.047		2.047		
	Final Reduction Gear	Type	Single helical gear				
		Ratio	4.285				
AIR CONDITIONING	Cooling Capacity		3,700 Kcal/h		14,680 BTU/h		
	Compressor	Type/Make	Scroll/SANDEN				
		No. of Cylinder	—				
		Capacity	85.7 cm^3 (mℓ)/rev		5.23 cu-in/rev		
		Max. Speed	10,000 min^{-1} (rpm)				
		Lubricant Capacity	120 mℓ		4 fl oz, 4.2 Imp oz		
		Lubricant Type	SP-10 (P/N 38899-P13-003)				
	Condenser	Type	Corrugated fin				
	Evaporator	Type	Corrugated fin				
	Blower	Type	Sirocco fan				
		Motor Input	220 W/12 V				
		Speed Control	4-speed				
		Max. Capacity	460 m^3/h		16,247 cu-ft/h		
	Temperature Control		Air-mix type				
	Compressor Clutch	Type	Dry, single plate, poly-V-belt drive				
		Power Consumption	42 W max./12 V at 20°C (68°F)				
	Refrigerant	Type	HFC-134a (R-134a)				
		Quantity LHD	650_{-50}^{0} g		$22.9_{-1.8}^{0}$ oz		
		Quantity RHD	700_{-50}^{0} g		$24.7_{-1.8}^{0}$ oz		
STEERING SYSTEM	Type		Power assisted, rack and pinion				
	Overall Ratio		2WS: 15.86, 4WS: 15.1				
	Turns, Lock-to-Lock		2WS: 2.91, 4WS: 2.77				
	Steering Wheel Diameter		380 mm		15.0 in		

	ITEM		METRIC	ENGLISH	NOTES
SUSPENSION	Type	Front	Independent double wishbone, coil spring with stabilizer		
		Rear	Independent double wishbone, coil spring with stabilizer		
	Shock Absorber	Front and Rear	Telescopic, hydraulic nitrogen gas-filled		
WHEEL ALIGNMENT	Camber	Front	0°00′		
		Rear	−0°45′		
	Caster	Front	2°40′		
	Total Toe	Front	0 mm	0 in	
		Rear	In 2.0 mm	In 0.08 in	
BRAKE SYSTEM	Type	Front	Power-assisted self-adjusting ventilated disc		
		Rear	Power assisted self-adjusting solid disc		
	Pad Surface Area	Front	58.0 cm^2 x 2	8.99 sq-in x 2	
			49.4 cm^2 x 2	7.66 sq-in x 2	
		Rear	27.9 cm^2 x 2	4.32 sq-in x 2	
	Parking Brake	Type	Mechanical actuating, rear two wheel brakes		
TIRE	Size and Pressure		See tire information label on the driver's door jamb.		
ELECTRICAL	Battery		12 V−55 AH/5HR*1, 12 V−52 AH/5HR*2 12 V−38 AH/5HR*3		
	Starter		12 V−1.6 kW*4, 12 V−1.4 kW*5		
	Alternator		12 V−95 A*6, 12 V−90 A*7, 12 V−80 A8		
	Fuses	In Under-dash Fuse/Relay Box	7.5 A, 10 A, 15 A, 20 A, 30 A		
		In Under-hood Fuse/Relay Box	7.5 A, 10 A, 15 A, 20 A, 30 A, 40 A, 50 A, 60 A, 100 A		
	Headlights	Inside	12 V−55 W*9, 12 V−65 W*10		
		Outside	12 V−60/55 W*9, 12 V−55 W*10		
	Front Turn Signal Lights		12 V−21 W		
	Front Position Lights		12 V−5 W		
	Side Turn Signal Lights		12 V−5 W		
	Rear Turn Signal Lights		12 V−21 W		
	Brake/Taillights		12 V−21/5 W		
	Back-up Lights		12 V−21 W		
	Rear Fog Light*11		12 V−21 W		
	License Plate Lights		12 V−5 W*12, 12 V−8 W*13		
	High Mount Brake Light*14		12 V−21 CP		
	Interior Light		12 V−8 W		
	Trunk Lights		12 V−3.4 W		
	Gauge Lights		12 V−1.4 W, 1.7 W, 3.0 W		
	Indicator Lights		12 V−1.12 W, 1.4 W, 1.7 W, 3.0 W, 3.2 W		
	Illumination and Pilot Lights		12 V−0.56 W, 0.84 W, 0.91 W, 1.12 W, 1.4 W, LED		
	Heater Illumination Lights		12 V−1.4 W		

*1: H23A2 (KS model), H22A1, H22A2 engines
*2: H23A2 (except KS model), F20A4, H23A1 engines
*3: F22A1, F22A2 engines
*4: Except F20A4 (M/T), F22A1 (M/T), F22A2 engines
*5: F20A4 (M/T), F22A1 (M/T), F22A2 engines
*6: H22A1, H22A2 engines
*7: H23A1, H23A2 engines
*8: F20A4, F22A1, F22A2 engines
*9: Except KY model
*10: KY model
*11: Except KQ, KY, KT models
*12: Except KY, KT models
*13: KY, KT models
*14: KQ, KY models

Design Specifications

European Models

	ITEM	METRIC	ENGLISH	NOTES
WEIGHT	Curb Weight			
	2.0 ℓ M/T	1,220 kg 1,195 kg	2,690 lbs 2,634 lbs	KF, KG*1, KS, KE KG*2
	2.0 ℓ A/T	1,245 kg 1,220 kg	2,745 lbs 2,689 lbs	KF, KG*1, KS, KE KG*2
	2.0 ℓ M/T with ABS	1,235 kg 1,210 kg	2,723 lbs 2,668 lbs	KF, KG*1, KS, KE KF*2
	2.0 ℓ A/T with ABS	1,260 kg 1,235 kg	2,778 lbs 2,723 lbs	KF, KG*1, KS, KE KG*2
	2.3 ℓ M/T with ABS	1,250 kg 1,225 kg	2,756 lbs 2,701 lbs	KF, KG*1, KS, KE KG*2
	2.3 ℓ A/T with ABS	1,275 kg 1,250 kg	2,811 lbs 2,756 lbs	KF, KG*1, KS, KE KG*2
	2.3 ℓ M/T with ABS, 4WS	1,270 kg 1,245 kg	2,800 lbs 2,745 lbs	KF, KG*1, KS, KE KG*2
	2.3 ℓ A/T with ABS, 4WS	1,295 kg 1,270 kg	2,855 lbs 2,800 lbs	KF, KG*1, KS, KE KG*2
	2.2 ℓ VTEC M/T	1,305 kg 1,280 kg	2,877 lbs 2,822 lbs	KF, KG*1, KS, KE KG*2
	Weight Distributions (Front/Rear)			
	2.0 ℓ M/T	760/460 kg —	1,675/1,014 lbs —	KF, KG*1, KS, KE KG*2
	2.0 ℓ A/T	785/460 kg —	1,731/1,014 lbs —	KF, KG*1, KS, KE KG*2
	2.0 ℓ M/T with ABS	773/462 kg —	1,704/1,019 lbs —	KF, KG*1, KS, KE KG*2
	2.0 ℓ A/T with ABS	798/462 kg —	1,759/1,018 lbs —	KF, KG*1, KS, KE KG*2
	2.3 ℓ M/T with ABS	785/465 kg —	1,731/1,025 lbs —	KF, KG*1, KS, KE KG*2
	2.3 ℓ A/T with ABS	810/465 kg —	1,786/1,025 lbs —	KF, KG*1, KS, KE KG*2
	2.3 ℓ M/T with ABS, 4WS	785/485 kg —	1,731/1,069 lbs —	KF, KG*1, KS, KE KG*2
	2.3 ℓ A/T with ABS, 4WS	810/485 kg —	1,786/1,069 lbs —	KF, KG*1, KS, KE KG*2
	2.2 ℓ VTEC M/T	808/497 kg —	1,781/1,096 lbs —	KF, KG*1, KS, KE KG*2
	Max. Permissible Weight (MPW)	1,720 kg	3,792 lbs	

KG*1: KG type except Netherlands, KG*2: KG type for Netherlands (half tank of gasoline).

Except European Models

	ITEM	METRIC	ENGLISH	NOTES
WEIGHT	Curb Weight			
	2.2 ℓ M/T	1,220 kg	2,690 lbs	KQ
		1,260 kg	2,778 lbs	KY
	2.2 ℓ A/T	1,245 kg	2,745 lbs	KQ
		1,285 kg	2,833 lbs	KY
	2.3 ℓ M/T	1,265 kg	2,789 lbs	KQ
	2.3 ℓ A/T	1,290 kg	2,844 lbs	KQ
	2.3 ℓ M/T with ABS, SRS	1,300 kg	2,866 lbs	KQ
	2.3 ℓ A/T with ABS, SRS	1,325 kg	2,921 lbs	KQ
	2.2 ℓ VTEC M/T	1,325 kg	2,921 lbs	KQ
	Weight Distributions (Front/Rear)			
	2.2 ℓ M/T	750/470 kg	1,653/1,036 lbs	KQ
		775/485 kg	1,709/1,069 lbs	KY
	2.2 ℓ A/T	775/470 kg	1,709/1,036 lbs	KQ
		800/485 kg	1,764/1,069 lbs	KY
	2.3 ℓ M/T	770/495 kg	1,698/1,091 lbs	KQ
	2.3 ℓ A/T	795/495 kg	1,753/1,091 lbs	KQ
	2.3 ℓ M/T with ABS, SRS	805/495 kg	1,775/1,091 lbs	KQ
	2.3 ℓ A/T with ABS, SRS	830/495 kg	1,830/1,091 lbs	KQ
	2.2 ℓ VTEC M/T	815/510 kg	1,797/1,124 lbs	KQ
	Max. Loaded Vehicle Weight (ADR)	1,653 kg	3,644 lbs	KQ
	Max. Vehicle Weight (MVW)	1,720 kg	3,792 lbs	KY

Body Specifications

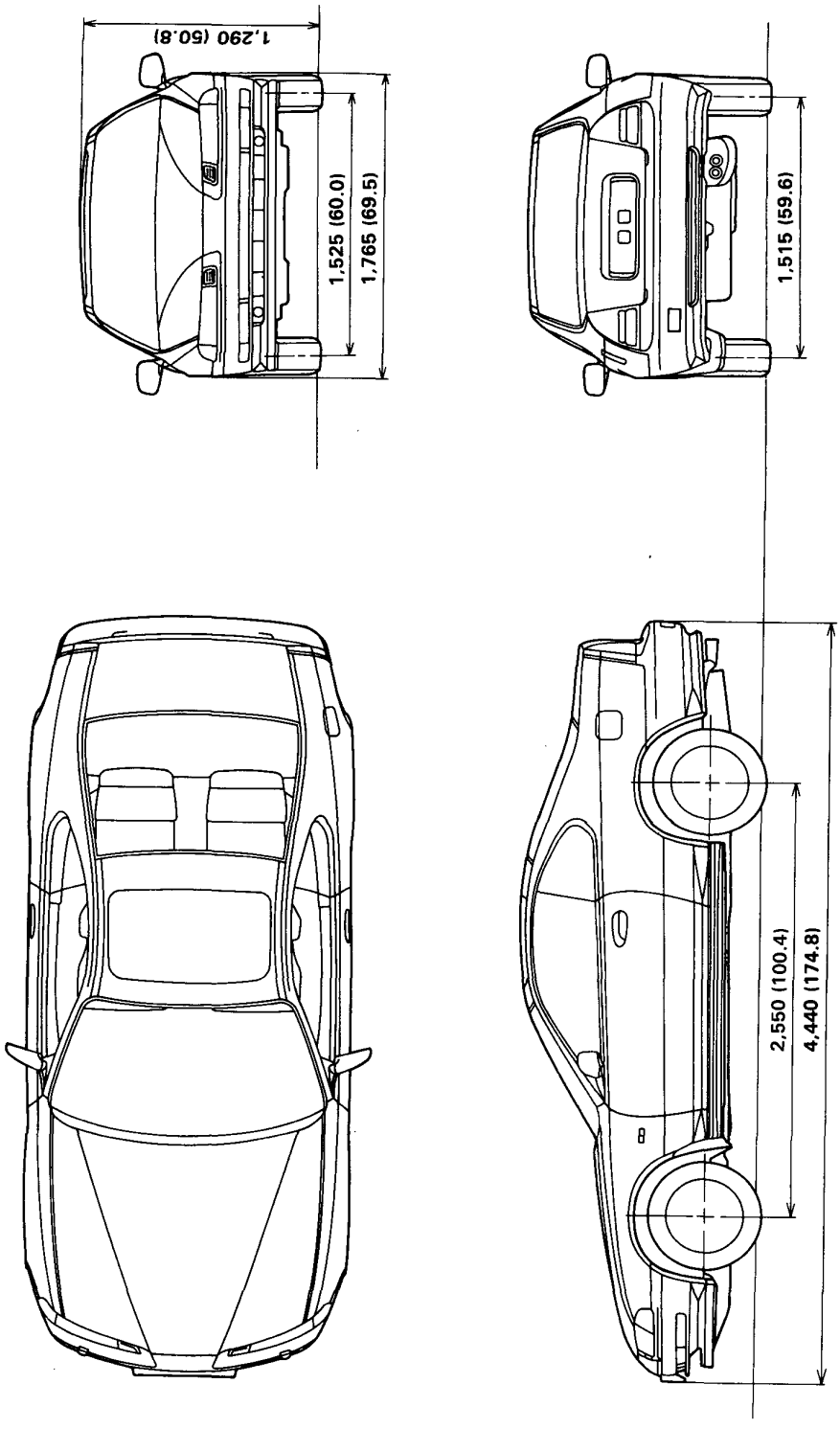

Maintenance

Lubrication Points 4-2
Maintenance Schedule 4-4

Lubrication Points

For the details of lubrication points and types of lubricants to be applied, refer to the Illustrated Index and various work procedures (such as Assembly/Reassembly, Replacement, Overhaul, Installation, etc.) contained in each section.

No.	LUBRICATION POINTS		LUBRICANT
1	Engine		Always use a fuel-efficient oil is that says "API Service SF, SG or SH." SAE Viscosity: See chart below.
2	Transmission	Manual	API Service Grade: SF or SG SAE Viscosity: 10 W-30 or 10 W-40
		Automatic	Honda Premium Formula Automatic Transmission Fluid or an equivalent DEXRON® II Automatic transmission fluid
3	Brake Line		Brake fluid DOT3 or DOT4
4	Clutch Line		Brake fluid DOT3 or DOT4
5	Power steering gearbox		Steering grease P/N 08733—B070E
6	Shift lever pivots (Manual transmission)		Grease with molybdenum disulfide
7	Release fork (Manual transmission)		Urea Grease UM264 P/N 41211—PY5—305
8 9 10 11 12 13 14 15 16 17 18 19 20	Steering boots Steering ball joints Select lever (Automatic transmission) Pedal linkage Intermediate shaft Brake master cylinder pushrod Trunk hinges and latches Door hinges upper/lower and latches Door opening detents Fuel filler lid Hood hinges and hood latch Clutch master cylinder pushrod Throttle cable end		Multi-purpose grease
21 22	Caliper Piston seal, Dust seal, Caliper pin, Piston Shift and select cable ends		Silicone grease
23	Power steering system		Honda power steering fluid-V
24	Air conditioner compressor		Compressor oil: SP-10 P/N 38899—P13—003 (For Refrigerant: HFC-134a (R-134a))

Select the oil for the car according to this chart:

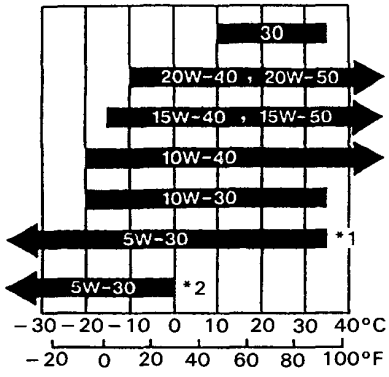

Ambient temperature ranges

CAUTION: Used engine oil may cause skin cancer if repeatedly left in contact with the skin for prolonged periods. Although this is unlikely unless you handle used oil on a daily basis, it is still advisable to thoroughly wash your hands with soap and water as soon as possible after handling used oil.

*1: Except cars with H22A1, H22A2 engines.
*2: Cars with H22A1, H22A2 engines.

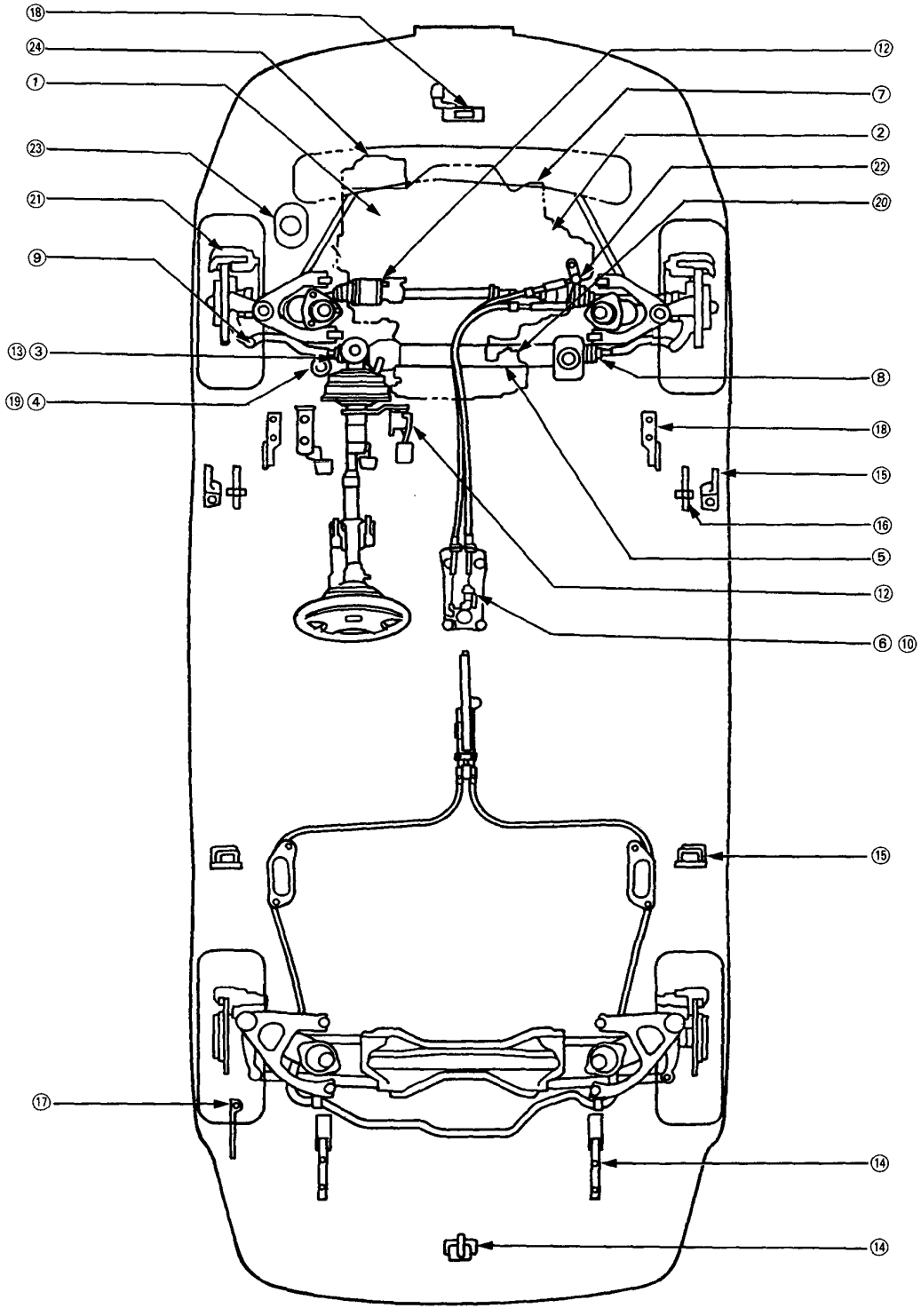
⑱
㉔
①
㉓
㉑
⑨
⑬③
⑲④
⑫
⑦
②
㉒
⑳
⑧
⑱
⑮
⑯
⑤
⑫
⑥⑩
⑮
⑰
⑭
⑭

R—Replace I—Inspect: After inspection, clean, adjust, fill up, repair or replace if necessary.

Service at the interval listed x 1,000 km (or miles) or after that number of months, whichever comes first.			x 1,000 km	20	40	60	80	100	120	140	160	180	200
			x 1,000 miles	12	24	36	48	60	72	84	96	108	120
			months	12	24	36	48	60	72	84	96	108	120
• Engine oil and oil filter	For European models			Replace every 10,000 km (6,000 miles) or 12 months									
	For other than European models			Replace every 10,000 km (6,000 miles) or 6 months									
• Transmission oil	For European models					R			R			R	
	For other than European models				R		R		R		R		R
Valve clearance	For European models				I		I		I		I		I
	For other than European models			I	I	I	I	I	I	I	I	I	I
Belt tension and conditions (Alternator, Power steering, A/C compressor)					I		I		I		I		I
Timing belt and timing balancer belt								R					R
Water pump								I					I
Cooling system hoses and connections					I		I		I		I		I
• Engine coolant							R		R		R		R
Spark plugs	For H22A1, H22A2 engines							R*1					R*1
	Except for H22A1, H22A2 engines	For cars with catalytic converter			R		R		R		R		R
				For KS model, replace every 48,000 km (30,000 miles)									
		For cars without catalytic converter		R	R	R	R	R	R	R	R	R	R
Ignition timing (For other than European models)					I		I		I		I		I
Air cleaner element	For cars with catalytic converter				R		R		R		R		R
	For cars without catalytic converter			R	R	R	R	R	R	R	R	R	R
Tank, fuel lines and connections					I		I		I		I		I
Fuel filter					R		R		R		R		R
Positive crankcase ventilation valve								I					I
Idle speed and idle CO				I*2	I*2	I*2	I*2	I	I	I	I	I	I

•: Day to day care (engine oil, ATF and coolant level) should be done practically according to the owner's manual by the customer.
*1: Replace every 6 years or 100,000 km (60,000 miles), whichever comes first.
*2: For KS model, recommended by manufacturer only: except for KS model, it is required.

R—Replace I—Inspect: After inspection, clean, adjust, fill up, repair or replace if necessary.

Service at the interval listed x 1,000 km (or miles) or after that number of months, whichever comes first.		x 1,000 km	20	40	60	80	100	120	140	160	180	200
		x 1,000 miles	12	24	36	48	60	72	84	96	108	120
		months	12	24	36	48	60	72	84	96	108	120
Evaporative emission control system (For other than European models)							I					I
Distributor cap and rotor (For other than European models)				I		I		I		I		I
Ignition wiring (For other than European models)				I		I		I		I		I
Front brake pads			Inspect every 10,000 km (6,000 miles) or 12 months									
Front brake discs and calipers			I	I	I	I	I	I	I	I	I	I
Rear brake discs, calipers and pads				I		I		I		I		I
Parking brake operation			I	I		I		I		I		I
Brake fluid (Including ABS)				R		R		R		R		R
Brake hoses and lines			I	I	I	I	I	I	I	I	I	I
Anti-lock brake system operation (For cars with ABS)			I	I		I		I		I		I
Anti-lock brake system high pressure hose (For cars with ABS)						R				R		
Exhaust system and condition			I	I	I	I	I	I	I	I	I	I
Catalytic converter heat shield (For cars with catalytic converter)							I					I
Suspension components			I	I	I	I	I	I	I	I	I	I
Steering function, tie-rod ends, gear box and boots (Including rear actuator for 4WS model)	Except for 4WS model		I	I		I		I		I		I
	For 4WS model		I	I	I	I	I	I	I	I	I	I
Power steering function, hoses and connections			I	I	I	I	I	I	I	I	I	I
All fluid levels			Inspect every 10,000 km (6,000 miles) or 12 months									
Battery condition			I	I	I	I	I	I	I	I	I	I
Tyres condition, wear and pressure (Including spare)			Inspect every 10,000 km (6,000 miles) or 12 months									
Lights operation and headlight beam			Inspect every 10,000 km (6,000 miles) or 12 months									
Paint damages and body work			I	I	I	I	I	I	I	I	I	I
Test drive (Noise, stability, dashboard operations)			I	I	I	I	I	I	I	I	I	I
Cleanliness of controls, door handles etc.			Inspect after every Service									
Supplemental Restraint System			Inspect system and replace slip ring*3 10 years after first registration.									

*3: Except for cars with passenger's airbag

(cont'd)

Severe Driving Conditions

The following items must be serviced more frequently on cars normally used under severe driving conditions. Refer to the chart below for the appropriate maintenance intervals.

Severe driving conditions include:

A: Repeated short distance driving.
B: Driving in dusty conditions.
C: Driving in severe cold weather.
D: Driving in areas using road salt or other corrosive materials.
E: Driving on rough and/or muddy roads.
F: Towing a trailer.

R = Replace C = Clean I = Inspect: After inspection, clean, adjust, fill up, repair or replace if necessary.

Condition	Maintenance		Operation	Interval
A B • • • F	Engine oil and oil filter	For European models	R	Every 5,000 km (3,000 miles) or 6 months
		For other than European models	R	Every 5,000 km (3,000 miles) or 3 months
• • • • • F	Transmission oil		R	Every 20,000 km (12,000 miles) or 12 months
• B • • E •	Air cleaner element	For cars with catalytic converter	C	Every 20,000 km (12,000 miles) or 12 months
			R	Every 40,000 km (24,000 miles) or 24 months
		For cars without catalytic converter	C	Every 10,000 km (6,000 miles) or 6 months
			R	Every 20,000 km (12,000 miles) or 12 months
A B • D E F	Front brake discs and calipers		I	Every 10,000 km (6,000 miles) or 6 months
A B • D E F	Rear brake discs, calipers and pads		I	Every 20,000 km (12,000 miles) or 12 months
• B C • E •	Power steering system		I	Every 10,000 km (6,000 miles) or 6 months

Engine Lubrication

Engine Oil
Replacement 8-2

NOTE: The H22A1 engine has been adopted. For the service procedures, refer to the procedures for H22A2 engine.
Refer to Shop Manual 62SS000 and 62SS020 for the items not shown in this section.

Outline of Model Changes

- The SH grade oil has been added.

Engine Oil

Replacement

1. Warm up the engine.
2. Drain the engine oil.

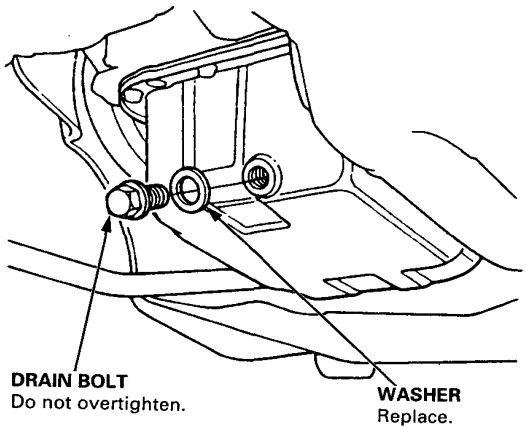

3. Reinstall the drain bolt with a new washer, and refill with the recommended oil.

Requirement	Always use a fuel-efficient oil is that says "API Service SF, SG or SH". SAE Viscosity: See chart right column.
Capacity	F20A4, F22A1, F22A2 engines: 3.8 ℓ (4.0 US qt, 3.3 Imp qt) at change, including filter. 4.9 ℓ (5.2 US qt, 4.3 Imp qt) after engine overhaul. H23A1, H23A2 engines: 4.3 ℓ (4.5 US qt, 3.8 Imp qt) at change, including filter 5.4 ℓ (5.7 US qt, 4.8 Imp qt) after engine overhaul. H22A1, H22A2 engines: 4.8 ℓ (5.1 US qt, 4.2 Imp qt) at change, including filter. 5.9 ℓ (6.2 US qt, 5.2 Imp qt) after engine overhaul.
Change	Every 10,000 km (6,000 miles) or 6 (12*3) months.

*3: European models

Engine Oil SAE Viscosity for Outside Temperature Ranges.

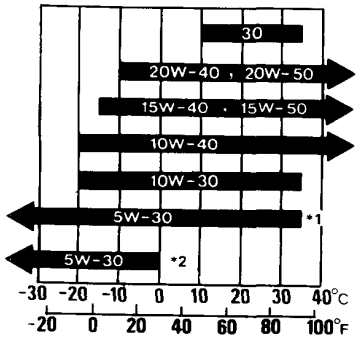

Ambient temperature ranges

*1: Except H22A1, H22A2 engines
*2: H22A1, H22A2 engines

4. Fill the engine with oil up to the specified level, run the engine for more than 3 minutes, then check for oil leakage.

Fuel and Emissions

Component Locations
- Index 11-2

System Description
- Vacuum Connections 11-3
- Electrical Connections 11-4

Troubleshooting
- Self-diagnostic Procedures 11-7

PGM-FI Control System
- Ignition Output Signal 11-8

Fuel Supply System
- Fuel Injectors 11-10
- PGM-FI Main Relay 11-12

Idle Control System
- Idle Speed Setting 11-14

Outline of Model Changes

- H22A1 engine has been added for KQ model.
- The main wire harness (Ignition Output Signal, PGM-FI Main Relay circuit) has been changed.

Component Locations

Index (H22A1 engine)

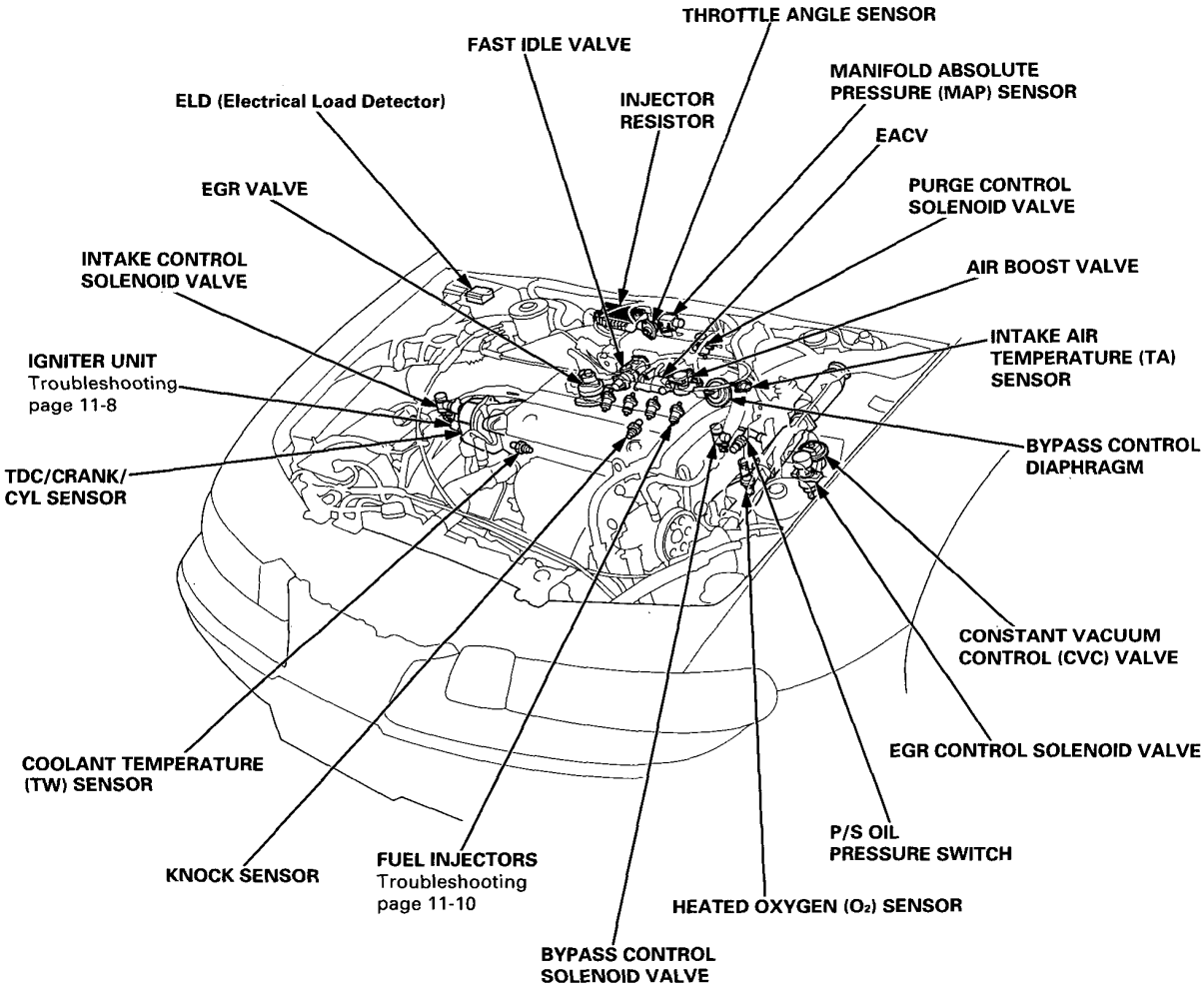

System Description

Vacuum Connections (H22A1 engine)

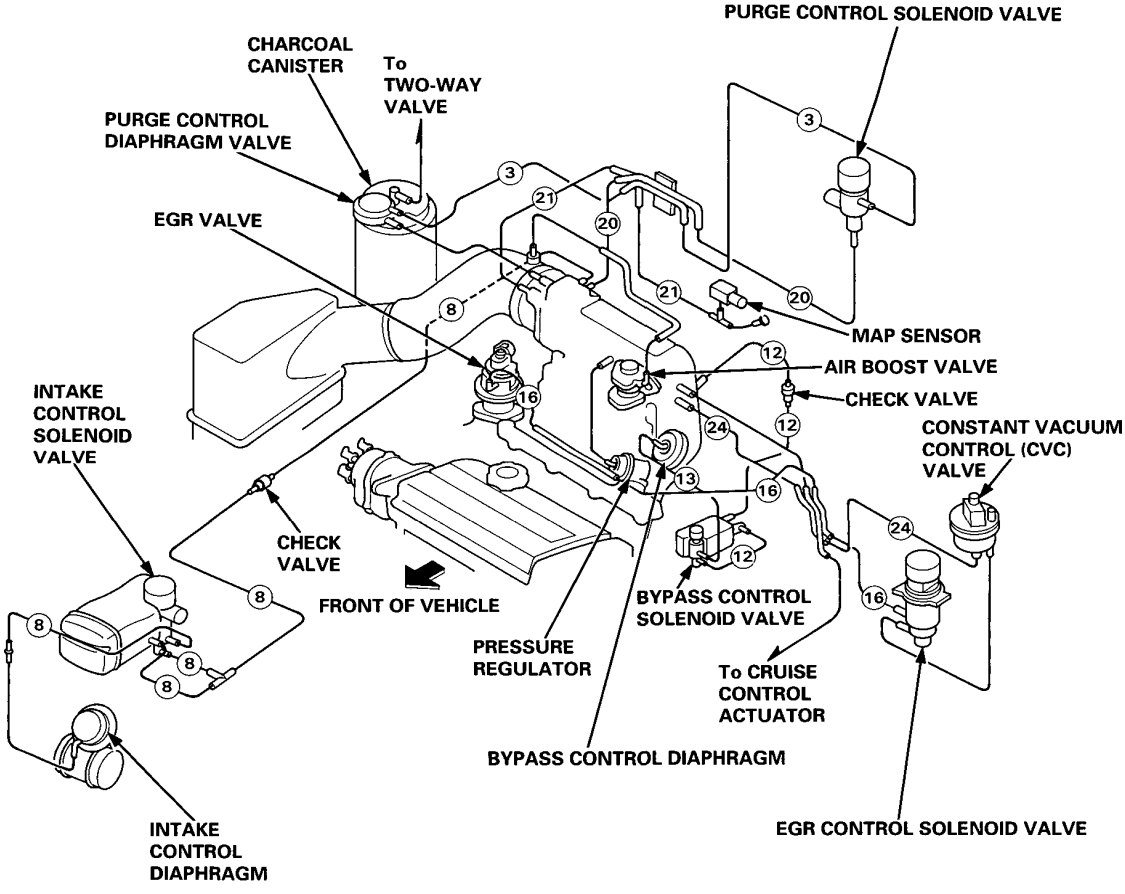

System Description

Electrical Connections

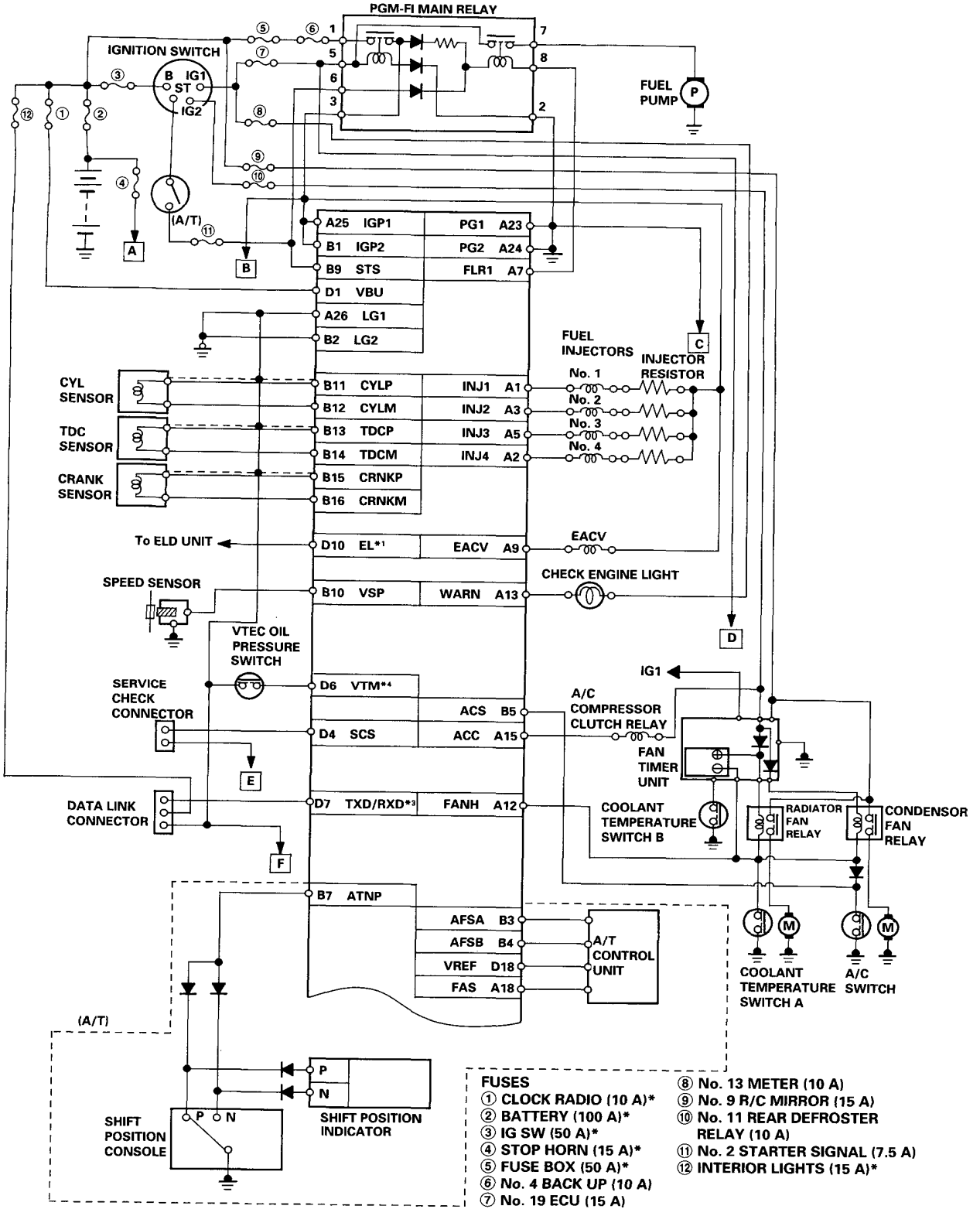

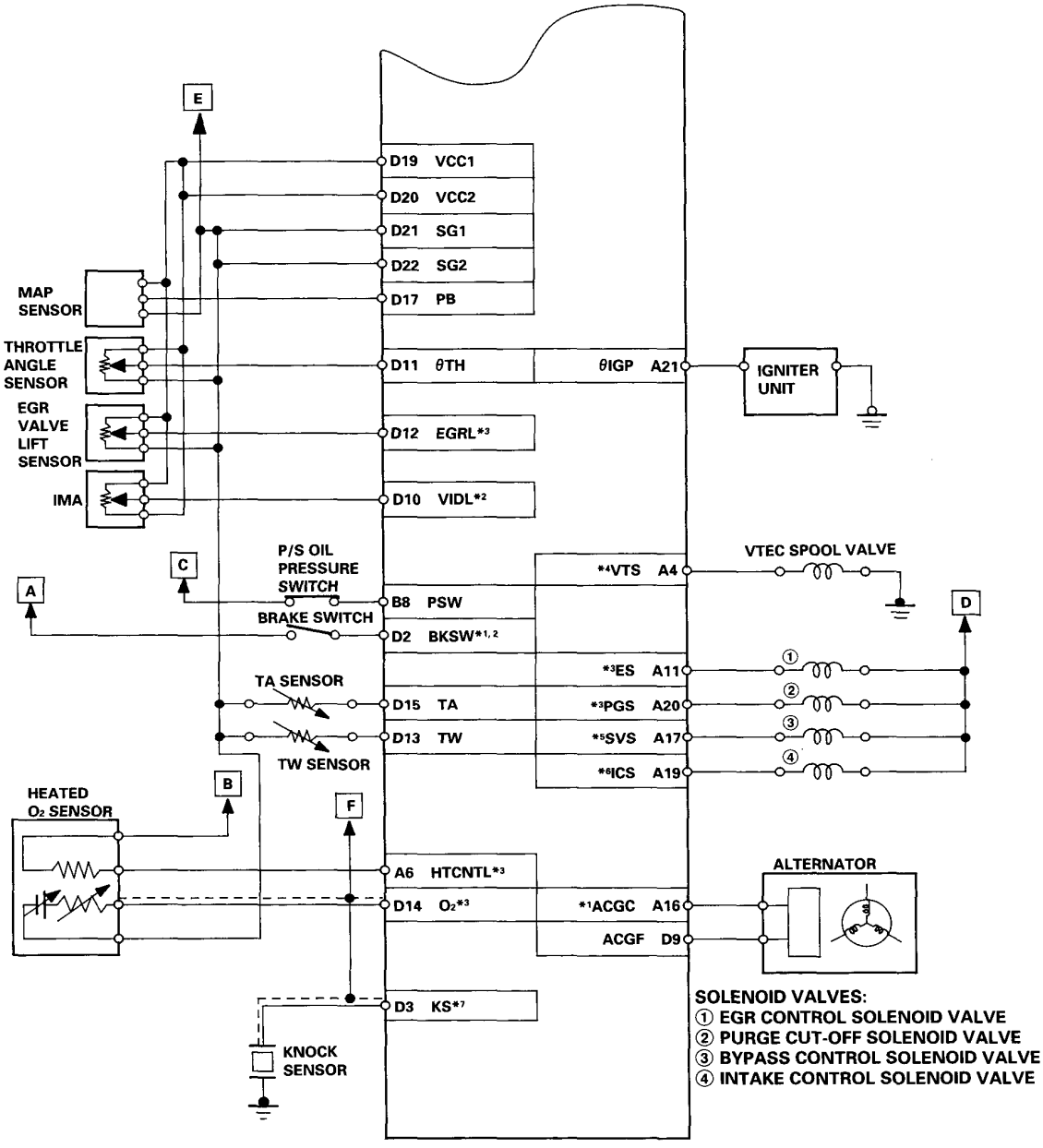

*1: KQ model only
*2: KY, KT model only (F22A2 engine)
*3: Except KY, KT model
*4: H22A1, H22A2 engine
*5: H22A1, H22A2, H23A1, H23A2 engine
*6: Except F22A1 engine
*7: H22A1, H23A1 engine

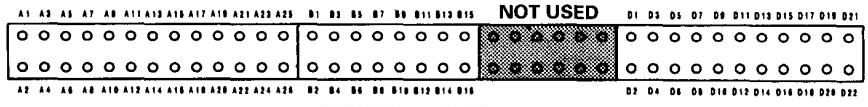

TERMINAL LOCATIONS

H22A1 engine:

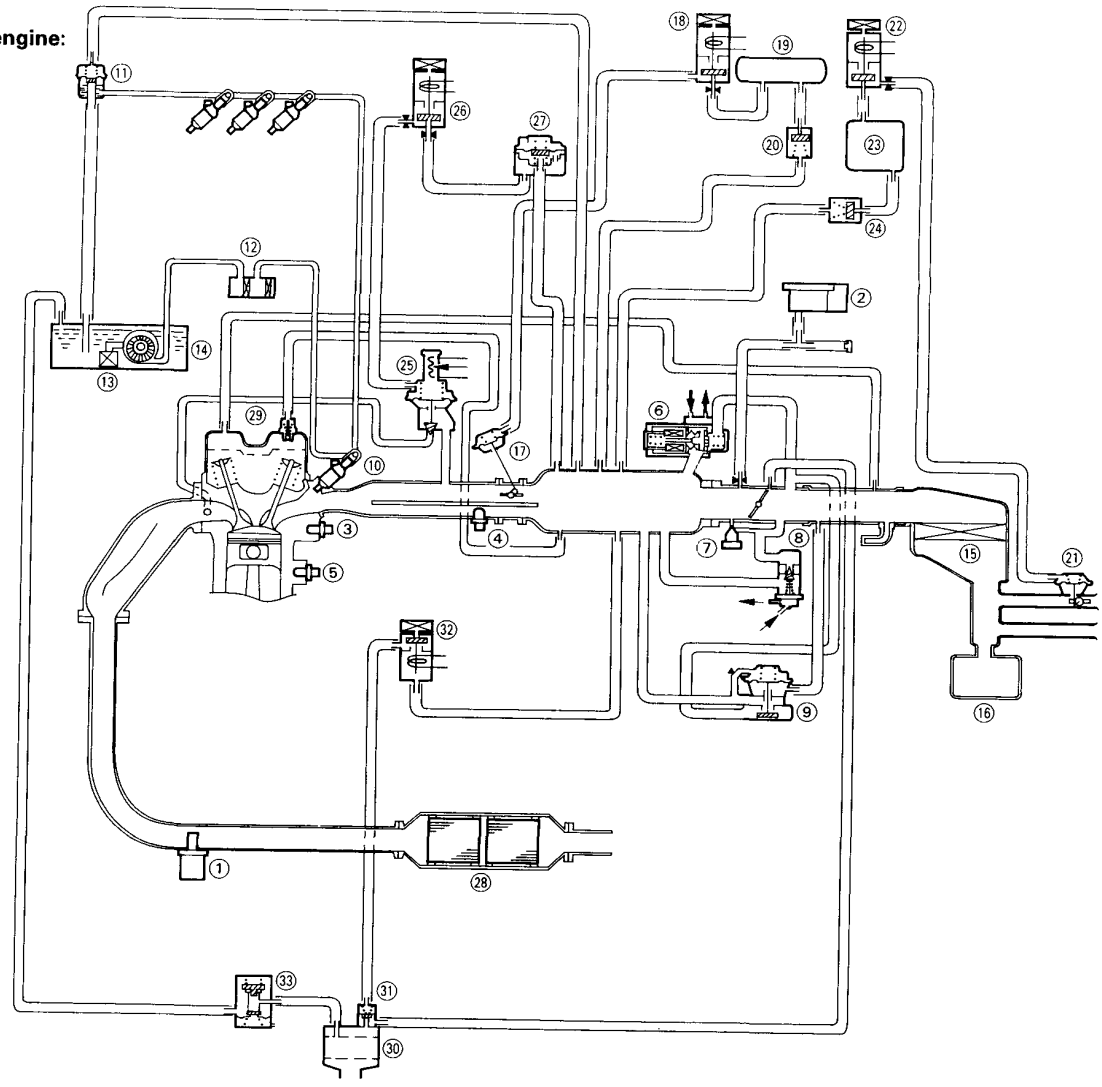

① HEATED OXYGEN (O_2) SENSOR
② MANIFOLD ABSOLUTE PRESSURE (MAP) SENSOR
③ COOLANT TEMPERATURE SENSOR
④ INTAKE AIR TEMPERATURE SENSOR
⑤ KNOCK SENSOR
⑥ ELECTRONIC AIR CONTROL VALVE (EACV)
⑦ IDLE ADJUSTING SCREW
⑧ FAST IDLE VALVE
⑨ AIR BOOST VALVE
⑩ FUEL INJECTOR
⑪ PRESSURE REGULATOR
⑫ FUEL FILTER
⑬ FUEL PUMP
⑭ FUEL TANK
⑮ AIR CLEANER
⑯ RESONATOR
⑰ BYPASS CONTROL DIAPHRAGM
⑱ BYPASS CONTROL SOLENOID VALVE
⑲ VACUUM TANK
⑳ CHECK VALVE
㉑ INTAKE CONTROL DIAPHRAGM
㉒ INTAKE CONTROL SOLENOID VALVE
㉓ VACUUM TANK
㉔ CHECK VALVE
㉕ EGR VALVE
㉖ EGR CONTROL SOLENOID VALVE
㉗ CONSTANT VACUUM CONTROL (CVC) VALVE
㉘ CATALYTIC CONVERTER
㉙ PCV VALVE
㉚ CHARCOAL CANISTER
㉛ PURGE CONTROL DIAPHRAGM VALVE
㉜ PURGE CONTROL SOLENOID VALVE
㉝ TWO-WAY VALVE

Self-diagnostic Procedures

SELF-DIAGNOSIS INDICATOR BLINKS	SYSTEM INDICATED	H22A1 ENGINE	H22A2 ENGINE	F20A4 H23A2 ENGINE	F22A1 ENGINE	F22A2 ENGINE	H23A1 ENGINE
0	ECU	○	○	○	○	○	○
1	OXYGEN SENSOR	○	○	○	○	x	○
3	MANIFOLD ABSOLUTE PRESSURE (MAP SENSOR)	○	○	○	○	○	○
5							
4	CRANK ANGLE (CRANK SENSOR)	○	○	○	○	○	○
6	COOLANT TEMPERATURE (TW SENSOR)	○	○	○	○	○	○
7	THROTTLE ANGLE	○	○	○	○	○	○
8	TDC POSITION (TDC SENSOR)	○	○	○	○	○	○
9	No. 1 CYLINDER POSITION (CYL SENSOR)	○	○	○	○	○	○
10	INTAKE AIR TEMPERATURE (TA SENSOR)	○	○	○	○	○	○
11	IMA	x	x	x	x	○	x
12	EXHAUST GAS RECIRCULATION SYSTEM (EGR)	○	○	○	○	x	○
13	ATMOSPHERIC PRESSURE (PA SENSOR)	○	○	○	○	○	○
14	ELECTRONIC AIR CONTROL (EACV)	○	○	○	○	○	○
15	IGNITION OUTPUT SIGNAL	11-8	11-8	11-8	11-8	11-8	11-8
16	FUEL INJECTOR	11-10	x	x	x	x	x
17	VEHICLE SPEED SENSOR	○	○	○	○	○	○
20	ELECTRICAL LOAD DETECTOR (ELD)	○	x	x	○	x	○
21	VARIABLE VALVE TIMING & VALVE LIFT ELECTRONIC CONTROL (VTEC) SPOOL VALVE	◎	◎	x	x	x	x
22	VARIABLE VALVE TIMING & VALVE LIFT ELECTRONIC CONTROL (VTEC) PRESSURE SWITCH	◎	◎	x	x	x	x
23	KNOCK SENSOR	○	x	x	x	x	○
30	A/T FI SIGNAL A	x	x	○	○	○	○
31	A/T FI SIGNAL B	x	x	○	○	○	○
41	OXYGEN SENSOR HEATER	○	○	○	○	x	○
43	FUEL SUPPLY SYSTEM	○	○	○	○	x	○

○: Refer to 62SS000
◎: Refer to 62SS010
x : Not Indicated

- If codes other than those listed above are indicated, verify the code. If the code indicated is not listed above, replace the ECU.
- The Check Engine Light may come on, indicating a system problem when, in fact, there is a poor or intermittent electrical connection. First, check the electrical connections, clean or repair connections if necessary.
- The Check Engine Light and [S] light may light simultaneously when the self-diagnosis indicator blinks 6, 7 and 17. Check the PGM-FI system according to the PGM-FI control system troubleshooting, then recheck the [S] light.
- The Check Engine Light does not come on when there is a malfunction in the A/T FI signal or Electrical Load Detector circuits. However, it will indicate the codes when the Service Check Connector is jumped.

Troubleshooting Flowchart — Ignition Output Signal

15 Self-diagnosis Check Engine Light indicates code 15: A problem in the Ignition Output Signal circuit.

— Check Engine Light has been reported on.
— With service check connector jumped CODE 15 is indicated.

Do the ECU Reset Procedure.

Start the engine.

NOTE: If the engine won't start, it may take 20 seconds of cranking to set the code.

H22A1, H22A2, H23A1, H23A2 engine:

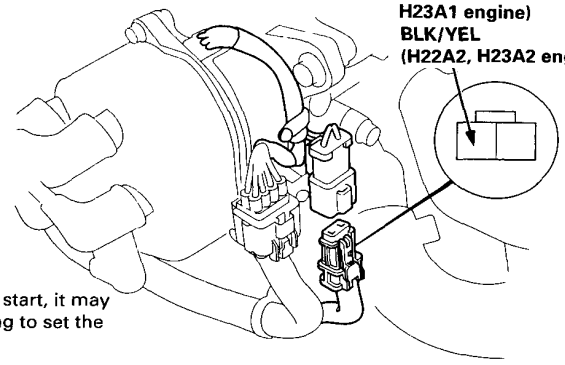

Is Check Engine Light on and does it indicate CODE 15?

NO → **Intermittent failure, system is OK at this time (test drive may be necessary). Check for poor connections or loose wires at igniter unit and ECU.**

YES

Turn the ignition switch OFF.

Disconnect the 2P connector at the distributor.

Turn the ignition switch ON.

Measure voltage between YEL or BLK/YEL* (+) terminal and body ground.

F20A4, F22A1, F22A2 engine:

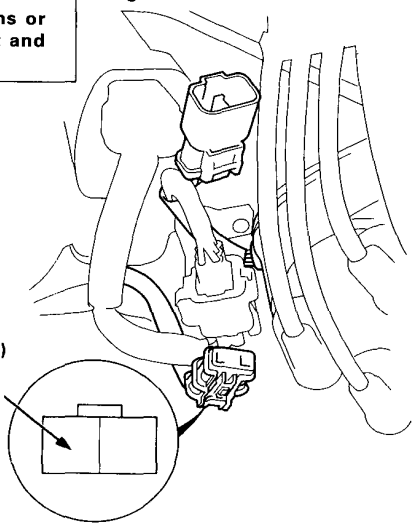

Is there battery voltage?

NO → **(H22A1, F22A1, H23A1 engine)** Test the ignition coil.

Is the ignition coil OK?

NO → **Replace the ignition coil.**

YES

— Repair open in YEL wire between the 2P connector and ignition coil (H22A1, F22A1, H23A1 engine).
— Repair open in BLK/YEL wire between the ignition coil and ignition switch (Except H22A1, F22A1, H23A1 engine).

YES

(To page 11-9)

*: F20A4, F22A2, H22A2, H23A2 engine

(From page 11-8)

Turn the ignition switch OFF.

Reconnect the 2P connector.

Connect the test harness between the ECU and connectors.

Turn the ignition switch ON.

Measure voltage between A21 (+), terminal and A26 (–) terminal.

Is there approx. 10 V?

NO

- **Replace the igniter unit.**
- **Repair open or short YEL/GRN wire between igniter unit and ECU (A21).**

YES

Substitute a known-good ECU and recheck. If symptom/indication goes away, replace the original ECU.

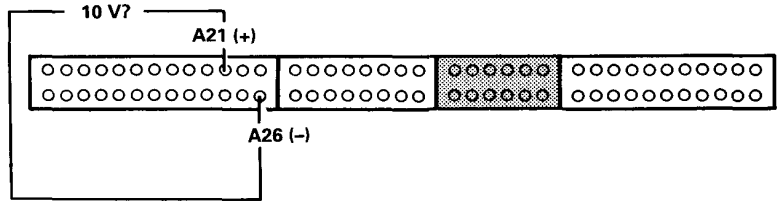

NOTE: If the YEL/GRN wire was shorted, *the igniter may be damaged.*

Troubleshooting Flowchart — Fuel Injectors

CHECK 16 Self-diagnosis Check Engine Light indicates code 16: A problem in the Fuel Injector circuit.

The Fuel Injectors are a solenoid-actuated constant-stroke pintle type consisting of a solenoid, plunger needle valve and housing. When current is applied to the solenoid coil, the valve lifts up and pressurized fuel is injected. Because the needle valve lift and the fuel pressure are constant, the injection quantity is determined by the length of time that the valve is open (i.e., the duration the current is supplied to the solenoid coil). The Fuel Injector is sealed by an O-ring and seal ring at the top and bottom. These seals also reduce operating noise.

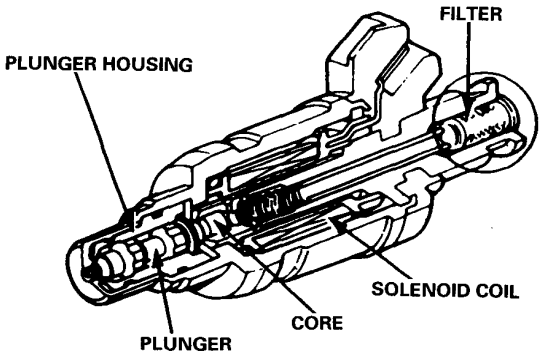

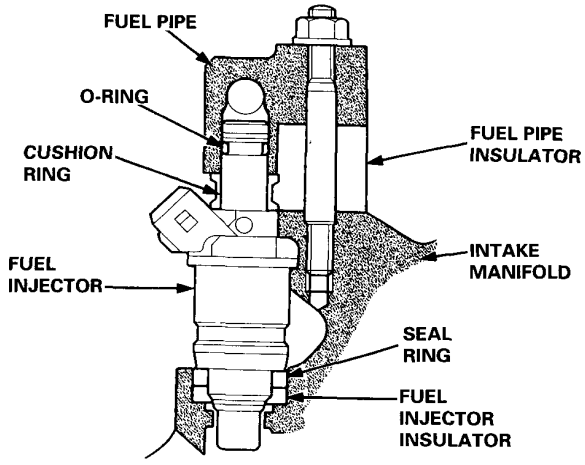

CHECK 16

— Check Engine Light has been reported on.
— With service check connector jumped CODE 16 is indicated.

Do the ECU Reset Procedure.

Start the engine and allow it to idle.

NOTE: If engine will not start, it may take 10 seconds of cranking to set the code.

Is Check Engine Light on and does it indicate CODE 16?

NO → **Intermittent failure, system is OK at this time (test drive may be necessary).**
Check for poor connections or loose wires between fuel injectors and ECU.

YES

Start engine and listen at each fuel injector for a clicking sound.

Turn the ignition switch OFF.

Disconnect the 2P connector from the fuel injector that does not click.

(To page 11-11)

(From page 11-10)

Measure resistance between the 2 terminals of fuel injector.

Is there 1.5 – 2.5 Ω?

NO → **Replace the fuel injector/injectors that are not 1.5 – 2.5 Ω.**

YES

Turn the ignition switch ON.

Measure voltage between RED/BLK (+) terminal in the 2P connector and body ground.

Is there battery voltage?

NO → Turn the ignition switch OFF.

Disconnect 6P connector from the injector resistor.

Turn the ignition switch ON.

Measure voltage between YEL/BLK (+) terminal and body ground.

Is there battery voltage?

NO → **Repair open in the YEL/BLK wire between the injector resistor and the PGM-FI main relay.**

YES

Test the injector resistor.

Does the injector resistor test OK?

NO → ***Replace the injector resistor.***

YES

Repair open RED/BLK wire between the 2P connector and injector resistor.

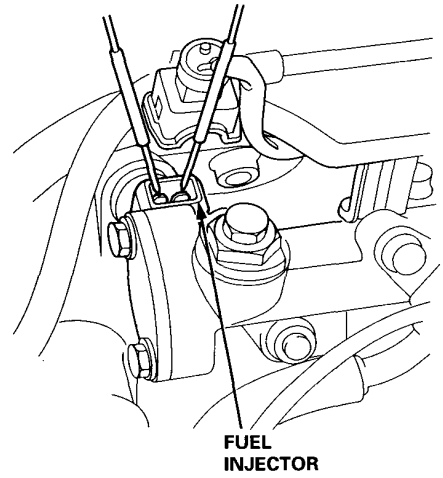

YES

Turn the ignition switch OFF.

Reconnect the 2P connector to the fuel injector.

Connect the test harness between the ECU and connectors.

Turn the ignition switch ON.

Measure voltage between A23 (–) terminal and following terminal:
- No. 1 fuel injector: A1 (+) terminal.
- No. 2 fuel injector: A3 (+) terminal.
- No. 3 fuel injector: A5 (+) terminal
- No. 4 fuel injector: A2 (+) terminal.

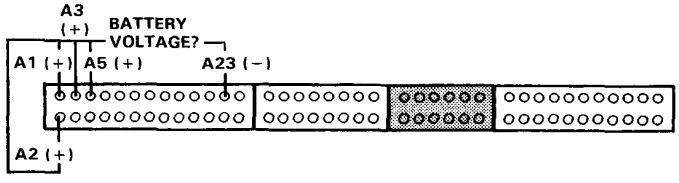

Is there battery voltage?

NO → **Repair open in the wire between the ECU and the fuel injector.**

YES

Substitute a known-good ECU and recheck. If symptom/indication goes away, replace the original ECU.

PGM-FI Main Relay

Troubleshooting Flowchart

— Engine will not start.
— Inspection of PGM-FI main relay.

Disconnect the PGM-FI main relay connector.

Check for continuity between BLK terminal ② and body ground.

Does continuity exist?
- NO → **Repair open in BLK wire between PGM-FI main relay and G101.**
- YES ↓

Measure the voltage between YEL/BLU terminal ① and body ground.

Is there battery voltage?
- NO → **— Replace No. 4 BACK UP (10 A) fuse.**
  — Repair open in the YEL/BLU wire between the PGM-FI main relay and the No. 4 BACK UP (10 A) fuse.
- YES ↓

Turn the ignition switch ON.

Measure the voltage between BLK/YEL terminal ⑤ and body ground.

Is there battery voltage?
- NO → **— Replace No. 19 ECU (15 A) fuse.**
  — Repair open in the BLK/YEL wire between the PGM-FI main relay and the No. 19 ECU (15 A) fuse.
- YES ↓

Turn the ignition switch to the START position.

Measure the voltage between BLU/RED terminal ⑥ and body ground.

Is there battery voltage?
- NO → **Repair open in the BLU/RED wire between the PGM-FI main relay and the ignition switch.**
- YES ↓

(To page 11-13)

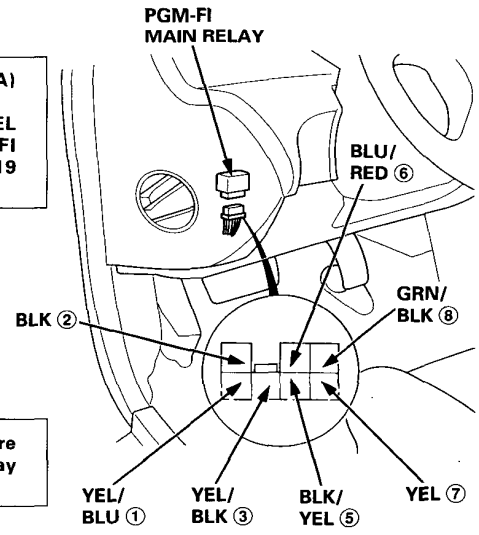

(From page 11-12)

Turn the ignition switch off.

Connect the test harness between the ECU and connectors. Disconnect "A" connector from the ECU only, not the main wire harness.

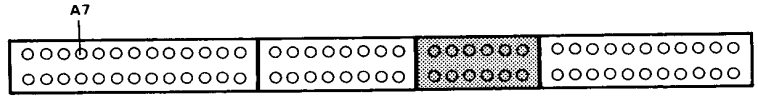

Check for continuity between GRN/BLK terminal ⑧ and A7 terminal.

Does continuity exist?

NO → **Repair open in GRN/BLK wire between ECU (A7) and PGM-FI main relay.**

YES

Reconnect "A" connector to the ECU.

Connect the PGM-FI main relay connector.

Turn the ignition switch ON.

Measure the voltage between A23 (–) terminal and the following terminals: A25 (+) B1 (+).

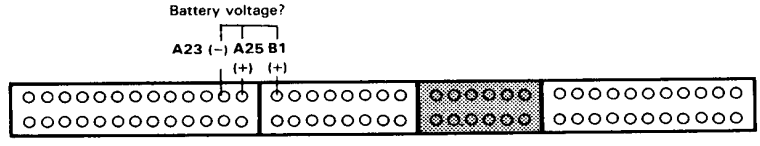

Is there battery voltage?

NO →
- **Repair open in the YEL/BLK ③ wire between the ECU (A25, B1) and PGM-FI main relay.**
- **Replace PGM-FI main relay.**

YES

Turn the ignition switch OFF.

Measure the voltage between A7 (+) terminal and A23 (–) terminal during the first two seconds after the ignition switch is turned ON.

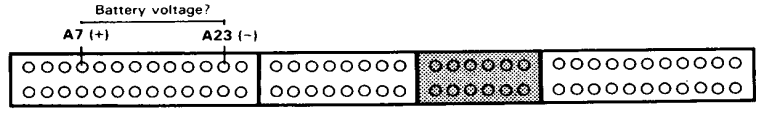

Is there 1.0 V or less?

NO → **Substitute a known-good ECU and recheck. If prescribed voltage is now available, replace the original ECU.**

YES

Check the PGM-FI main relay.

Idle Control System

Idle Speed Setting (H22A1 engine)

Inspection/Adjustment

NOTE:
- When the idle speed set, check the following items:
  - — The Check Engine Light has not been reported on.
  - — Ignition timing
  - — Spark plugs
  - — Air cleaner
  - — PCV system

1. Connect a tachometer.

2. Start the engine. Hold the engine at 3,000 rpm (min^{-1}) with no load (M/T in neutral) until the radiator fan comes on, then let it idle.

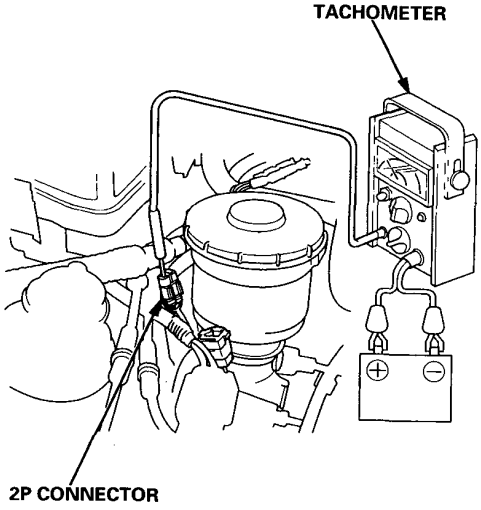

3. Disconnect the 2P connector from the EACV.

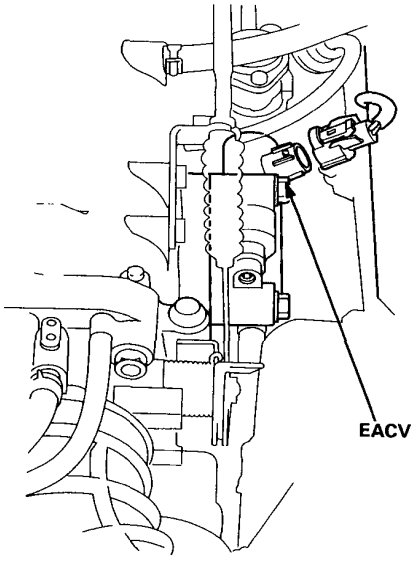

4. Start the engine with the accelerator pedal slightly depressed. Stabilize the engine speed at 1,000, then slowly release the pedal until the engine idles.

5. Check idling in no-load conditions: headlights, blower fan, rear defogger, cooling fan, and air conditioner are not operating.

   Idle speed should be:
   550 ± 50 min^{-1} (rpm)

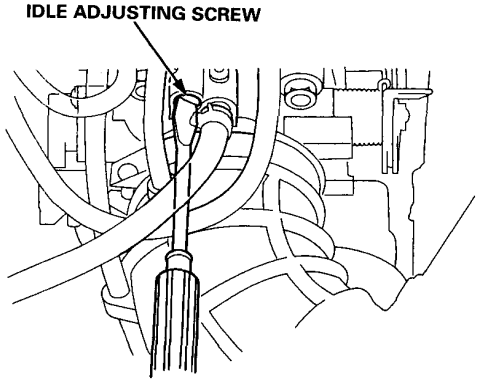

NOTE: After adjust the idle speed in this step, check the ignition timing. If it is out of spec., go back to step 4.

6. Turn the ignition switch OFF.

7. Reconnect the 2P connector on the EACV, then remove CLOCK RADIO (10 A) fuse in the underhood fuse/relay box for 10 seconds to reset the ECU.

8. Restart and idle the engine with no-load conditions for one minute, then check the idle speed.

   Idle speed should be:
   700 ± 50 min^{-1} (rpm)

9. Idle the engine for one minute with headlights (Hi) and rear defogger ON and check the idle speed.

   Idle speed should be:
   790 ± 50 min^{-1} (rpm)

10. Turn the headlights and rear defogger off.
    Idle the engine for one minute with heater fan switch at HI and air conditioner on, then check the idle speed.

    Idle speed should be:
    790 ± 50 min^{-1} (rpm)

    NOTE: If the idle speed is not within specification, see System Troubleshooting Guide.

Automatic Transmission

Special Tools 14-2
Circuit Diagram 14-4
Illustrated Index
  Right Side Cover 14-6
  Transmission Housing 14-8
  Torque Converter Housing 14-10
Right Side Cover
  Removal 14-12
Main Valve Body
  Disassembly/Inspection/
    Reassembly 14-14
Secondary Shaft
  Disassembly/Inspection/
    Reassembly 14-16
  Inspection 14-17
Clutch
  Illustrated Index 14-18
Transmission
  Reassembly 14-22
Throttle Control Cable
  Inspection 14-30
  Adjustment 14-32

Outline of Model Changes

- Circuit diagram has been modified.
- The following items of the transmission have been changed.
  - Reverse idler gear shaft and holder
  - Main valve body assembly
  - Secondary shaft assembly
  - Clutch discs and pistons
- Right side cover protector has been discontinued.
- Throttle control cable inspection and adjustment have been changed.

Special Tools

Ref. No	Tool Number	Description	Qty	Page Reference
①	07GAB–PF50101	Mainshaft Holder	1	14-12, 26
②	07HAF–PK40100	Gear Installer	1	14-28

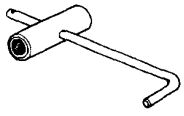

①

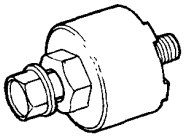

②

Circuit Diagram

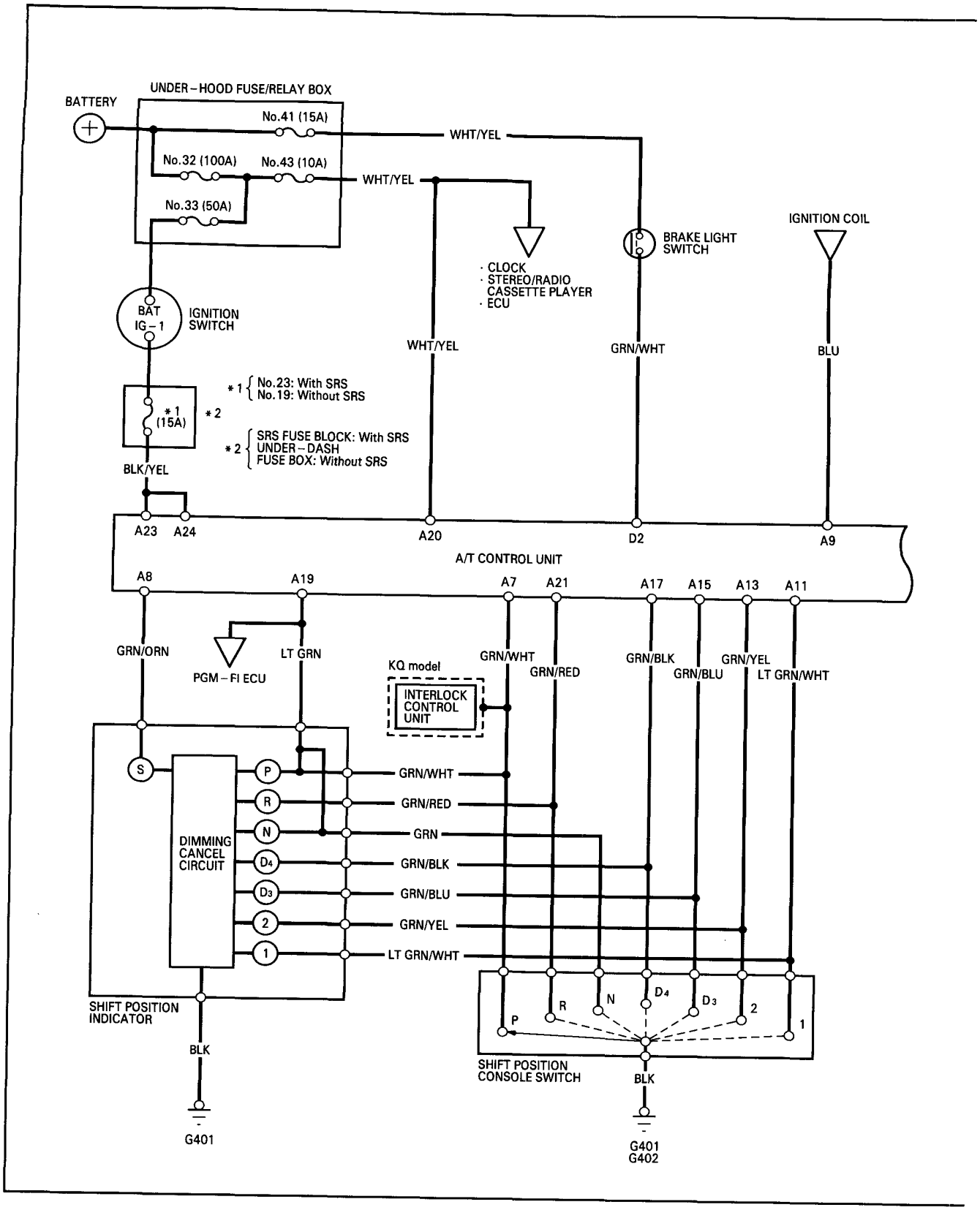

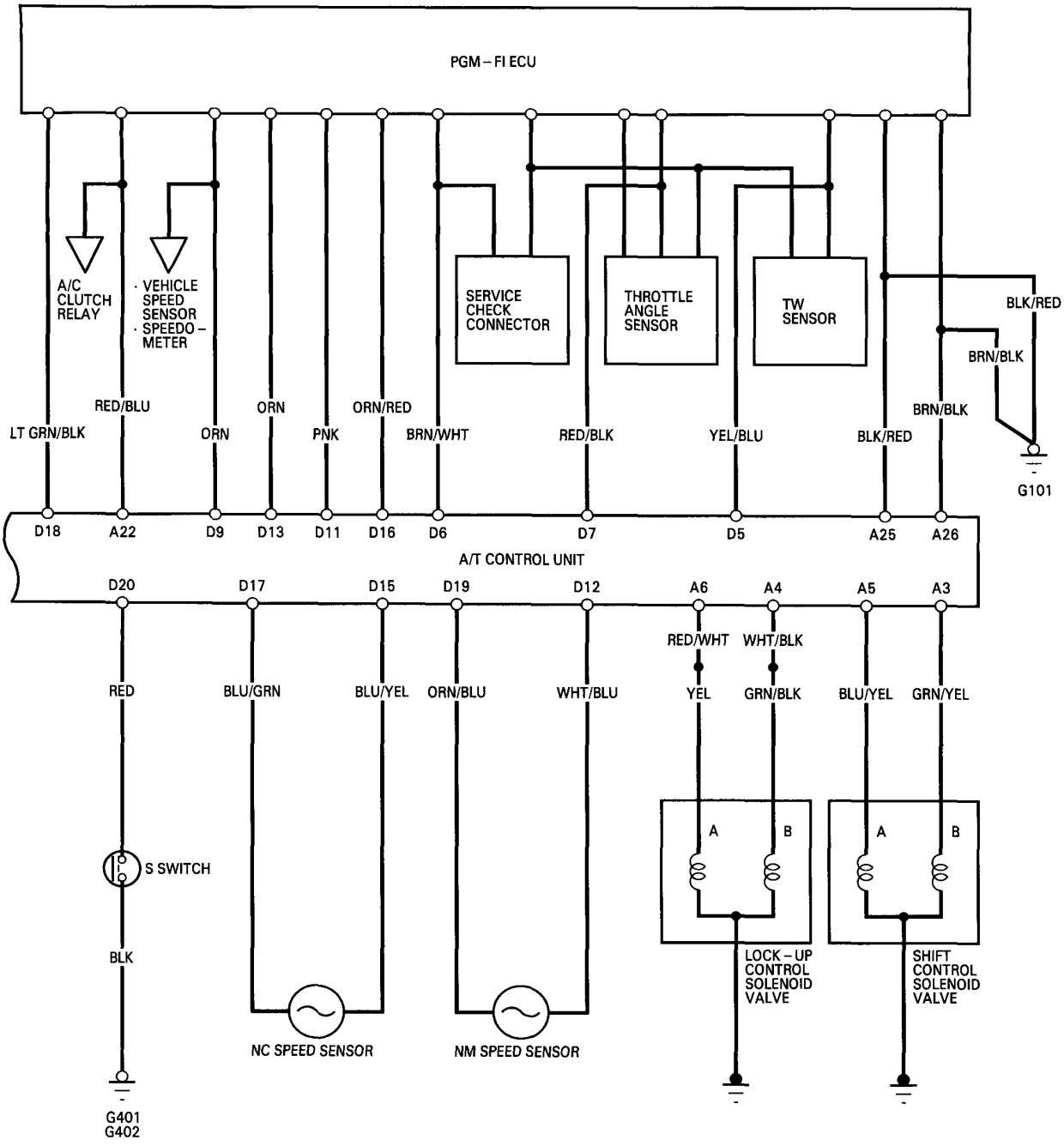

	A3	A5	A7	A9	A11	A13	A15	A17	A19	A21	A23	A25
	A4	A6	A8						A20	A22	A24	A26

		D5	D7	D9	D11	D13	D15	D17	D19	
D2		D6			D12		D16	D18	D20	

A/T Control Unit Terminal Location

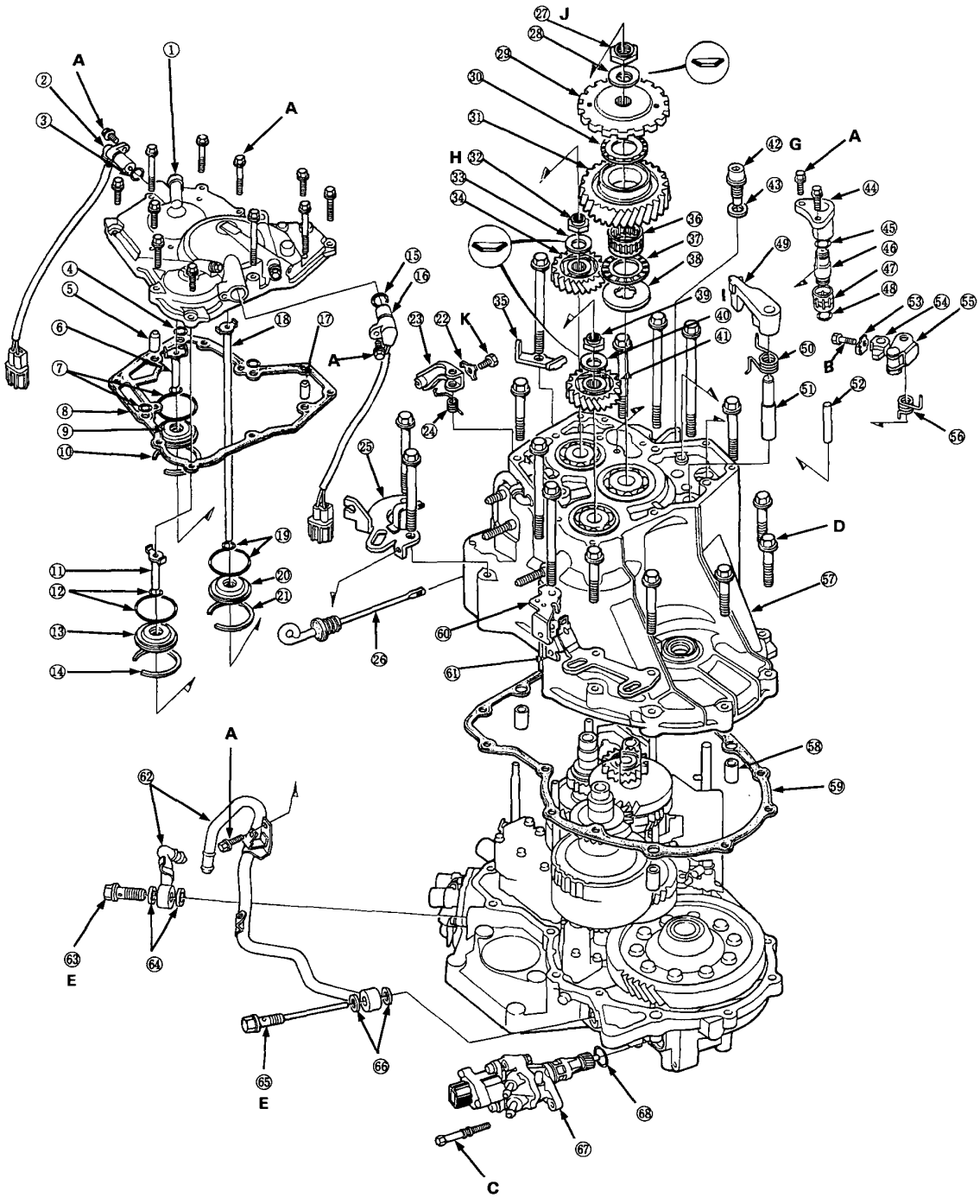
A
A
A
A
A
B
C
D
E
E
G
H
I
J
K

①RIGHT SIDE COVER
②MAINSHAFT (NM) SPEED SENSOR
③O-RING Replace.
④O-RING Replace.
⑤DOWEL PIN
⑥4TH CLUTCH FEED PIPE
⑦O-RINGS Replace.
⑧RIGHT SIDE COVER GASKET Replace.
⑨FEED PIPE GUIDE
⑩SNAP RING
⑪1ST CLUTCH FEED PIPE
⑫O-RINGS Replace.
⑬FEED PIPE GUIDE
⑭SNAP RING
⑮O-RING Replace.
⑯COUNTERSHAFT (NC) SPEED SENSOR
⑰DOWEL PIN
⑱1ST-HOLD CLUTCH FEED PIPE
⑲O-RINGS Replace.
⑳FEED PIPE GUIDE
㉑SNAP RING
㉒LOCK WASHER Replace.
㉓THROTTLE CONTROL LEVER
㉔THROTTLE CONTROL LEVER SPRING
㉕THROTTLE CONTROL CABLE STAY/ TRANSMISSION HANGER
㉖ATF LEVEL GAUGE
㉗COUNTERSHAFT LOCKNUT, 24 x 1.25 mm (Flange nut) Replace.
㉘CONICAL SPRING WASHER Replace.
㉙PARKING GEAR
㉚THRUST NEEDLE BEARING
㉛COUNTERSHAFT 1ST GEAR
㉜MAINSHAFT LOCKNUT, 24 x 1.25 mm (Flange nut) Replace.
㉝CONICAL SPRING WASHER Replace.
㉞MAINSHAFT IDLER GEAR
㉟HARNESS STAY
㊱NEEDLE BEARING
㊲THRUST NEEDLE BEARING
㊳THRUST WASHER
㊴SECONDARY SHAFT LOCKNUT, 24 x 1.25 mm (Flange nut) Replace.
㊵CONICAL SPRING WASHER Replace.
㊶SECONDARY SHAFT IDLER GEAR
㊷DRAIN PLUG
㊸SEALING WASHER Replace.
㊹REVERSE IDLER GEAR SHAFT HOLDER
㊺O-RING Replace.
㊻REVERSE IDLER GEAR SHAFT
㊼NEEDLE BEARING
㊽O-RING Replace.
㊾PARKING BRAKE PAWL
㊿PARKING BRAKE PAWL SPRING
(51)PARKING BRAKE PAWL SHAFT
(52)PARKING BRAKE PAWL STOPPER
(53)LOCK WASHER Replace.
(54)PARKING BRAKE STOPPER
(55)PARKING BRAKE LEVER
(56)PARKING BRAKE LEVER SPRING
(57)TRANSMISSION HOUSING
(58)DOWEL PIN
(59)TRANSMISSION HOUSING GASKET Replace.
(60)HARNESS CLAMP STAY
(61)TRANSMISSION HANGER
(62)ATF COOLER PIPES
(63)JOINT BOLT
(64)SEALING WASHERS Replace.
(65)JOINT BOLT
(66)SEALING WASHERS Replace.
(67)VEHICLE SPEED SENSOR/POWER STEERING SPEED SENSOR
(68)O-RING Replace.

TORQUE SPECIFICATIONS

Ref No.	Torque Value	Bolt Size	Remarks
A	12 N·m (1.2 kg-m , 9 lb-ft)	6 x 1.0 mm	
B	14 N·m (1.4 kg-m , 10 lb-ft)	6 x 1.0 mm	
C	18 N·m (1.8 kg-m , 13 lb-ft)	8 x 1.25 mm	
D	55 N·m (5.5 kg-m , 40 lb-ft)	10 x 1.25 mm	
E	29 N·m (2.9 kg-m , 21 lb-ft)	12 x 1.25 mm	Joint Bolt
G	50 N·m (5.0 kg-m , 36 lb-ft)	18 x 1.5 mm	Drain Plug
H	230 N·m (23.0 kg-m , 166 lb-ft) → 0 → 170 N·m (17.0 kg-m , 123 lb-ft)	24 x 1.25 mm	Mainshaft Locknut Left-hand threads
I	230 N·m (23.0 kg-m , 166 lb-ft) → 0 → 170 N·m (17.0 kg-m , 123 lb-ft)	24 x 1.25 mm	Secondary Shaft Locknut
J	230 N·m (23.0 kg-m , 166 lb-ft) → 0 → 170 N·m (17.0 kg-m , 123 lb-ft)	24 x 1.25 mm	Countershaft Locknut
K	8 N·m (0.8 kg-m , 5.8 lb-ft)	5 x 0.8 mm	

Transmission Housing

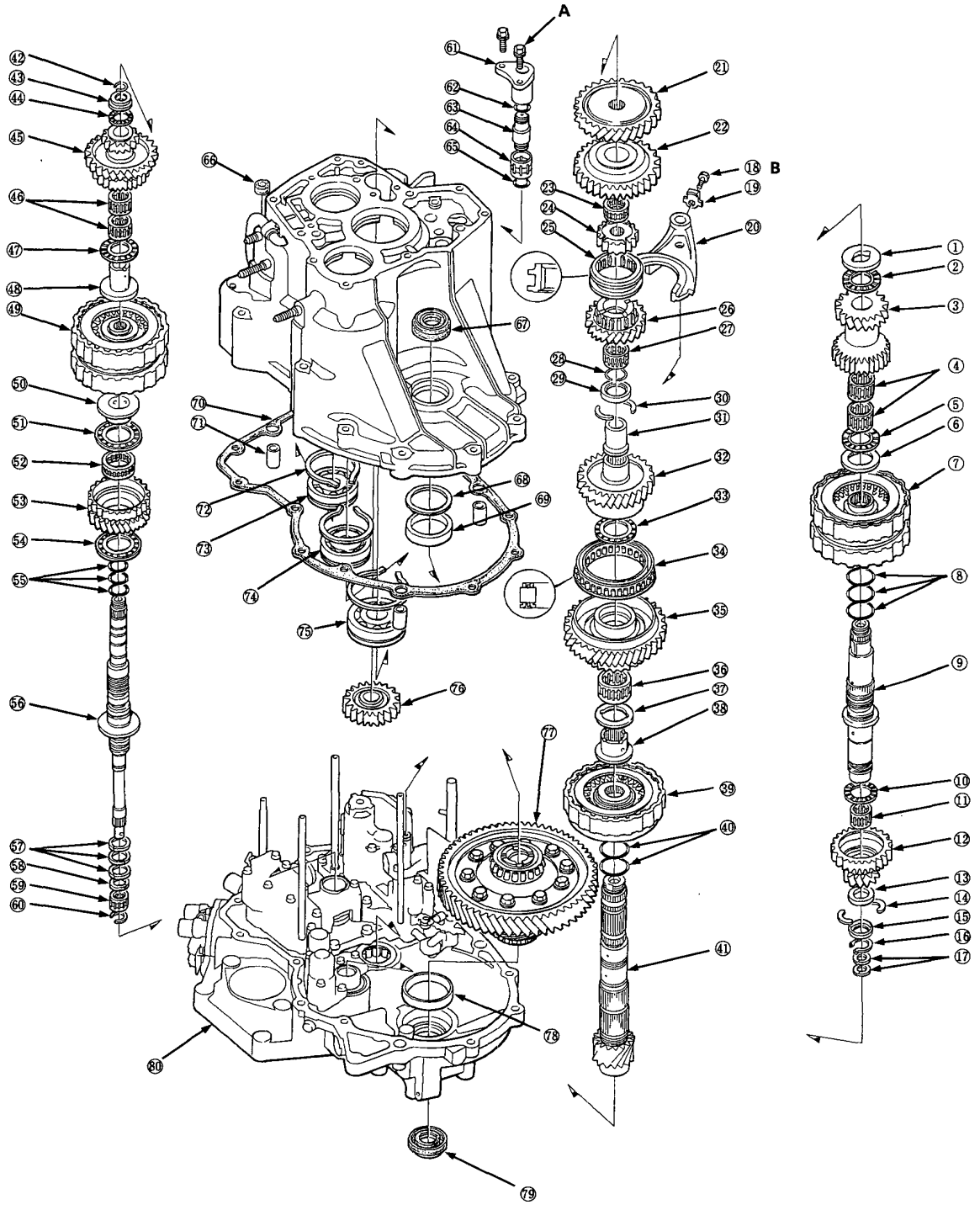

①THRUST WASHER
②THRUST NEEDLE BEARING
③SECONDARY SHAFT 2ND GEAR
④NEEDLE BEARINGS
⑤THRUST NEEDLE BEARING
⑥SPLINED WASHER Slective part
⑦1ST/2ND CLUTCH ASSEMBLY
⑧O-RINGS Replace.
⑨SECONDARY SHAFT
⑩THRUST NEEDLE BEARING
⑪NEEDLE BEARING
⑫SECONDARY SHAFT 1ST GEAR
⑬DISTANCE COLLAR, 5.0 mm
⑭COTTERS, 29 mm
⑮COTTER RETAINER
⑯SNAP RING
⑰SEALING RINGS, 32 mm
⑱LOCK BOLT
⑲LOCK WASHER Replace.
⑳SHIFT FORK
㉑COUNTERSHAFT 2ND GEAR
㉒COUNTERSHAFT REVERSE GEAR
㉓NEEDLE BEARING
㉔REVERSE SELECTOR HUB
㉕REVERSE SELECTOR
㉖COUNTERSHAFT 4TH GEAR
㉗NEEDLE BEARING
㉘SNAP RING
㉙COLLAR, 32 mm
㉚COTTERS, 29 mm
㉛DISTANCE COLLAR
㉜COUNTERSHAFT 3RD GEAR
㉝THRUST NEEDLE BEARING
㉞ONE-WAY CLUTCH
㉟COUNTERSHAFT 1ST GEAR
㊱NEEDLE BEARING
㊲THRUST WASHER
㊳COUNTERSHAFT 1ST GEAR COLLAR
㊴1ST-HOLD CLUTCH ASSEMBLY
㊵O-RINGS Replace.
㊶COUNTERSHAFT
㊷SNAP RING
㊸COLLAR
㊹THRUST NEEDLE BEARING
㊺MAINSHAFT 4TH/REVERSE GEAR
㊻NEEDLE BEARINGS
㊼THRUST NEEDLE BEARING
㊽4TH GEAR COLLAR
㊾3RD/4TH CLUTCH ASSEMBLY
㊿3RD GEAR COLLAR
51THRUST NEEDLE BEARING
52NEEDLE BEARING
53MAINSHAFT 3RD GEAR
54THRUST NEEDLE BEARING
55O-RINGS Replace.
56MAINSHAFT
57SEALING RINGS, 35 mm
58SEALING RING, 29 mm
59NEEDLE BEARING
60SET RING
61REVERSE IDLER GEAR SHAFT HOLDER
62O-RING Replace.
63REVERSE IDLER GEAR SHAFT
64NEEDLE BEARING
65O-RING Replace.
66OIL SEAL Replace.
67TRANSMISSION HOUSING OIL SEAL Replace.
68THRUST SHIM Selective part
69BEARING OUTER RACE
70TRANSMISSION HOUSING GASKET Replace.
71DOWEL PIN
72SNAP RING
73TRANSMISSION HOUSING MAINSHAFT BEARING
74TRANSMISSION HOUSING SECONDARY SHAFT BEARING
75TRANSMISSION HOUSING COUNTERSHAFT BEARING
76REVERSE IDLER GEAR
77DIFFERENTIAL ASSEMBLY
78BEARING OUTER RACE
79TORQUE CONVERTER HOUSING OIL SEAL Replace.
80TORQUE CONVERTER HOUSING

TORQUE SPECIFICATIONS

Ref No.	Torque Value	Bolt Size	Remarks
A	12 N·m (1.2 kg-m , 9 lb-ft)	6 x 1.0 mm	
B	14 N·m (1.4 kg-m , 10 lb-ft)	6 x 1.0 mm	

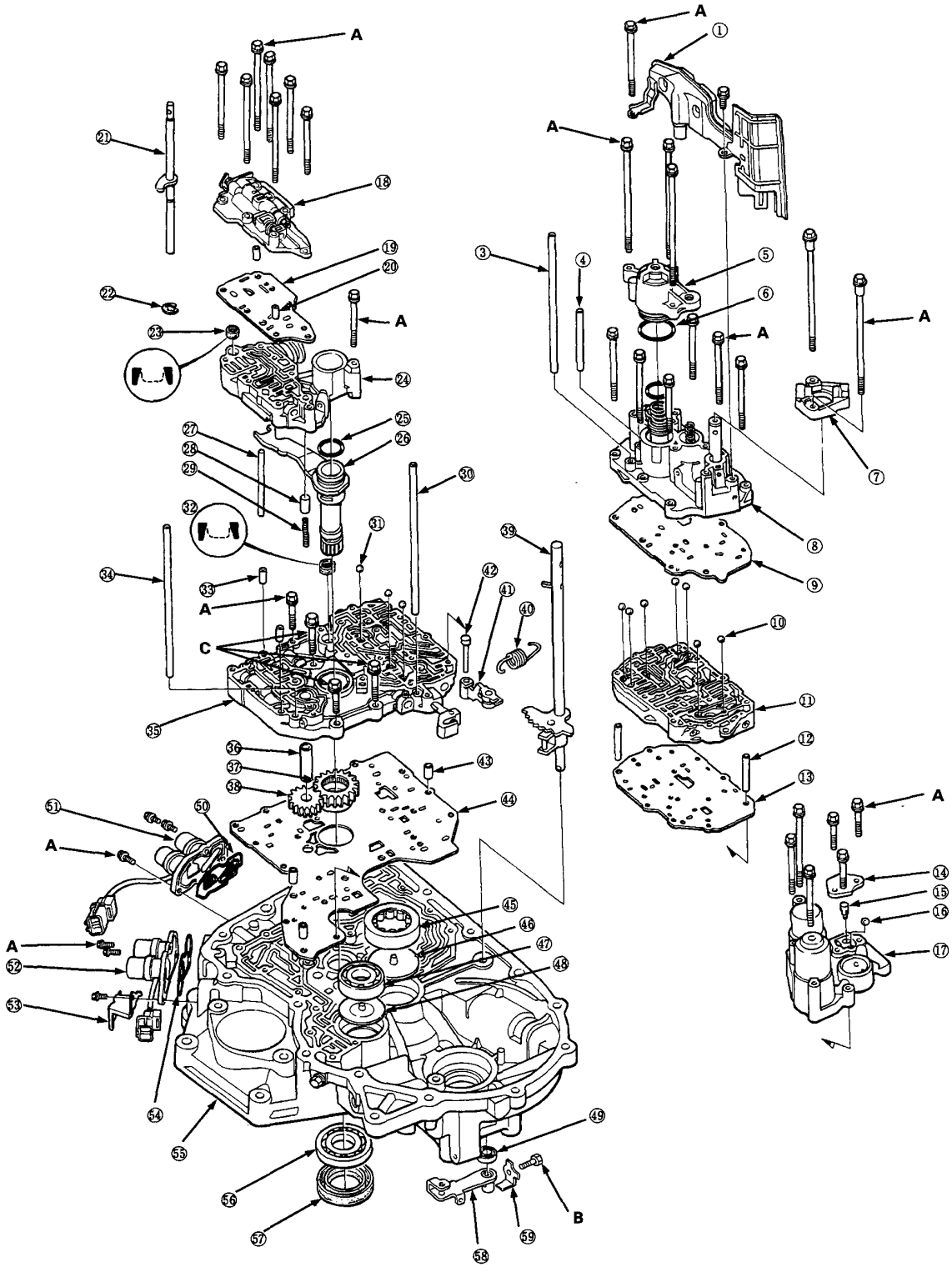
A
1
A
A
21
18
19
20
3
4
5
6
22
23
A
A
A
24
25
26
27
28
29
30
7
32
31
8
39
9
34
33
42
41
40
A
10
C
11
35
12
36
37
43
13
38
44
A
51
50
A
14
15
16
45
46
A
47
17
52
48
53
54
49
55
56
B
57
59
58

①ATF STRAINER
③OIL FEED PIPE
④OIL FEED PIPE
⑤4TH ACCUMULATOR COVER
⑥O-RING Replace.
⑦SERVO DETENT BASE
⑧SERVO BODY
⑨SERVO SEPARATOR PLATE
⑩CHECK BALL
⑪SECONDARY VALVE BODY
⑫DOWEL PIN
⑬SECONDARY SEPARATOR PLATE
⑭ACCUMULATOR BODY COVER
⑮1ST ACCUMULATOR CHOKE
⑯CHECK BALL
⑰1ST/2ND ACCUMULATOR BODY
⑱THROTTLE VALVE BODY
⑲THROTTLE SEPARATOR PLATE
⑳DOWEL PIN
㉑THROTTLE CONTROL SHAFT
㉒E-RING Replace.
㉓FILTER Replace.
㉔REGULATOR VALVE BODY
㉕O-RING Replace.
㉖STATOR SHAFT
㉗STOPPER SHAFT
㉘TORQUE CONVERTER CHECK VALVE
㉙TORQUE CONVERTER CHECK VALVE SPRING
㉚OIL FEED PIPE
㉛CHECK BALL
㉜FILTER Replace.
㉝DOWEL PIN
㉞OIL FEED PIPE
㉟MAIN VALVE BODY
㊱OIL PUMP DRIVEN GEAR SHAFT
㊲OIL PUMP DRIVE GEAR
㊳OIL PUMP DRIVEN GEAR
㊴CONTROL SHAFT
㊵DETENT SPRING
㊶DETENT ARM
㊷DETENT ARM SHAFT
㊸DOWEL PIN
㊹MAIN SEPARATOR PLATE
㊺COUNTERSHAFT NEEDLE BEARING
㊻OIL GUIDE PLATE
㊼SECONDARY SHAFT BALL BEARING
㊽OIL GUIDE PLATE
㊾OIL SEAL Replace.
㊿SHIFT CONTROL SOLENOID FILTER/GASKET Replace.
(51)SHIFT CONTROL SOLENOID VALVE ASSEMBLY
(52)LOCK-UP CONTROL SOLENOID VALVE ASSEMBLY
(53)CONNECTOR HOLDER
(54)LOCK-UP CONTROL SOLENOID FILTER/GASKET Replace.
(55)TORQUE CONVERTER HOUSING
(56)MAINSHAFT BALL BEARING
(57)OIL SEAL Replace.
(58)CONTROL LEVER
(59)LOCK WASHER Replace.

TORQUE SPECIFICATIONS

Ref No.	Torque Value	Bolt Size	Remarks
A	12 N·m (1.2 kg-m, 9 lb-ft)	6 x 1.0 mm	
B	14 N·m (1.4 kg-m, 10 lb-ft)	6 x 1.0 mm	
C	18 N·m (1.8 kg-m, 13 lb-ft)	8 x 1.25 mm	

Right Side Cover

Removal

NOTE:
- Clean all parts thoroughly in solvent or carburetor cleaner and dry with compressed air.
- Blow out all passages.
- When removing the transmission right side cover, replace the following:
  - Right side cover gasket
  - Lock washers
  - Transmission housing gasket
  - O-rings
  - Each shaft locknut and conical spring washer
  - Sealing washers

1. Remove the eleven bolts securing the right side cover, then remove the right side cover.
2. Slip the special tool onto the mainshaft.

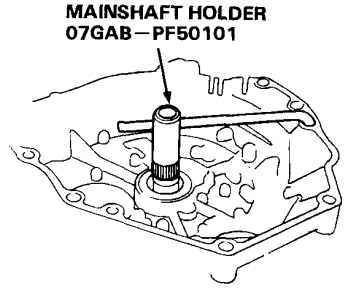

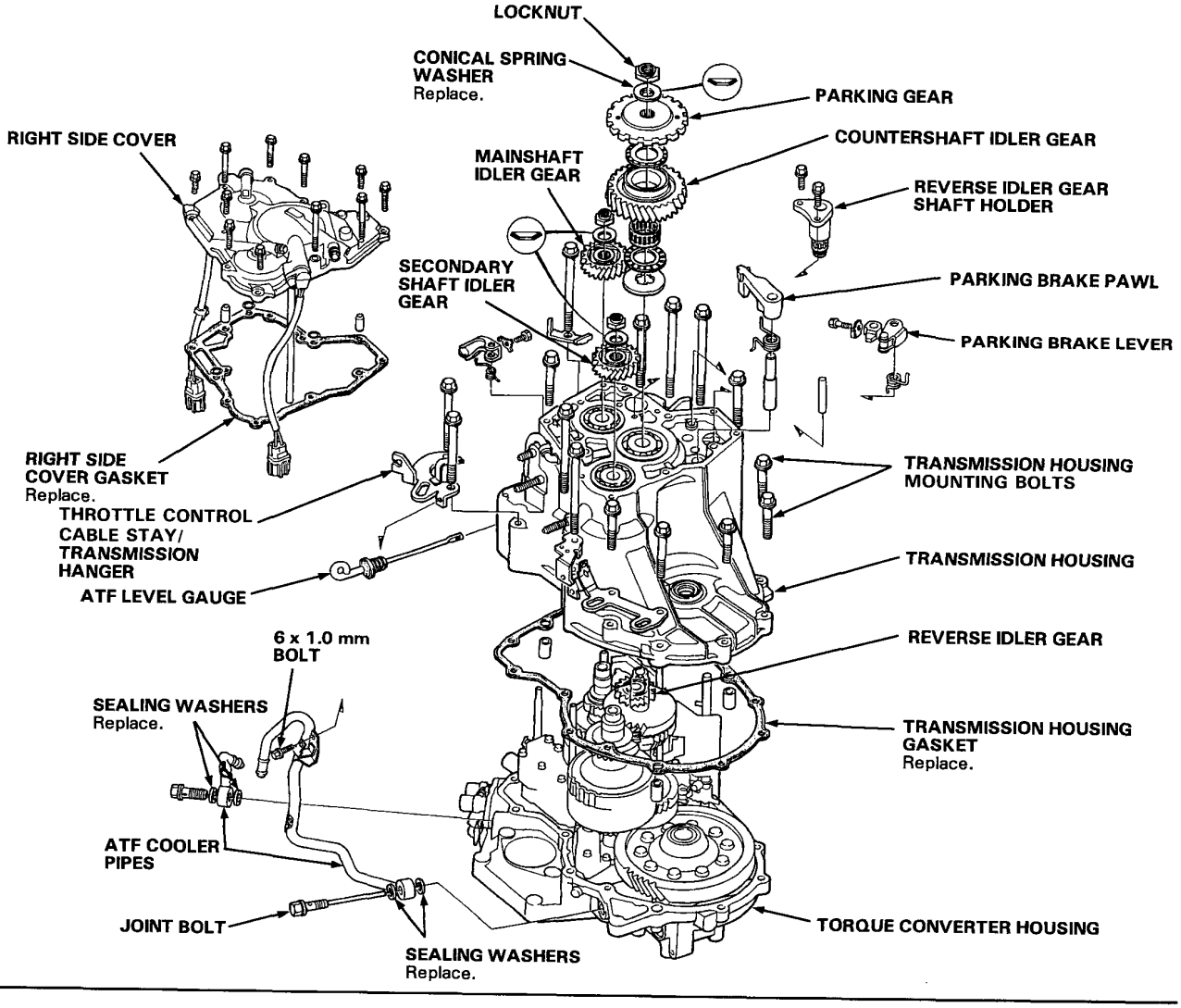

3. Engage the parking brake pawl with the parking gear.

4. Cut the lock tabs of each shaft locknut using a chisel as shown. Then remove the locknuts and conical spring washers from each shaft.

   NOTE:
   - Mainshaft locknut has left-hand threads.
   - Clean the old locknuts; they are used to install the press fit idler gears on the mainshaft and secondary shaft and the parking gear on the countershaft.
   - Always wear safety glasses.

   CAUTION:
   Keep all of the chiseled particles out of the transmission.

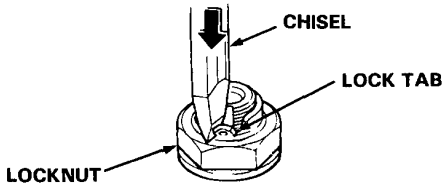

5. Remove the special tool from the mainshaft after removing the locknuts.

6. Remove the parking gear using a puller from the countershaft as shown. Then remove the idler gears from the mainshaft and secondary shaft using a puller.

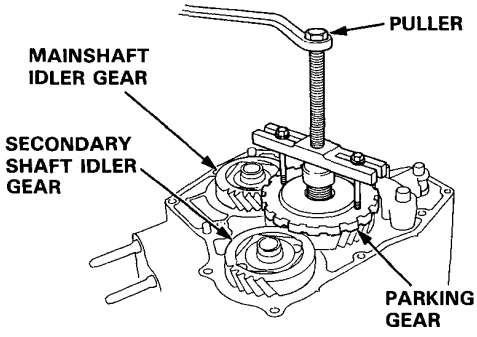

7. Remove the countershaft idler gear, needle bearing, thrust needle bearing, and thrust washer from the countershaft.

8. Remove the parking brake pawl, spring, shaft, and stopper from the housing.

9. Remove the throttle control lever and spring from the throttle control shaft.

10. Remove the ATF cooler pipe mounting bolt from the transmission hanger.

11. Remove the transmission housing mounting bolts.

12. Remove the reverse idler gear shaft and reverse idler gear shaft holder using a 5 x 0.8 mm bolt as shown.

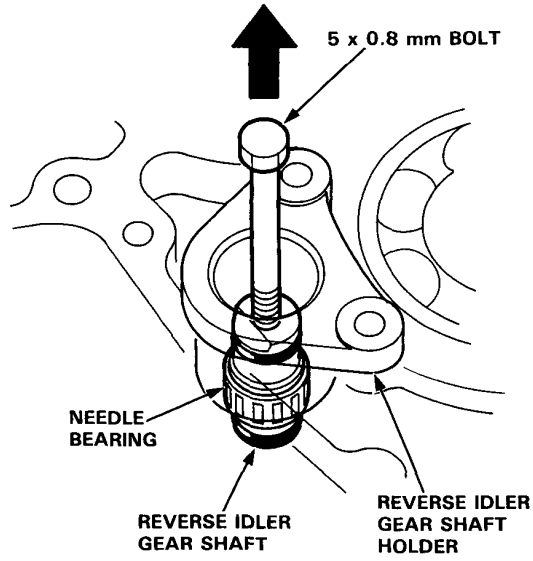

13. Move the reverse idler gear to disengage it from the countershaft and mainshaft reverse gears as shown.

    NOTE:
    The transmission housing will not separate from the torque converter housing if the reverse idler gear is not removed.

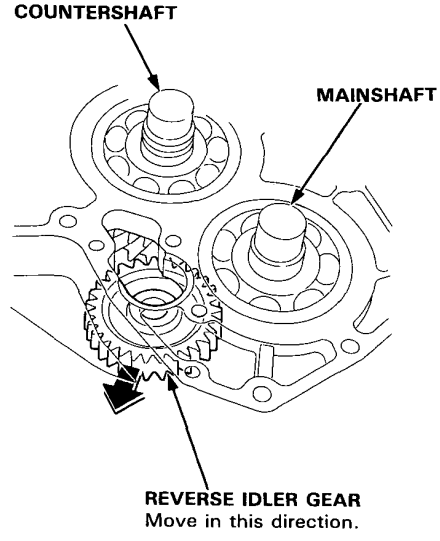

Main Valve Body

Disassembly/Inspection/Reassembly

NOTE:
- Clean all parts thoroughly in solvent or carburetor cleaner, and dry with compressed air. Blow out all passages.
- Replace valve body as an assembly if any parts are worn or damaged.
- Check all valves for free movement. If any fail to slide freely, see Valve Body Repair.

CAUTION:
Do not use a magnet to remove the check balls; it may magnetize the balls.

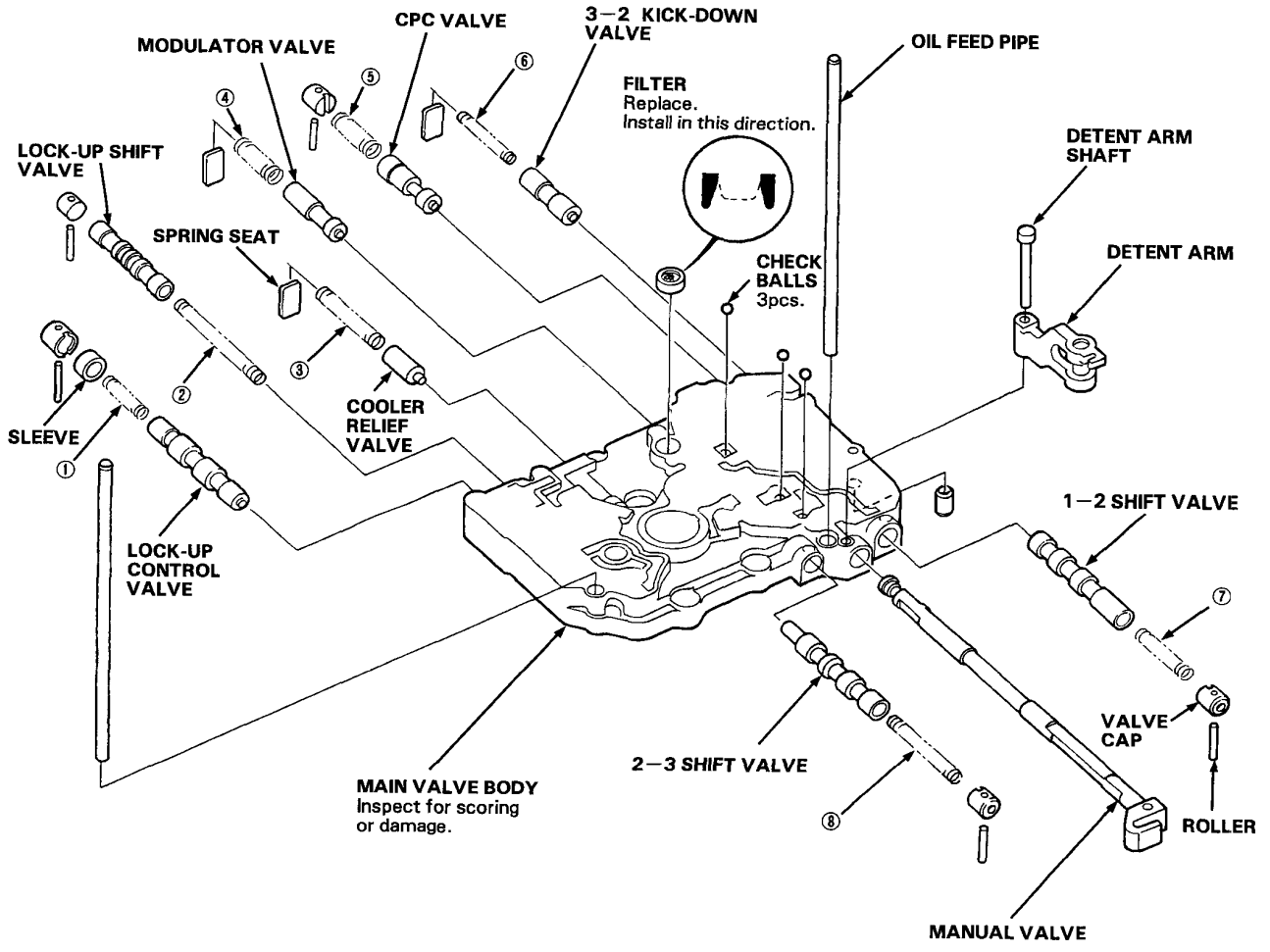

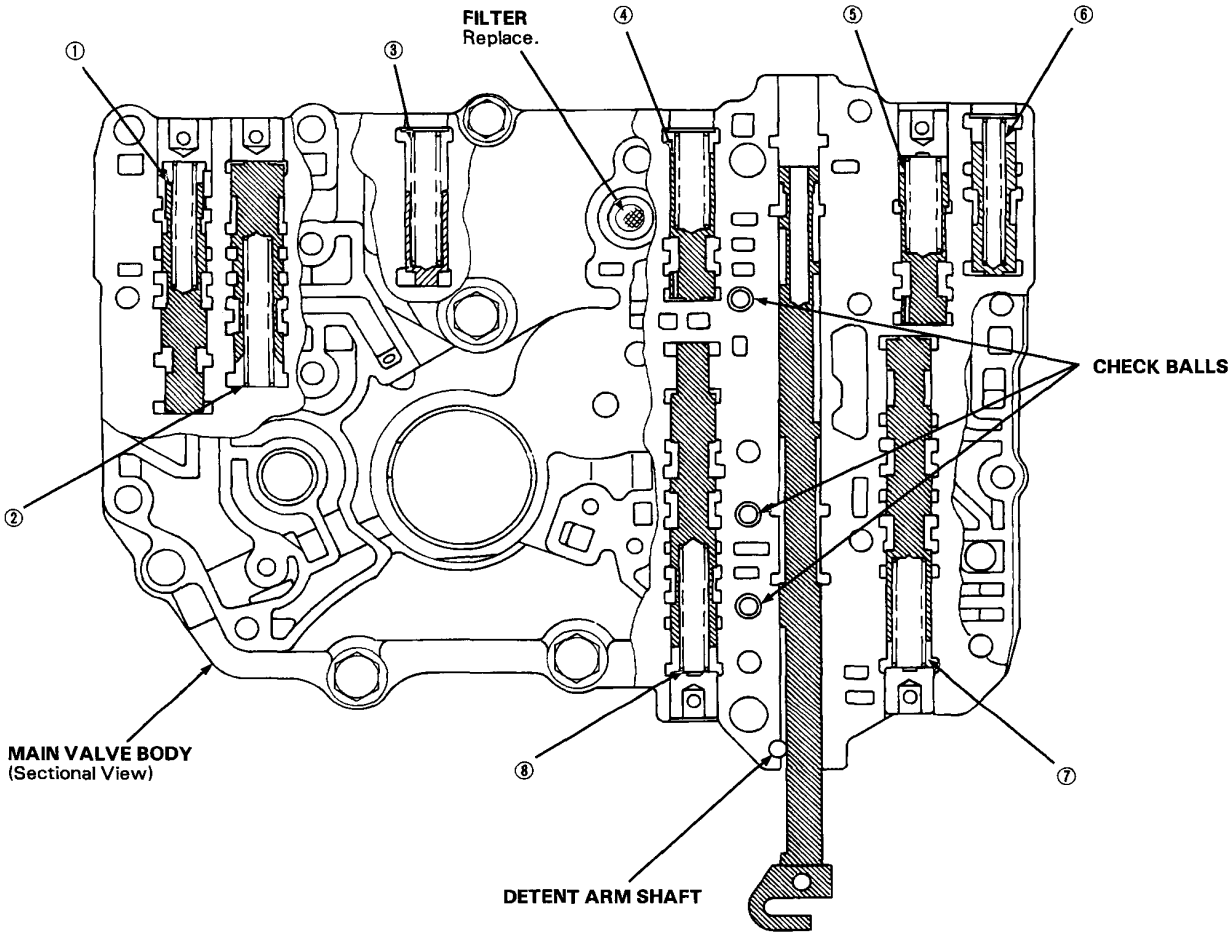

SPRING SPECIFICATIONS

Unit: mm (in)

No.	Spring	Standard (New)			
		Wire Dia.	O.D.	Free Length	No. of Coils
①	Lock-up control valve spring	0.70 (0.028)	6.60 (0.260)	38.00 (1.496)	14.1
②	Lock-up shift valve spring	0.90 (0.035)	7.60 (0.299)	73.70 (2.902)	32.0
③	Cooler relief valve spring	1.10 (0.043)	8.40 (0.331)	46.80 (1.843)	17.0
④	Modulator valve spring	1.40 (0.055)	9.40 (0.370)	33.00 (1.299)	10.5
⑤	CPC valve spring	1.40 (0.055)	9.40 (0.370)	33.00 (1.299)	10.5
⑥	3—2 kick-down valve spring	1.20 (0.047)	7.10 (0.280)	46.90 (1.846)	20.6
⑦	1—2 shift valve spring	1.00 (0.039)	8.60 (0.339)	41.30 (1.626)	16.9
⑧	2—3 shift valve spring	0.90 (0.035)	7.60 (0.299)	57.00 (2.244)	26.8

Secondary Shaft

Disassembly/Inspection/Reassembly

NOTE:
- Lubricate all parts with ATF during reassembly.
- Install the thrust needle bearings with unrolled edge of bearing retainer facing washer.
- Inspect thrust needle and needle bearings for galling and rough movement.
- Before installing the O-rings, wrap the shaft splines with tape to prevent damage to the O-rings.

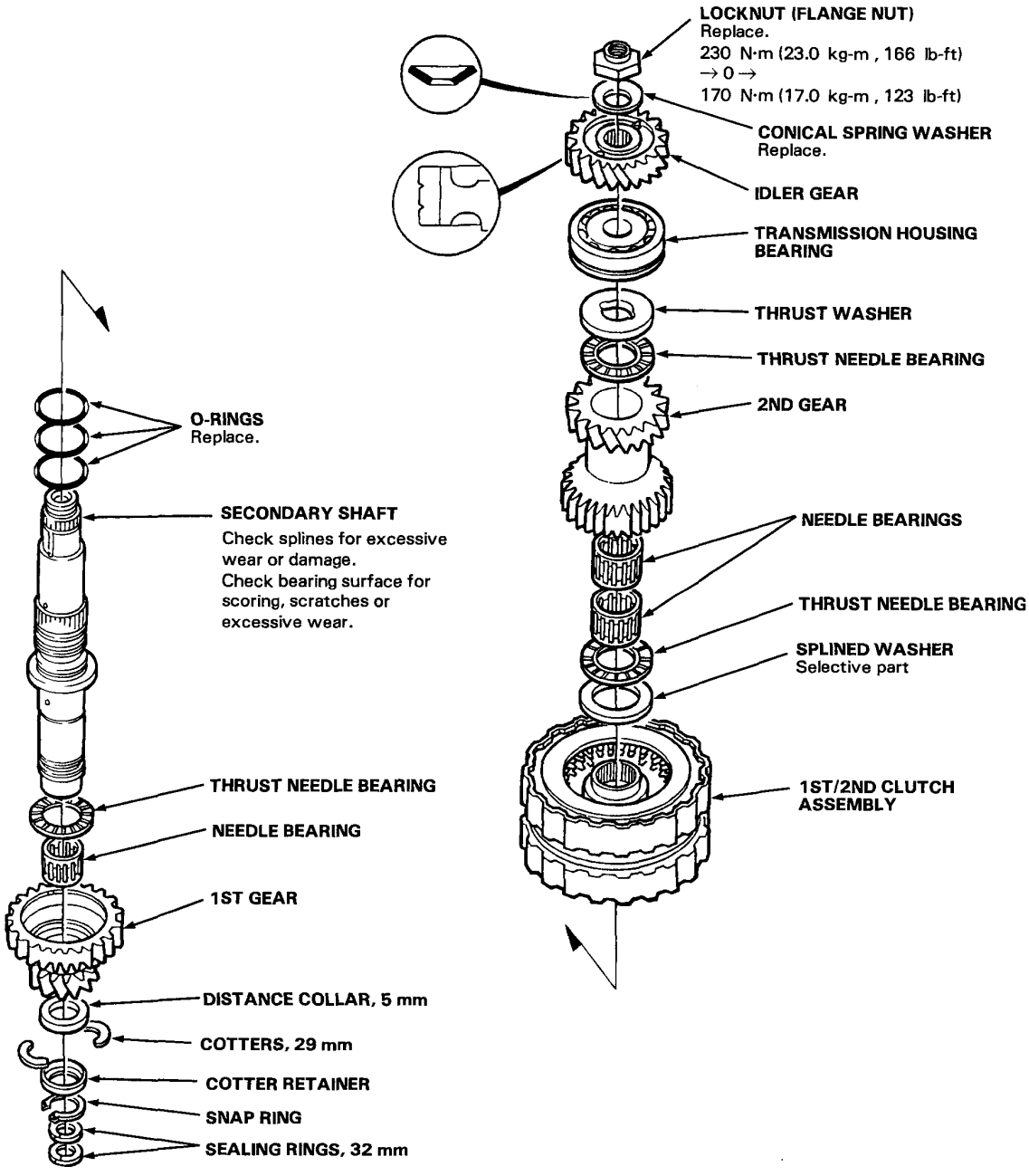

Inspection

- Clearance Measurement

NOTE: Lubricate all parts with ATF during assembly.

1. Remove the secondary shaft bearing from the transmission housing.
2. Assemble the secondary shaft assembly without O-rings.
3. Install the secondary shaft bearing on the secondary shaft.

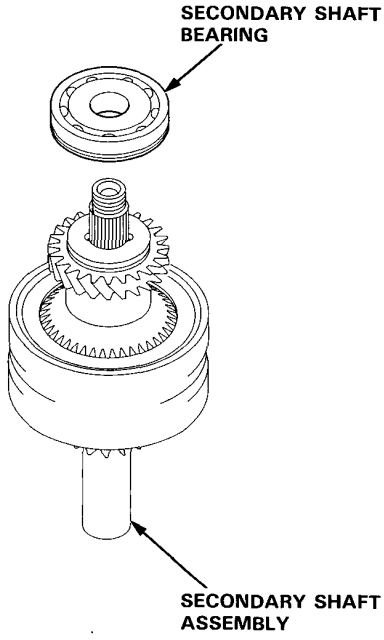

4. Set the dial indicator to the 2nd gear as shown.

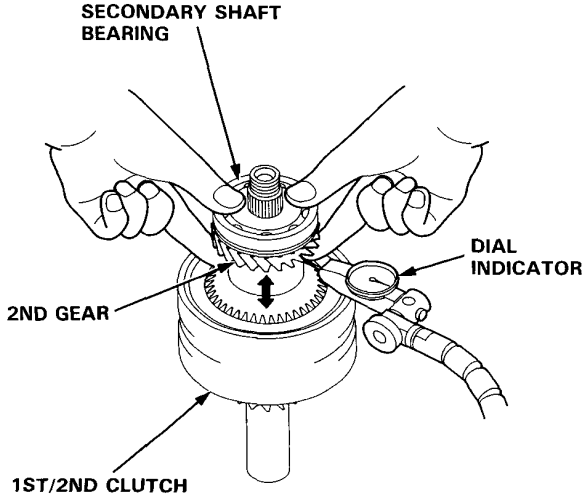

5. Hold the secondary shaft bearing against the 1st/2nd clutch assembly. Measure the 2nd gear axial clearance while moving the 2nd gear.

   STANDARD: 0.07–0.15 mm (0.003–0.006 in)

   NOTE: Take measurements in at least three places, and use the average as the actual clearance.

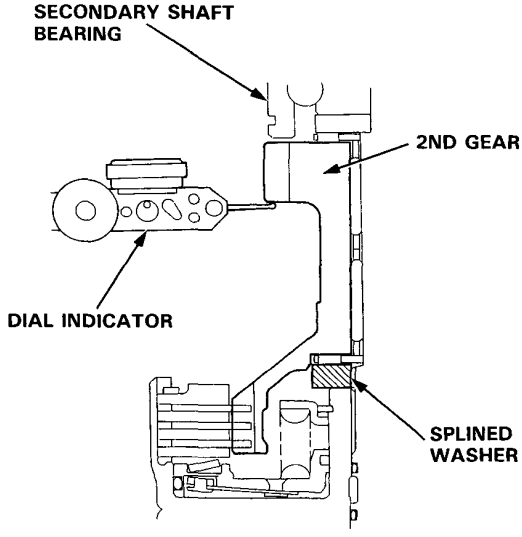

6. If the clearance is out of tolerance, remove the splined washer and measure its thickness.
7. Select and install a new splined washer then recheck.

SPLINED WASHER

No.	Part Number	Thickness
1	90406–PX4–700	4.05 mm (0.159 in)
2	90407–PX4–700	4.10 mm (0.161 in)
3	90408–PX4–700	4.15 mm (0.163 in)
4	90409–PX4–700	4.20 mm (0.165 in)
5	90410–PX4–700	4.25 mm (0.167 in)
6	90411–PX4–700	4.30 mm (0.169 in)
7	90412–PX4–700	4.35 mm (0.171 in)
8	90413–PX4–700	4.40 mm (0.173 in)
9	90414–PX4–700	4.45 mm (0.175 in)

8. After replacing the splined washer, make sure that the clearance is within tolerance.

Illustrated Index

1ST/2ND CLUTCH ASSEMBLY: H23A1/H23A2 Engine

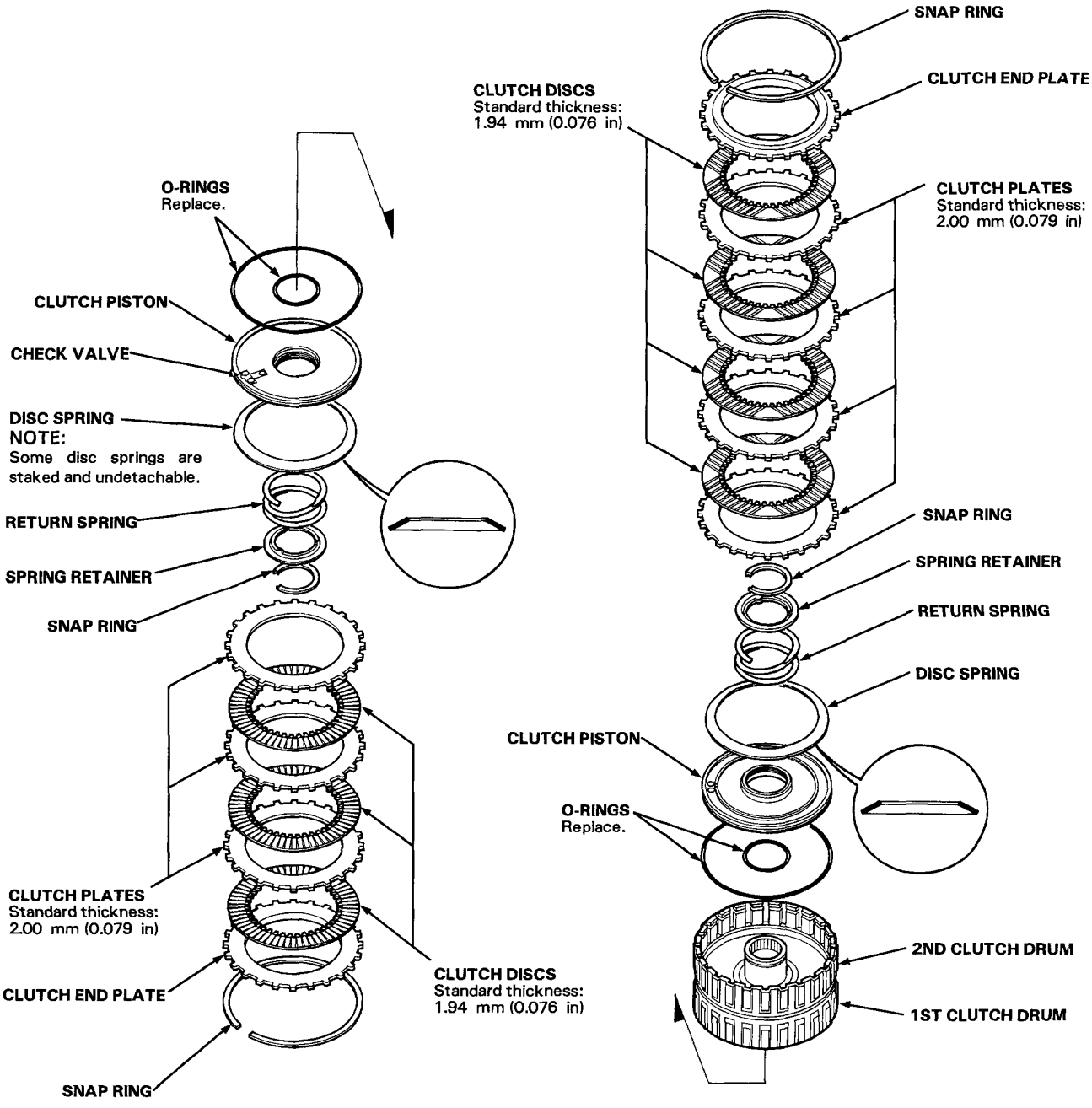

1ST/2ND CLUTCH ASSEMBLY: F20A4/F22A1/F22A2 Engine

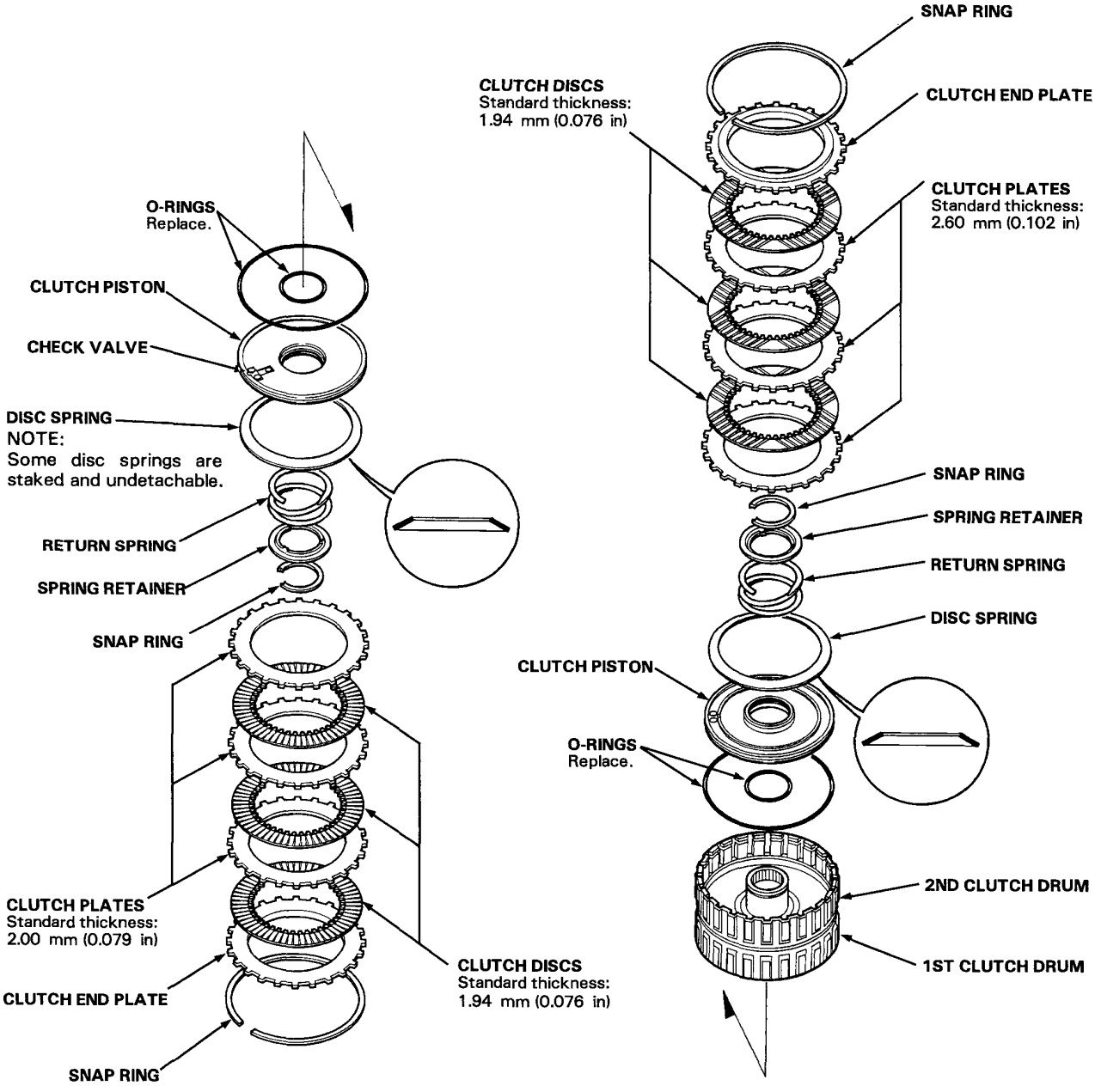

(cont'd)

Illustrated Index (cont'd)

3RD/4TH CLUTCH ASSEMBLY

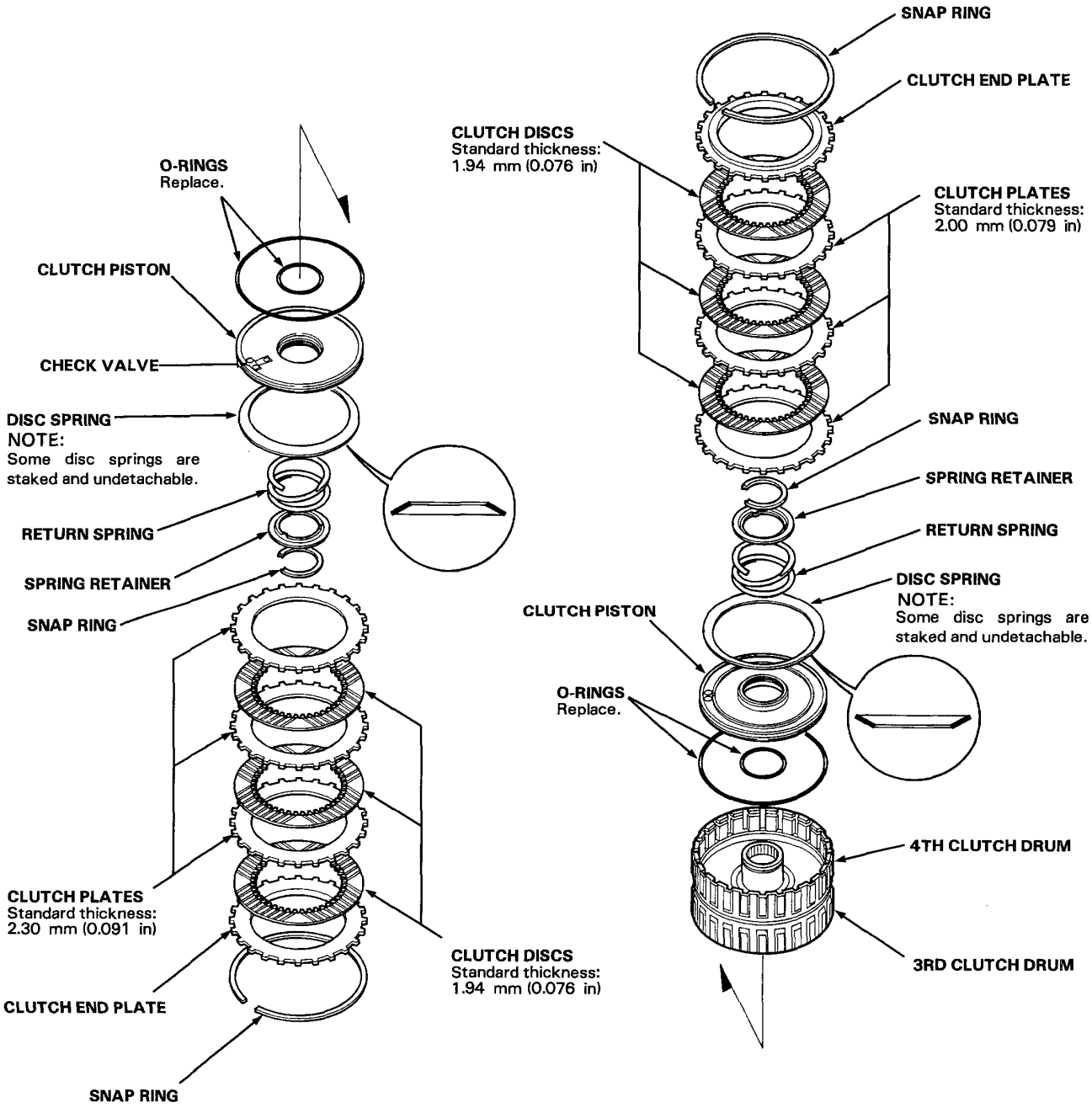

1ST-HOLD CLUTCH ASSEMBLY

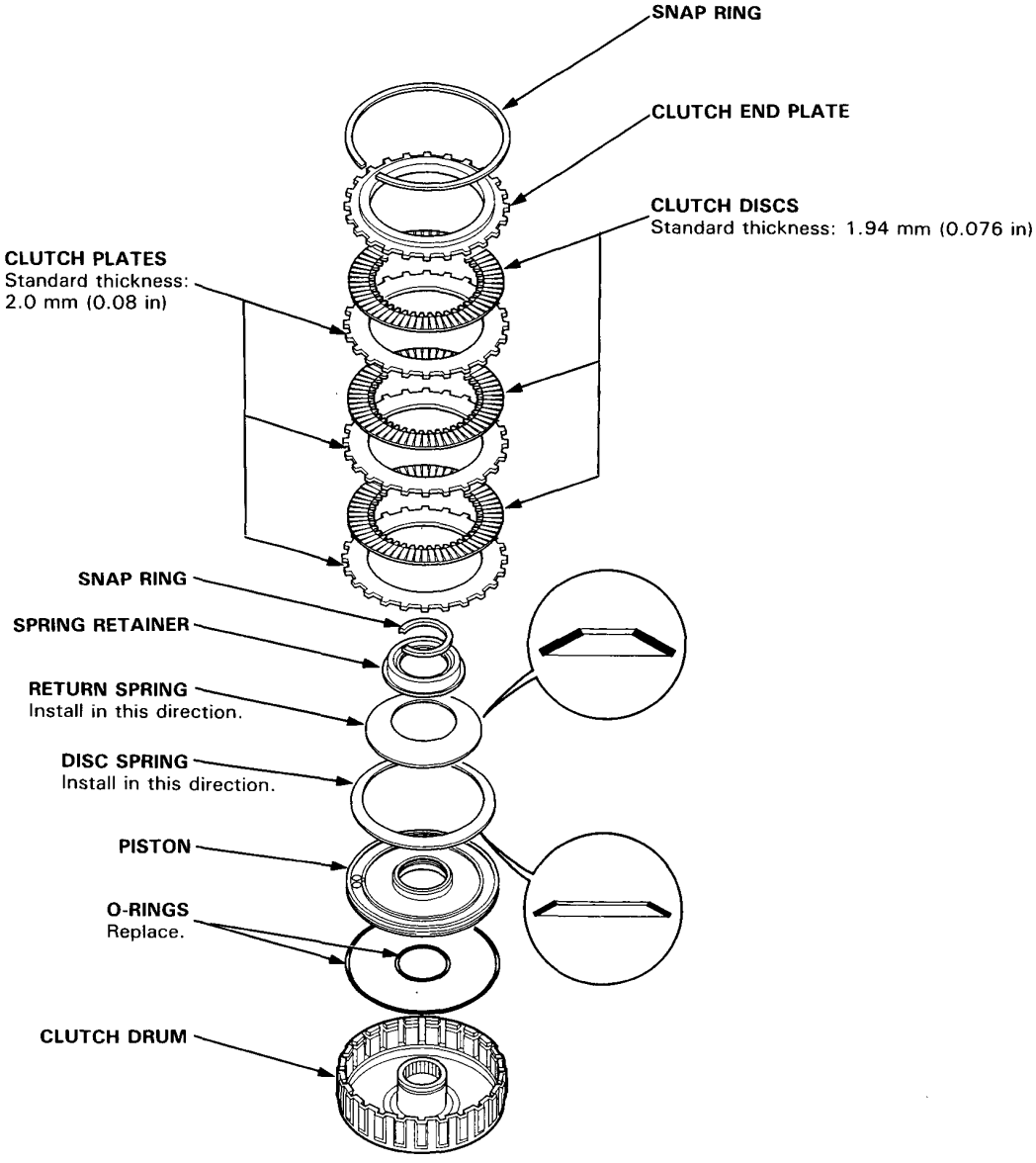

Reassembly

NOTE:
- Coat all parts with ATF.
- Replace the parts below:
  - O-rings
  - Lock washers
  - Gaskets
  - Locknuts and conical spring washers
  - Sealing washer
- Torque the 6 x 1.0 mm Bolts:
  12 N·m (1.2 kg-m , 9 lb-ft)

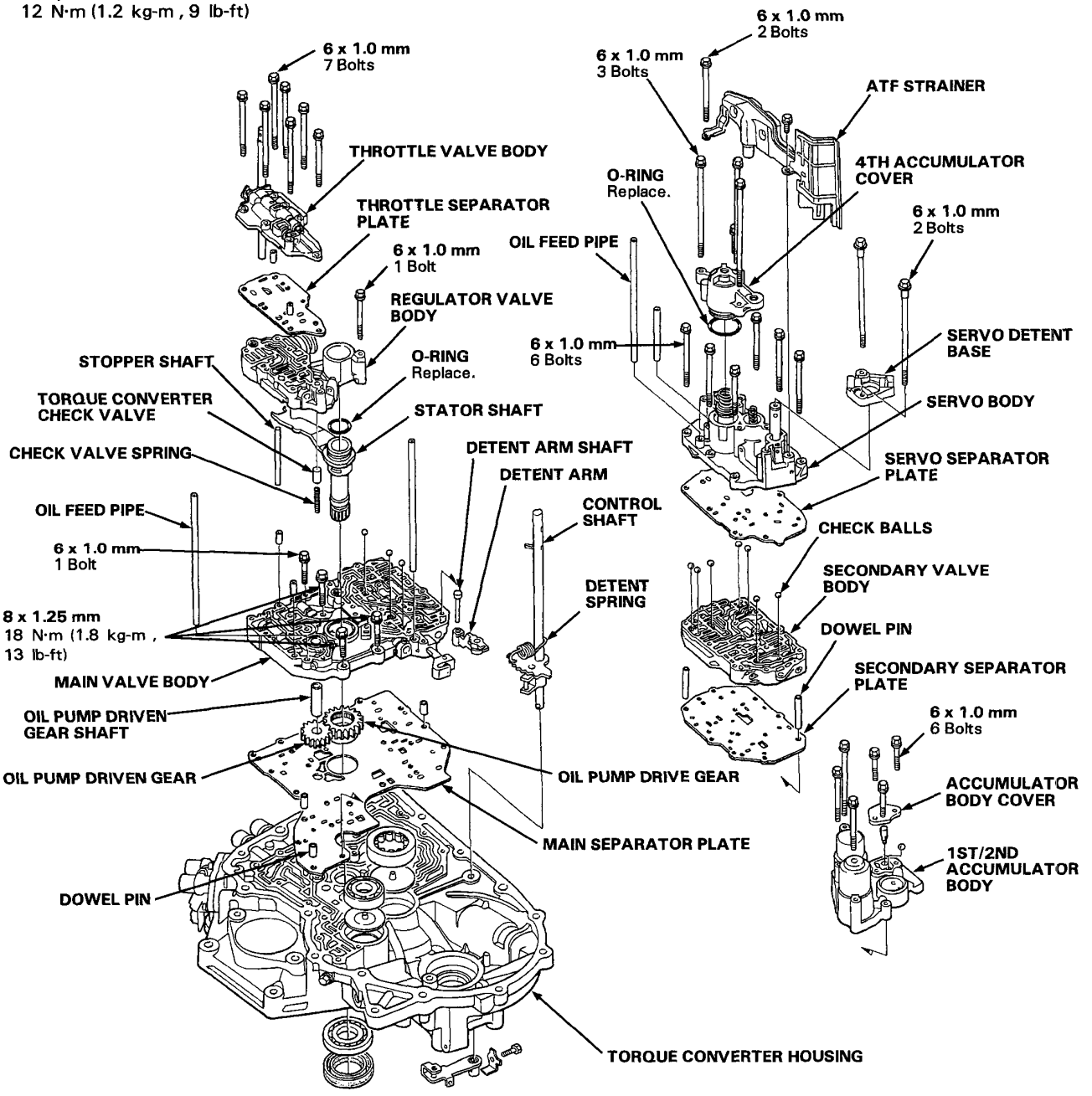

1. Install the main separator plate and the three dowel pins on the torque converter housing. Then install the oil pump gears and oil pump driven gear shaft.

   NOTE: Install the oil pump driven gear with its grooved and chamfered side facing down.

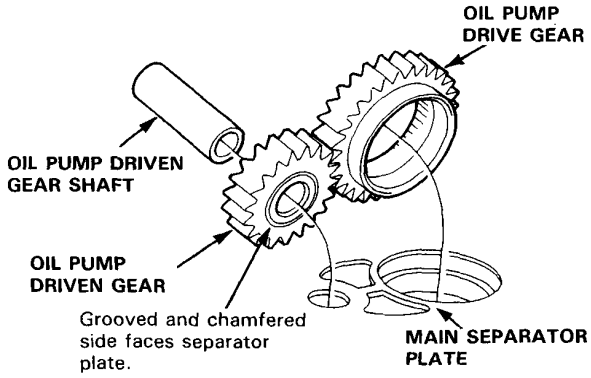

2. Install the main valve body with four bolts. Make sure the oil pump drive gear rotates smoothly in the normal operating direction, and the oil pump driven gear shaft moves smoothly in the axial and normal operating directions.

3. If the oil pump drive gear and oil pump driven gear shaft do not move freely, loosen the main valve body bolts, realign the oil pump driven gear shaft, and then retighten to the specified torque.

   CAUTION: Failure to align the oil pump driven gear shaft correctly will result in a seized oil pump drive gear or oil pump driven gear shaft.

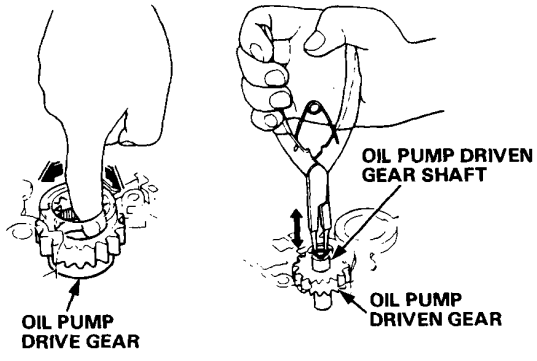

4. Install the stator shaft and stopper shaft.

5. Install the two dowel pins, torque converter check valve and torque converter check valve spring in the main valve body.

6. Install the regulator valve body with the bolt on the main valve body.

7. Install the two dowel pins and separator plate on the regulator valve body, then install the throttle valve body (seven bolts).

8. Install the secondary separator plate with two dowel pins on the main valve body.

9. Install the control shaft in the housing with the control shaft and manual valve together.

10. Install the detent arm and arm shaft in the main valve body, then hook the detent spring to the detent arm.

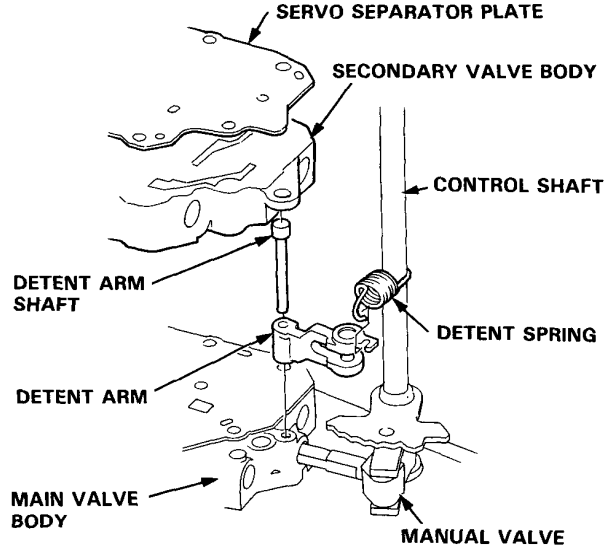

11. Install the secondary valve body, servo separator plate and servo body (six bolts).

12. Install the oil feed pipe in the servo body, then install the 4th accumulator cover (three bolts).

13. Install the ATF strainer (two bolts).

14. Install the servo detent base (two bolts).

15. Install the 1st/2nd accumulator body (six bolts).

16. Install two oil feed pipes in the main valve body and the oil feed pipe in the servo body.

(cont'd)

Reassembly (cont'd)

17. Install the differential assembly, countershaft sub-assembly, mainshaft sub-assembly, and secondary shaft sub-assembly in the torque converter housing.

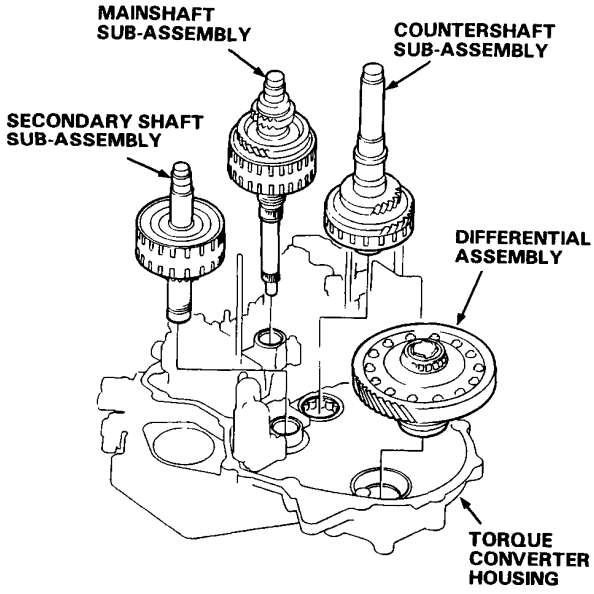

18. Install the splined washer, thrust needle bearing and needle bearings on the secondary shaft.

19. Install the needle bearings, countershaft 4th gear, reverse selector hub, and reverse selector with the shift fork on the countershaft.

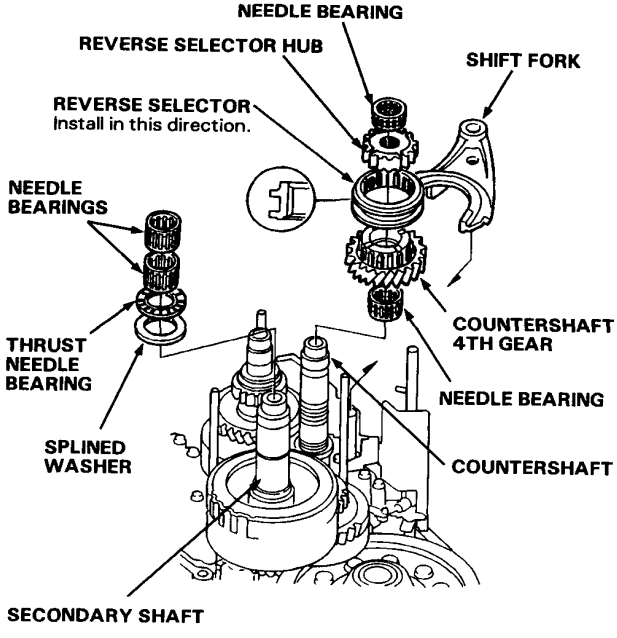

20. Turn the shift fork shaft so the large chamfered hole is facing the fork bolt hole. Then install the shift fork and the lock bolt with a new lock washer, and torque. Bend the lock tab against the bolt head.

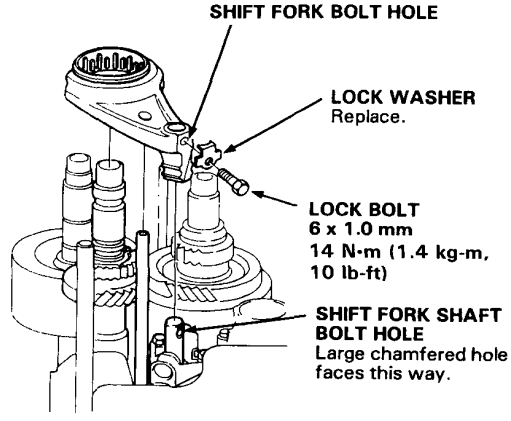

21. Install the secondary shaft 2nd gear, thrust needle bearing and thrust washer on the secondary shaft. Install the countershaft reverse gear and 2nd gear on the countershaft as shown.

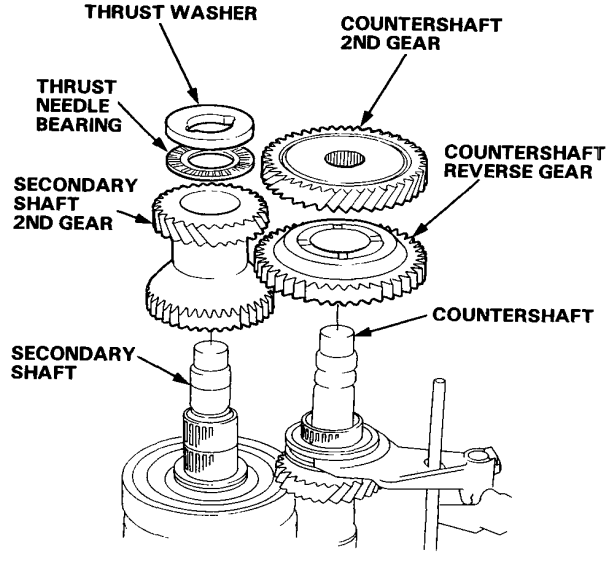

22. Slip the reverse idler gear into the transmission housing as shown.

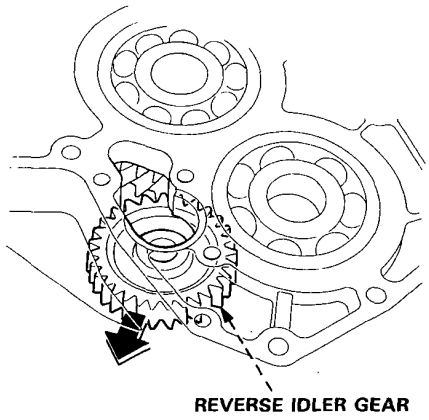

23. Align the spring pin of the control shaft with the transmission housing groove by turning the control shaft.

24. Install three dowel pins and a new gasket on the torque converter housing.

25. Place the transmission housing on the torque converter housing.

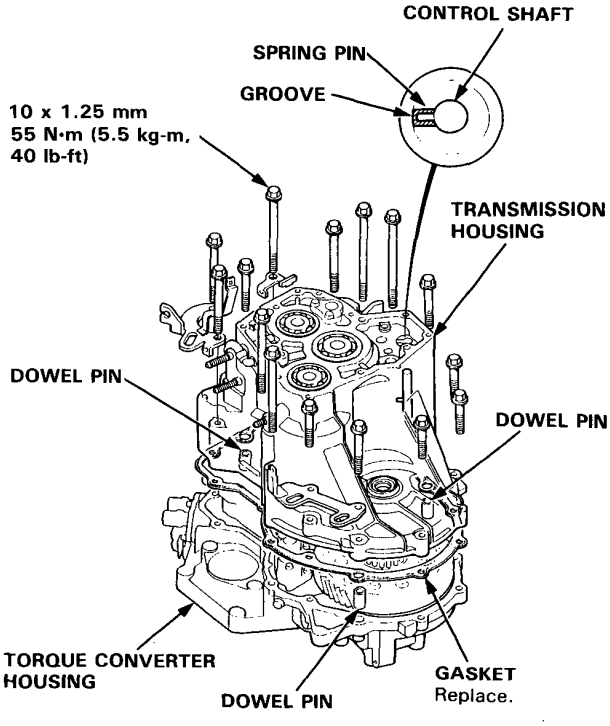

26. Install the transmission housing bolts along with the transmission hanger, harness clamp stay, throttle control cable stay/transmission hanger and harness stay. Torque the bolts in two or more steps in the sequence shown.

TORQUE: 55 N·m (5.5 kg-m, 40 lb-ft)

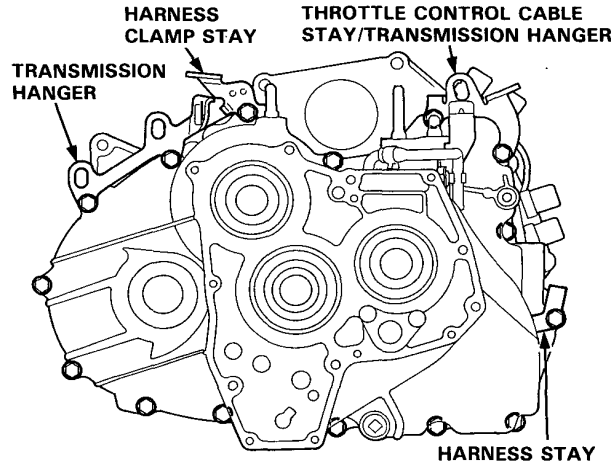

27. Coat the reverse idler gear shaft, needle bearing and new O-rings with lithium grease lightly.
Assemble new O-rings and needle bearing on the reverse idler gear shaft, then install the reverse idler gear shaft in the reverse idler gear shaft holder, aligning the D-shaped cut out of the shaft with the D-shaped area of the holder.

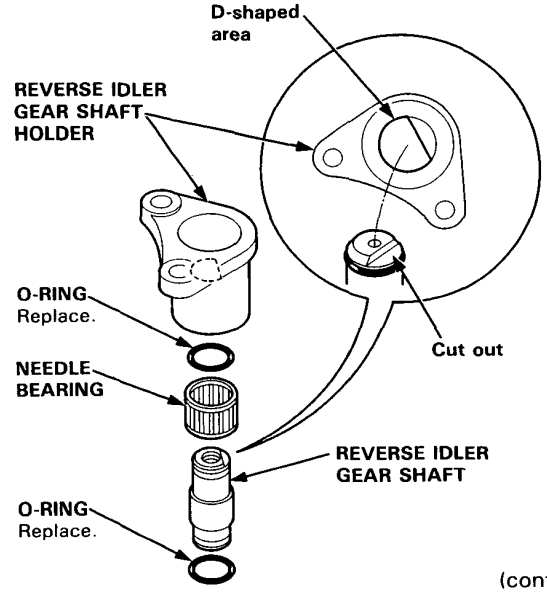

(cont'd)

Reassembly (cont'd)

28. Engage the reverse idler gear to the countershaft and mainshaft reverse gears, then install the reverse idler gear shaft/holder assembly on the transmission housing.

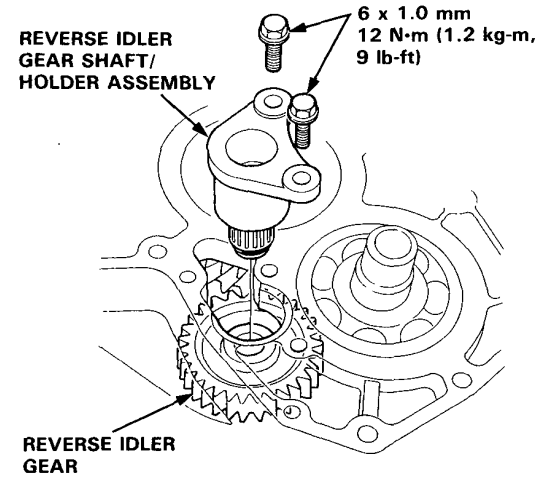

29. Install the parking brake lever on the control shaft, then install the lock bolt loosely with a new lock washer.

NOTE: Do not tighten the lock bolt to the specified torque and bend the lock tab in this step.

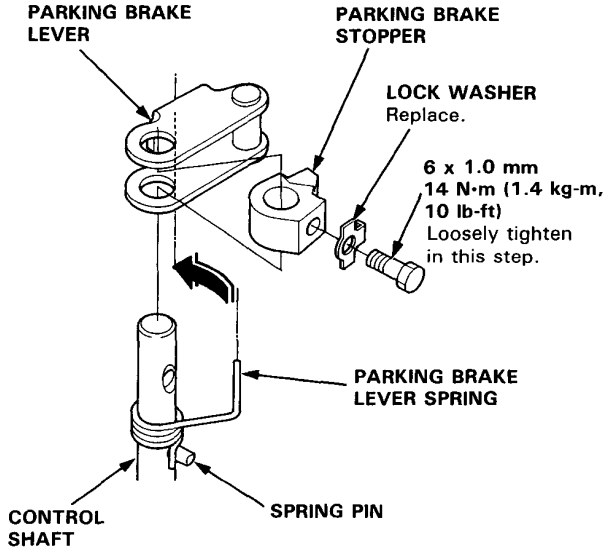

30. Slip the special tool onto the mainshaft.

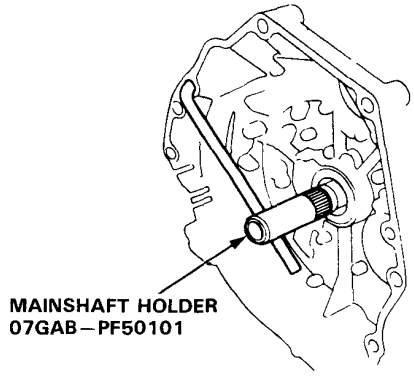

31. Lubricate the following parts with ATF:
    - Splines and threads of each shaft.
    - Threads of the old locknuts.
    - Splines of the mainshaft and countershaft idler gears.
    - Splines of the parking gear.

32. Install the mainshaft idler gear.

33. Install the old locknut on the mainshaft to seat the idler gear.

NOTE:
- The mainshaft locknut has left-hand threads.
- Do not drive the idler gear on with a hammer.
- Do not use a impact wrench, always use a torque wrench to tighten the locknut.

TORQUE: 230 N·m (23.0 kg-m, 166 lb-ft)

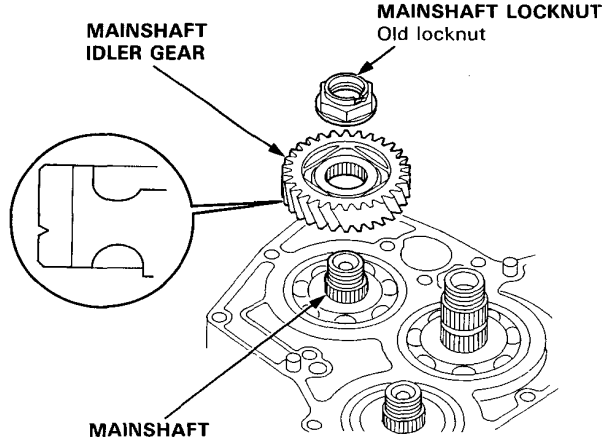

34. Install the secondary shaft idler gear on the secondary shaft.

35. Install the thrust washer, thrust needle bearing, needle bearing, countershaft idler gear and parking gear on the countershaft.

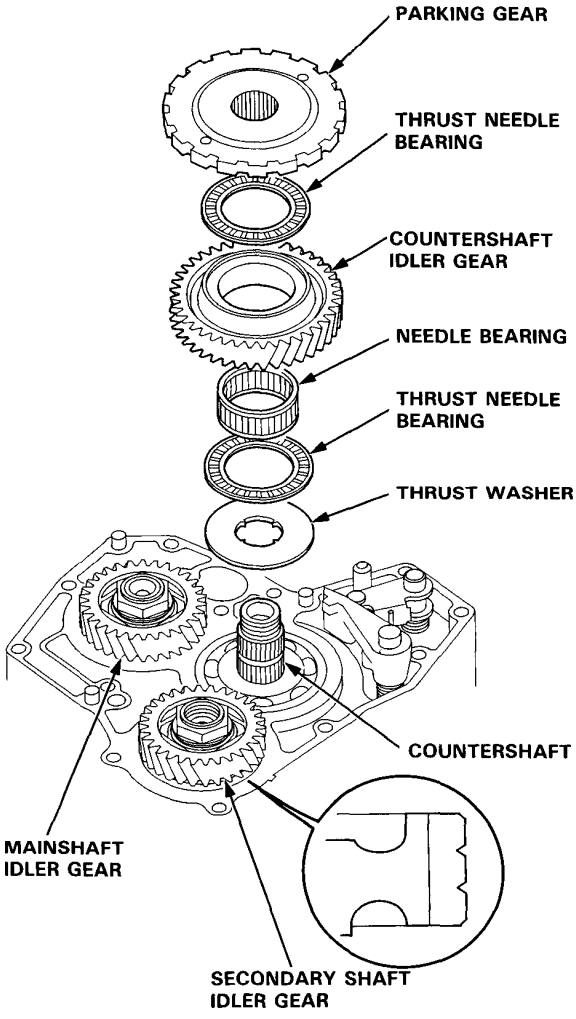

36. Install the old locknut on the secondary shaft. Tighten the old locknut to seat the secondary shaft idler gear while holding the countershaft idler gear.

NOTE:
- Do not drive the idler gear on with a hammer.
- Do not use a impact wrench, always use a torque wrench to tighten the locknut.

TORQUE: 230 N·m (23.0 kg-m, 166 lb-ft)

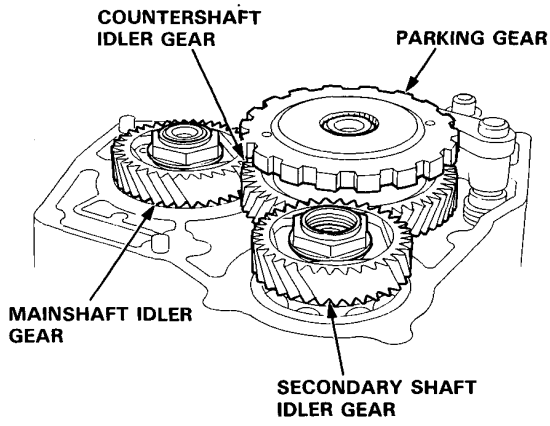

37. Install the parking brake pawl shaft and spring in the transmission housing, then install the parking brake pawl.

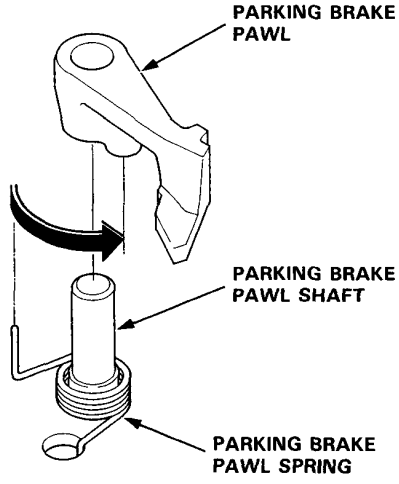

(cont'd)

Reassembly (cont'd)

38. Install the special tool on the parking gear, and engage the parking brake pawl with the parking gear by moving up the parking brake pawl.

    CAUTION: Keep all of the particles of the transmission when installing the special tool.

39. Tighten the special tool and lightly seat the parking gear.

    NOTE: Do not drive the parking gear on with a hammer.

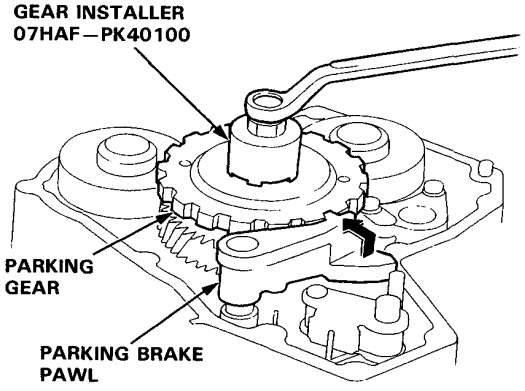

40. Remove the special tool.
41. Use the old locknut to tighten the press fit parking gear to the specified torque, then loosen it.

    NOTE: Do not use a impact wrench, always use a torque wrench to tighten the locknut.

    TORQUE: 230 N·m (23.0 kg-m, 166 lb-ft)

42. Remove the old locknut, then install new conical spring washers and new locknuts on each shaft.

    CAUTION: Install the conical spring washers in the direction shown.

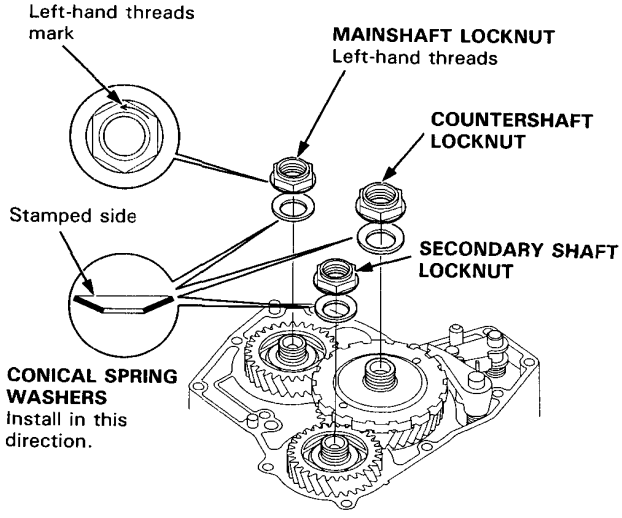

43. Tighten the locknuts to specified torque using a torque wrench.

    NOTE: Do not use a impact wrench, always use a torque wrench to tighten the locknuts.

    TORQUE: 170 N·m (17.0 kg-m, 123 lb-ft)

    NOTE: The mainshaft locknut has left-hand threads.

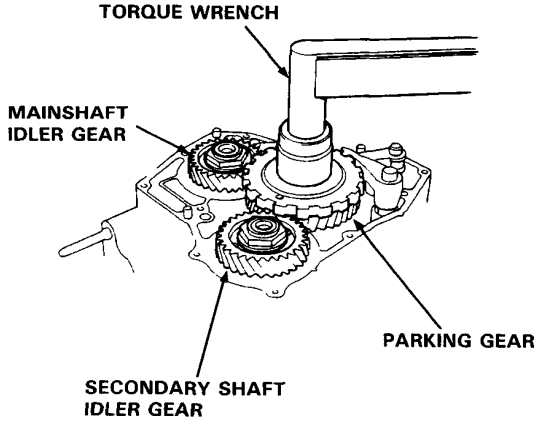

44. Stake each locknut into its shaft using a 3.5 mm punch.

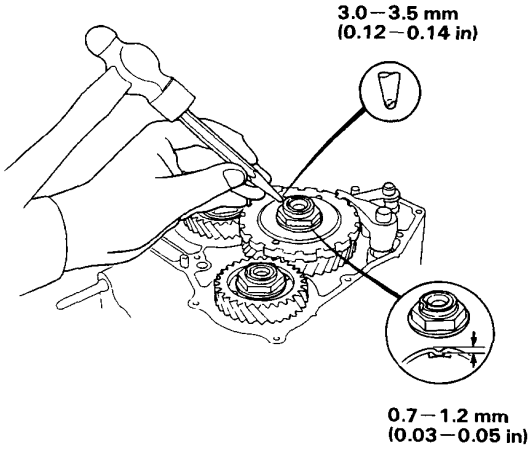

45. Set the parking brake lever in the [P] position, then verify that the parking brake pawl engages the parking gear.

46. If the pawl does not engage fully, check the parking brake pawl stopper clearance.

47. Tighten the bolt, and bend the lock tab against the bolt head.

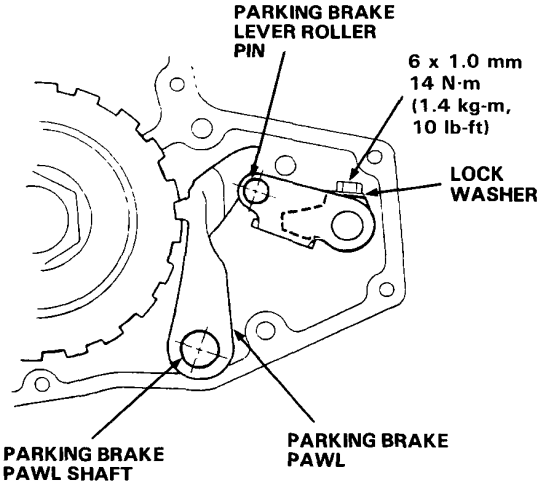

48. Install the right side cover.

TORQUE: 12 N·m (1.2 kg-m, 9 lb-ft)

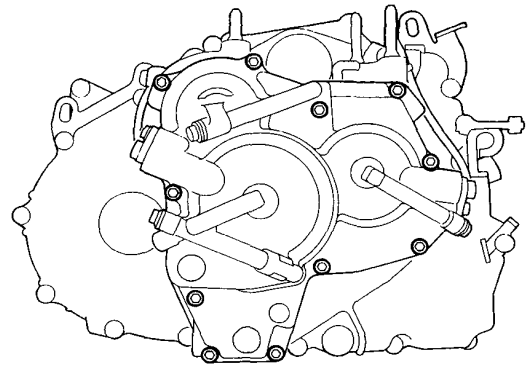

49. Install the throttle control lever and spring on the throttle control shaft.

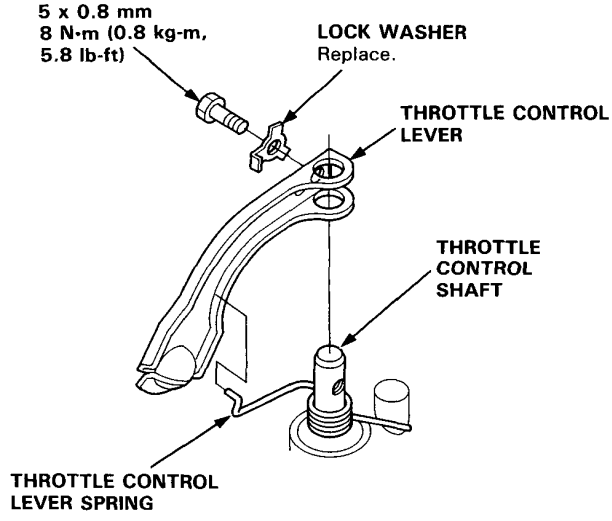

50. Install the ATF cooler pipes with new sealing washers.

TORQUE: 29 N·m (2.9 kg-m, 21 lb-ft)

51. Install the ATF level gauge.

Throttle Control Cable

Inspection

NOTE:
Before inspecting the throttle control cable, make sure that:

- Throttle cable free play is correct.
- Idle speed is correct.
- You warm up the engine to normal operating temperature (the radiator fan comes on).

1. Verify that the throttle control cable is clamped correctly in three positions.

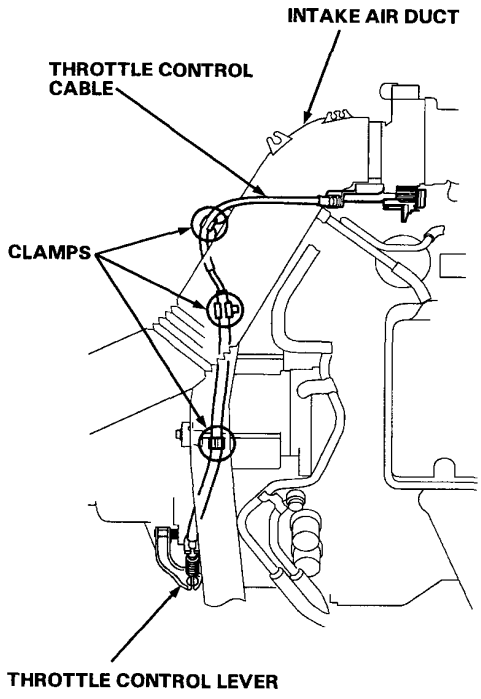

2. Verify that the throttle control lever is synchronized with the throttle linkage while depressing and releasing the accelerator pedal.

3. If the throttle control lever is not synchronized with the throttle linkage, adjust the throttle control cable.

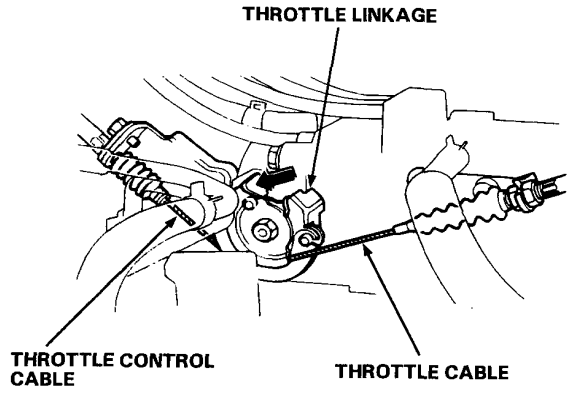

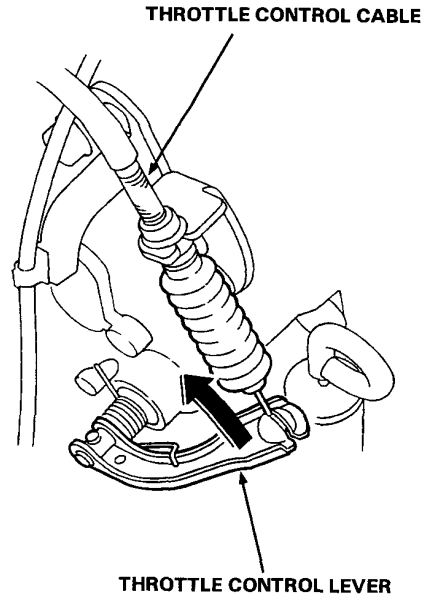

4. Check that there is play in the throttle control lever while depressing the accelerator pedal to the full-throttle position.

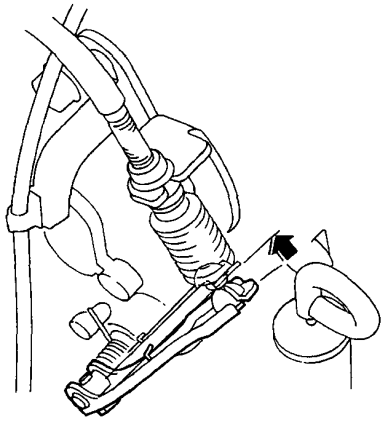

5. Remove the cable end of the throttle control cable from the throttle control lever.

6. Check that the throttle control lever moves smoothly.

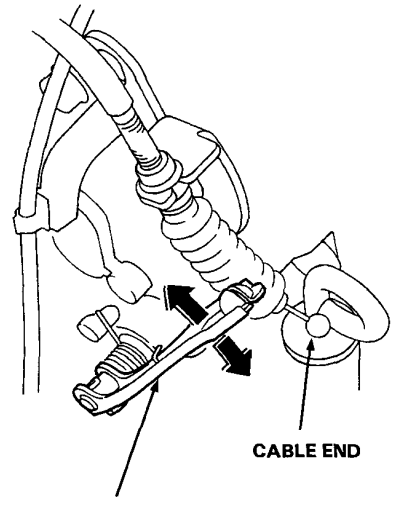

Throttle Control Cable

Adjustment

NOTE:
Before adjusting the throttle control cable, make sure that:

- Throttle cable free play is correct.
- Idle speed is correct.
- You warm up the engine to normal operating temperature (the radiator fan comes on).

1. Verify that the throttle control cable is clamped correctly in three positions.

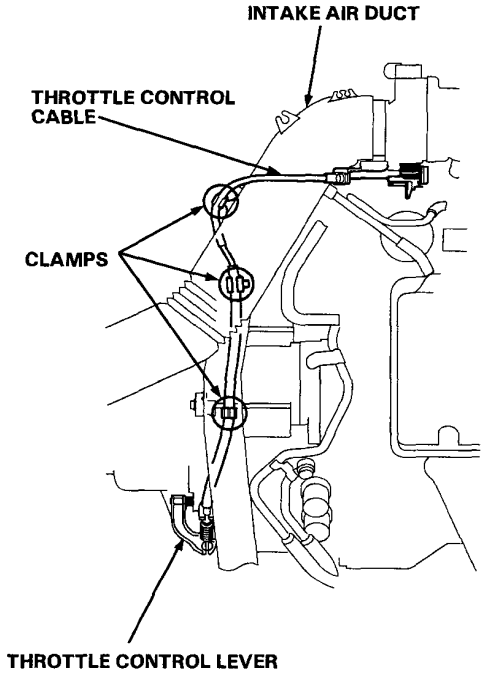

2. Verify that the throttle linkage is in the fully-closed position.

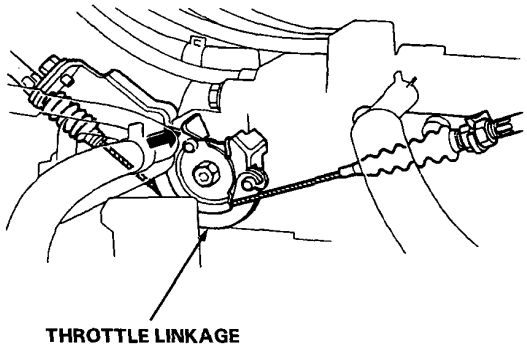

3. Loosen the locknut on the throttle control cable at the throttle control lever.

4. Remove the free play in the throttle control cable with the locknut, while pushing the throttle control lever to the fully-closed position as shown.

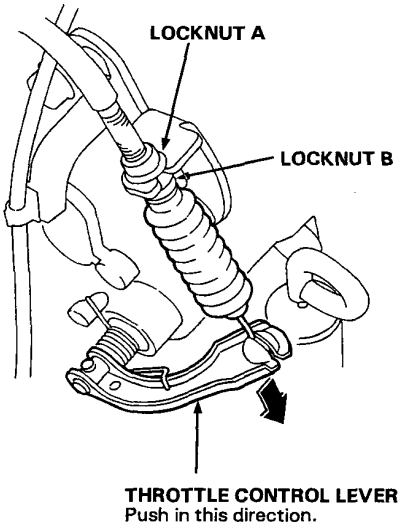

5. Tighten the locknuts.

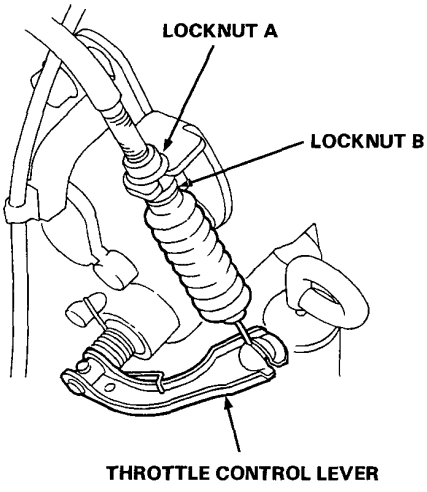

6. After tightening the locknuts, inspect the synchronization and throttle control lever movement.

NOTE:
To tailor the shift/lock-up characteristics to a particular customer's driving expectations, you can adjust the throttle control cable up to 2 mm (0.078 in) shorter than the "synchronized" point.

Steering (4WS)

Troubleshooting (4WS)

Problem Codes 17-2
Precautions 17-3
Symptom-to-System Chart 17-4

Outline of Model Changes

There are some changes between the problem code indication patterns and problem codes.
The changes are as follows:

- Blinking interval of problem code indication patterns has changed.
- No. 70 (IG1) of problem code has been deleated.

Be aware of these two changes and refer to related shop manuals when troubleshooting is carried out.

Troubleshooting (4WS)

Problem Codes

To display a problem code:

(1) Turn the ignition switch OFF.

(2) Pull out the service check connector (2P blue) located behind the center console and connect the two terminals of the connector with a jumper wire.

NOTE:
LHD is shown: RHD is similar.

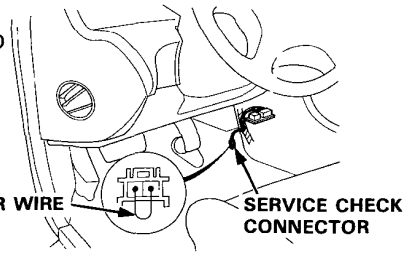

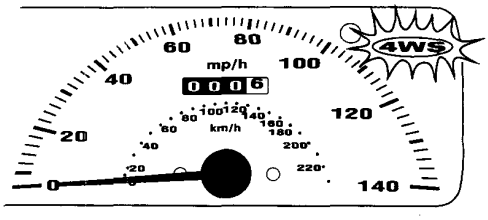

(3) Turn the ignition switch ON. (Do not start the engine)

(4) Watch as the 4WS indicator light blinks to display the problem code.

(5) Record the problem code.

NOTE:

- Be sure to record the problem code. If you do any of the following, the problem code will be erased.
  - Disconnect the battery terminals.
  - Remove No. 43 CLOCK RADIO (10 A) fuse from the under-hood fuse/relay box.
  - Disconnect the 4WS control unit connector.
- If the engine is started with the service connector jumped, the PGM-FI indicator light will stay on.

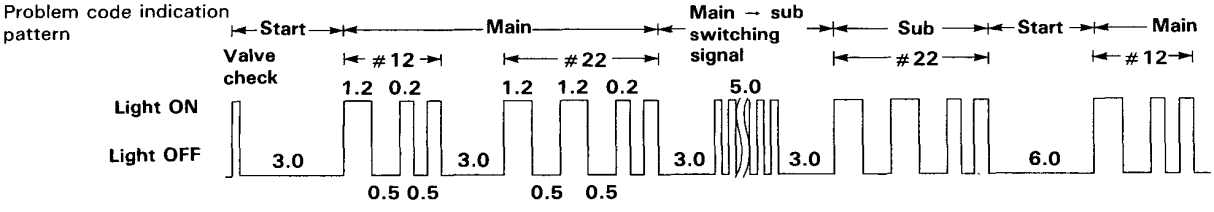

The 4WS indicator light displays a problem code by a series of long and short blinks. This indicator light can display multiple component problems by blinking separate codes, one after another. The number of long blinks equals the first digit of the code, the number of short blinks equals the second digit. When there are multiple codes, there is a two second pause between the codes.

System problems can be detected by both the main and sub central processing units (CPUs) in the 4WS control unit. Each CPU can memorize up to 10 problem codes. If both CPUs have stored problem codes, the 4WS indicator light will:

- Blink quickly once as an indicator lignt check, (this happens only when the ignition switch is first turned on).
- Pause for three seconds.
- Display the problem codes stored in the main CPU.
- Pause for three seconds.
- Blink rapidly for five seconds to indicate the switch between the main and sub CPU.
- Pause for three seconds.
- Display the problem codes stored in the sub CPU.
- Pause for six seconds, then repeat the cycle.

This cycle will continue until the ignition is turned OFF.

NOTE: If the main and sub CPUs display the same problem codes, those codes need only be checked once.

Precautions

PROBLEM CODES

The problem code is memorized when the 4WS control unit detects an abnormality, even if it was a temporary condition. To troubleshoot, ask the customer in detail about the conditions when the 4WS indicator light came on, and try to duplicate those conditions during the test drive. If the 4WS indicator light does not come on during the test drive, do not continue to troubleshoot; the system is OK at this time. The troubleshooting procedures assume that the symptom is occurring. Check for loose connections or poor contacts at the connectors by wiggling the harness, etc.

4WS INDICATOR

The 4WS indicator light comes on when the 4WS control unit detects a problem in the system. Depending on the problem, the 4WS indicator light may be canceled by turning the ignition switch off, or it might require removing the clock/radio fuse. If a problem is detected in the main steering angle sensor system, you must remove the clock/radio fuse to cancel the 4WS indicator light. If a problem is detected in any other part of the system, turning the ignition switch off will cancel the 4WS indicator light.

NOTE: If the 4WS indicator light comes on because of a temporary problem in the main steering angle sensor system, it cannot be canceled by simply removing the cause of the problem and cycling the ignition switch; the clock/radio fuse must be removed.

The 4WS indicator light does not come on when the problem code is 71, 72, or 73. However, the 4WS indicator light will flash these codes when the service check connector is jumped.

TEMPORARY DRIVING CONDITIONS:

When the vehicle is operated under extremely harsh or abnormal conditions, the 4WS control unit interprets it as a problem and memorizes the problem code.

Problem code	Operation	4WS Indicator Light
71	The car is driven aggressively with the driver and three passengers on board, or the steering wheel is turned with a rear wheel blocked by the curb, etc.	——
73	The engine is started while quick-charging the battery.	——
74	Driving the car with the parking brake ON.	ON 5 minutes after detection

Fail-safe control:
When the fail-safe conditions are met, the 4WS control unit stops the 4WS control and returns the rear wheels to the straight driving position slowly.

Troubleshooting (4WS)

Symptom-to-System Chart

PROBLEM CODE	FAIL-SAFE (F/S) ITEM			AFFECTED														ACTION	REFERENCE PAGE
	SYSTEM	POINT	4WS CONTROL UNIT TERMINAL NUMBER	FRONT SUB STEERING ANGLE SENSOR	REAR SUB STEERING ANGLE SENSOR	FRONT MAIN STEERING ANGLE SENSOR	REAR MAIN STEERING ANGLE SENSOR	FRONT WHEEL SPEED SENSOR	*REAR LEFT WHEEL SPEED SENSOR	*REAR RIGHT WHEEL SPEED SENSOR	ABS CONTROL UNIT	4WS CONTROL UNIT	REAR ACTUATOR MOTOR	POWER SYSTEM HARNESS	ALTERNATOR	PARKING BRAKE	HARNESS CONNECTOR		
No code	—	—	7 + 23									○					○	Go to trouble-shooting	—
No code	—	—	18 25 4 2 16 + 24									○			○		○	Go to trouble-shooting	—
10	SUB STEERING ANGLE SENSOR	FRONT	22 26	○								○					○	Go to trouble-shooting	—
11		REAR	29 17		○							○					○	Go to trouble-shooting	—
12		FRONT	26 21	○								○					○	Go to trouble-shooting	—
13		REAR	17 28		○							○					○	Go to trouble-shooting	—
14		FRONT	—									○						Replace 4WS control unit	—
15		REAR	—									○						Replace 4WS control unit	—
16		FRONT	22 26 21	○								○					○	Go to trouble-shooting	—
17		REAR	29 17 28		○							○					○	Go to trouble-shooting	—
18		—	—									○						Replace 4WS control unit	—

PROBLEM CODE	FAIL-SAFE (F/S) ITEM			AFFECTED														ACTION	REFERENCE PAGE
	SYSTEM	POINT	4WS CONTROL UNIT TERMINAL NUMBER	FRONT SUB STEERING ANGLE SENSOR	REAR SUB STEERING ANGLE SENSOR	FRONT MAIN STEERING ANGLE SENSOR	REAR MAIN STEERING ANGLE SENSOR	FRONT WHEEL SPEED SENSOR	*REAR LEFT WHEEL SPEED SENSOR	*REAR RIGHT WHEEL SPEED SENSOR	ABS CONTROL UNIT	4WS CONTROL UNIT	REAR ACTUATOR MOTOR	POWER SYSTEM HARNESS	ALTERNATOR	PARKING BRAKE	HARNESS CONNECTOR		
20	MAIN STEERING ANGLE SENSOR	FRONT	8 15	○		○						○					○	Go to trouble-shooting	—
21		REAR	6 13		○		○					○					○	Go to trouble-shooting	—
22		FRONT	8 15	○		○						○					○	Go to trouble-shooting	—
23		REAR	6 13		○		○					○					○	Go to trouble-shooting	—
24		FRONT	8 15	○		○						○					○	Go to trouble-shooting	—
25		REAR	6 13		○		○					○					○	Go to trouble-shooting	—
26		FRONT	——			○						○						Replace front main steering angle sensor or 4WS control unit	—
27		REAR	——				○					○						Replace rear main steering angle sensor or 4WS control unit	—
28		FRONT	12	○		○						○					○	Go to trouble-shooting	—
29		REAR	20		○		○					○					○	Go to trouble-shooting	—
30	WHEEL SPEED	FRONT	19					○				○					○	Go to trouble-shooting	—
31		REAR L	3 3 + 11						○		○	○					○	Go to trouble-shooting	—
32		REAR R	1 1 + 9							○	○	○					○	Go to trouble-shooting	—

Troubleshooting (4WS)

Symptom-to-System Chart

PROBLEM CODE	FAIL-SAFE (F/S) ITEM			AFFECTED														ACTION	REFERENCE PAGE
	SYSTEM	POINT	4WS CONTROL UNIT TERMINAL NUMBER	FRONT SUB STEERING ANGLE SENSOR	REAR SUB STEERING ANGLE SENSOR	FRONT MAIN STEERING ANGLE SENSOR	REAR MAIN STEERING ANGLE SENSOR	FRONT WHEEL SPEED SENSOR	*REAR LEFT WHEEL SPEED SENSOR	*REAR RIGHT WHEEL SPEED SENSOR	ABS CONTROL UNIT	4WS CONTROL UNIT	REAR ACTUATOR MOTOR	POWER SYSTEM HARNESS	ALTERNATOR	PARKING BRAKE	HARNESS CONNECTOR		
33	WHEEL SPEED	REAR R/L	3 1 3 + 11 1 + 9								○	○					○	Go to trouble-shooting	—
34	WHEEL SPEED	FRONT	19					○				○					○	Go to trouble-shooting	—
35	WHEEL SPEED	REAR L	3 3 + 11						○		○	○					○	Go to trouble-shooting	—
36	WHEEL SPEED	REAR R	1 1 + 9							○	○	○					○	Go to trouble-shooting	—
37	WHEEL SPEED	REAR L	——									○						Replace 4WS control unit	—
38	WHEEL SPEED	VEHICLE SPEED	——									○						Replace 4WS control unit	—
40	4WS CONTORL UNIT	4WS CONTROL UNIT	——									○						Replace 4WS control unit	—
41	4WS CONTORL UNIT	4WS CONTROL UNIT	——									○						Replace 4WS control unit	—
42	4WS CONTORL UNIT	4WS CONTROL UNIT	——									○						Replace 4WS control unit	—
43	4WS CONTORL UNIT	4WS CONTROL UNIT	——									○						Replace 4WS control unit	—
44	4WS CONTORL UNIT	4WS CONTROL UNIT	——									○						Replace 4WS control unit	—
45	4WS CONTORL UNIT	4WS CONTROL UNIT	——									○						Replace 4WS control unit	—
46	4WS CONTORL UNIT	4WS CONTROL UNIT	——									○						Replace 4WS control unit	—
50	CONTROL LOGIC	Motor lock	C + D −									○	○				○	Go to trouble-shooting	—
51	CONTROL LOGIC	Wheel caught in ditch; Motor mulfunction	C + D −									○	○				○	Go to trouble-shooting	—

PROBLEM CODE	FAIL-SAFE (F/S) ITEM			AFFECTED														ACTION	REFERENCE PAGE
	SYSTEM	POINT	4WS CONTROL UNIT TERMINAL NUMBER	FRONT SUB STEERING ANGLE SENSOR	REAR SUB STEERING ANGLE SENSOR	FRONT MAIN STEERING ANGLE SENSOR	REAR MAIN STEERING ANGLE SENSOR	FRONT WHEEL SPEED SENSOR	*REAR LEFT WHEEL SPEED SENSOR	*REAR RIGHT WHEEL SPEED SENSOR	ABS CONTROL UNIT	4WS CONTROL UNIT	REAR ACTUATOR MOTOR	POWER SYSTEM HARNESS	ALTERNATOR	PARKING BRAKE	HARNESS CONNECTOR		
60	POWER UNIT	MOTOR	C+•D− 33+•34−									○	○	○			○	Go to trouble-shooting	—
61			C+•D−									○	○	○			○	Go to trouble-shooting	—
62		MOTOR	33+•34−									○	○	○			○	Go to trouble-shooting	—
63												○	○	○			○	Go to trouble-shooting	—
64		4WS CONTROL UNIT	——									○						Replace 4WS control unit	—
65		4WS CONTROL UNIT	——									○						Replace 4WS control unit	—
71	TEMPORARY DRIVING CONDITIONS	——	——									○						Ask customer for symptoms, conditions	—
72		——	4									○					○	Ask customer for symptoms, conditions	—
73		——										○			○			Ask customer for symptoms, conditions	—
74		——	14									○				○	○	Ask customer for symptoms, conditions	—

SUPPLEMENTAL RESTRAINT SYSTEM (SRS) (If body maintenance is required)

Some versions of the KE, KG, KF, and KS Prelude models include a driver's airbag, located in the steering wheel hub, and a front passenger's airbag, located in the dashboard above the glove box. The SRS unit of these model versions is not part of the airbag assembly and has built-in sensors (SRS Type III).
Some other KE, KG, KF, KS model versions and the KQ model include only a driver's airbag, located in the steering wheel hub. The SRS unit of these model versions is part of the airbag assembly (SRS Type II). Information necessary to safely service the SRS is included in this Shop Manual (SRS Type III) and in the Shop Manual Supplement 62SS020 (SRS Type II). Items marked with an asterisk (*) on the contents page include, or are located near, SRS components. Servicing, disassembling or replacing these items will require special precautions and tools, and should therefore be done by an authorized Honda dealer.

⚠ WARNING

- **To avoid rendering the SRS inoperative, which could lead to personal injury or death in the event of a severe frontal collision, all SRS service work must be performed by an authorized Honda dealer.**
- **Improper service procedures, including incorrect removal and installation of the SRS, could lead to personal injury caused by unintentional activation of the airbags.**
- **Do not bump the SRS unit. Otherwise, the system may fail in case of a collision, or the airbags may deploy when the ignition switch is ON (II) (SRS Type III).**
- **All SRS electrical wiring harnesses are covered with yellow insulation. Related components are located in the steering column, front console, dashboard, dashboard lower panel, and in the dashboard above the glove box. Do not use electrical test equipment on these circuits.**
- **Service work nearby and in the areas listed below may affect the SRS and must therefore be performed by an authorized Honda dealer.**

SRS Type II:
- Steering wheel (Be careful not to bump the steering wheel as the SRS unit (sensors), inflator, etc. are located in it.)
- Behind the dashboard
- Under-dash fuse/relay box

SRS Type III:
- Steering wheel
- Behind the dashboard
- Under-dash fuse/relay box
- Front console
- Car stereo units and other accessories
- A/C heater

Body

Consoles
Replacement **20-3**
Doors
Index **20-2**
Rear Emblem
Installation **20-4**
Trunk Spoiler
Replacement **20-4**

Outline of Model Changes

- The center console has been changed.
- The door construction has been changed.
- The rear emblem has been added.
- The trunk spoiler with the high mount brake light has been added (KQ model VTEC).

Index

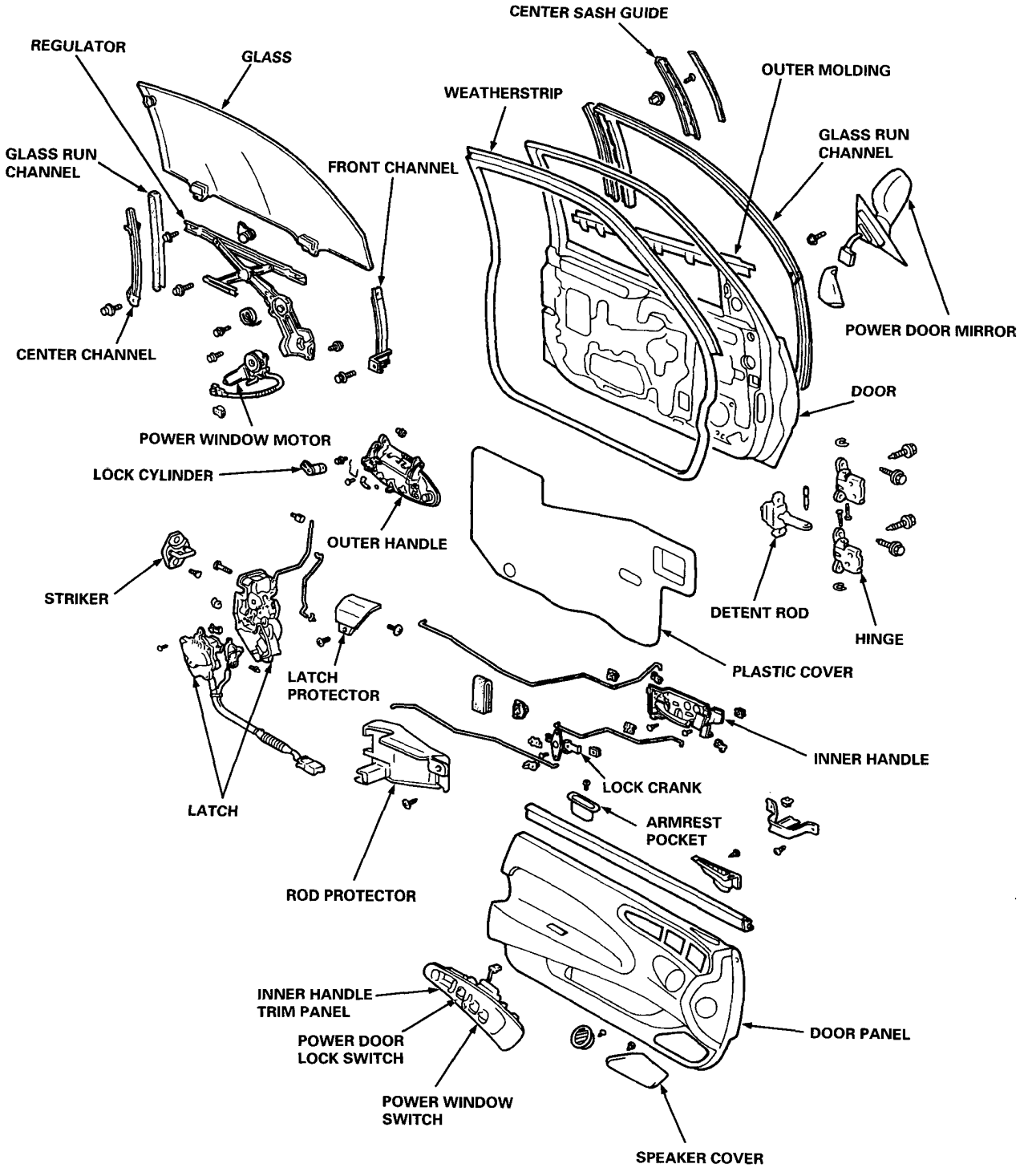
CENTER SASH GUIDE
REGULATOR
GLASS
OUTER MOLDING
WEATHERSTRIP
GLASS RUN CHANNEL
GLASS RUN CHANNEL
FRONT CHANNEL
POWER DOOR MIRROR
CENTER CHANNEL
DOOR
POWER WINDOW MOTOR
LOCK CYLINDER
OUTER HANDLE
STRIKER
DETENT ROD
HINGE
PLASTIC COVER
LATCH PROTECTOR
INNER HANDLE
LOCK CRANK
LATCH
ARMREST POCKET
ROD PROTECTOR
INNER HANDLE TRIM PANEL
DOOR PANEL
POWER DOOR LOCK SWITCH
POWER WINDOW SWITCH
SPEAKER COVER

Replacement

CAUTION:
- **When removing and installing the front console, take care not to damage the SRS wire harnesses.**
- **Refer to page 23-34 in the SRS sub-section.**
- **To prevent damage to the shift lever knob and shift indicator trim ring, wrap them with a shop towel.**
- **When prying with a flat tip screwdriver, wrap it with protective tape to prevent damage.**

NOTE:
- Take care not to scratch the front and center consoles and dashboard.
- Slide the front seat fully to the rear.
- LHD is shown, RHD is symmetrical.

▶ : Clip locations

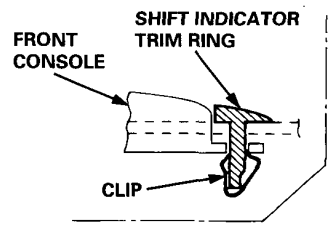

Manual transmission model:

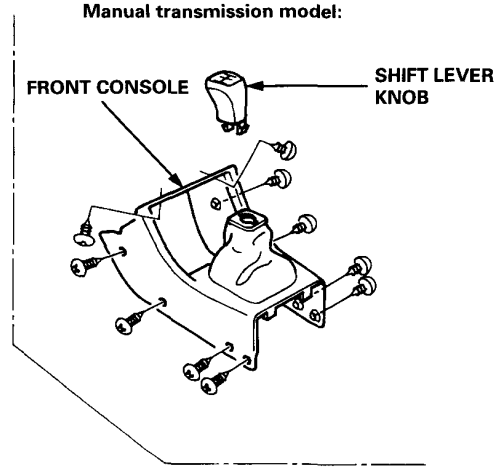

Automatic transmission model:

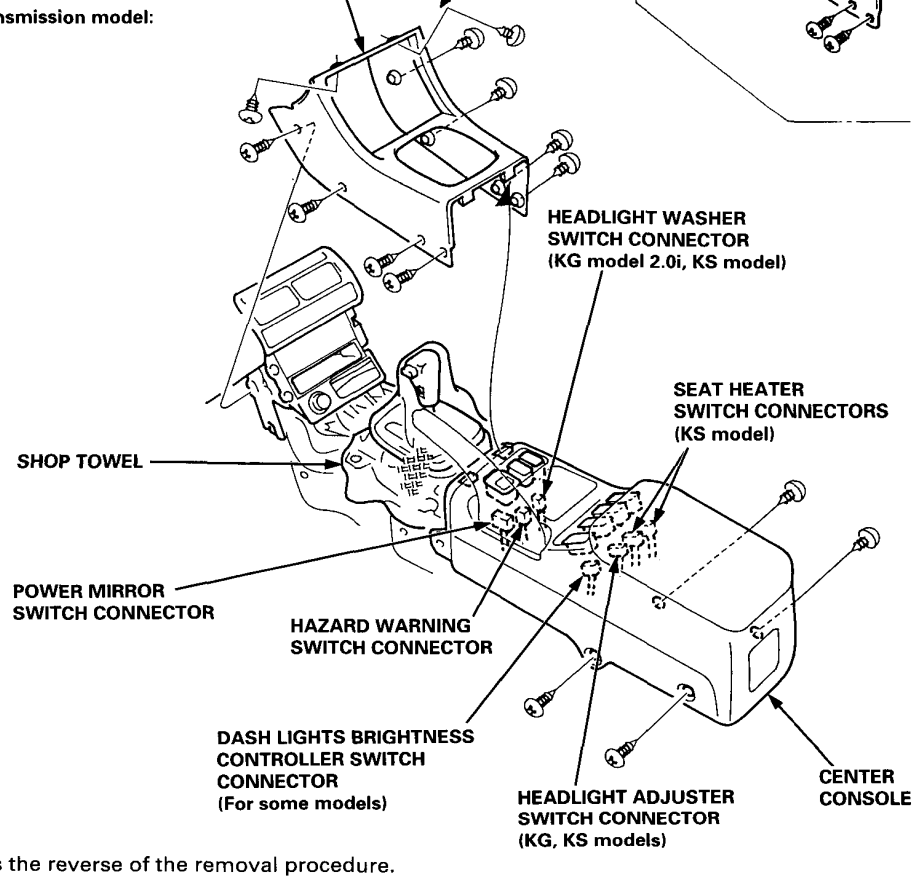

Installation is the reverse of the removal procedure.

Trunk Spoiler/Rear Emblem

Trunk Spoiler Replacement

KQ model (VTEC):

CAUTION:
When removing the trunk spoiler, use protective tape or a shop towel on the trunk lid and trunk spoiler to prevent damage.

TRUNK SPOILER
1. Open the trunk lid.
2. Disconnect and detach the high mount brake light connector.
   NOTE:
   Before pulling out the wire harness, tie a string to the connector so you can pull it back in when the trunk spoiler is reinstalled.
3. Remove the mounting bolts on both sides.
4. While holding the trunk spoiler, detach the stud bolts from the grommets. Lift and remove the trunk spoiler.

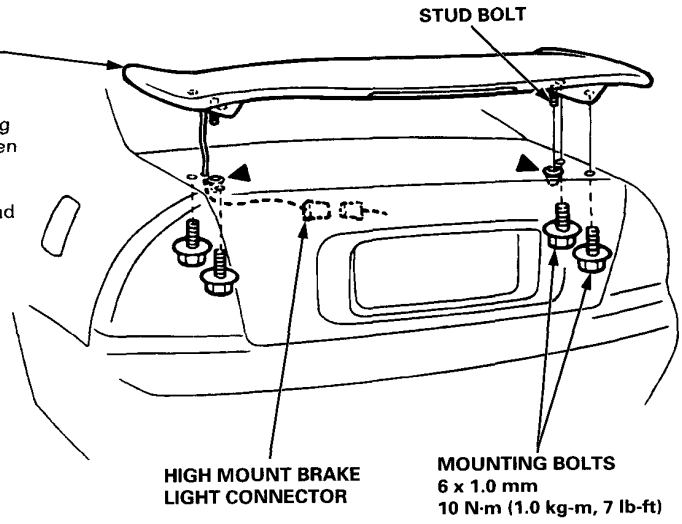

Installation is the reverse of the removal procedure.

NOTE:
Take care not to scratch the body.

Rear Emblem Installation

Apply the rear emblem where shown.

NOTE:
- Before applying, clean the trunk lid surface with a sponge dampened in alcohol.
- After cleaning, keep oil, grease and water from getting on the surface.
- When applying, make sure there are no wrinkles in the rear emblem.

Attachment Point: (Reference) Unit: mm (in)

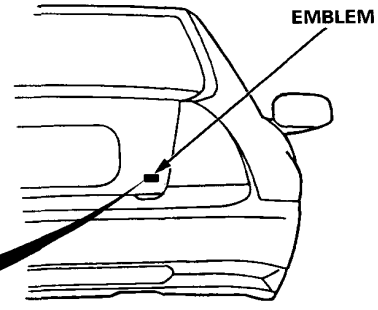

KE, KF, KG, KS models (VTEC):

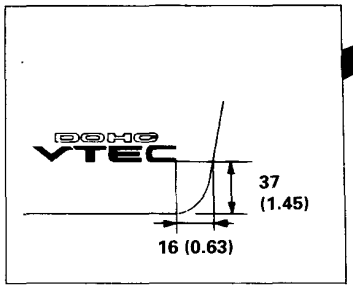

Air Conditioning

Description
- Outline 22-2

Compressor
- Relief Valve Replacement 22-3

A/C Service Tips 22-4

A/C System Service
- Discharge 22-5
- Evacuation 22-6
- Charging 22-7
- Leak Test 22-8
- Performance Test 22-9

Outline of Model Changes

Due to the introduction of new refrigerant HFC-134a (R-134a), part descriptions, warnings and handling information were rewritten accordingly.

Description

Outline

The air conditioner system delivers cooled air into the passenger compartment by circulating refrigerant through the system as shown below.

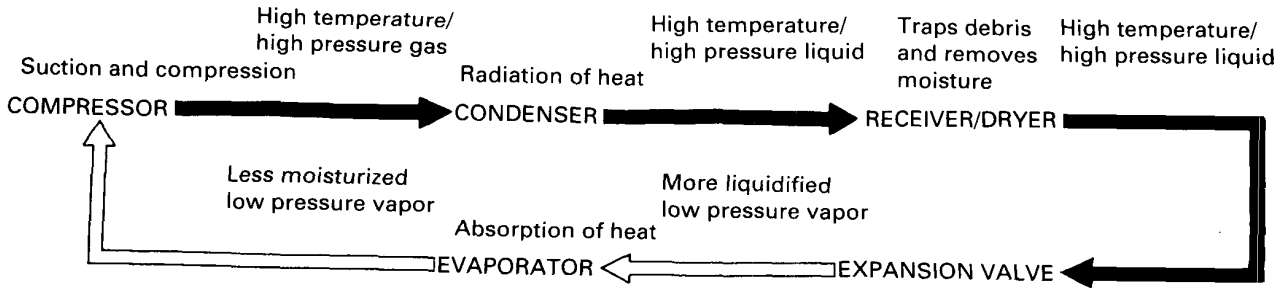

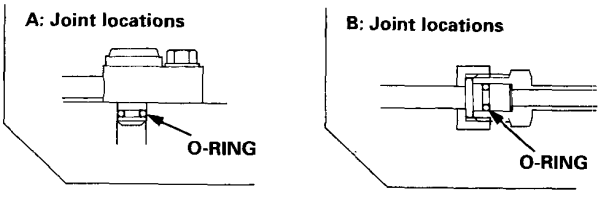

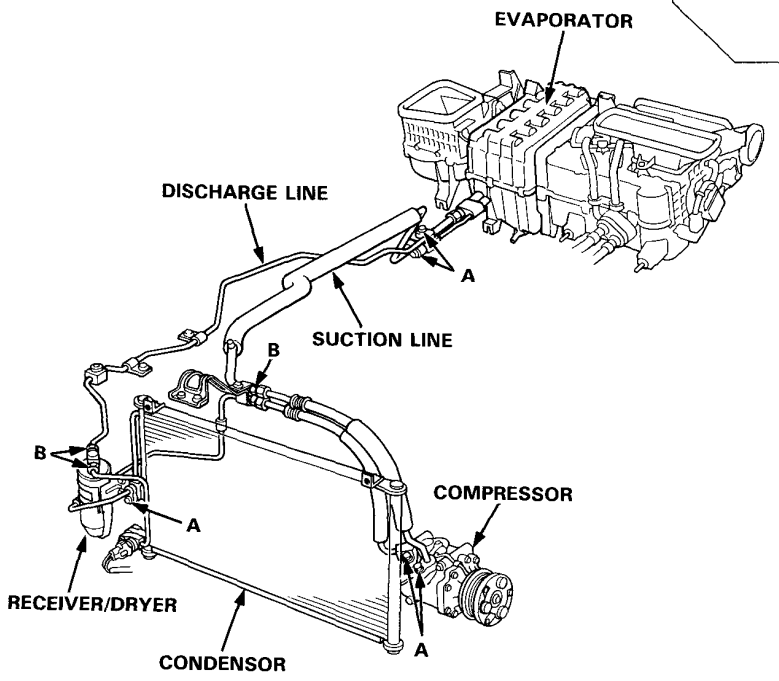

This car uses HFC-134a (R-134a) refrigerant which does not contain chlorofluorocarbons. Pay attention to the following service items:

- Do not mix refrigerants CFC-12 (R-12) and HFC-134a (R-134a). They are not compatible.
- Use only the recommended polyalkyleneglycol (PAG) refrigerant oil (SP-10: P/N 38899-P13-003) designed for the R-134a compressor. Intermixing the recommended (PAG) refrigerant oil with any other refrigerant oil will result in compressor failure.
- All A/C system parts (compressor, discharge line, suction line, evaporator, condenser, receiver/dryer, expansion valve, O-rings for joints) have to be proper for refrigerant R-134a. Do not confuse with R-12 parts.
- Use a halogen gas leak detector designed for refrigerant R-134a.
- Use a vacuum pump adapter which is equipped with a check valve to prevent the backflow of the vacuum pump oil.
- Separate the manifold gauge sets (pressure gauges, hoses, joints) for refrigerants R-12 and R-134a. Do not confuse them.

Compressor

Relief Valve Replacement

1. Discharge the refrigerant. (see page 22-5)

2. Remove the relief valve and the O-ring from the compressor.

   NOTE: Be sure to use the right O-ring for HFC-134a (R-134a) to avoid leakage.

   CAUTION: Be careful not to spill compressor oil, and make sure there is no foreign matter in the system.

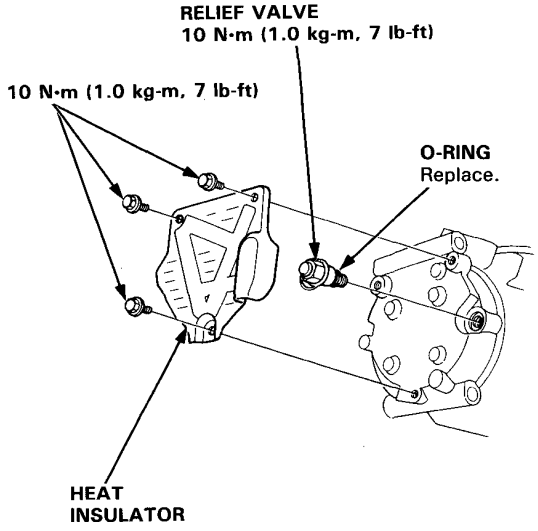

Install and tighten the relief valve.

- Clean the mating surfaces.
- Replace the O-ring with a new one at the relief valve, and apply a thin coat of refrigerant oil (SP-10: P/N 38899-P13-003) before installing it.

  NOTE:
  - To avoid contamination, do not return the oil to the container once dispensed, and never mix it with other refrigerant oils.
  - Immediately after using the oil, replace the cap on the container, and seal it to avoid moisture absorption.
  - Do not spill the refrigerant oil on the car; it may damage the paint; if the refrigerant oil contacts the paint, wash it off immediately.
- Check the relief valve for leaks.

A/C Service Tips

The air conditioning system uses HFC-134a (R-134a) refrigerant and polyalkyleneglycol (PAG) refrigerant oil "SP-10" (P/N 38899-P13-003), which are not compatible with CFC-12 (R-12) refrigerant and mineral oil. Do not use R-12 refrigerant or mineral oil in this system and do not attempt to use R-12 servicing equipment; damage to the air conditioning system or your servicing equipment will result.
Separate the manifold gauge sets (pressure gauges, hoses, joints) for refrigerants R-12 and R-134a. Do not confuse them.

⚠ WARNING When handling refrigerant (R-134a):
- **always wear eye protection.**
- **do not let refrigerant get on your skin or in your eyes. If it does:**
  - **do not rub your eyes or skin.**
  - **splash large quantities of cool water into your eyes or on your skin.**
  - **rush to a physician or hospital for immediate treatment. Do not attempt to treat it yourself.**
- **keep refrigerant containers (cans of R-134a) stored below 40°C (104°F).**
- **keep away from open flame. Refrigerant, although non-flammable, will produce poisonous gas if burned.**
- **work in well-ventilated area. Refrigerant evaporates quickly, and can force all the air out of a small, enclosed area.**

1. Always disconnect the negative cable from the battery whenever replacing air conditioning parts.
2. Keep moisture and dust out of the system. When disconnecting any lines, plug or cap the fittings immediately; don't remove the caps or plugs until just before you reconnect each line.
3. Before connecting any hose or line, apply a few drops of refrigerant oil (SP-10: P/N 38899-P13-003) to the O-ring.
4. When tightening or loosening a fitting, use a second wrench to support the matching fitting.
5. When discharging the system, don't let refrigerant escape too fast; it will draw the compressor oil out of the system.
6. Add refrigerant oil (SP-10: P/N 38899-P13-003) after replacing the following parts:

   NOTE:
   - To avoid contamination do not return the oil to the container once it is dispensed and never mix with other refrigerant oils.
   - Immediately after using the oil, replace the cap on the container and seal it to avoid moisture absorption.
   - Do not spill the refrigerant oil on the car; it may damage the paint. If the refrigerant oil contacts the paint, wash it off immediately.

Condenser	10 mℓ (1/3 fl oz, 0.4 Imp oz)
Evaporator	30 mℓ (1 fl oz, 1.1 Imp oz)
Line or hose	10 mℓ (1/3 fl oz, 0.4 Imp oz)
Receiver/Dryer	10 mℓ (1/3 fl oz, 0.4 Imp oz)
Leakage repair	20 mℓ (2/3 fl oz, 0.7 Imp oz)
Compressor	On compressor replacement, subtract the volume of oil drained from the removed compressor from 120 mℓ (4 fl oz, 4.23 Imp oz), and drain the calculated volume of oil from the new compressor: 120 mℓ (4 fl oz, 4.23 Imp oz) − Volume of removed compressor = Draining volume. NOTE: Even if no oil is drained from the removed compressor, don't drain more than 50 mℓ (1 2/3 fl oz, 1.8 Imp oz) from the new compressor.

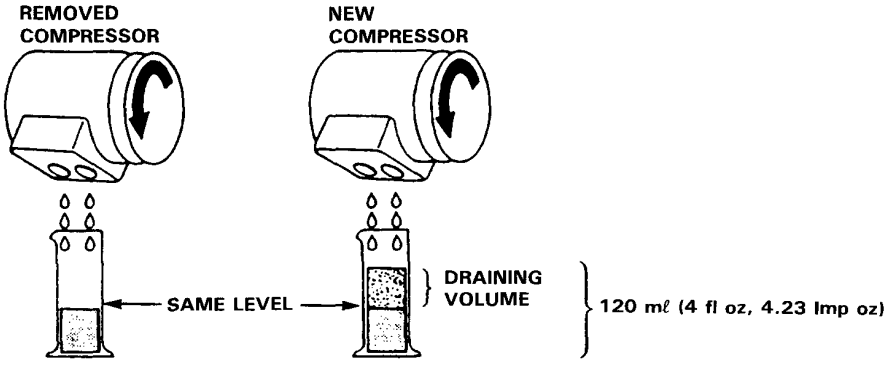

Discharge

⚠ WARNING

- **Keep away from open flames. The refrigerant, although nonflammable, will produce a poisonous gas if burned.**
- ***Work in a well-ventilated area.* Refrigerant evaporates quickly, and can force all the air out of a small enclosed area.**

NOTE: Only use a gauge set for refrigerant HFC-134a (R-134a).

1. Connect the R-134a gauges as shown.
2. Disconnect the center hose of the gauge set, and place the free end in a shop towel.
3. Open the evacuation valve (two valve gauge: evacuate stop valve).
4. Slowly open the high pressure valve slightly to let refrigerant flow from the center hose only. Do not open the valve too wide. Check the shop towel to make sure no oil is being discharged with the refrigerant.

   CAUTION: If refrigerant is allowed to escape too fast, compressor oil will be drawn out of the system.
5. After the high pressure gauge reading has dropped below 980 kPa (10 kg/cm², 140 psi), open the low side valve to discharge both high and low sides of the system.
6. Note the gauge reading, and as system pressure drops, gradually open both high and low side valves fully until both gauges indicate 0 kPa (0 kg/cm², 0 psi).

THREE VALVE GAUGE

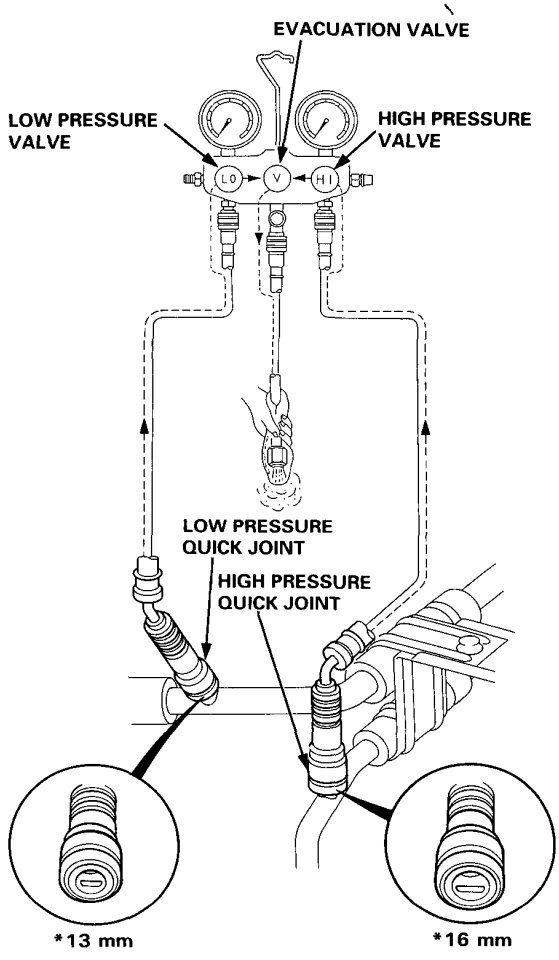

TWO VALVE GAUGE

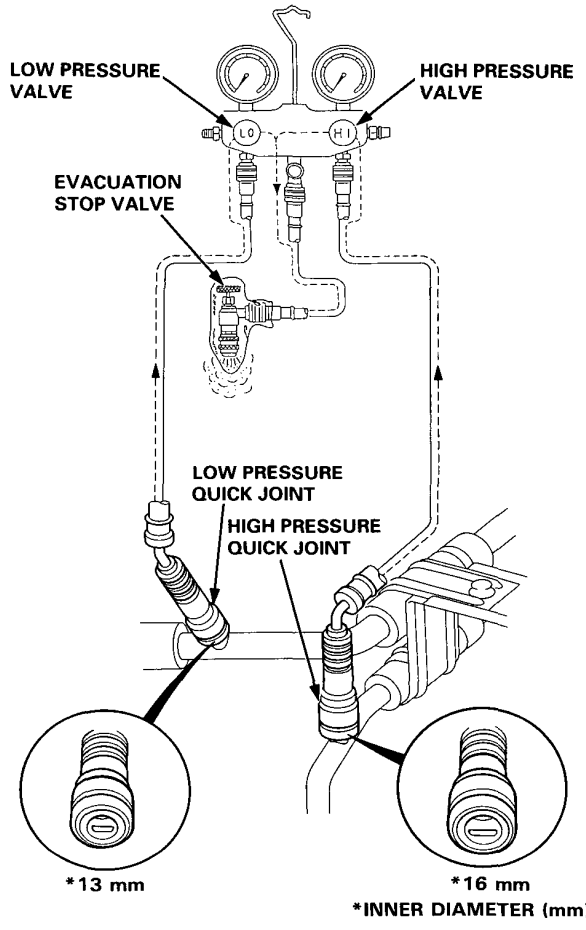

Evacuation

NOTE:
- Only use a gauge set for refrigerant HFC-134a (R-134a).
- Use a vacuum pump adapter which is equipped with a check valve to prevent the backflow of the vacuum pump oil.

1. When an A/C System has been opened to the atmosphere, such as during installation or repair, it must be evacuated using a R-134a refrigerant vacuum pump. (If the system has been open for several days, the receiver/dryer should be replaced.)

2. Connect a R-134a refrigerant gauge, pump and refrigerant containers (cans of R-134a) as shown.

   NOTE: Do not open the cans.

3. Start the pump, then open the both pressure valves, and evacuation valve (two valve gauge: evacuation stop valve). Run the pump for about 15 minutes. Close both pressure valves and the evacuation valve (two valve gauge: evacuation stop valve), and stop the pump. The low pressure gauge should indicate above 93.3 kPa (700 mmHg, 27.6 in·Hg), and remain steady with the valves closed.

   NOTE: If low pressure does not reach more than 93.3 kPa (700 mmHg, 27.6 in·Hg) in 15 minutes, there is probably a leak in the system. Check for leaks, and repair (see Leak Test).

4. If there are no leaks, open the valves and continue pumping for at least another 15 minutes. Then close both valves, and stop the pump.

THREE VALVE GAUGE

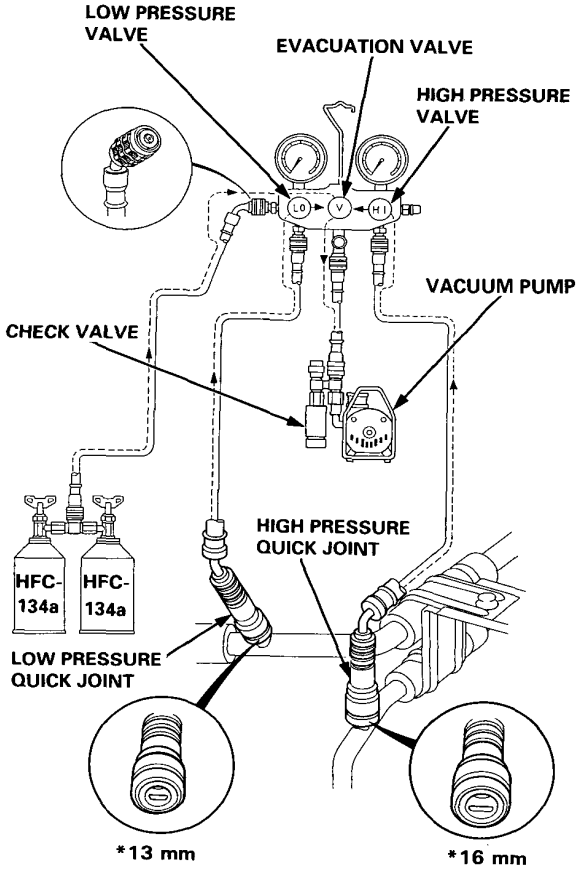

TWO VALVE GAUGE

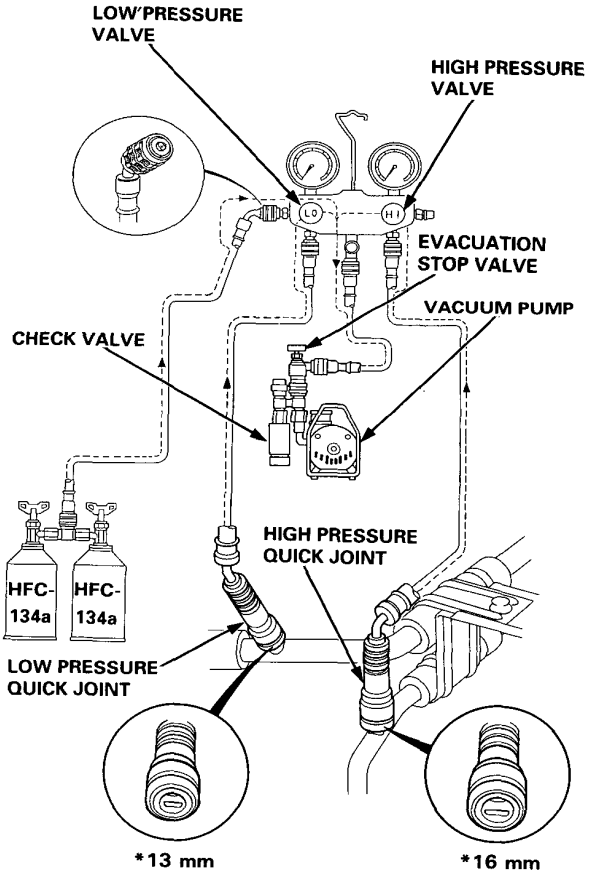

*INNER DIAMETER (mm)

Charging

NOTE:
- Only use a gauge set for refrigerant HFC-134a (R-134a).
- Use a vacuum pump adapter which is equipped with a check valve to prevent the backflow of the vacuum pump oil.

⚠ WARNING When handling refrigerant (R-134a):
- **always wear eye protection.**
- **do not let refrigerant get on your skin or in your eyes. If it does:**
  - **— do not rub your eyes or skin.**
  - **— splash large quantities of cool water in your eyes or on your skin.**
  - **— rush to a physician or hospital for immediate treatment. Do not attempt to treat it yourself.**
- ***keep refrigerant containers (cans of R-134a) stored* below 40°C (104°F).**
- **keep away from open flame. Refrigerant, although non-flammable, will produce poisonous gas if burned.**
- **work in well-ventilated area. Refrigerant evaporates quickly, and can force all the air out of a small, enclosed area.**

CAUTION: Do not overcharge the system; the compressor will be damaged.

1. After the leak test, check that the high pressure valve is closed, and start the engine.

   NOTE: Run the engine below 1,500 rpm (min^{-1}).

2. Open the front door.
   Turn the A/C switch ON.
   Set the temperature control lever to MAX. COOL.
   Set the mode control switch on VENT.
   Slide the heater fan switch to MAX.

3. Open the low pressure valve, and charge with R-134a refrigerant.

   ⚠ WARNING
   - **Do not open the high pressure valve.**
   - **Do not turn the cans upside down.**

4. Charge the system with refrigerant capacity.
   Refrigerant capacity $\begin{cases} \text{LHD: } 700^{+0}_{-50}\text{ g } (24.7^{+0}_{-1.8}\text{ oz}) \\ \text{RHD: } 650^{+0}_{-50}\text{ g } (22.9^{+0}_{-1.8}\text{ oz}) \end{cases}$

5. When fully charged, close the low pressure valve and the refrigerant cans. Check the system.

6. Stop the engine, and disconnect the charge hose quickly.

7. Check the system for leaks using a leak detector proper to refrigerant R-134a.

   NOTE: Particularly check for leaks around the compressor, condenser, and receiver/dryer.

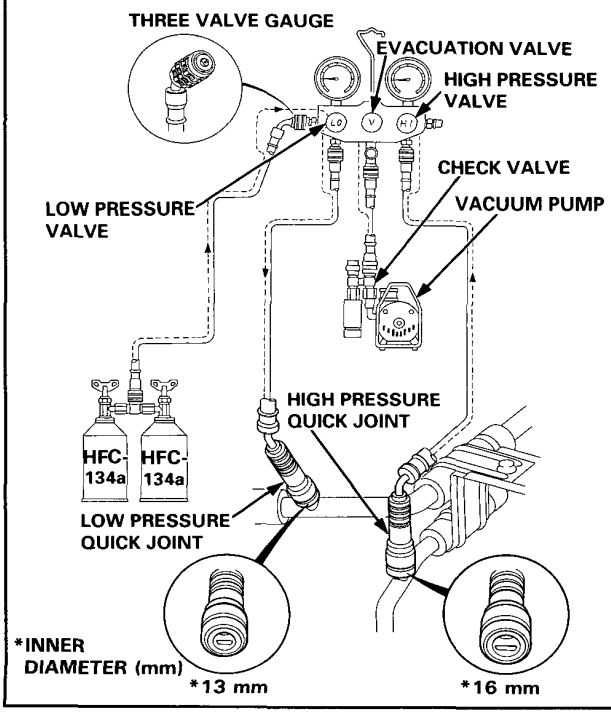

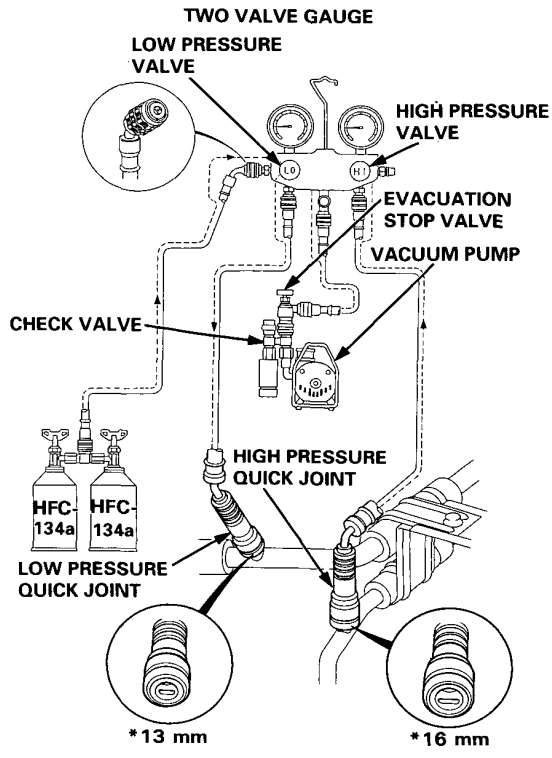

Leak Test

NOTE:
- Only use a gauge set for refrigerant HFC-134a (R-134a).
- Use a vacuum pump adapter which is equipped with a check valve to prevent the backflow of the vacuum pump oil.

⚠ WARNING When handling refrigerant (R-134a):
- **always were eye protection.**
- **do not let refrigerant get on your skin or in your eyes. If it does:**
  - **— do not rub your eyes or skin.**
  - **— splash large quantities of cool water in your eyes or on your skin.**
  - **— rush to a physician or hospital for immediate treatment. Do not attempt to treat it yourself.**
- **keep refrigerant containers (cans of R-134a) stored below 40°C (104°F).**
- **keep away from open flame. Refrigerant, although non-flammable, will produce poisonous gas if burned.**
- **work in well-ventilated area. Refrigerant evaporates quickly, and can force all the air out of a small, enclosed area.**

1. Close the evacuation valve (two valve gauge; evacuation stop valve).
2. Open the cans.
3. Open high pressure valve to charge the system to about 98 kPa (1.0 kg/cm², 14 psi), then close it.

   NOTE: Close the low pressure valve.
4. Check the system for leaks using a leak detector proper to refrigerant R-134a.

   NOTE: Particularly check for leaks around the compressor, condenser and receiver/dryer.
5. If you find any leaks, tighten the joint nuts and bolts to the specified torque.
6. Recheck the system for leaks using a leak detector.
7. If you find leaks that require the system to be opened (to repair or replace hoses, fittings, etc.), release any charge in the system.
8. After checking and repairing leaks, the system must be evacuated (see System Evacuation on page 22-6).

THREE VALVE GAUGE

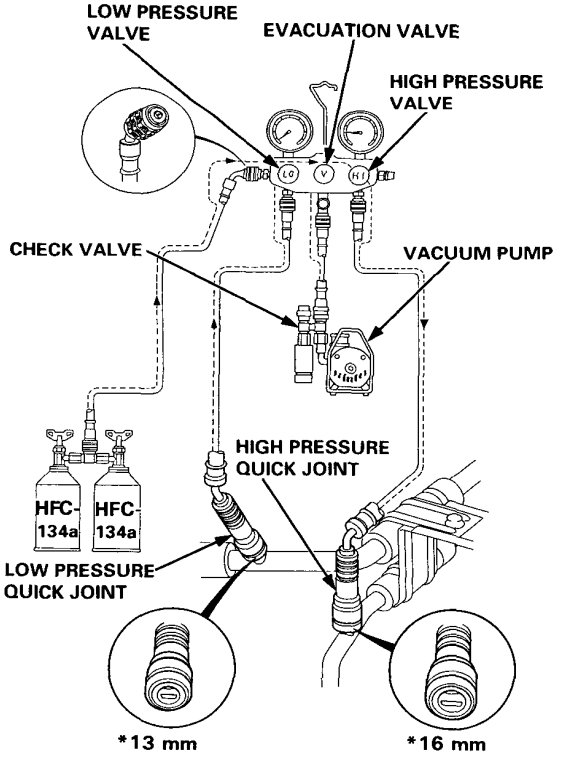

TWO VALVE GAUGE

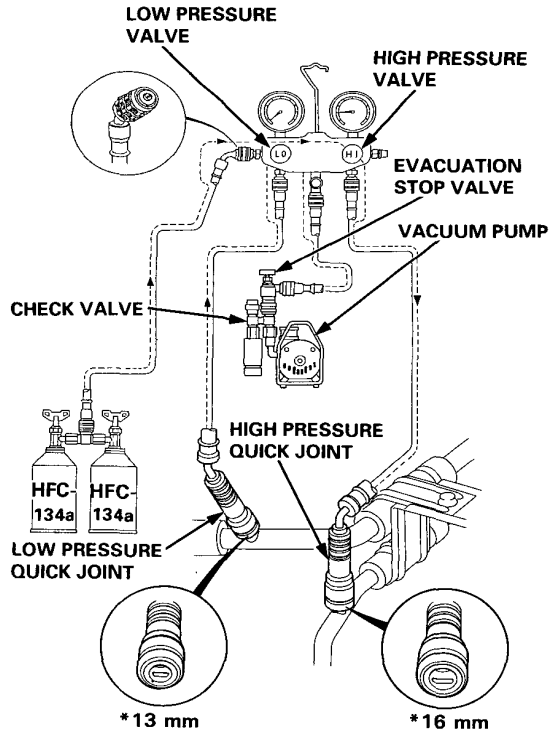

*INNER DIAMETER (mm)

Performance Test

The performance test will help determine if the air conditioner system is operating within specifications.

NOTE:
- Only use a gauge set for refrigerant HFC-134a (R-134a).
- Use a vacuum pump adapter which is equipped with a check valve to prevent the backflow of the vacuum pump oil.

1. Connect the R-134a gauges as shown.

2. Insert a thermometer in the center vent outlet. Determine the relative humidity and ambient air temperature by a portable weather station or calling the local weather station.

3. Test conditions:
   - Avoid direct sunlight.
   - Open hood.
   - Open front doors.
   - Set the temperature control lever to MAX. COOL, push the mode control button to VENT, and push the recirculation button.
   - Slide the heater fan switch to MAX.
   - Run the engine at 1,500 rpm (min^{-1}).
   - No driver or passengers in vehicle.

4. After running the air conditioning for 10 minutes under the above-mentioned test conditions, read the delivery temperature from the thermometer in the dash vent, and the high and low system pressures from the A/C gauges.

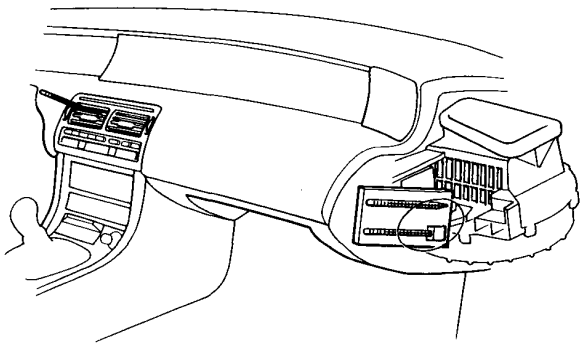

THREE VALVE GAUGE

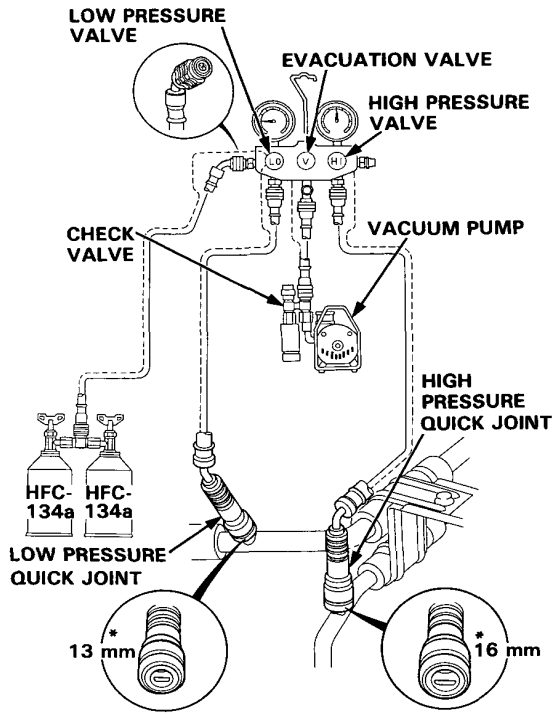

TWO VALVE GAUGE

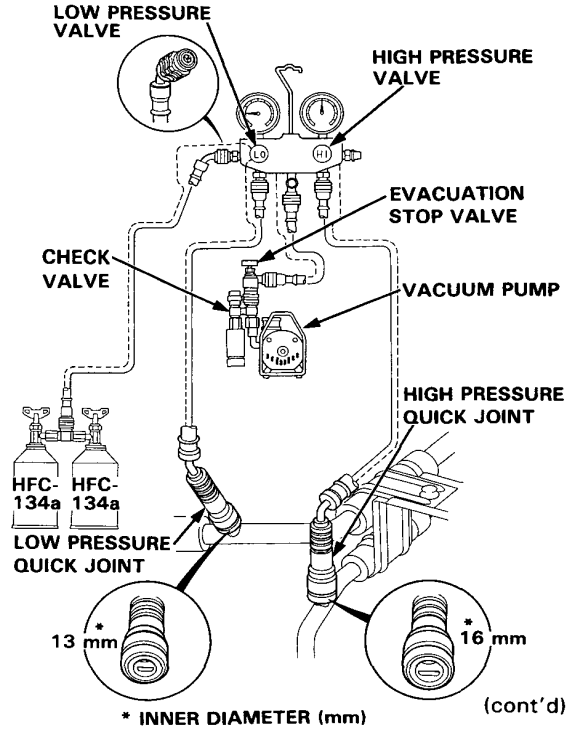

* INNER DIAMETER (mm)

(cont'd)

Performance Test (cont'd)

5. To complete the charts:
   - Mark the delivery temperature along the vertical line.
   - Mark the intake temperature (ambient air temperature) along the bottom line.
   - Draw a line straight up from the air temperature to the humidity.
   - Mark a point one line above and one line below the humidity level. (10% above and 10% below the humidity level)
   - From each point, draw a horizontal line across the delivery temperature.
   - The delivery temperature should fall between the two lines.
   - Complete the low side pressure test and high side pressure test in the same way.
   - Any measurements outside the line may indicate the need for further inspection.

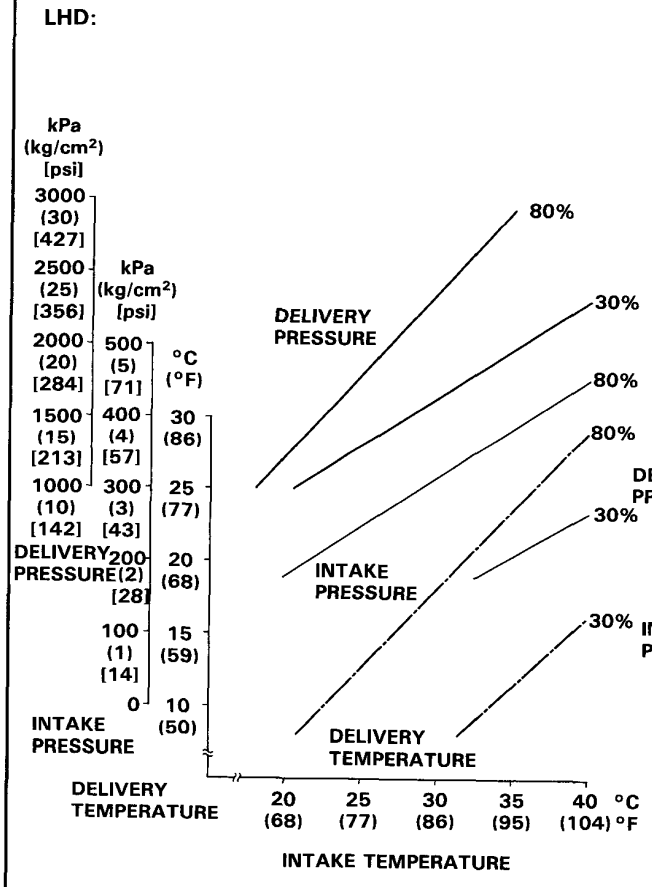

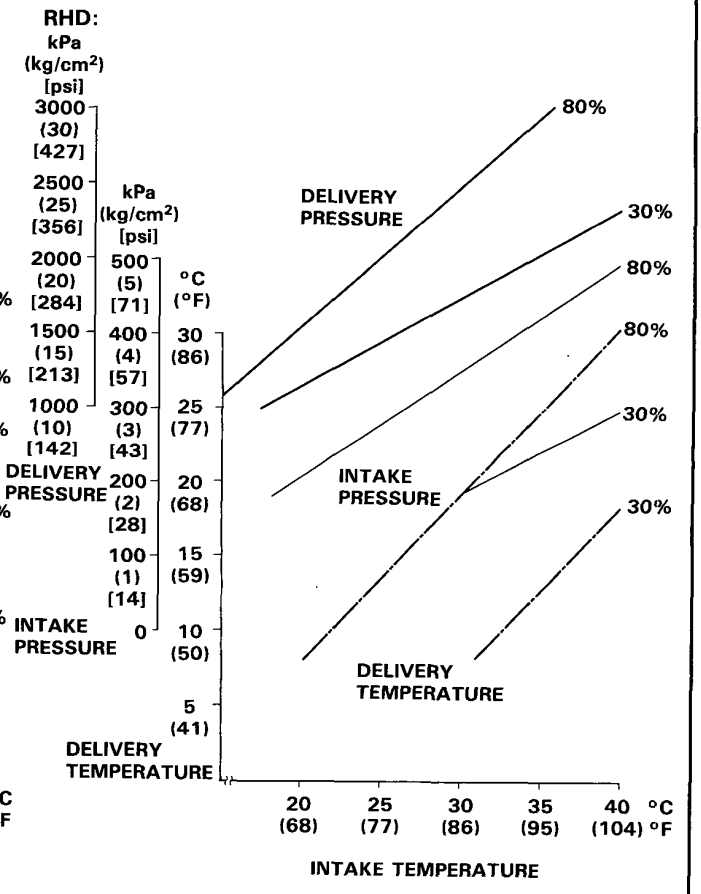

SUPPLEMENTAL RESTRAINT SYSTEM (SRS)

Some versions of the KE, KG, KF, and KS Prelude models include a driver's airbag, located in the steering wheel hub, and a front passenger's airbag, located in the dashboard above the glove box. The SRS unit of these model versions is not part of the airbag assembly and has built-in sensors (SRS Type III).
Some other KE, KG, KF, KS model versions and the KQ model include only a driver's airbag, located in the steering wheel hub. The SRS unit of these model versions is part of the airbag assembly (SRS Type II). Information necessary to safely service the SRS is included in this Shop Manual (SRS Type III) and in the Shop Manual Supplement 62SS020 (SRS Type II). Items marked with an asterisk (*) on the contents page include, or are located near, SRS components. Servicing, disassembling or replacing these items will require special precautions and tools, and should therefore be done by an authorized Honda dealer.

⚠ WARNING

- **To avoid rendering the SRS inoperative, which could lead to personal injury or death in the event of a severe frontal collision, all SRS service work must be performed by an authorized Honda dealer.**
- **Improper service procedures, including incorrect removal and installation of the SRS, could lead to personal injury caused by unintentional activation of the airbags.**
- **Do not bump the SRS unit. Otherwise, the system may fail in case of a collision, or the airbags may deploy when the ignition switch is ON (II) (SRS Type III).**
- **All SRS electrical wiring harnesses are covered with yellow insulation. Related components are located in the steering column, front console, dashboard, dashboard lower panel, and in the dashboard above the glove box. Do not use electrical test equipment on these circuits.**
- **Service work nearby and in the areas listed below may affect the SRS and must therefore be performed by an authorized Honda dealer.**

SRS Type II:
- Steering wheel (Be careful not to bump the steering wheel as the SRS unit (sensors), inflator, etc. are located in it.)
- Behind the dashboard
- Under-dash fuse/relay box

SRS Type III:
- Steering wheel
- Behind the dashboard
- Under-dash fuse/relay box
- Front console
- Car stereo units and other accessories
- A/C heater

Electrical

Special Tools 23-2
*Ignition System (KQ model)
Ignition Timing Inspection and Setting 23-3
Idle Speed Inspection 23-4
Spark Plug Inspection 23-4
*Shift Lever Position Indicator (With Luminescent Gauges)
Circuit Diagram 23-5
*Gauge Assembly (With Luminescent Gauges)
Component Location Index 23-6
Gauge/Terminal Locations Index ... 23-7
Circuit Diagram 23-9
Bulb Locations 23-14
*Interlock System (KQ model) 23-16
Ceiling/Spot Lights (KQ and KY models) 23-17
Brake/High Mount Brake Lights
Circuit Diagram 23-18
*Turn Signal/Hazard Flasher System
Circuit Diagram 23-20
*Dash Lights Brightness Control (With Luminescent Gauges)
Component Location Index 23-22
Circuit Diagram 23-23
Power Windows
Circuit Diagram 23-25
Headlight Adjuster (KG and KS models) 23-27
Seat Heaters (KS model) 23-27
Power Mirrors 23-27
Wipers/Washers (KG and KS models) 23-27
*Supplemental Restraint System (SRS Type III) 23-29

***Read SRS precautions on page 23-34, then install the short connector(s) on the airbag(s) before working in these areas.**

Outline of Model Changes

- Ignition System: A new engine type (H22A1) has been added to the KQ model.
- Shift Lever Position Indicator: The circuit with luminescent gauges have been changed.
- Gauge Assembly: A new main gauge (luminescent gauges) has been adapted for some models, and a new indicator light has been added to some models.
- Interlock System: The connectors of the KQ model have been changed.
- Ceiling/Spot Lights: These lights has been added to the KQ and KY models.
- Brake/High Mount Brake Lights: The failure sensors of all models have been changed.
- Turn Signal/Hazard Flasher System: The circuits of all models have been changed.
- Dash Lights Brightness Control: The controller locations and circuits of some models have been changed.
- Power Windows: The driver's switch assembly has been changed.
- Headlight Adjuster: The location of the headlight adjuster switch has been changed.
- Seat Heaters: The location of the seat heater switches have been changed.
- Power Mirrors: The location of the power mirror switch has been changed.
- Wipers/Washers: The location of the headlight washer switch has been changed.
- Supplemental Restraint System (SRS): The SRS type III has been added.

Special Tools

Ref. No.	Tool Number	Description	Qty.	Page Reference
①	07PAZ – 0010100	SCS Short Connector	1	23-39
②	07HAZ – SG00500	Deployment Tool	1	23-72
③	07MAZ – SP00100	Short Connector A Set	1	23-52
④	07MAZ – SP00500	Test Harness B	1	23-45
⑤	07LAZ – SL40300	Test Harness C	1	23-52
⑥	07QAZ – SR30100	Jumper Wire	4	23-45

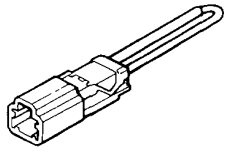

①

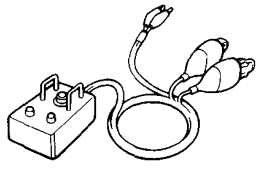

②

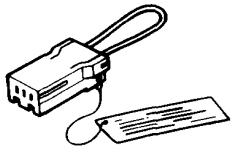

③

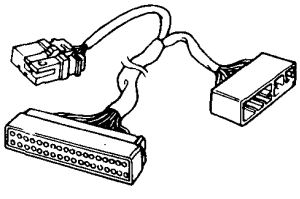

④

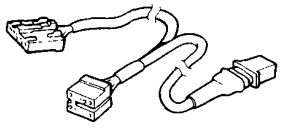

⑤

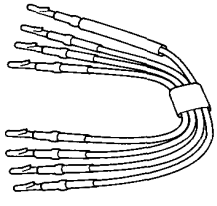

⑥

Ignition Timing Inspection and Setting (H22A1 engine)

CAUTION:
- ***All SRS electrical wiring harnesses are covered with yellow outer insulation.***
- **Replace the entire affected SRS harness assembly if it has an open circuit or damaged wiring.**
- ***Before disconnecting the SRS wiring harness, turn the ignition switch off, disconnect the negative and positive battery cables, and wait at least three minutes.***

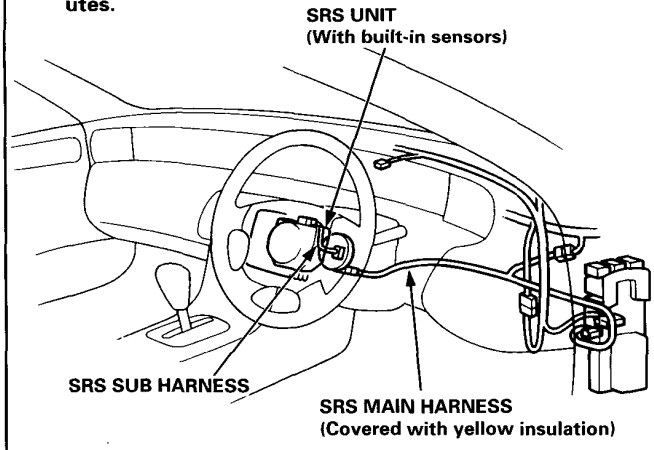

1. Start the engine and allow it to warm up (radiator fan comes on).

2. *Pull out the service check connector located under* the middle of the dash. Connect the BLU/WHT and BRN/WHT terminals with a jumper wire.

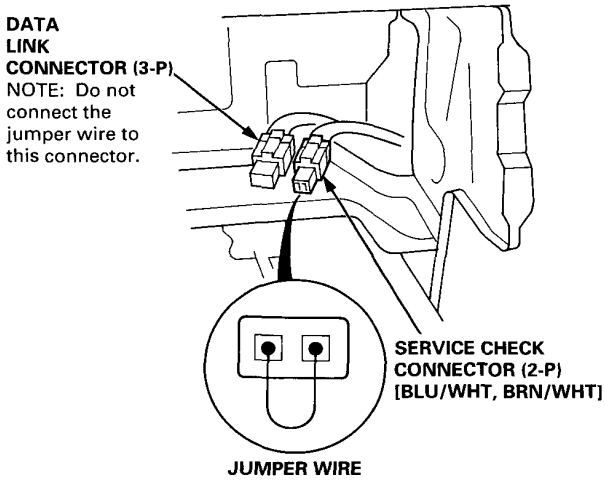

3. Check the idle speed.

4. Connect a timing light to the No. 1 ignition wire. *Remove the rubber plug from the "window" in the* flywheel housing.
   While the engine idles, point the light toward the pointer on the flywheel.

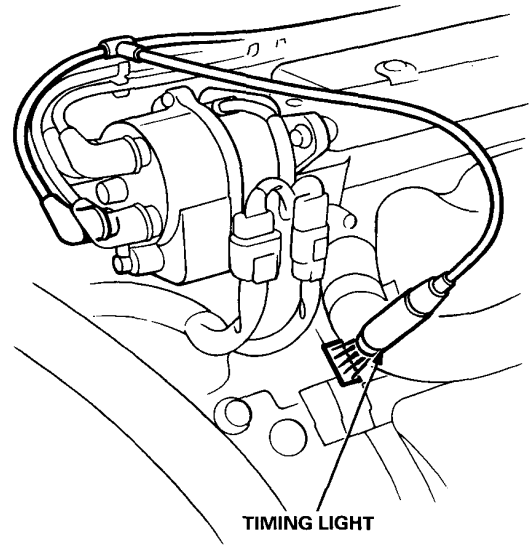

5. Adjust ignition timing, if necessary, to the following *specifications:*

Ignition Timing	15° ± 2° BTDC (RED) at 700 ± 50 min^{-1} (rpm) in neutral

NOTE:
- Shift lever must be in neutral.
- All electrical systems should be turned OFF.

6. If it is necessary to adjust the ignition timing, loosen the distributor mounting bolts, and turn the distributor housing counterclockwise to advance the timing, or clockwise to retard the timing.

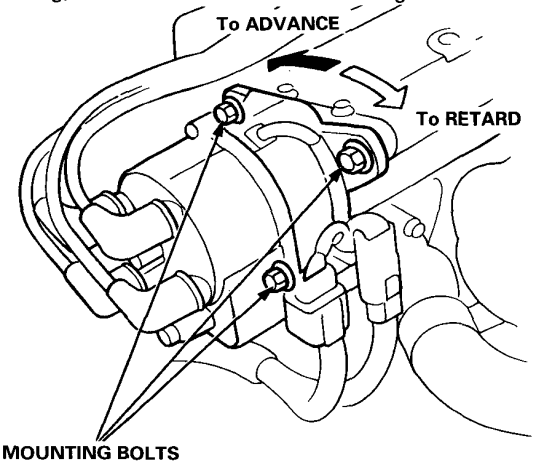

7. Tighten the mounting bolts and recheck timing.

8. Remove the jumper wire from the service check connector (2-P) and reinstall the rubber plug in the inspection window.

Ignition System (KQ model)

Idle Speed Inspection (H22A1 engine)

1. Start the engine and allow it to warm up (radiator fan comes on).

2. Connect a tachometer to the test tachometer connector.

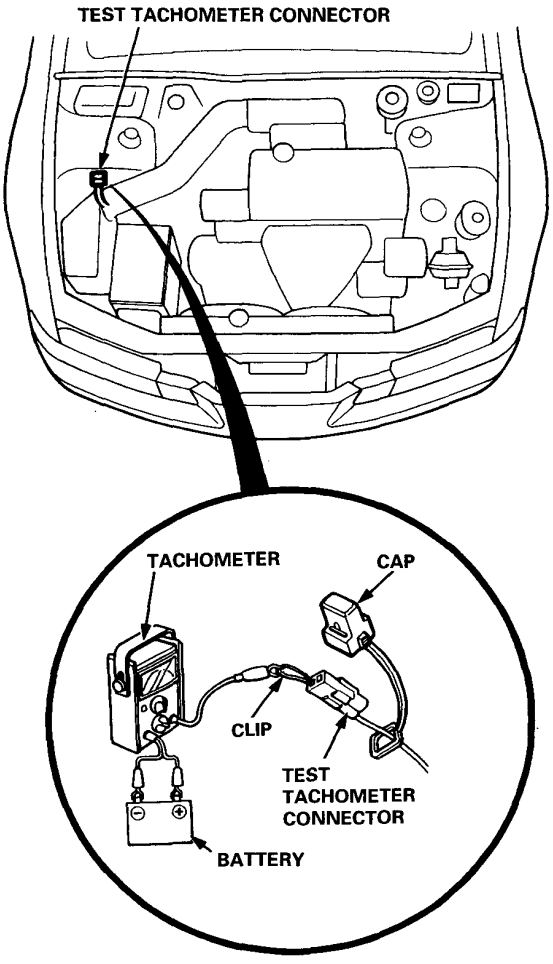

Idle speed	700 ± 50 min^{-1} (rpm) in neutral

NOTE: All electrical systems should be turned OFF.

3. Adjust the idle speed if necessary (see section 11).

Spark Plug Inspection (H22A1 engine)

1. Check the electrode gap.

   - Platinum tip plugs are used for the H22A1 engine. If the electrode gap is not within the specification, do not adjust the gap; replace the plug with a new one.

Electrode Gap

Standard	$1.1 {}^{+0}_{-0.1}$ mm ($0.043 {}^{+0}_{-0.004}$ in)

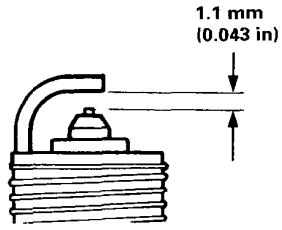

NOTE: Use only the spark plugs listed below.

Spark Plugs

PZFR6F-11 (NGK) PKJ20CR-L11 *(ND)	For all normal driving.
PFR7G-11 (NGK) PK22PR-L11 *(ND)	For hot climates or continuous high speed driving.

*(ND): NIPPONDENSO

4. Apply a small quantity of anti-seize compound to the plug threads.

5. Screw the plugs into the cylinder head finger-tight, then torque them to 18 N·m (1.8 kg-m, 13 lb-ft).

Shift Lever Position Indicator

Circuit Diagram (With Luminescent Gauges)

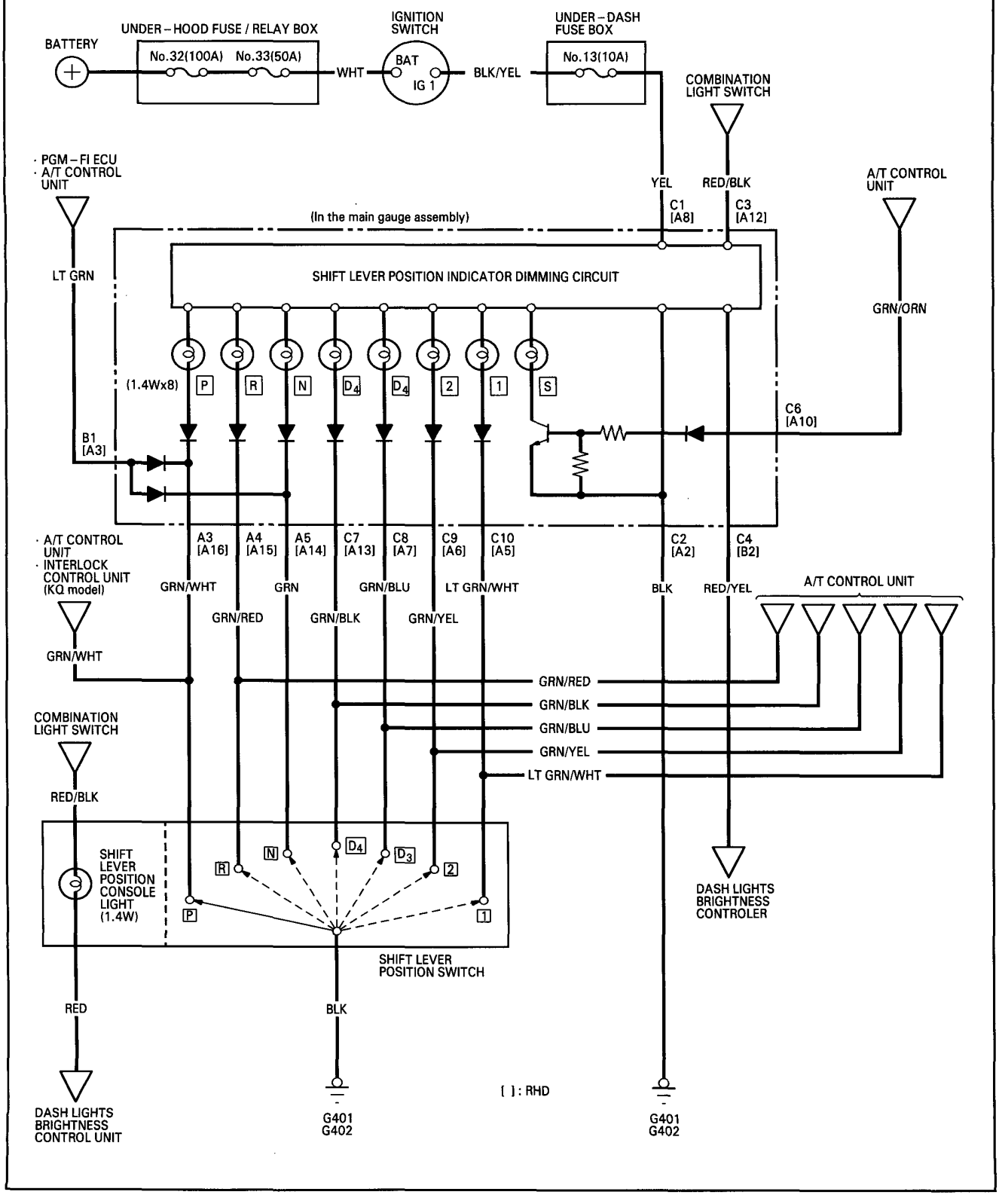

Gauge Assembly (With Luminescent Gauges)

Component Location Index

CAUTION:

- **All SRS wire harnesses are covered with yellow insulation.**
- **Replace the entire affected SRS harness assembly if it has an open circuit or damaged wiring.**
- **Before disconnecting the SRS wire harness, turn the ignition switch OFF, disconnect the battery negative cable, then disconnect the positive cable, and wait at least three minutes.**
- **Whenever the ignition switch is ON (II), or has been turned OFF for less than three minutes, be careful not to bump the SRS unit; the airbags could accidentally deploy and cause damage or injuries.**
- **Before you disconnect any part of an SRS wire harness, connect the short connectors (RED) to the airbags (SRS type III).**
- **For additional precautions, refer to page 23-34 in the SRS sub-section.**

SRS Type II:

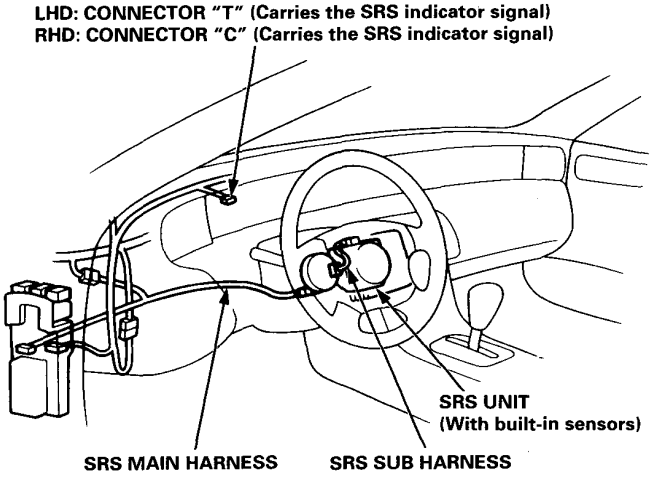

NOTE: LHD type is shown, RHD type is symmetrical.

SRS Type III:

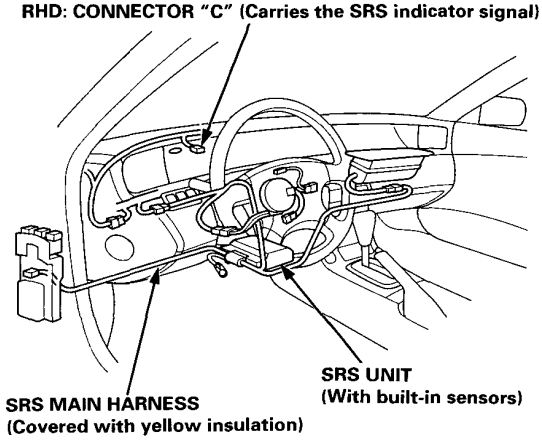

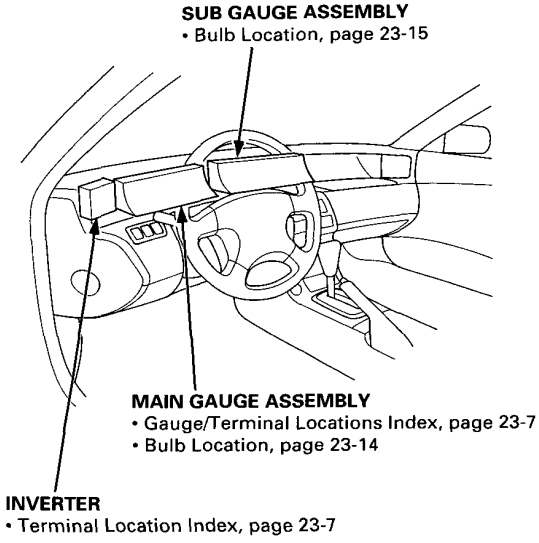

Description:

The main gauge assembly of some models except KT and KY completely blackens when the ignition switch is turned off to achieve a uniform appearance of the entire instrument panel. It employs cathode tubes instead of some of the bulbs. An inverter changes battery D.C. into A.C., and supplies it to the cathode tubes which illuminates the speedometer and tachometer dials. The speedometer and tachometer needles are illuminated by LED, and the odometer and trip meter are illuminated by a fluorescent light tubes.

Gauge/Terminal Locations Index (LHD)

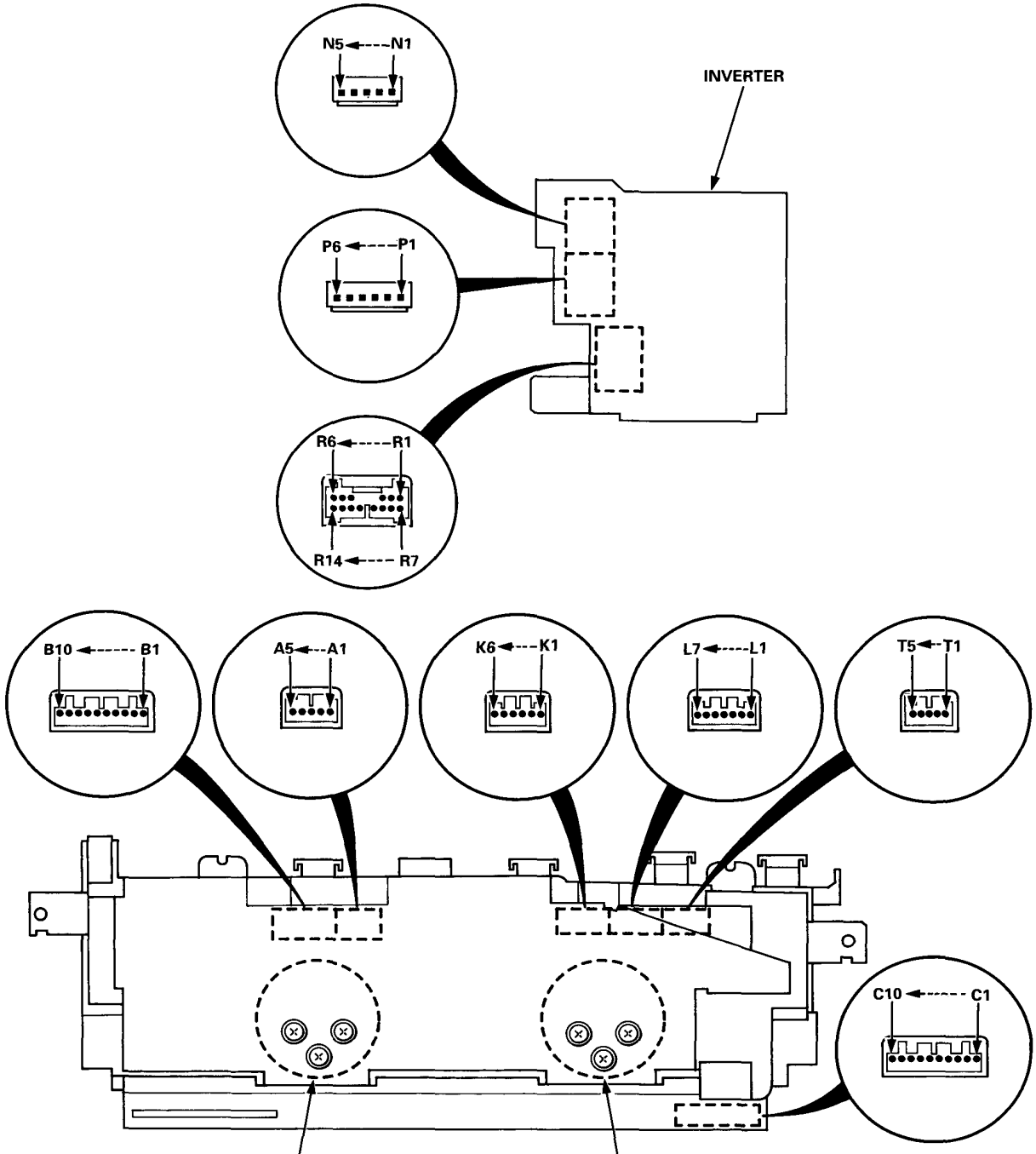

SPEEDOMETER
Indicates 60 km/h (60 mph) at 637 (1,026) min^{-1} (rpm) of the speed sensor.

TACHOMETER
Indicates 100 min^{-1} (rpm) at 200 pulses per minute of the igniter unit.

Gauge Assembly (With Luminescent Gauges)

Gauge/Terminal Locations Index (RHD)

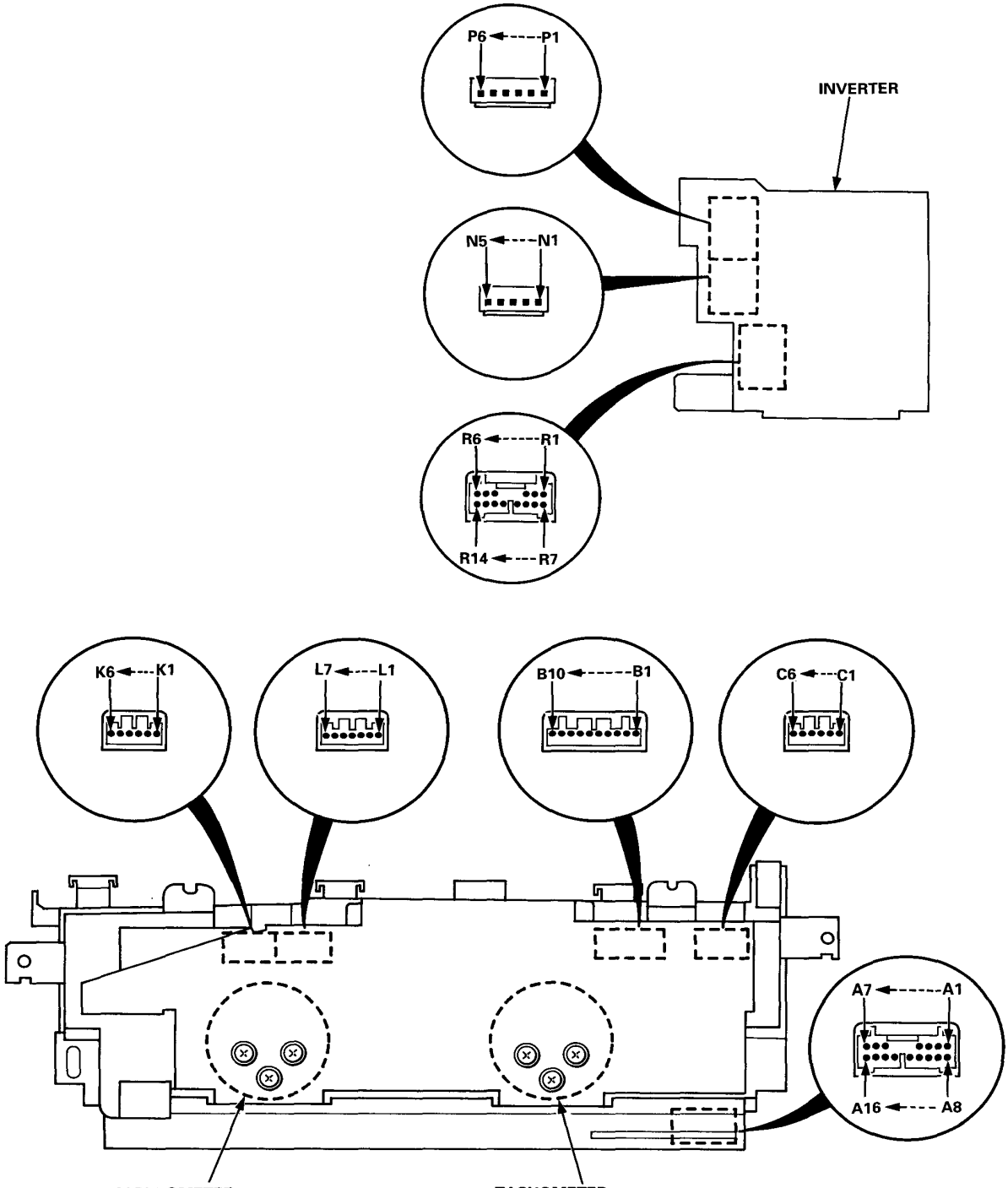

SPEEDOMETER
Indicates 60 km/h (60 mph) at 637 (1,026) min^{-1} (rpm) of the speed sensor.

TACHOMETER
Indicates 100 min^{-1} (rpm) at 200 pulses per minute of the igniter unit.

Circuit Diagram

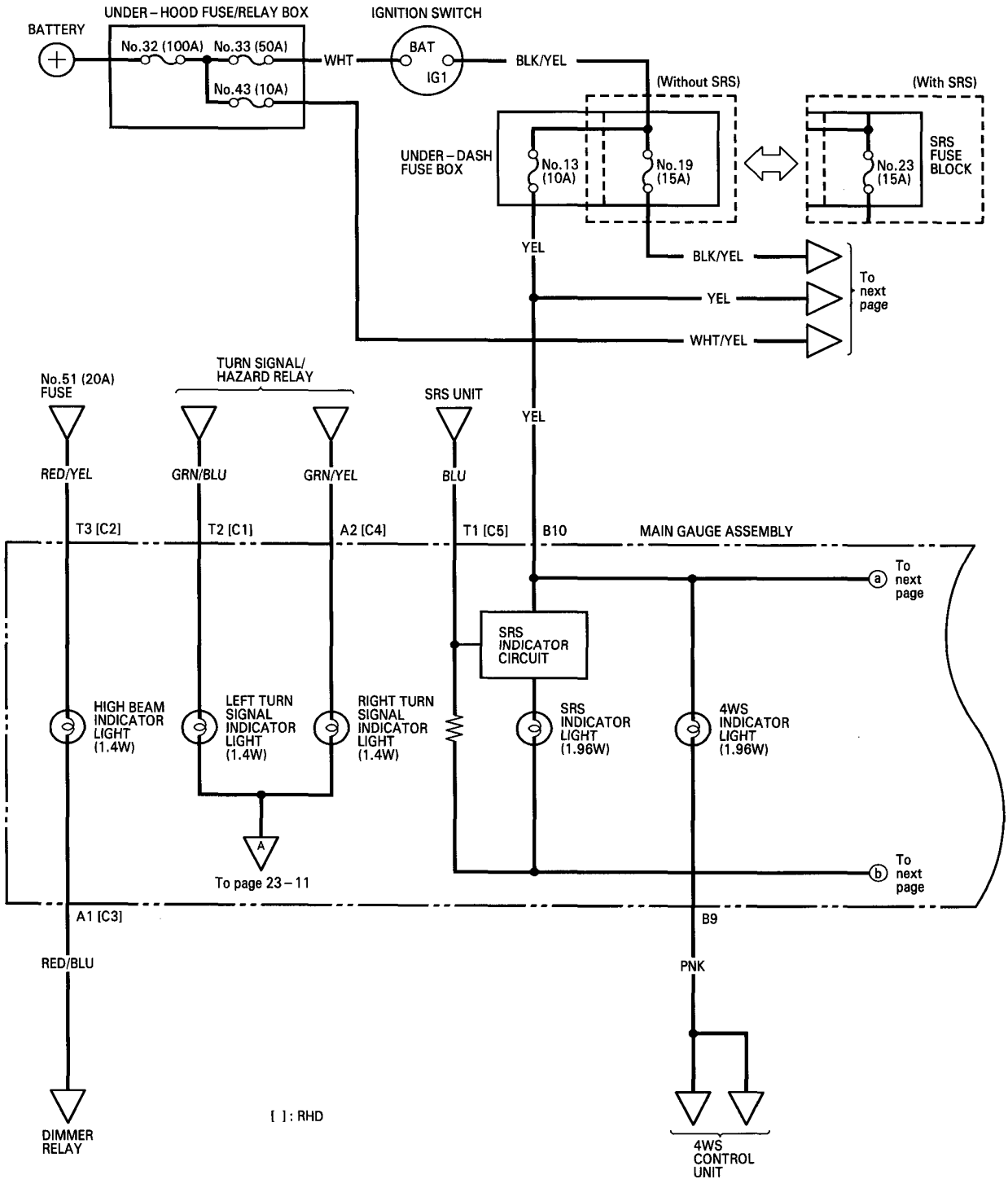

(cont'd)

Gauge Assembly (With Luminescent Gauges)

Circuit Diagram

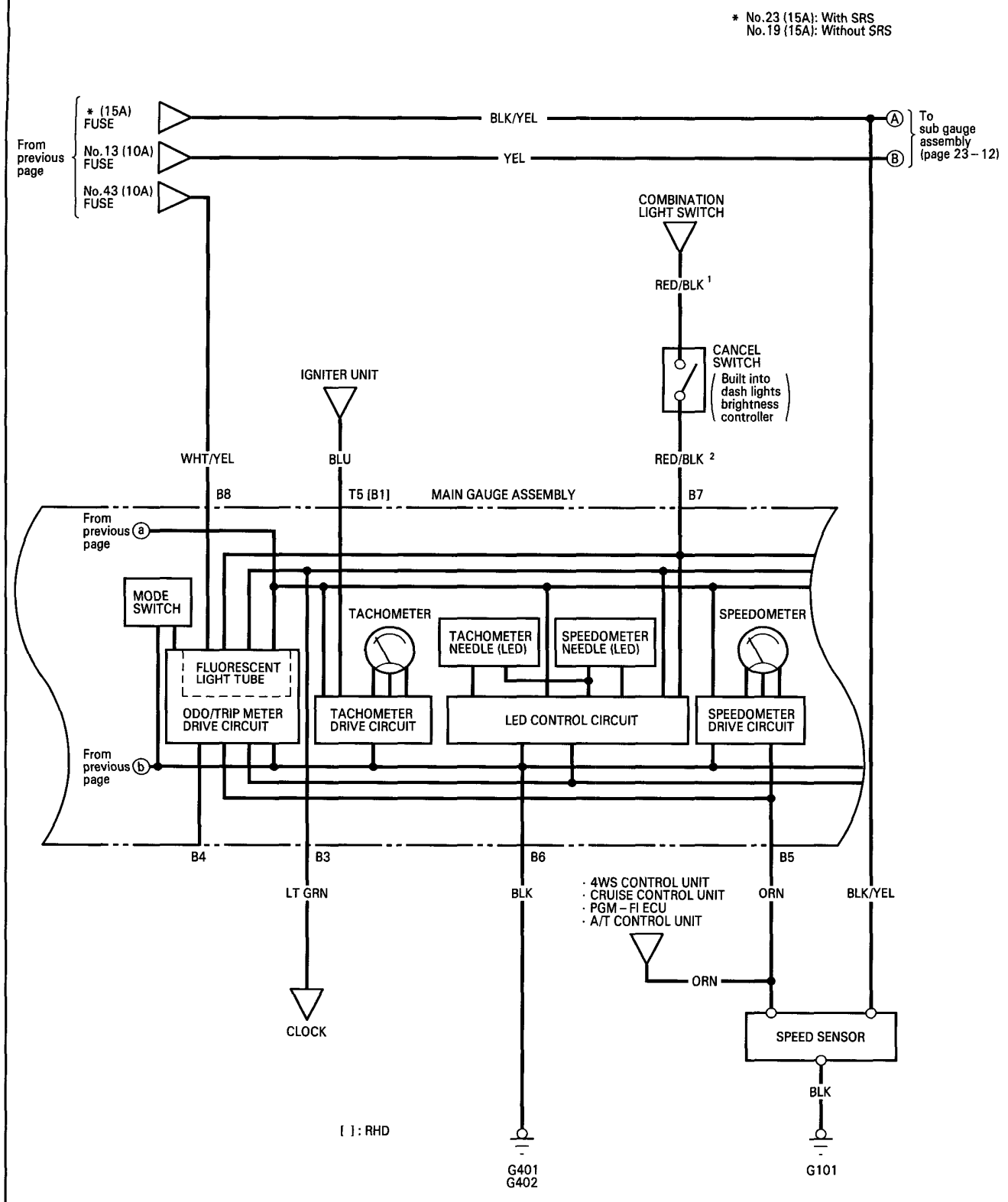

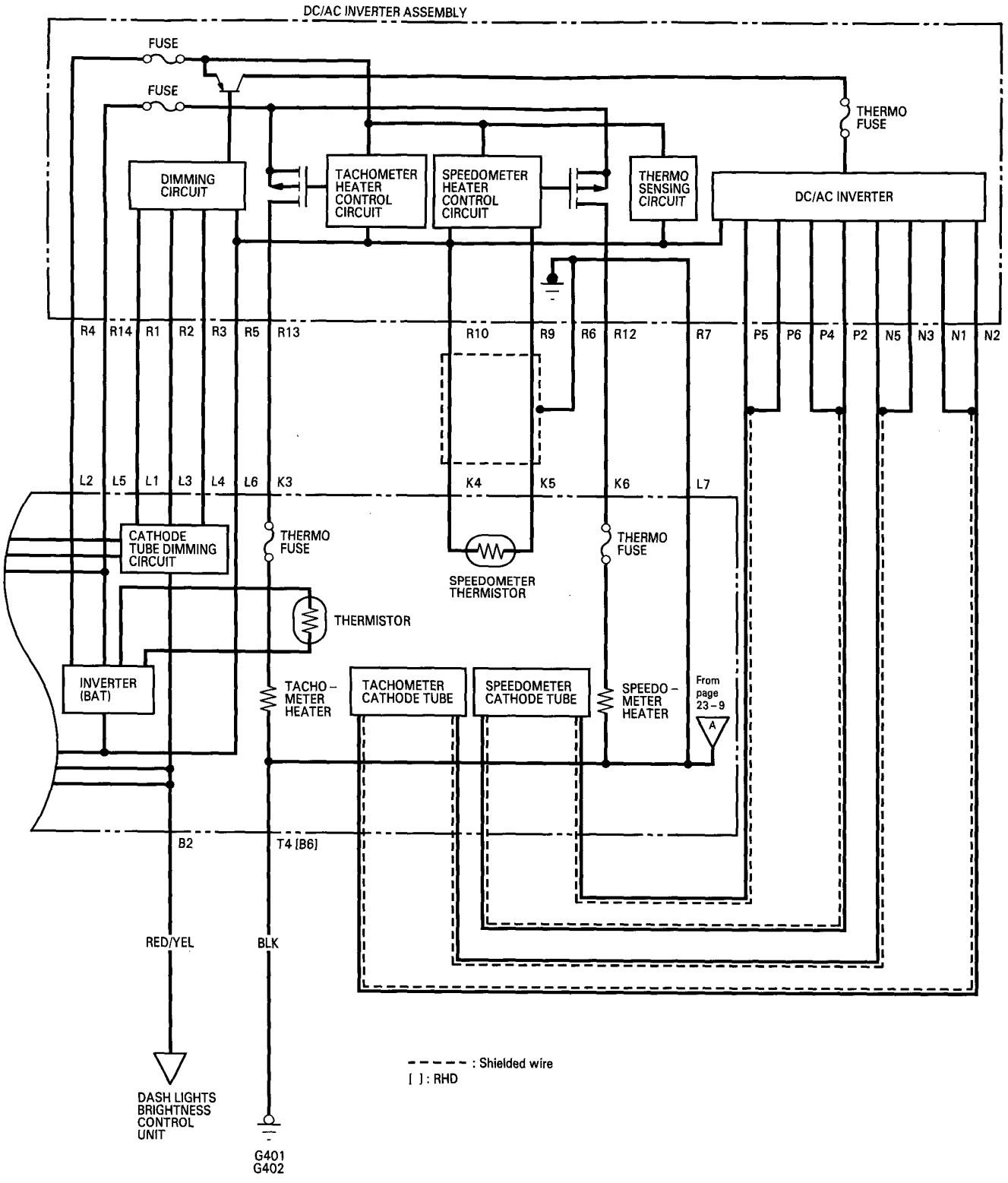
DC/AC INVERTER ASSEMBLY
FUSE
FUSE
THERMO FUSE
DIMMING CIRCUIT
TACHOMETER HEATER CONTROL CIRCUIT
SPEEDOMETER HEATER CONTROL CIRCUIT
THERMO SENSING CIRCUIT
DC/AC INVERTER
R4 R14 R1 R2 R3 R5 R13 R10 R9 R6 R12 R7 P5 P6 P4 P2 N5 N3 N1 N2
L2 L5 L1 L3 L4 L6 K3 K4 K5 K6 L7
CATHODE TUBE DIMMING CIRCUIT
THERMO FUSE
SPEEDOMETER THERMISTOR
THERMO FUSE
THERMISTOR
INVERTER (BAT)
TACHO-METER HEATER
TACHOMETER CATHODE TUBE
SPEEDOMETER CATHODE TUBE
SPEEDO-METER HEATER
From page 23-9
A
B2
T4 [B6]
RED/YEL
BLK
DASH LIGHTS BRIGHTNESS CONTROL UNIT
G401
G402
- - - - - : Shielded wire
[ ] : RHD

Gauge Assembly (With Luminescent Gauges)

Circuit Diagram

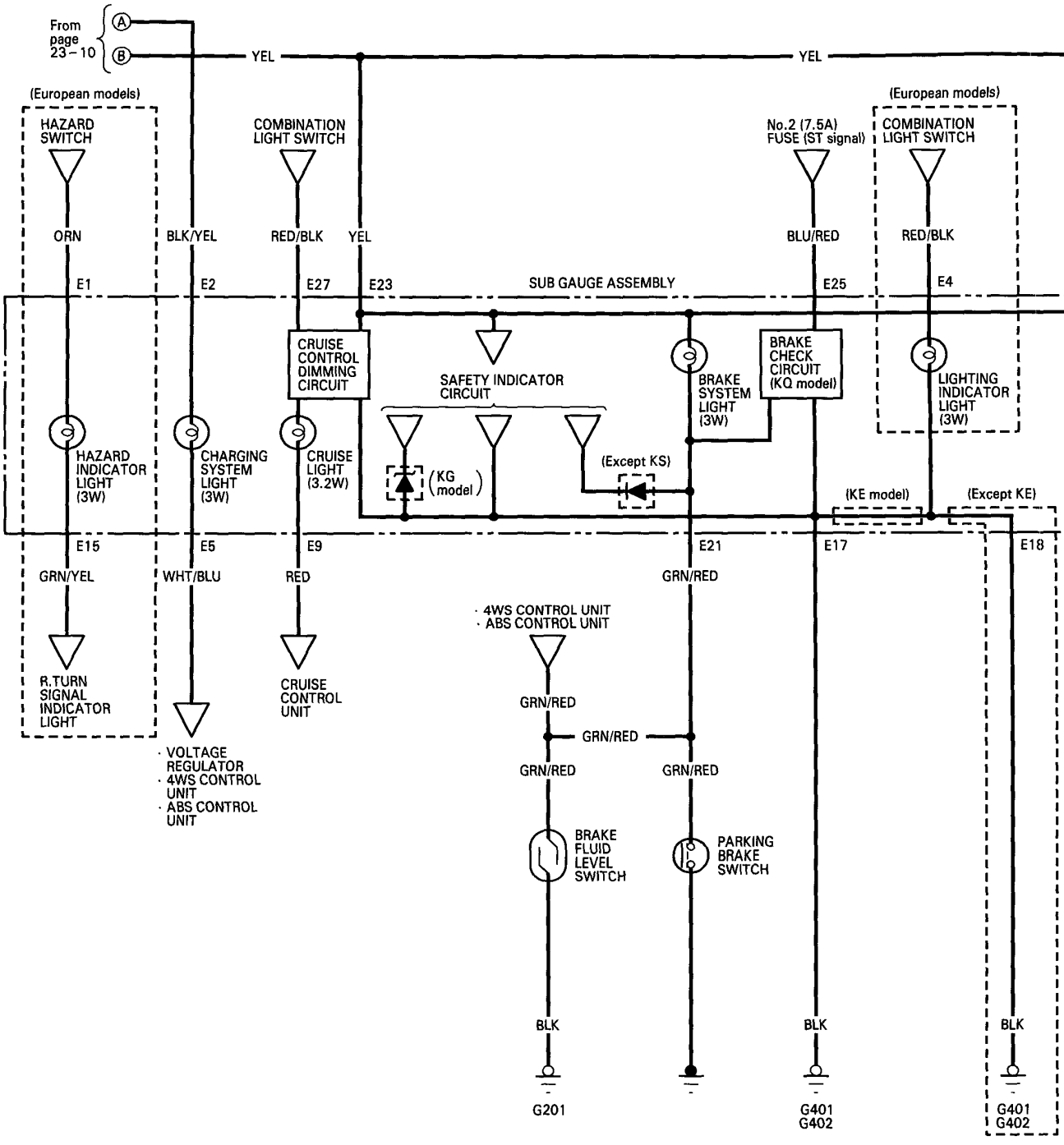

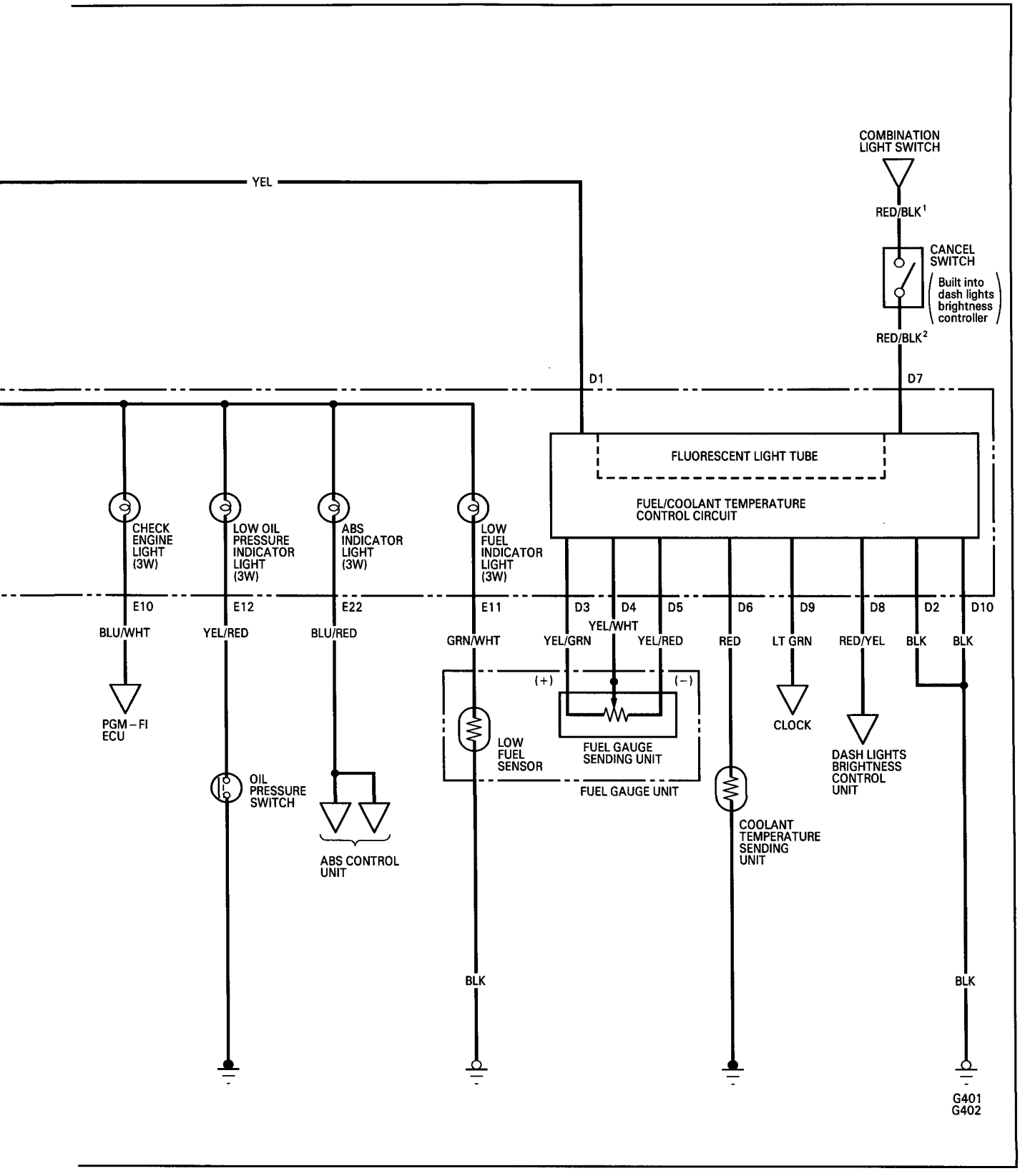
COMBINATION LIGHT SWITCH
YEL
RED/BLK1
CANCEL SWITCH
Built into dash lights brightness controller
RED/BLK2
D1
D7
FLUORESCENT LIGHT TUBE
FUEL/COOLANT TEMPERATURE CONTROL CIRCUIT
CHECK ENGINE LIGHT (3W)
LOW OIL PRESSURE INDICATOR LIGHT (3W)
ABS INDICATOR LIGHT (3W)
LOW FUEL INDICATOR LIGHT (3W)
E10
E12
E22
E11
D3
D4
D5
D6
D9
D8
D2
D10
BLU/WHT
YEL/RED
BLU/RED
GRN/WHT
YEL/GRN
YEL/WHT
YEL/RED
RED
LT GRN
RED/YEL
BLK
BLK
PGM-FI ECU
(+)
(-)
LOW FUEL SENSOR
FUEL GAUGE SENDING UNIT
FUEL GAUGE UNIT
CLOCK
DASH LIGHTS BRIGHTNESS CONTROL UNIT
OIL PRESSURE SWITCH
ABS CONTROL UNIT
COOLANT TEMPERATURE SENDING UNIT
BLK
BLK
G401
G402

Gauge Assembly (With Luminescent Gauges)

Bulb Locations

Main Gauge Assembly:
LHD:

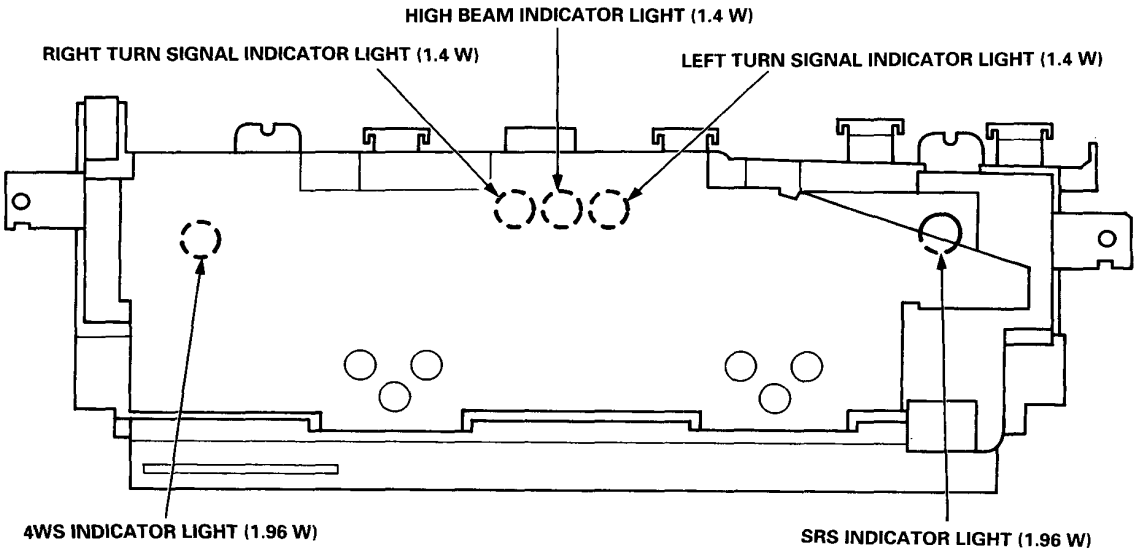

RHD:

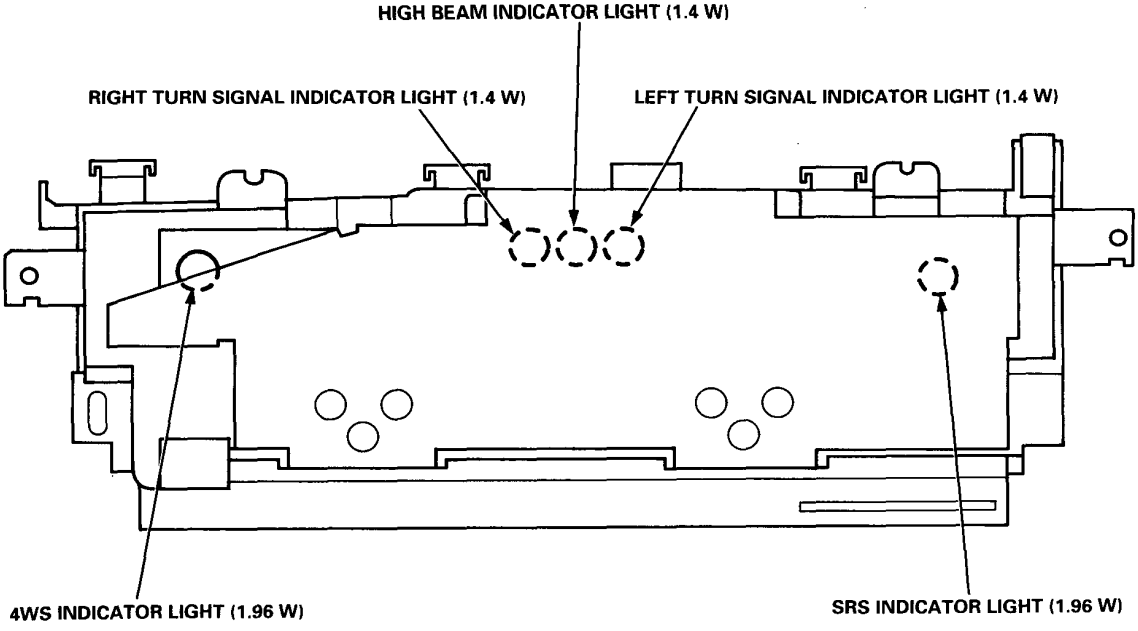

Bulb Locations (European models)

Sub Gauge Assembly:
LHD:

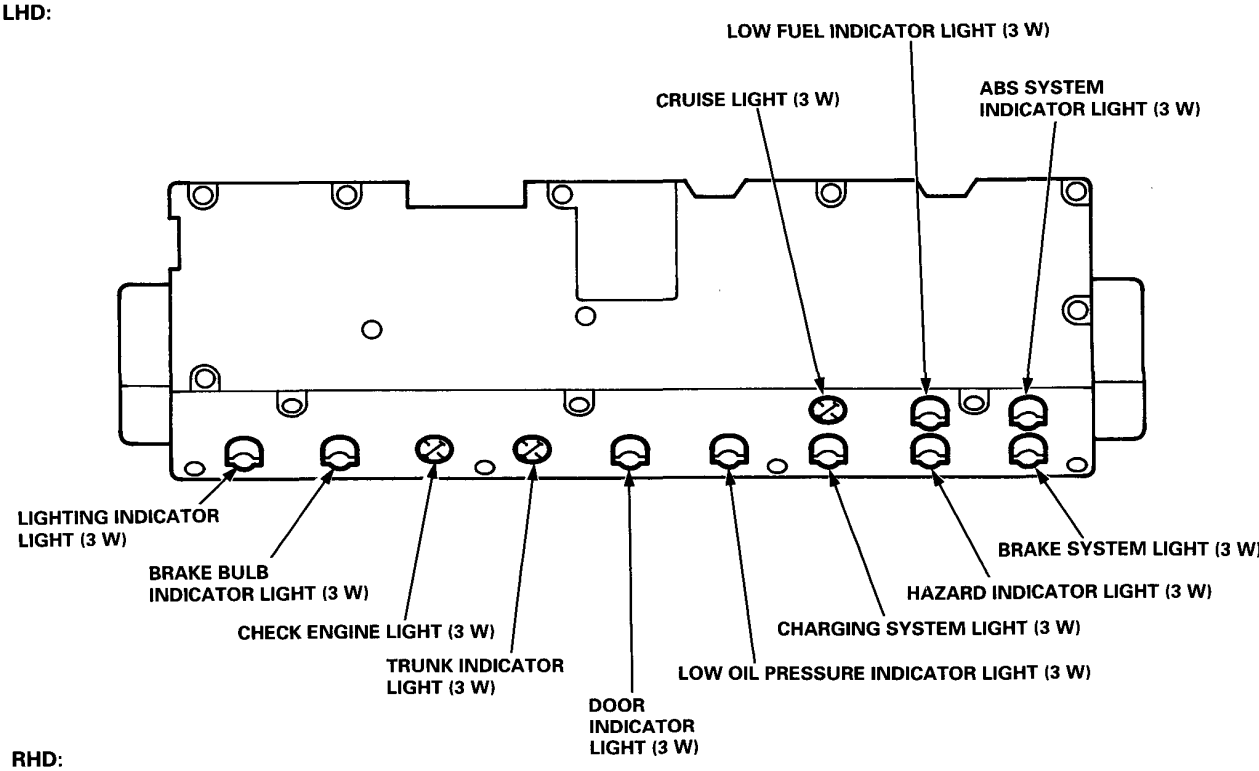

RHD:

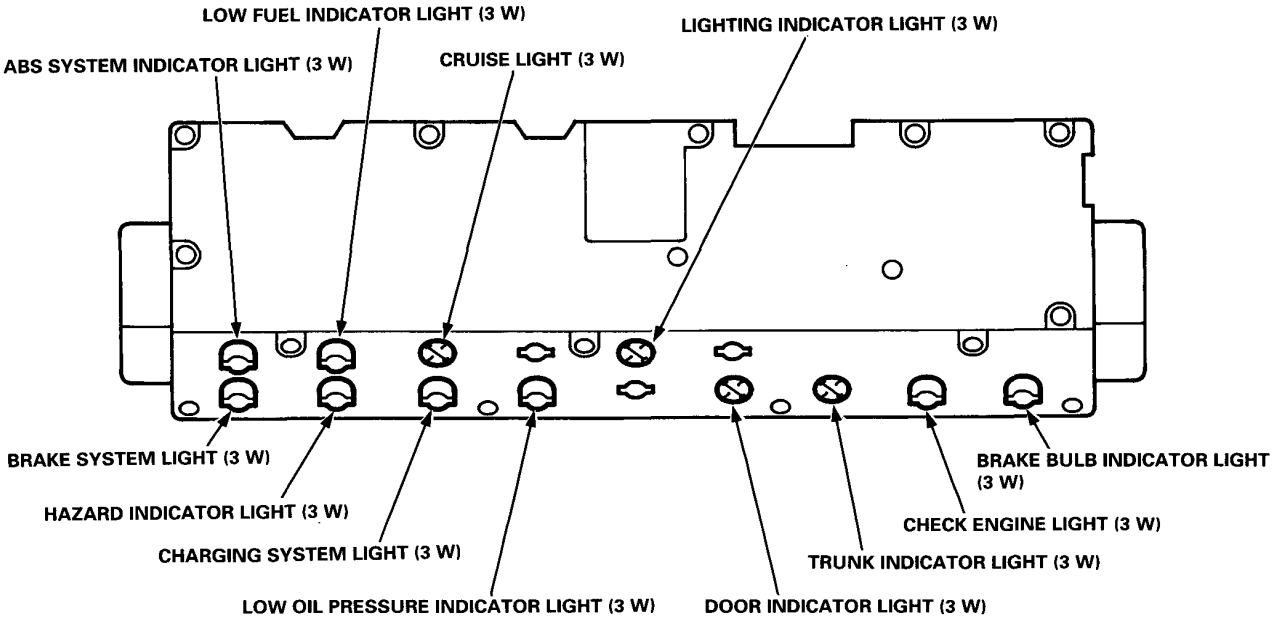

Interlock System (KQ model)

Control Unit Input Test

1. Disconnect the 8-P connector from the interlock control unit.

2. Inspect the connector and socket terminals to be sure they are all making good contact.

   - If the terminals are bent, loose, or corroded, repair them as necessary, and recheck the system.
   - If the terminals look OK, make the following input tests at the connector.
     — If a test indicates a problem, find and correct the cause, then recheck the system.
     — If all the input tests prove OK, substitute a known-good control unit and recheck the system. If the check is OK, the control unit must be faulty; replace it.

NOTE: If the shift lock solenoid clicks when the ignition switch is turned ON and you step on the brake pedal (with the shift lever in P), the shift lock system is electronically normal; if the shift lever cannot be shifted from P, test the shift lever position switch.

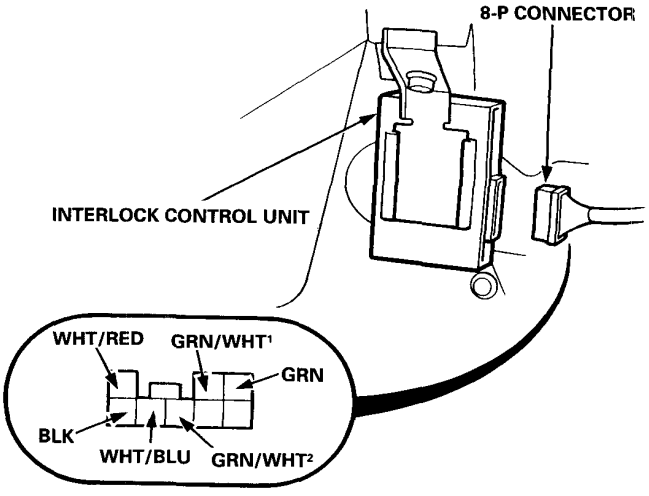

View from wire side

Shift Lock System:

No.	Wire	Test condition	Test: Desired result	Possible cause if result is not obtained
1	GRN/WHT¹	Ignition switch ON. Brake pedal pushed.	Check for voltage to ground: There should be battery voltage.	• Blown No. 41 (15 A) fuse in the under-hood fuse/relay box • Faulty PGM-FI ECU • Faulty brake switch • Faulty throttle position sensor • An open in the wire
		Ignition switch ON, brake pedal and accelerator pushed at the same time.	Check for voltage to ground: There should be less than battery voltage.	
2	GRN/WHT²	Shift lever in P.	Check for continuity to ground: There should be continuity.	• Faulty shift lever position switch • Poor ground (G401, G402) • An open in the wire
3	GRN	Ignition switch ON.	Check for voltage to ground: There should be battery voltage.	• Blown No. 13 (10 A) fuse in the under-dash fuse box • Faulty shift lock solenoid • An open in the wire

Key Interlock System:

No.	Wire	Test condition	Test: Desired result	Possible cause if result is not obtained
1	BLK	Under all conditions.	Check for continuity to ground: There should be continuity.	• Poor ground (G401, G402) • An open in the wire
2	GRN/WHT²	Shift lever in P.	Check for continuity to ground: There should be continuity.	• Faulty shift lever position switch • Poor ground (G401, G402) • An open in the wire
3	WHT/RED	Ignition switch turned to ACC (I) and the key pushed all the way in.	Check for voltage to ground: There should be battery voltage.	• Blown No. 46 (10 A) fuse in the under-hood fuse/relay box • Faulty steering lock assembly (key interlock solenoid) • An open in the wire
	WHT/BLU			

Ceiling/Spot Lights (KQ and KY models)

Test/Replacement

1. Turn the ceiling and spot light switches off.
2. Remove the lens.
3. Remove the two screws, and disconnect the 4-P connector from the housing.

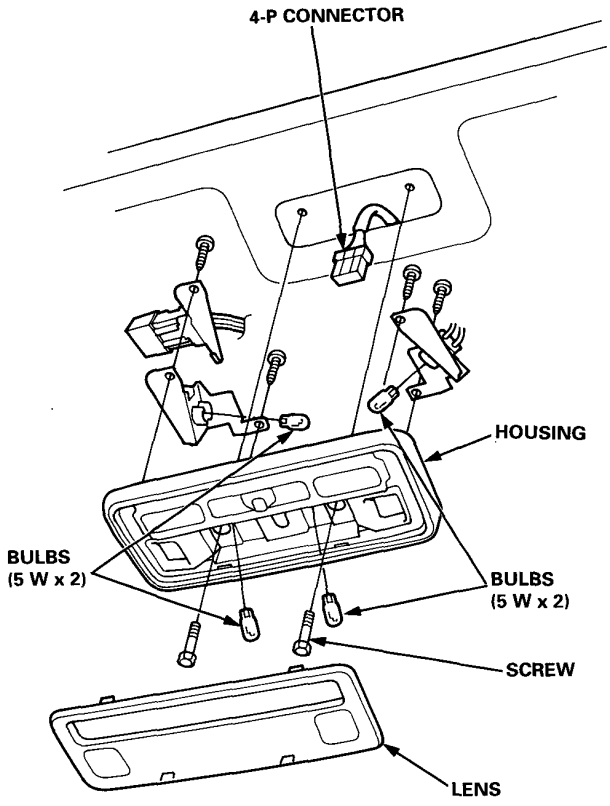

4. Check for continuity between the terminals in each switch position according to the table.

Position \ Terminal			A		B	C	D
CEILING LIGHTS	OFF						
	DOOR		○	⊖	○		
	ON		○	⊖		○	
SPOT LIGHTS	SW1	ON	○	⊖		○	
		OFF					
	SW2	ON	○	⊖		○	
		OFF					

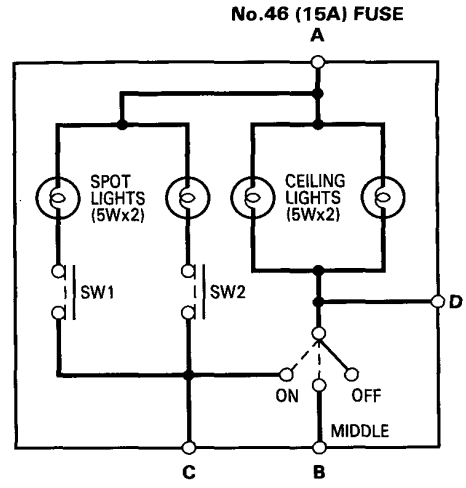

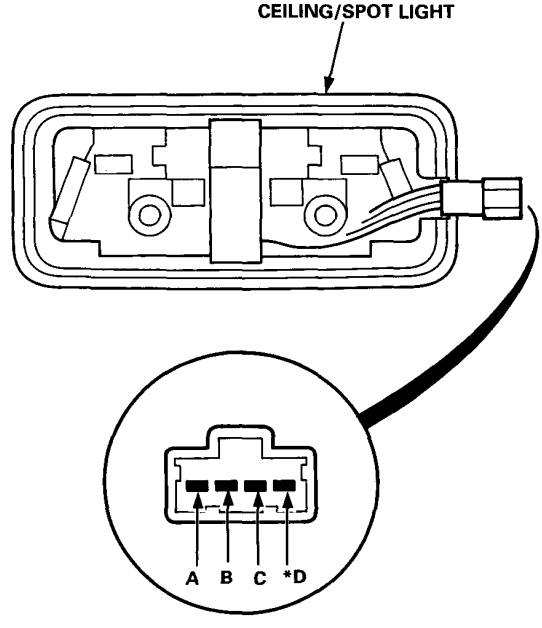

*: Not used

Brake/High Mount Brake Lights

Circuit Diagram

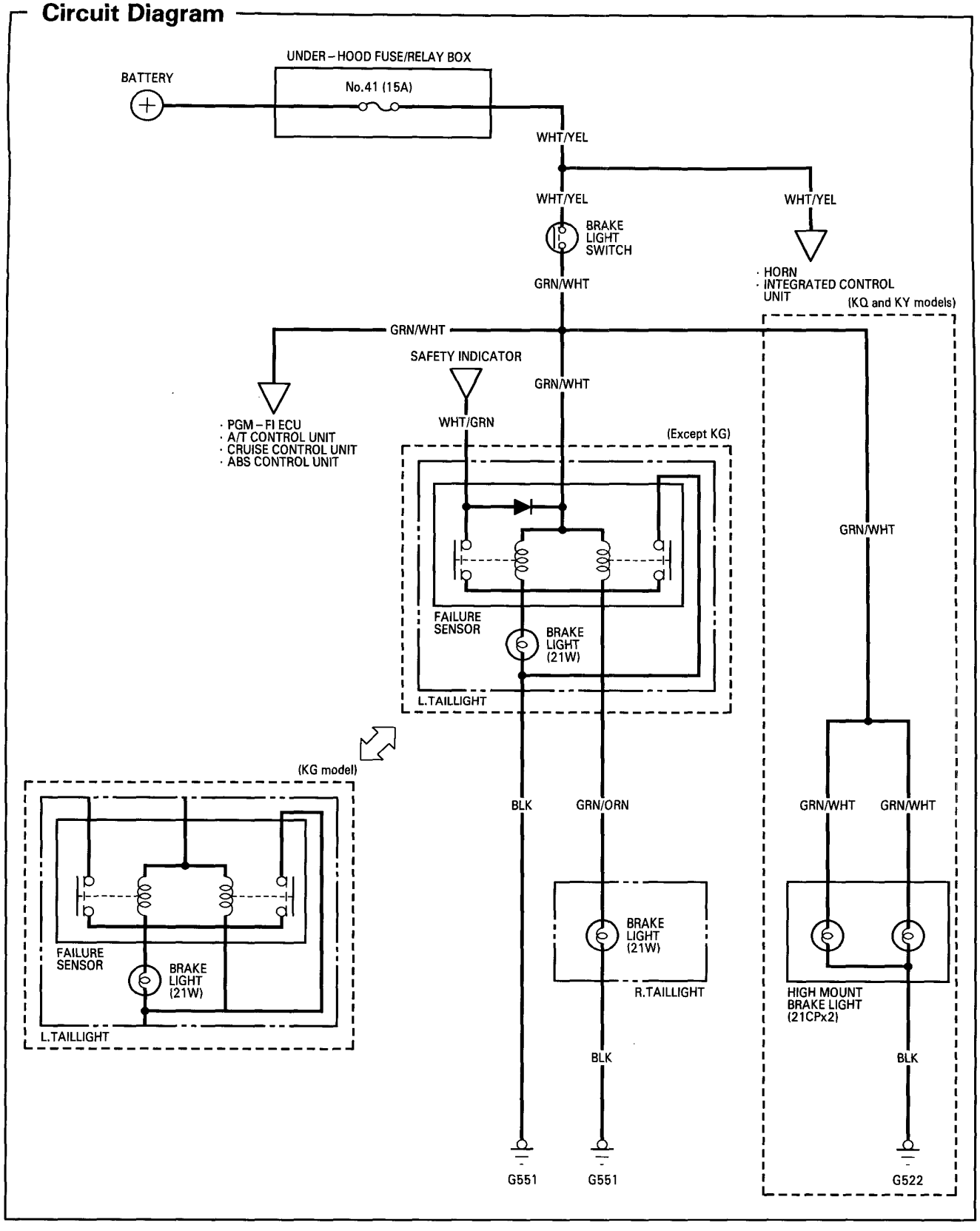

Brake Light Failure Sensor Test

1. First make sure the brake lights come on when the brake pedal is pressed.

   - If all the brake lights come on, go to step 2.
   - If one of the brake lights does not come on, check whether the bulb is blown. If the bulb is OK, go to step 2.
   - If none of the brake lights come on, check the brake light circuit.

2. Open the trunk lid and the left taillight access panel, then remove the bulb socket housing.

3 Watch the BRAKE LAMP light in the safety indicator when the ignition switch is turned from OFF to ON with the WHT/GRN terminal of the 6-P connector grounded.

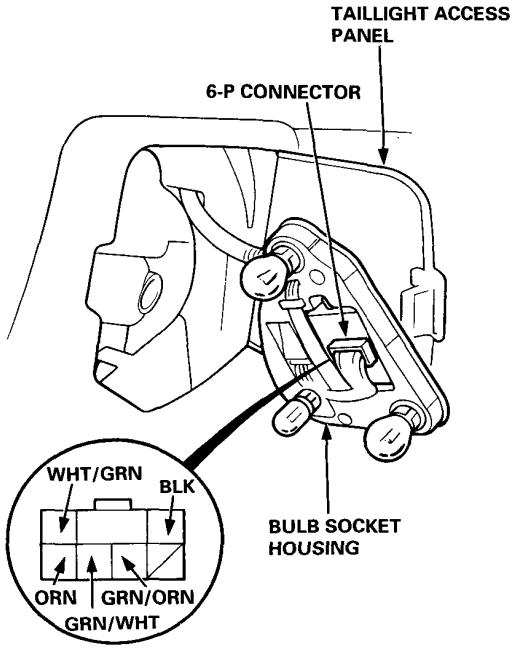

View from wire side

   - If the BRAKE LAMP light comes on and stays on, check for an open in the WHT/GRN wire between the safety indicator and the failure sensor.
   - If the BRAKE LAMP light does not stay on, go to step 3.

4. Watch the BRAKE LAMP light when the ignition switch is turned from OFF to ON with the GRN/ORN terminal of the 6-P connector grounded and the brake pedal depressed.

   - If the BRAKE LAMP light comes on and stays on, check for:
     — poor ground (G551).
     — an open in the wire.

Except KG:

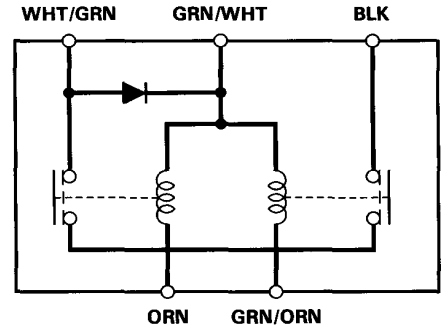

KG model:

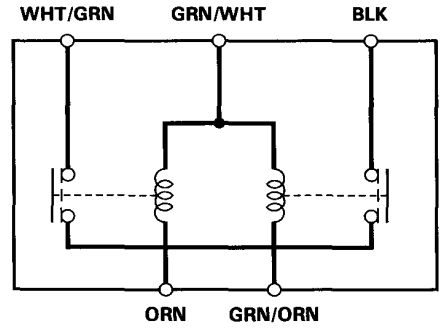

Turn Signal/Hazard Flasher System

Circuit Diagram

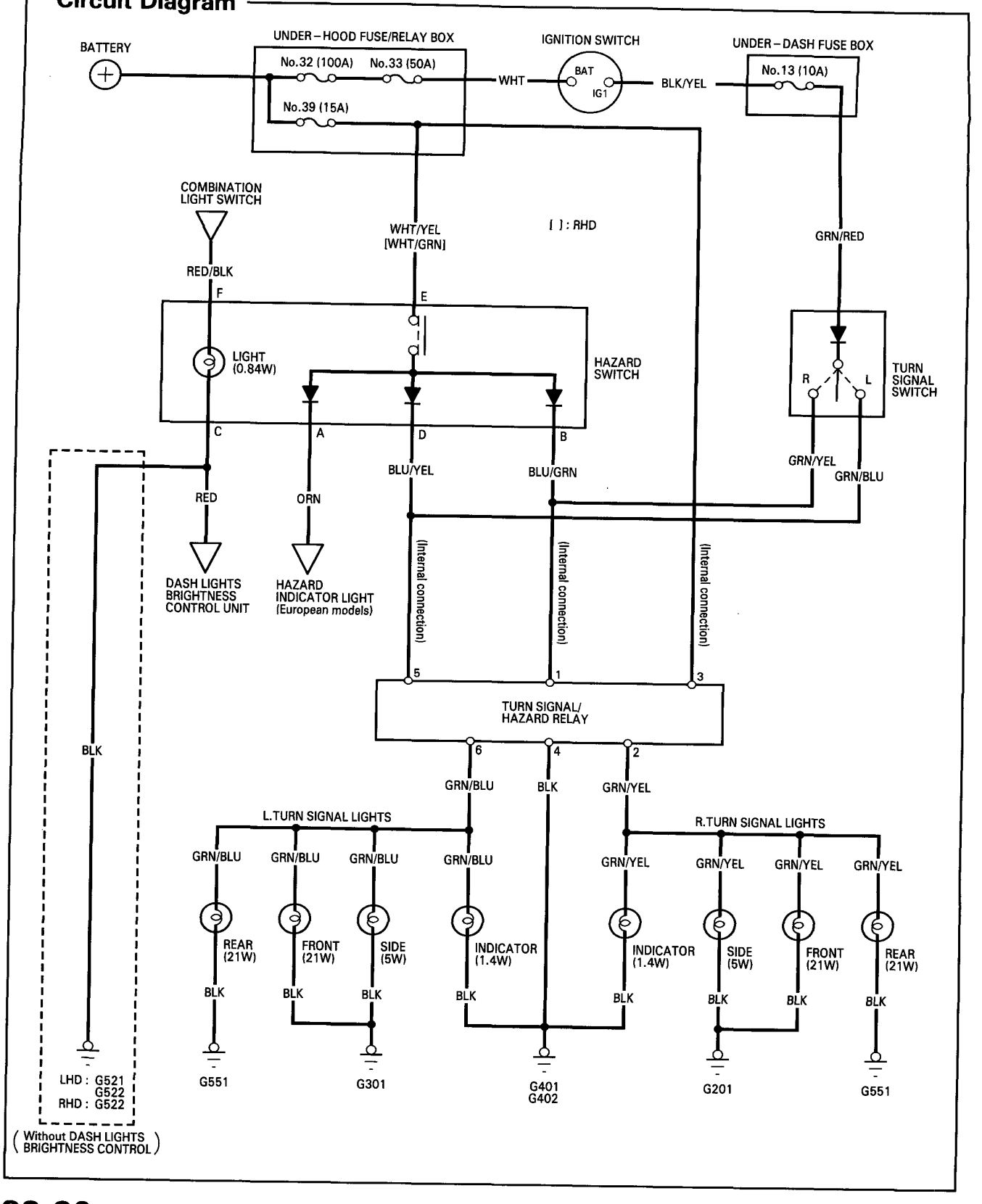

Hazard Switch Test/Replacement

1. Carefully remove the hazard switch from the center console.

2. Disconnect the 6-P connector from the switch.

   NOTE: RHD type is shown, LHD type is symmetrical.

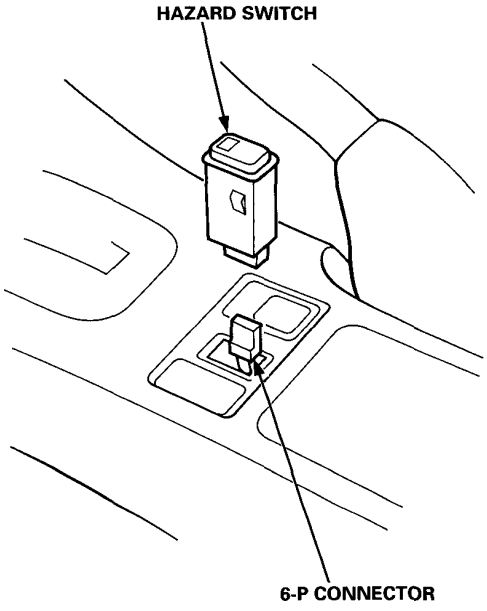

3. Check for continuity between the terminals in each switch position according to the table.

Terminal / Position	*A	B	C	D		E	F
ON	○	○		○	◀ ◀ ◀	○	
OFF			○		⊘		○

* : European models

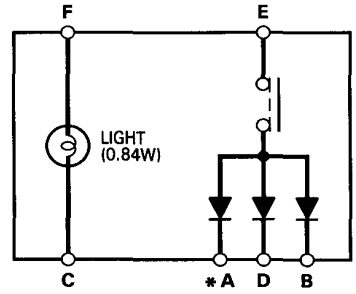

*: European models

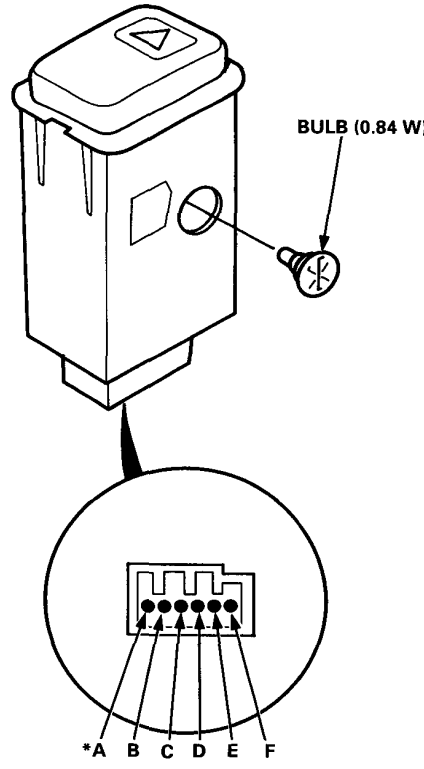

*: European models

Dash Lights Brightness Control (With Luminescent Gauges)

Component Location Index

CAUTION:

- All SRS wire harnesses are covered with yellow insulation.
- Replace the entire affected SRS harness assembly if it has an open circuit or damaged wiring.
- Before disconnecting the SRS wire harness, turn the ignition switch OFF, disconnect the battery negative cable, then disconnect the positive cable, and wait at least three minutes.
- Whenever the ignition switch is ON (II), or has been turned OFF for less than three minutes, be careful not to bump the SRS unit; the airbags could accidentally deploy and cause damage of injuries.
- Before you disconnect any part of an SRS wire harness, connect the short connectors (RED) to the airbags (SRS type III).
- For additional precautions, refer to page 23-34 in the SRS sub-section.

SRS Type II:

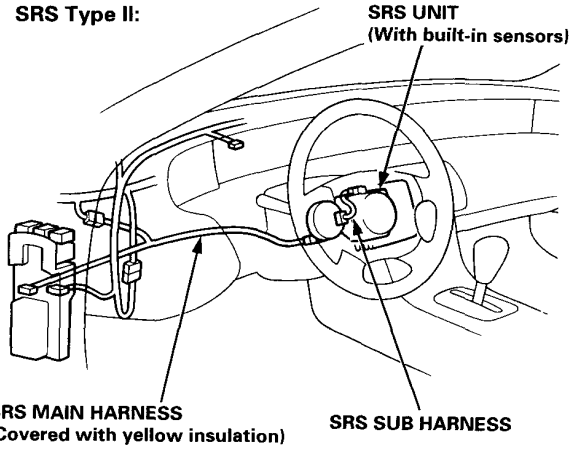

SRS Type III:

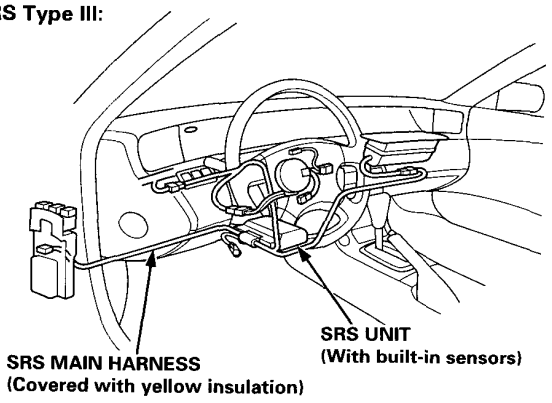

NOTE: LHD type is shown, RHD type is symmetrical.

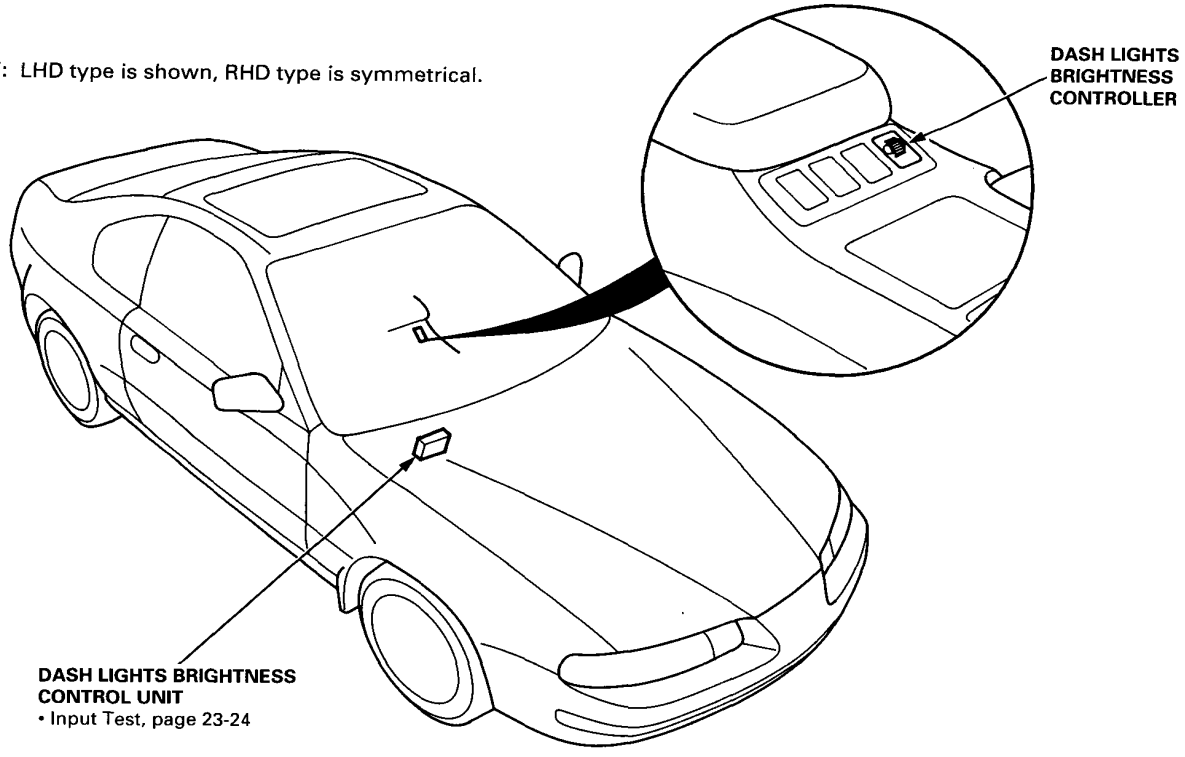

Circuit Diagram

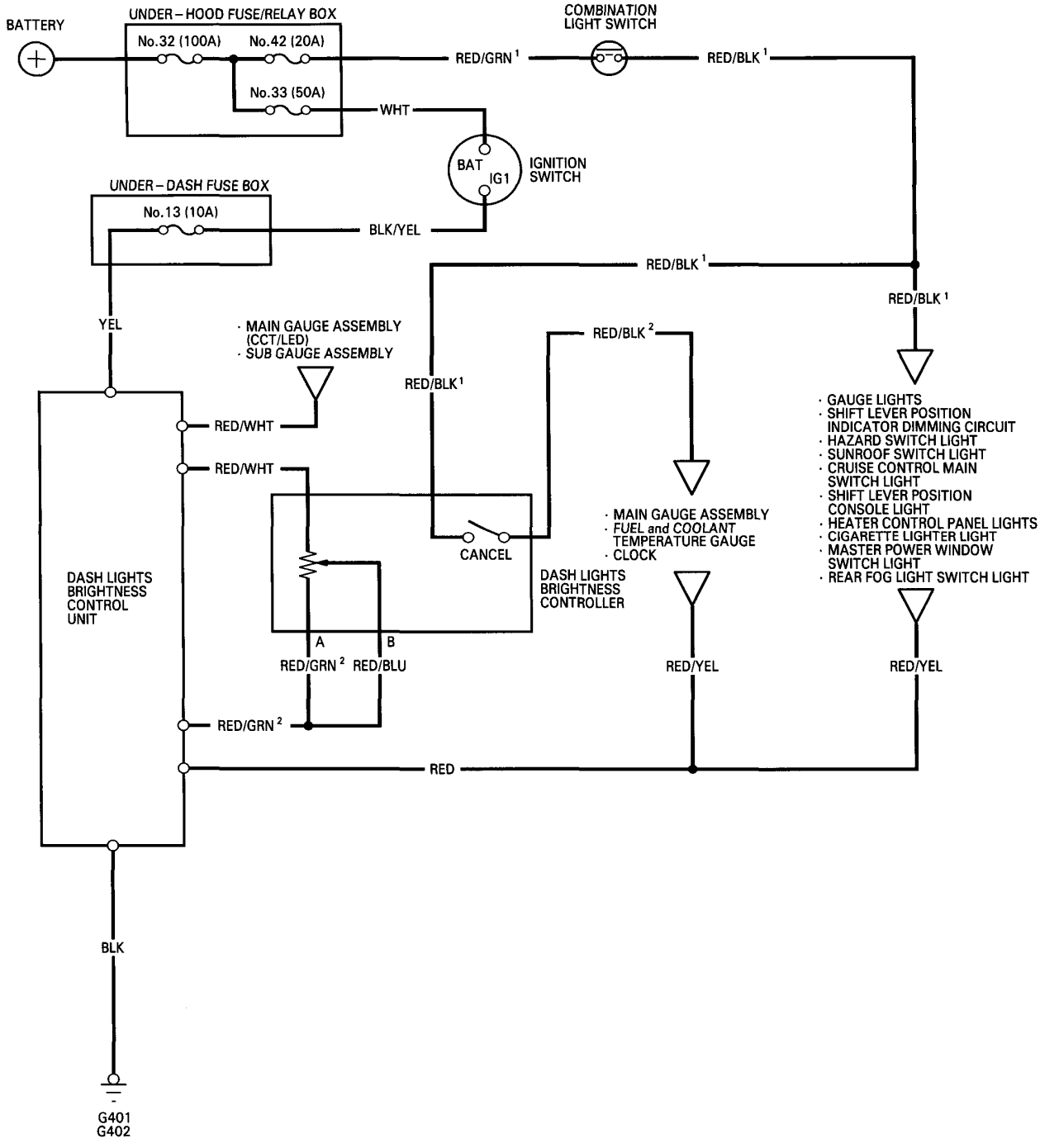

Dash Light Brightness Control (With Luminescent Gauges)

Control Unit Input Test

1. Remove the sub gauge assembly.
2. Disconnect the 6-P connector from the control unit.
3. Inspect the connector and socket terminals to be sure they are all making good contact.
   - If the terminals are bent, loose or corroded, repair them as necessary, and recheck the system.
   - If the terminals look OK, make the following input tests at the connector.
     — If a test indicates a problem, find and correct the cause, then recheck the system.
     — If all input tests prove OK, the control unit must be faulty; replace it.

NOTE: RHD type is shown, LHD type is similar.

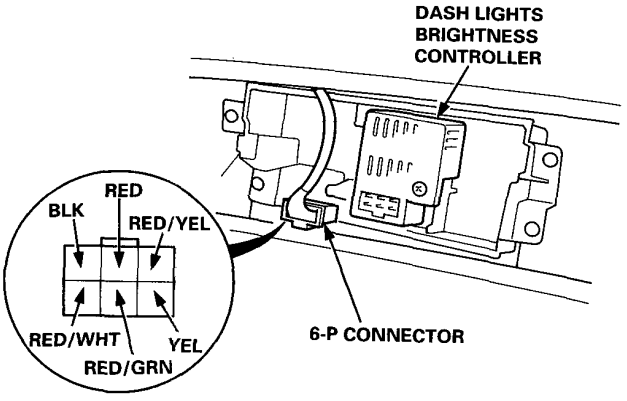

View from wire side

No.	Wire	Test condition	Test: Desired result	Possible cause if result is not obtained
1	BLK	Under all conditions	Check for continuity to ground: There should be continuity.	• Poor ground (G401, G402) • An open in the wire
2	YEL	Ignition switch ON	Check for voltage to ground: There should be battery voltage.	• Blown No. 13 (10 A) fuse in the under-dash fuse box • An open in the wire
3	RED	Combination light switch ON	Attach to ground: Dash lights should come on full bright.	• Faulty combination light switch • An open in the wire
4	RED/YEL	Ignition switch ON	Attach to ground: Brightness-controlled dash lights should come on full bright.	• Faulty combination meter • An open in the wire
5	RED/GRN² and RED/WHT	Adjusting dial rotated	Check for resistance between the RED/GRN² and RED/WHT terminals: It should vary from 0-about 10 kΩ as the dial is rotated.	• Faulty dash lights brightness controller • An open in the wire

Power Windows

Circuit Diagram

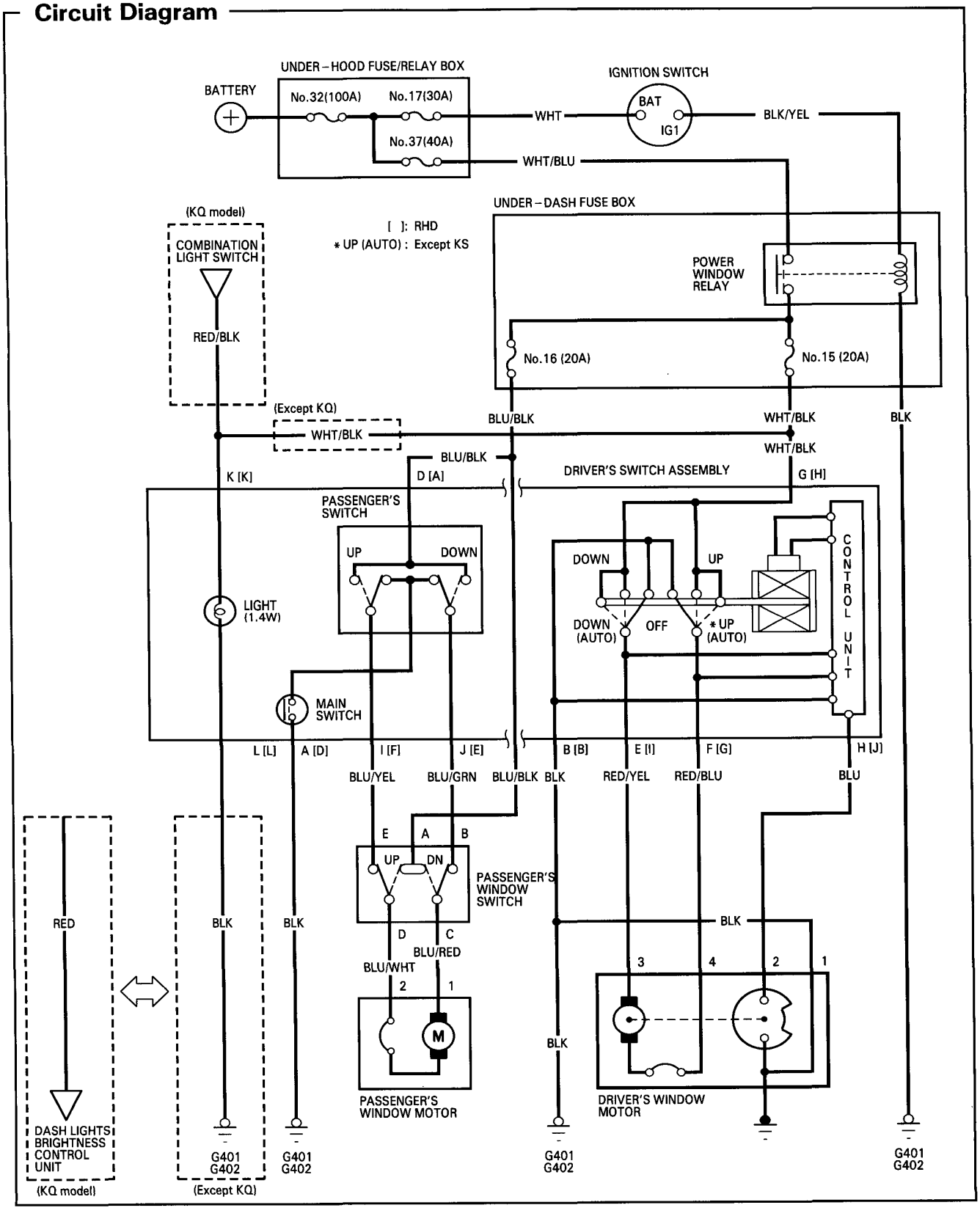

Driver's Switch Assembly Removal

1. Remove the mounting screw and pry the driver's door handle panel out of the door panel.

2. Disconnect the 10-P, 3-P and 2-P connectors from it.

   NOTE: RHD type is shown, LHD type is symmetrical.

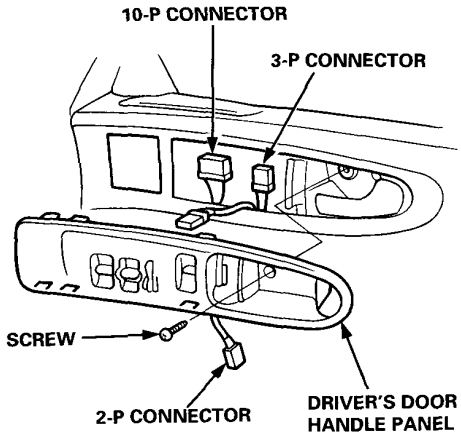

3. Remove the driver's switch assembly from the door handle panel by removing the four mounting screws.

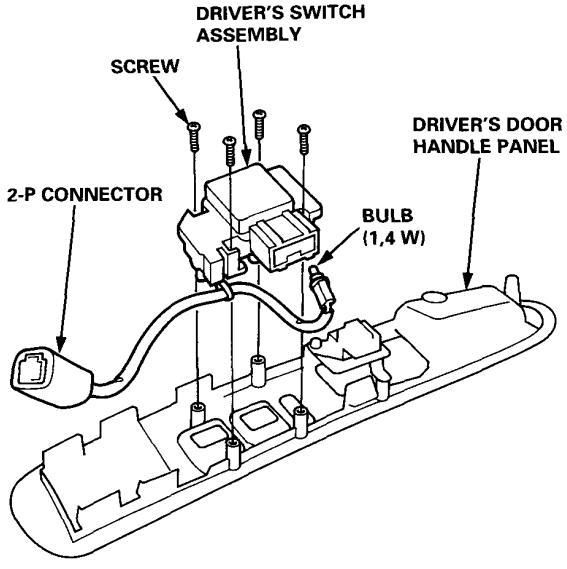

Driver's Switch Assembly Test

1. Remove the driver's door handle panel.

2. Check for continuity between the terminals in each switch position according to the table.

   NOTE: RHD type is shown, LHD type is symmetrical.

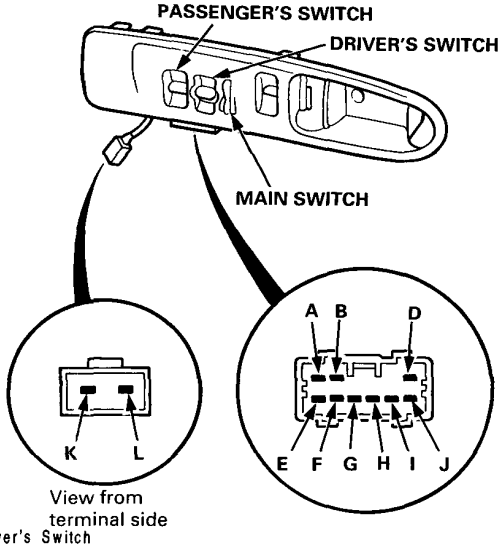

Driver's Switch

Position \ Terminal	B (B)	E (I)	F (G)	G (H)
OFF	○	○	○	
UP			○	○
DOWN		○		○
* UP(AUTO)			○	○
DOWN(AUTO)		○		○

* UP(AUTO) : Except KS
( ) : RHD

Passenger's Switch

Position	Main switch \ Terminal	A (D)	D (A)	I (F)	J (E)
OFF	ON	○		○	○
	OFF			○	○
UP	ON		○	○	
	OFF		○	○	
DOWN	ON		○		○
	OFF		○		○

( ) : RHD

3. Check for continuity between terminals K and L.

   - If there is no continuity, check the bulb.

Headlight Adjuster (KG and KS models)

Headlight Adjuster Switch Removal

1. Carefully pry the switch out of the center console.
2. Disconnect the 5-P connector from the switch.

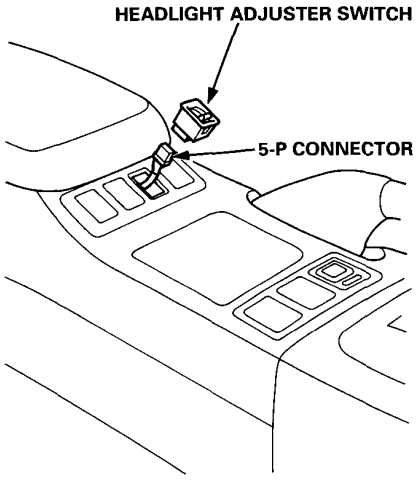

Power Mirrors

Power Mirror Switch Removal

1. Carefully pry the switch out of the center console.
2. Disconnect the 10-P connector from the switch.

NOTE: RHD type is shown, LHD type is symmetrical.

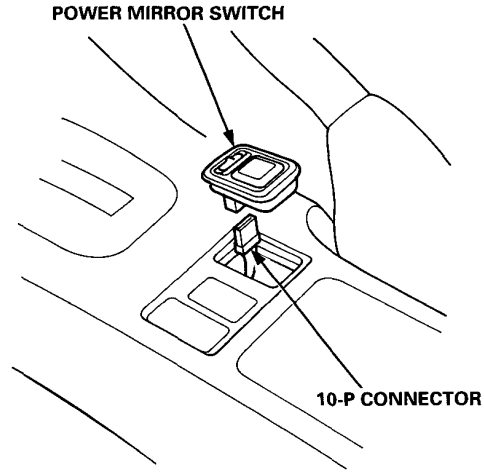

Seat Heaters (KS model)

Seat Heater Switch Removal

1. Carefully pry the switch out of the center console.
2. Disconnect the 6-P connector from the switch.

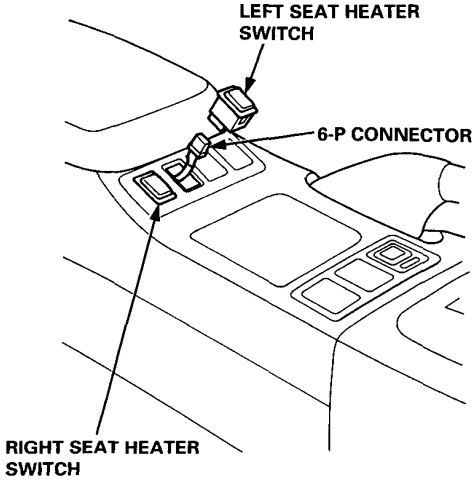

Wipers/Washers (KG and KS models)

Headlight Washer Switch Removal

1. Carefully pry the switch out of the center console.
2. Disconnect the 6-P connector from the switch.

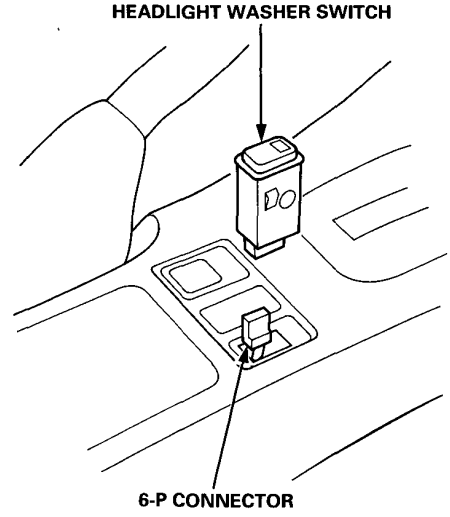

Supplemental Restraint System (SRS)–Type III

Component/Wiring Location Index 23-30
Description 23-32
Circuit Diagram 23-33
Precautions/Procedures
- General Precautions 23-34
- Airbag Handling and Storage 23-34
- SRS Unit Precautions 23-35
- Inspection After Deployment 23-35
- Wiring Precautions 23-36
- Steering-related Precautions 23-37
- Connecting the Short Connectors ... 23-38

Troubleshooting
- Self-diagnostic Procedures 23-39
- Diagnostic Trouble Code (DTC) Chart 23-42
- SRS Indicator Light Wire Connections 23-43
- Flowcharts 23-44

Airbag Assembly
- Replacement 23-68
- Disposal 23-72

Cable Reel
- Replacement 23-74

SRS Unit
- Replacement 23-78

Component/Wiring Location Index

(LHD)

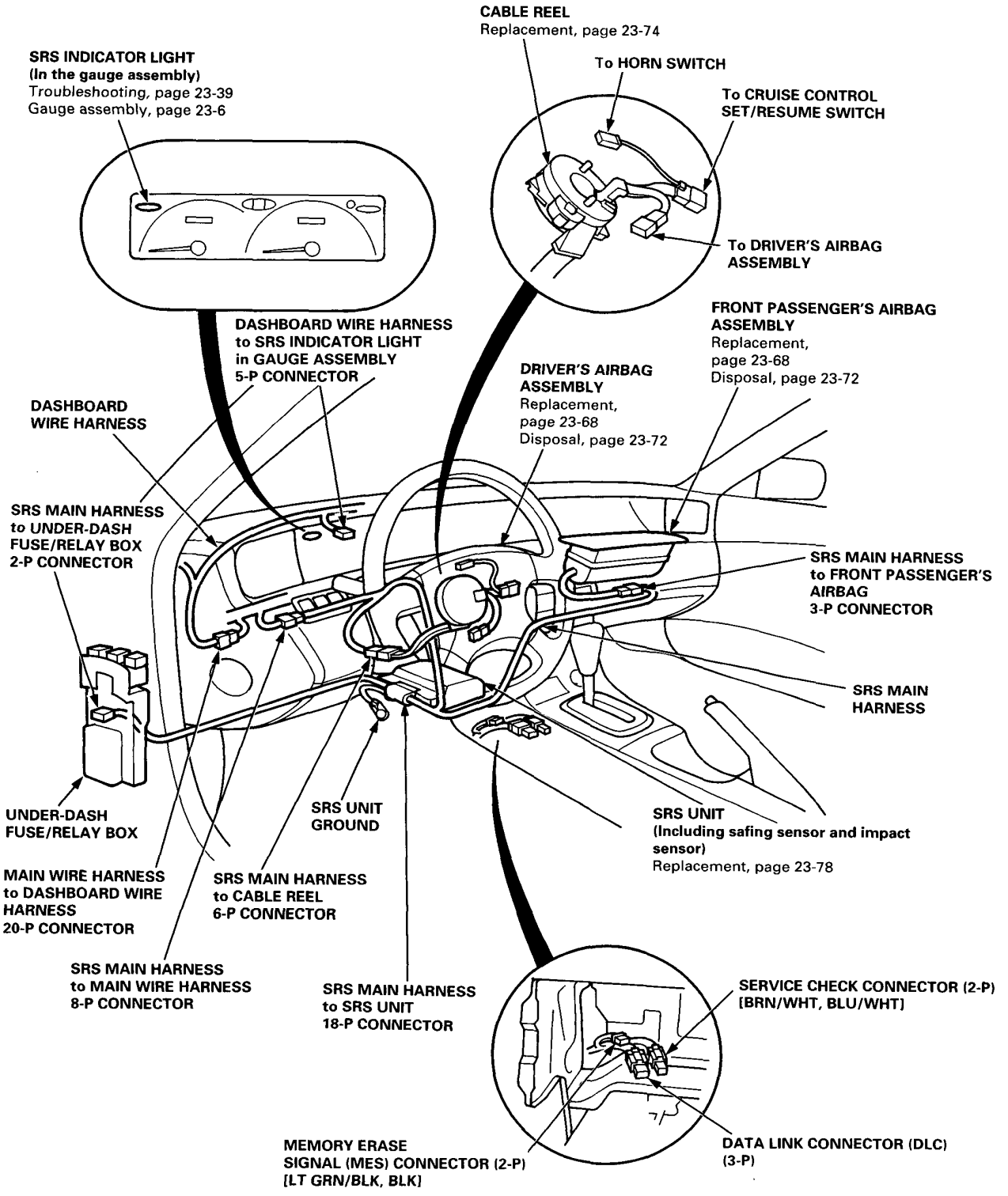

(RHD)

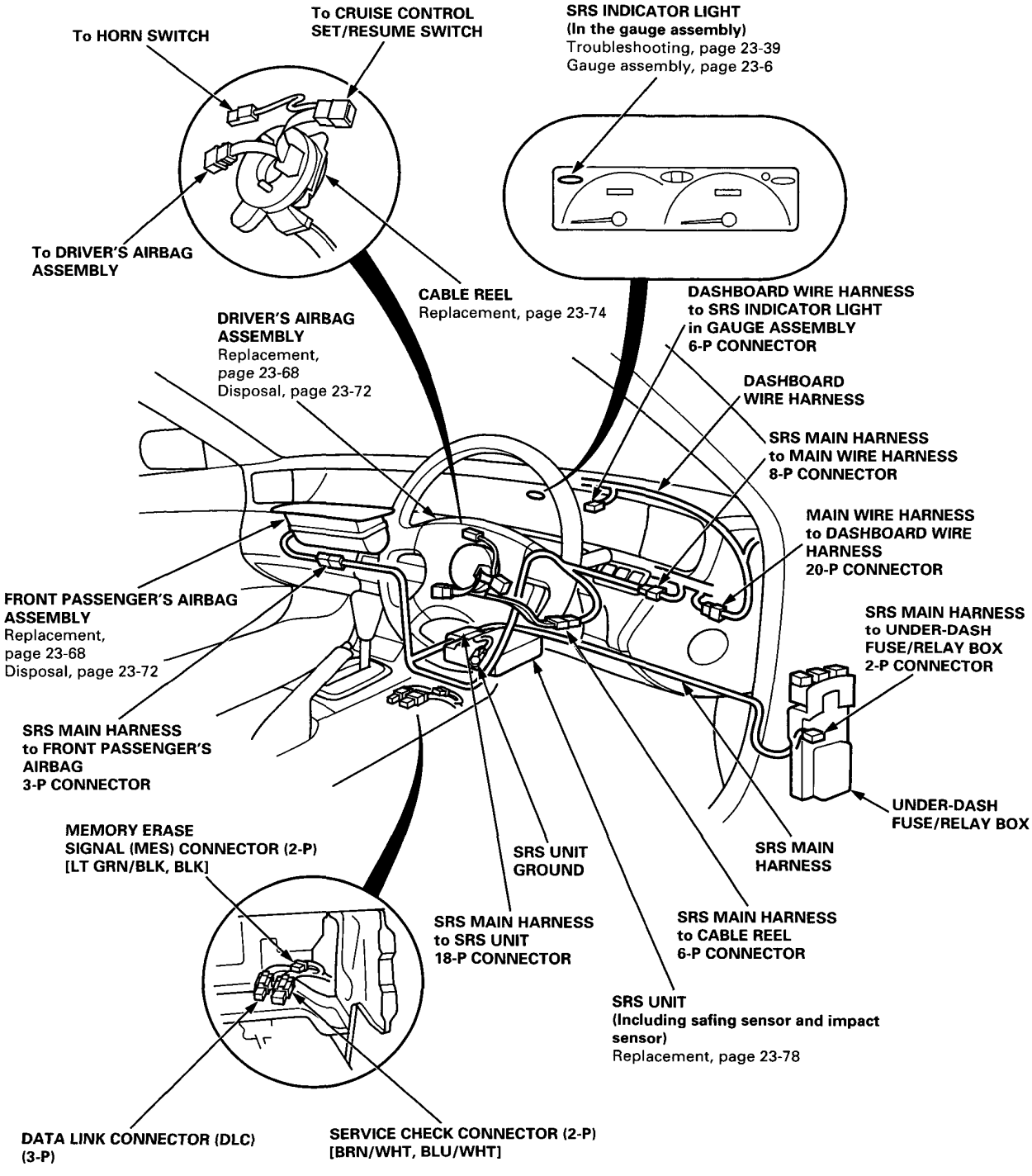
To HORN SWITCH
To CRUISE CONTROL SET/RESUME SWITCH
SRS INDICATOR LIGHT
(In the gauge assembly)
Troubleshooting, page 23-39
Gauge assembly, page 23-6
To DRIVER'S AIRBAG ASSEMBLY
CABLE REEL
Replacement, page 23-74
DRIVER'S AIRBAG ASSEMBLY
Replacement, page 23-68
Disposal, page 23-72
DASHBOARD WIRE HARNESS to SRS INDICATOR LIGHT in GAUGE ASSEMBLY 6-P CONNECTOR
DASHBOARD WIRE HARNESS
SRS MAIN HARNESS to MAIN WIRE HARNESS 8-P CONNECTOR
MAIN WIRE HARNESS to DASHBOARD WIRE HARNESS 20-P CONNECTOR
FRONT PASSENGER'S AIRBAG ASSEMBLY
Replacement, page 23-68
Disposal, page 23-72
SRS MAIN HARNESS to UNDER-DASH FUSE/RELAY BOX 2-P CONNECTOR
SRS MAIN HARNESS to FRONT PASSENGER'S AIRBAG 3-P CONNECTOR
UNDER-DASH FUSE/RELAY BOX
MEMORY ERASE SIGNAL (MES) CONNECTOR (2-P) [LT GRN/BLK, BLK]
SRS UNIT GROUND
SRS MAIN HARNESS
SRS MAIN HARNESS to SRS UNIT 18-P CONNECTOR
SRS MAIN HARNESS to CABLE REEL 6-P CONNECTOR
SRS UNIT
(Including safing sensor and impact sensor)
Replacement, page 23-78
DATA LINK CONNECTOR (DLC) (3-P)
SERVICE CHECK CONNECTOR (2-P) [BRN/WHT, BLU/WHT]

Description

The SRS is a safety device which, when used in conjunction with the seat belt, is designed to help protect the driver and front passenger in a frontal impact exceeding a certain set limit. The system consists of the SRS unit (including safing sensor and impact sensor), the cable reel and driver's airbag, and front passenger's airbag.

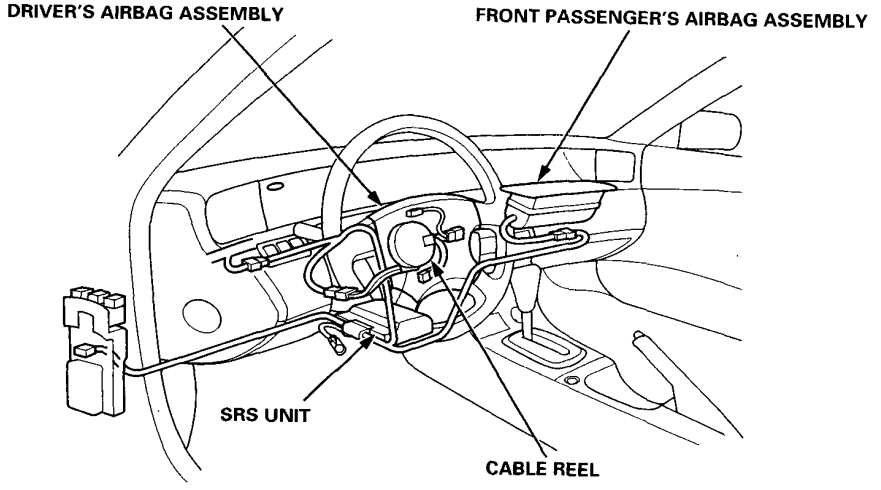

Operation

The main circuit in the SRS unit senses and judges the force of impact and, if necessary, ignites the inflator charges. If battery voltage is too low or power is disconnected due to the impact, the back-up power circuit will keep voltage at a constant level.

For the SRS to operate:

(1) The impact sensor and safing sensor must activate, and the impact sensor must send an electric signal to the evaluation circuit.
(2) The evaluation circuit must compute the signal, and must send a signal to the ignition drive circuit.
(3) The ignition drive circuit must ignite the inflator charges which deploy the airbags.

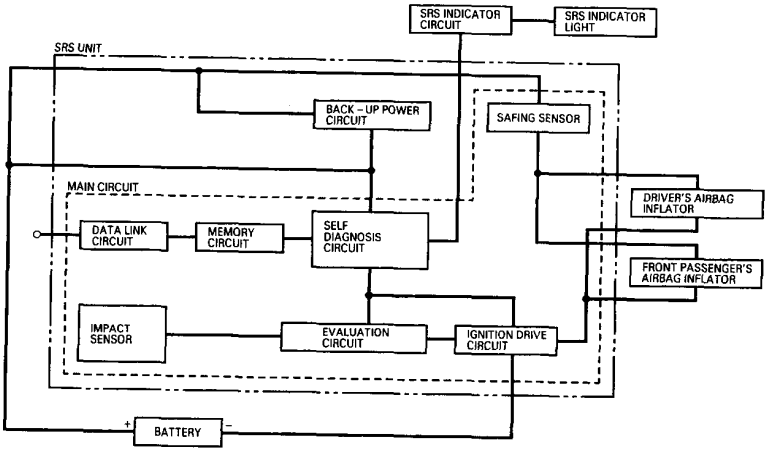

Self-diagnosis System

A self-diagnosis circuit is built into the SRS unit; when the ignition switch is turned ON (II), the SRS indicator light comes on and goes off after about six seconds if the system is operating normally. If the light does not come on, or does not go off after six seconds, or if it comes on while driving, it indicates an abnormality in the system. The system must be inspected and repaired as soon as possible.

For better serviceability, the memory will store the cause of the malfunction, and the data link circuit passes on the information from the memory to the data link connector.

Circuit Diagram

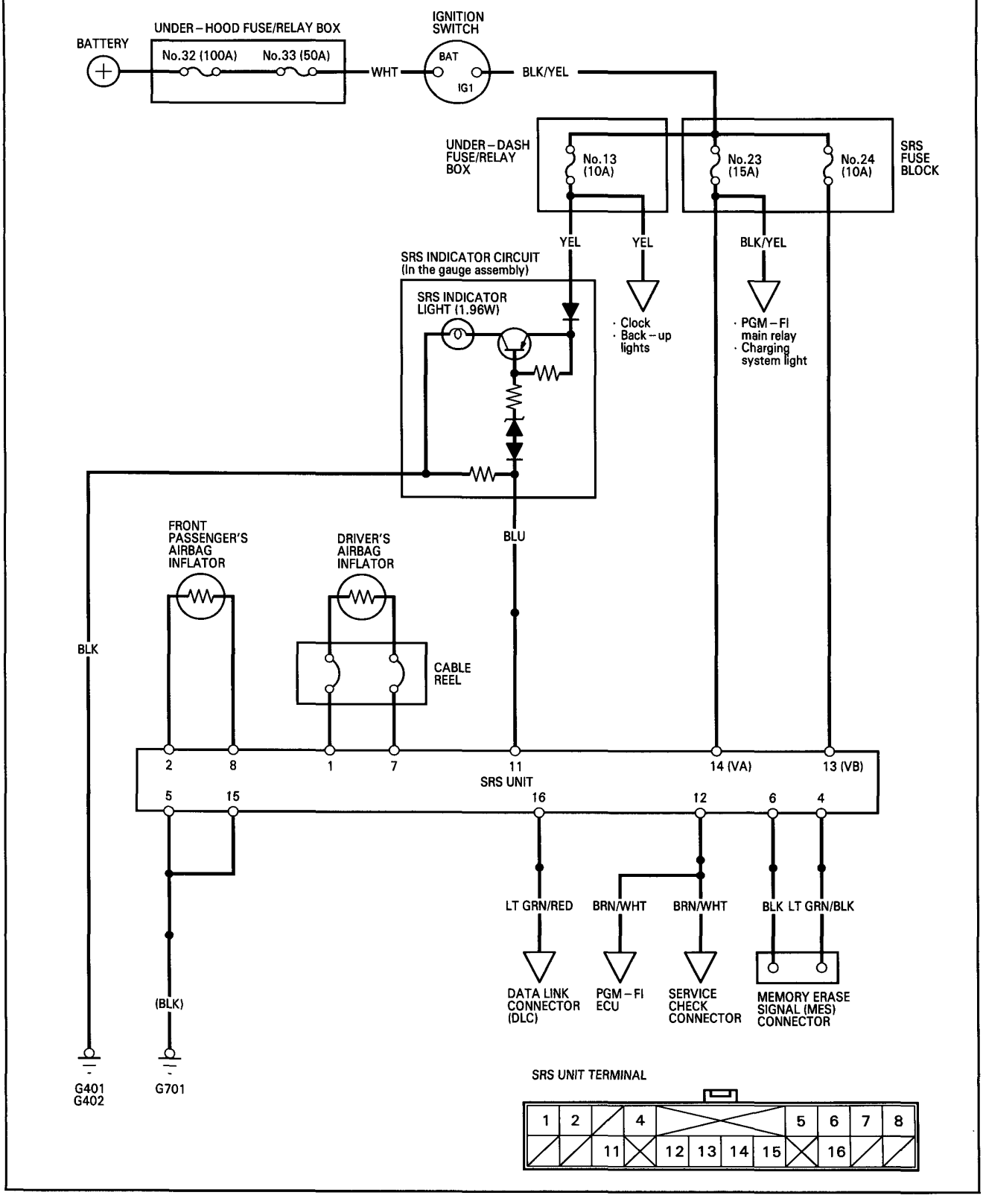

Precautions/Procedures

General Precautions

- Carefully inspect any SRS part before you install it. *Do not install any part that shows signs of being dropped or improperly handled, such as dents, cracks or deformation:*

  — Airbag assemblies
  — Cable reel
  — SRS unit

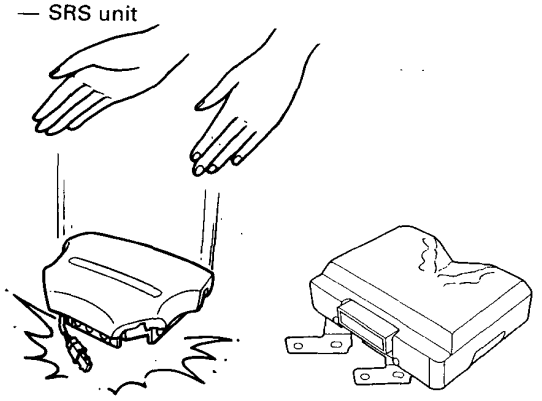

- Use only a digital multimeter to check the system. If it's not a Honda multimeter, make sure its output is 10 mA (0.01 A) or less when switched to the smallest value in the ohmmeter range. A tester with a higher output could damage the airbag circuit or cause accidental deployment and possible injury.

- Do not install used SRS parts from another car. When making SRS repairs, use only new parts.

- Except when performing electrical inspections, always disconnect both the negative cable and positive cable from the battery, and wait at least three minutes before beginning work.

- Replacement of the combination light and wiper/washer switches and cruise control switch can be done without removing the steering wheel:

  — Combination light and wiper/washer switch replacement.
  — Cruise control set/resume switch replacement.

- Whenever the ignition switch is ON (II), or has been turned OFF for less than three minutes, be careful not to bump the SRS unit; the airbags could accidentally deploy and cause damage or injuries.

- Whenever the airbag has been activated, replace the SRS unit.

Airbag Handling and Storage

Do not try to disassemble the airbag assembly. It has no serviceable parts. Once an airbag has been operated (deployed), it cannot be repaired or reused.

For temporary storage of the airbag assembly during service, please observe the following precautions:

- Store the removed airbag assembly with the pad surface up.

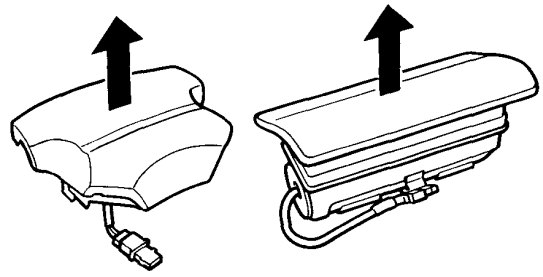

⚠WARNING If the airbag is improperly stored face down, accidental deployment could propel the unit with enough force to cause serious injury.

- Store the removed airbag assembly on a secure flat surface away from any high heat source (exceeding 100°C/212°F) and free of any oil, grease, detergent or water.

CAUTION: Improper handling or storage can internally damage the airbag assembly, making it inoperative. If you suspect the airbag assembly has been damaged, install a new unit and refer to the Deployment/Disposal Procedures for disposing of the damaged airbag.

SRS Unit Precautions

- Take extra care when painting or doing body work in the area below the dashboard. Avoid direct exposure of the SRS unit or wiring to heat guns, welding, or spraying equipment.
- Connect the short connectors before working below the dashboard near the SRS unit.
- After any degree of frontal body damage or after a collision without airbag deployment, inspect the SRS unit for physical damage. If it is dented, cracked, or deformed, replace it.

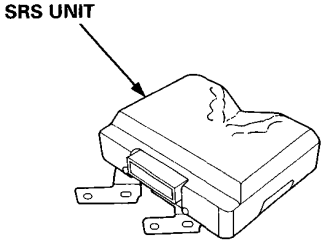

- Be sure the SRS unit is installed securely.
- Do not disassemble the SRS unit.
- Store the SRS unit in a cool and dry place. Do not spill water or oil on the SRS unit, and keep it free from dust.
- During installation or replacement, avoid strong impacts (impact wrench, hammer, etc.) in the area near the SRS unit.

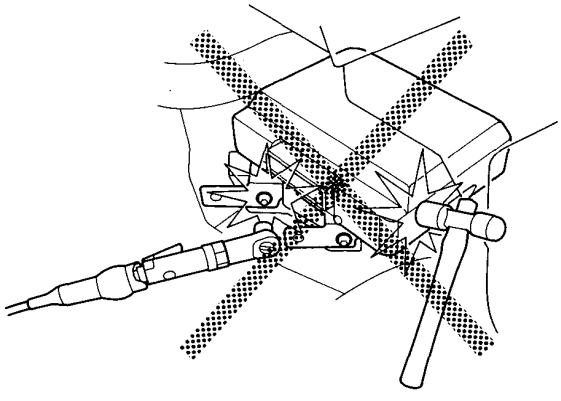

Inspection After Deployment

After a collision in which the airbags were deployed, replace the SRS unit and inspect the following:

1. Inspect all the SRS wire harnesses. Replace, don't repair, any damaged harnesses.
2. Inspect the cable reel for heat damage. If there is any damage, replace the cable reel.
3. After the car is completely repaired, turn the ignition switch on. If the SRS indicator light comes on for about six seconds and then goes off, the SRS system is OK. If the indicator light does not function properly, go to SRS Troubleshooting.

Wiring Precautions

- Never attempt to modify, splice or repair SRS wiring.

  NOTE: SRS wiring can be identified by special yellow outer protective covering.

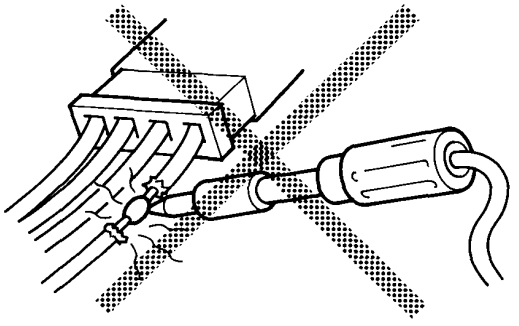

- Be sure to install the harness wires so that they are not pinched or interfering with other car parts.

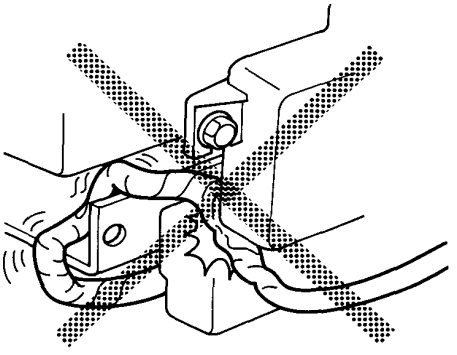

- Make sure all SRS ground locations are clean and grounds are securely fastened for optimum metal-to-metal contact. Poor grounding can cause intermittent problems that are difficult to diagnose.

Disconnecting the SRS Connector at the Under-dash Fuse/Relay Box:

CAUTION: Avoid breaking the connector; it's double-locked.

1. First lift the connector lid with a thin screwdriver, then press the connector tab down and pull the connector out.

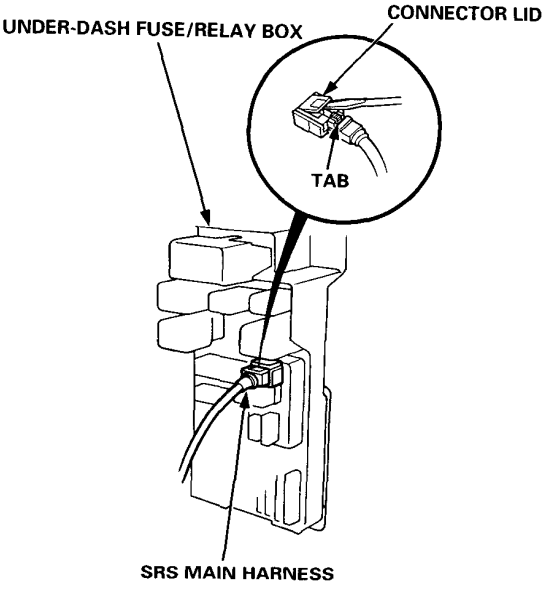

2. To reinstall the connector, push it into position until it clicks, then close its lid.

Steering-related Precautions

Steering Wheel and Cable Reel Alignment

NOTE: To avoid misalignment of the steering wheel or airbag on reassembly, make sure the wheels are turned straight ahead before removing the steering wheel.

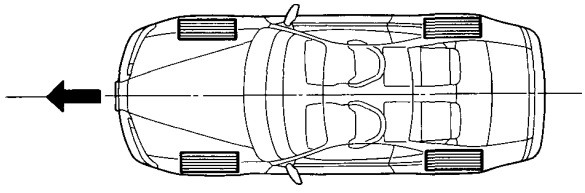

Rotate the cable reel clockwise until it stops.
Then rotate it counterclockwise (approximately two turns) until

— the yellow gear tooth lines up with the alignment mark on the cover.
— the arrow mark on the cable reel label points straight up.

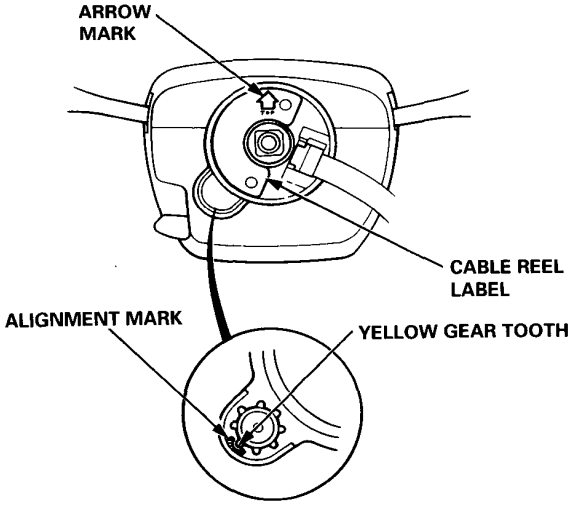

Steering Column Removal

CAUTION:

- **Before removing the steering column, first disconnect the connector between the cable reel and the SRS main harness.**
- **If the steering column is going to be removed without dismounting the steering wheel, lock the steering by turning the ignition key to 0-LOCK position, or remove the key from the ignition so that the steering wheel will not turn.**

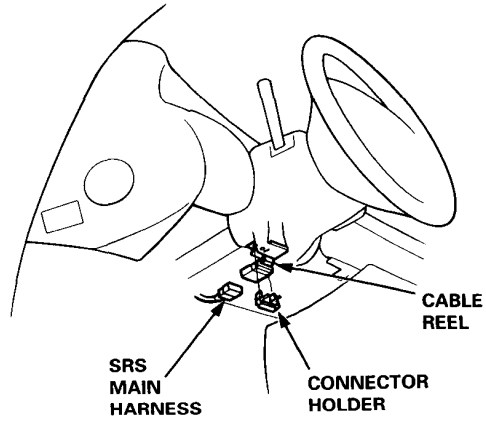

Do not replace the original steering wheel with any other design, since it will make it impossible to properly install the airbag (only use genuine Honda replacement parts).

After reassembly, confirm that the wheels are still turned straight ahead and that the steering wheel spoke angle is correct. If minor spoke angle adjustment is necessary, do so only by adjustment of the tie-rods, not by removing and repositioning the steering wheel.

NOTE: Models with 4WS
Test and adjust the 4WS system.

Connecting the Short Connectors

⚠ WARNING To avoid accidental deployment and possible injury, always connect the protective short connectors on the driver's and front passenger's airbag connectors before working near any SRS wiring.

1. Disconnect the battery negative cable, then disconnect the positive cable from the battery, and wait at least three minutes.

2. Connect the short connectors (RED):

Driver's Side:

- Remove the access panel from the steering wheel, then remove the short connector (RED) from the panel.

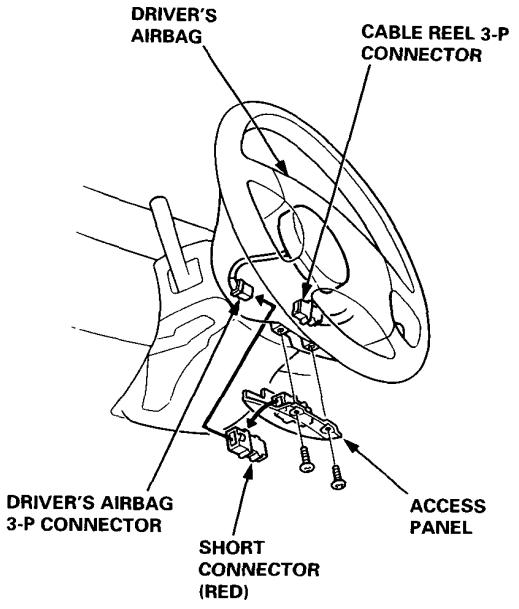

- Disconnect the 3-P connector between the driver's airbag and cable reel, then connect the short connector (RED) to the airbag side of the connector.

Front Passenger's Side:

- Remove the glove box.

- Disconnect the 3-P connector between the front passenger's airbag and SRS main harness, then connect the short connector (RED) to the airbag side of the connector.

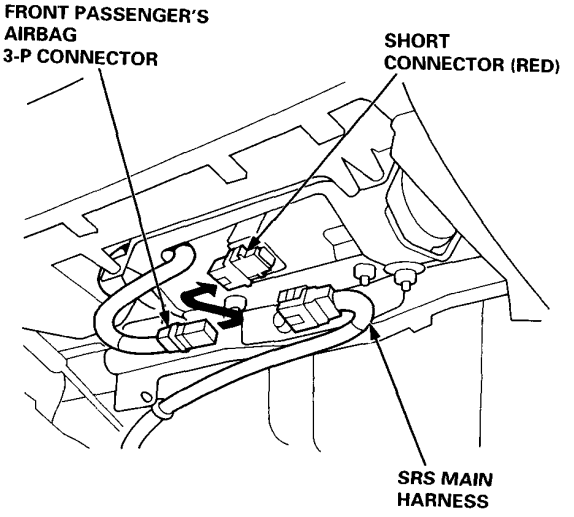

Troubleshooting

Self-diagnostic Procedures

The self-diagnostic function of the SRS system allows it to locate the causes of system problems and to store this information in memory. For easier troubleshooting, this data can be retrieved via the data link circuit.

- When you turn the ignition switch ON (II), the SRS indicator will come on. If it goes off after six seconds, the system is normal.
- If there is an abnormality, the system locates and defines the problem, and stores this information in memory while the SRS indicator light turns on.
  NOTE: The data will remain in the memory even when the ignition switch is turned off, or if the battery is disconnected.
- When you connect the SCS short connector to the service check connector (2-P), and turn the ignition switch ON (II), the SRS indicator light will indicate the diagnostic trouble code (DTC) by the number of blinks.
- After reading and recording the DTC, proceed with the troubleshooting for this code.

Precautions

- Use only a digital multimeter to check the system. If it's not a Honda multimeter, make sure its output is 10 mA (0.01 A) or less when switched to the smallest value in the ohmmeter range. A tester with a higher output could damage the airbag circuit or cause accidental airbag deployment and possible injury.
- Whenever the ignition switch is ON (II), or has been turned OFF for less than three minutes, be careful not to bump the SRS unit; the airbags could accidentally deploy and cause damage or injuries.
- Before you remove the SRS main harness, connect the short connectors (RED) to the airbag connectors.
- Do not touch a tester probe to the terminals in the SRS unit or harness connectors, and do not connect the terminals with a jumper wire. Use only the test harness and the SCS short connectors.
- Make sure the battery is sufficiently charged. If the battery is dead or low, or the back-up power circuit in the SRS unit is faulty, measuring values won't be correct. Therefore, in case of multiple DTCs including DTC 5-1 (SRS unit), replace the SRS unit first, then troubleshoot the other code(s).

Diagnostic Trouble Code (DTC)

The SRS indicator light indicates the DTC by the number of blinks when the SCS short connector is connected to the service check connector.

1. With the ignition switch OFF, connect the SCS short connector to the short check connector.

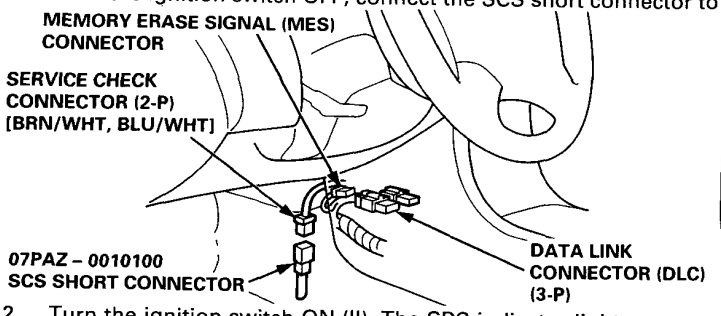

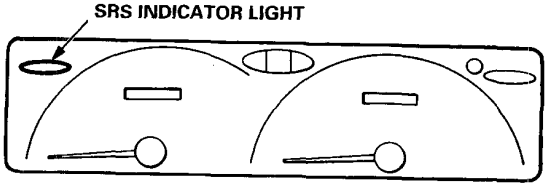

2. Turn the ignition switch ON (II). The SRS indicator light comes on for about twelve seconds and goes off. Then it will indicate the DTC:
   — The DTC consists of a main code and a sub-code.
   — Including the most recent problem, up to three different malfunctions can be indicated.
   — In case of a continuous failure, the DTC will be indicated repeatedly (see example 1. below).
   — In case of an intermittent failure, the SRS indicator light will indicate the DTC one time, then it will stay on (see example 2. below).
   — If both a continuous and an intermittent failure occur, both DTCs will be indicated as continuous failures.
   — In case the system is normal (no DTC), the SRS indicator light will start blinking continuous short blinks (see example 3.).

Examples of DTC Indications:

1. Continuous failure: SRS Indicator Light is:

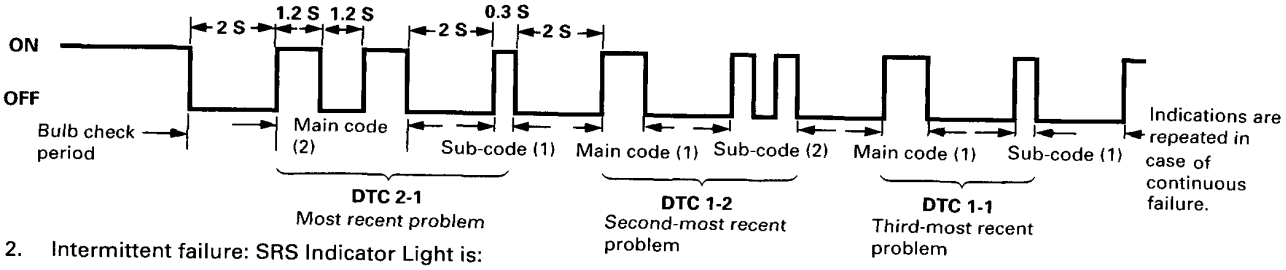

2. Intermittent failure: SRS Indicator Light is:

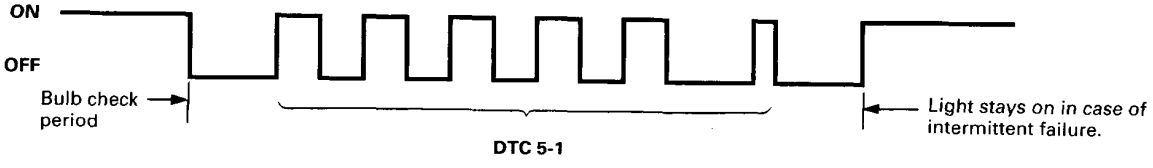

3. Normal (no failure): SRS Indicator Light is:

Troubleshooting of Intermittent Failures

If there was a malfunction, but it doesn't recur, it will be stored in the memory as an intermittent failure, and the SRS indicator light comes on.

After checking the DTC, troubleshoot as follows:

1. Record the DTC.
2. Remove the SCS short connector from the service check connector.
3. Erase the DTC memory (see "Erasing the DTC Memory").
4. With the shift lever in neutral, turn the ignition switch ON (II), and let the engine idle.
5. Connect the SCS short connector to the service check connector. The SRS indicator light will blink continuous short blinks.

6. Shake the wire harness and the connector, and/or take a test drive (quick acceleration, quick braking, cornering) to find the cause of the intermittent failure. If the problem recurs, the SRS indicator light will stop blinking and stay on.

7. If you can't duplicate the intermittent failure, the system is OK at this time. Disconnect the SCS short connector.

Erasing the DTC Memory

NOTE: Use only the SCS short connector. Otherwise, you may not erase the memory because it is akward to connect and disconnect a jumper wire quickly enough.

1. Turn the ignition switch OFF, and disconnect the SCS short connector from the service check connector.
2. Connect the SCS short connector to the MES connector.

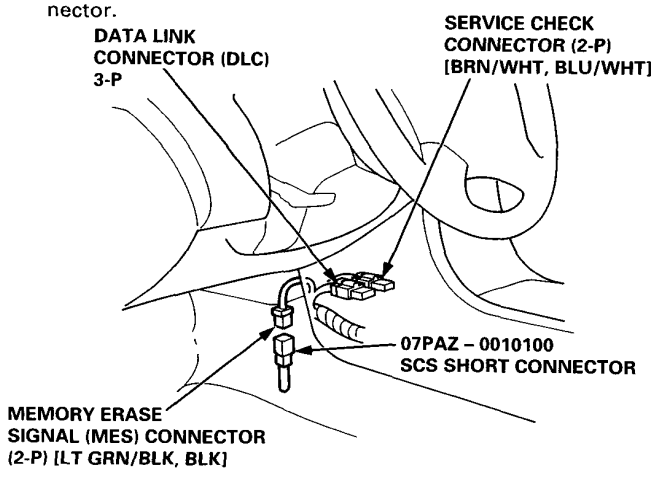

3. Turn the ignition switch ON (II).
4. The SRS indicator light comes on for about six seconds and goes off. Remove the SCS short connector from the MES connector within four seconds after the SRS indicator light went off.
5. The SRS indicator light comes on again. Reconnect the SCS short connector to the MES connector within four seconds after the SRS indicator light came on.
6. The SRS indicator light goes off. Remove the SCS short connector from the MES connector within four seconds.
7. The SRS indicator light indicates that the memory is erased by blinking two times.

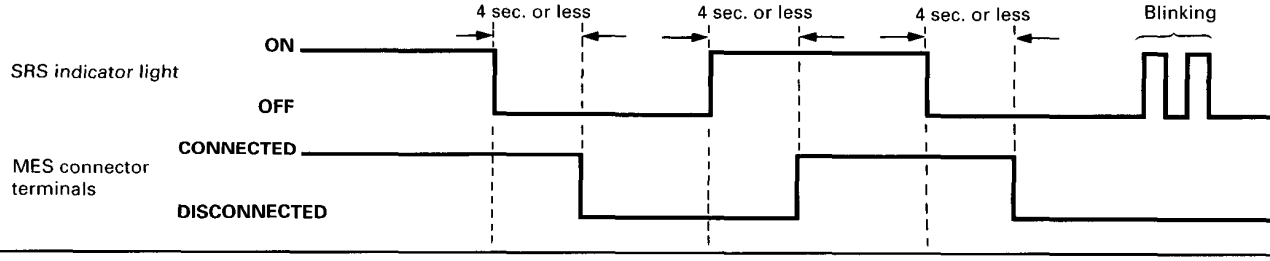

Diagnostic Trouble Code (DTC) Chart

Nippon Denso:

SRS indicator light	DTC	Possible cause	Corrective action	See page
doesn't come on	none	Faulty SRS indicator light circuit	Troubleshooting	23-44
comes on	1-1	Open in the driver's airbag inflator or increased resistance	Troubleshooting	23-52
	1-2	Short to another wire in the driver's airbag inflator or decreased resistance		23-54
	1-3	Short to power in the driver's airbag inflator		23-56
	1-4	Short to ground in the driver's airbag inflator		23-58
	2-1	Open in the passenger's airbag inflator or increased resistance	Troubleshooting	23-61
	2-2	Short to another wire in the passenger's airbag inflator or decreased resistance		23-63
	2-3	Short to power in the passenger's airbag inflator		23-65
	2-4	Short to ground in the passenger's airbag inflator		23-66
	5-1	Internal failure of the SRS unit	SRS unit replacement	23-68
	10-1	SRS unit replacement code (SRS unit must not be used any longer)		
	9-1 none	Faulty SRS indicator light circuit Faulty SRS power supply system	Troubleshooting	23-47

NOTE:
- In case DTC 5-1 is indicated, replace the SRS unit. If multiple DTCs including DTC 5-1 are indicated, first replace the SRS unit, then recheck the DTC indication.
- When you return the SRS unit in case of a warranty claim, do not erase the memory. The data will remain in the memory even when the ignition switch is turned off.
- If an intermittent failure occurs, DTC 9-1 will be indicated. In case of a continuous problem, there will be no DTC.

SRS Indicator Light Wire Connections

SRS Indicator Light Power Circuit

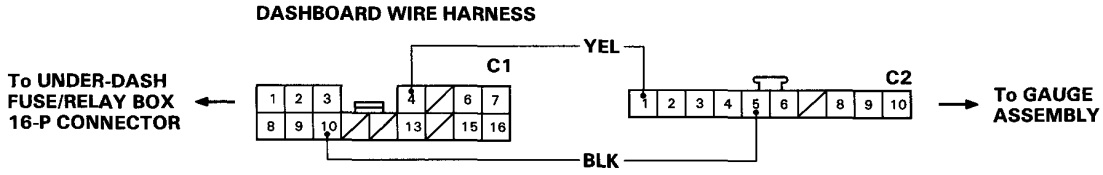

SRS Indicator Light Control Circuit

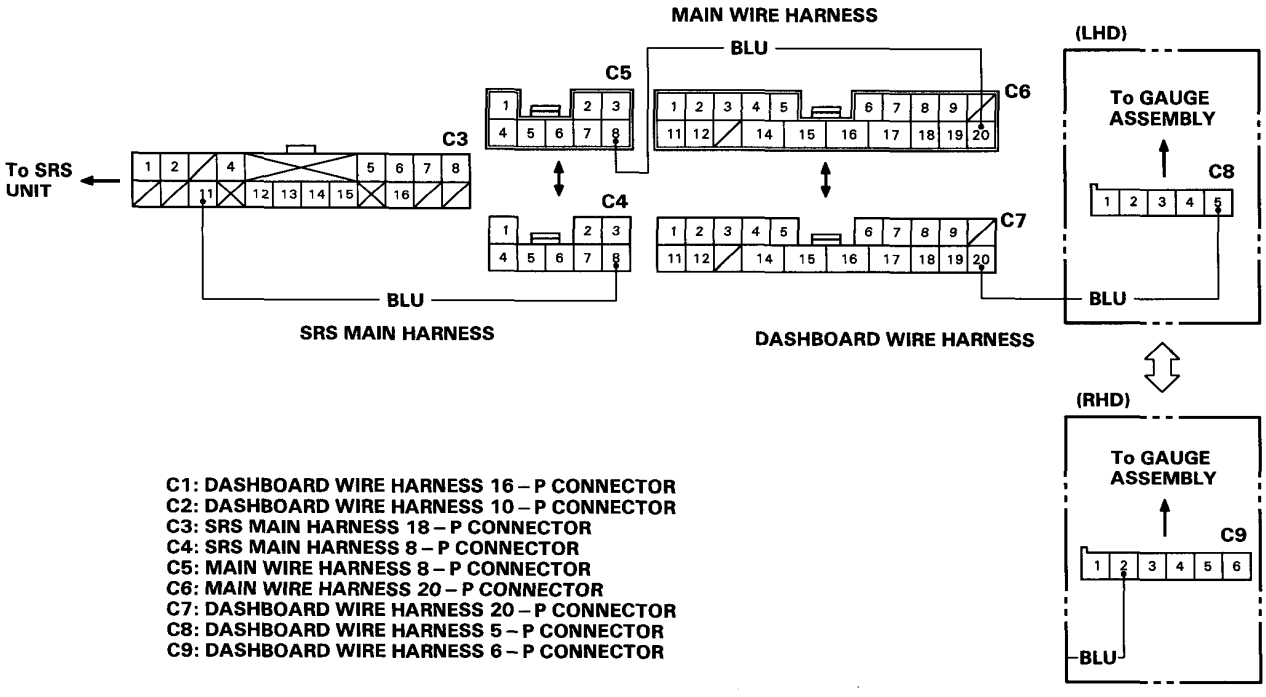

C1: DASHBOARD WIRE HARNESS 16 – P CONNECTOR
C2: DASHBOARD WIRE HARNESS 10 – P CONNECTOR
C3: SRS MAIN HARNESS 18 – P CONNECTOR
C4: SRS MAIN HARNESS 8 – P CONNECTOR
C5: MAIN WIRE HARNESS 8 – P CONNECTOR
C6: MAIN WIRE HARNESS 20 – P CONNECTOR
C7: DASHBOARD WIRE HARNESS 20 – P CONNECTOR
C8: DASHBOARD WIRE HARNESS 5 – P CONNECTOR
C9: DASHBOARD WIRE HARNESS 6 – P CONNECTOR

The SRS Indicator Light Doesn't Come On

CAUTION: Whenever the ignition switch is ON (II), or has been turned OFF for less than three minutes, be careful not to bump the SRS unit; the airbags could accidentally deploy and cause damage or injuries.

Check the power supply (fuse):
Turn the ignition switch ON (II), and check whether the other indicator lights come on or not (brake system, etc.).

Do the other indicator lights come on?

YES — NO

Check the No. 13 (10 A) fuse in the under-dash fuse/relay box.

Is the fuse OK?

YES — NO

Replace the No. 13 (10 A) fuse, and check that the SRS indicator light comes on.

Does the SRS indicator light come on?

YES — NO

END

Check for an open in the wire harness between fuse No. 13 (10 A) and the gauge assembly, and repair. Check that the SRS indicator light comes on.

Does the SRS indicator light come on?

YES — NO

END

Check the SRS unit:
1. Turn the ignition switch OFF.
2. Disconnect the battery negative cable, then the positive cable, and wait for three minutes.
3. Connect the short connectors (RED) to the airbag connectors (see page 23-38).
4. Disconnect the SRS main harness 18-P connector from the SRS unit.
5. Reconnect the battery positive cable, then the negative cable.
6. Turn the ignition switch ON (II), and check that the SRS indicator light comes on.

Does the SRS indicator light come on?

YES — NO

Faulty SRS unit; replace the unit.

To page 23-45

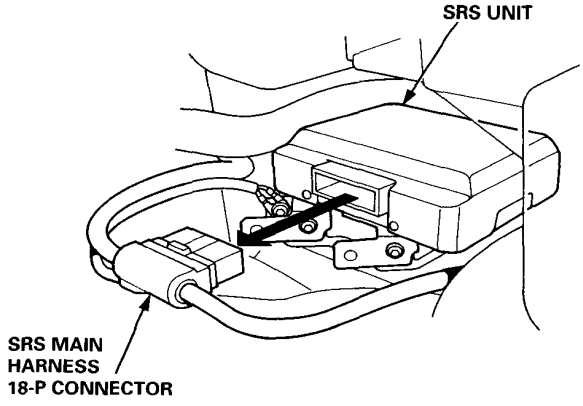

From page 23-44

Check the SRS indicator circuit input voltage:
1. Turn the ignition switch OFF.
2. Connect Test Harness B between the SRS unit and the SRS main harness 18-P connector.
3. Connect jumper wires, as shown, to the No. 13, 14, 15, and 16 terminals on rows A (SRS unit end) and B (SRS main harness end) of Test Harness B.
   NOTE: Be careful not to connect the jumper wires to other terminals.
4. Connect a voltmeter between terminals A11 (+) and A5 (–).
5. Turn the ignition switch ON (II), and measure voltage.

Is there 8.5 V or less for six seconds after the ignition switch has been turned ON (II)?

YES — NO

Faulty SRS unit; replace the SRS unit.

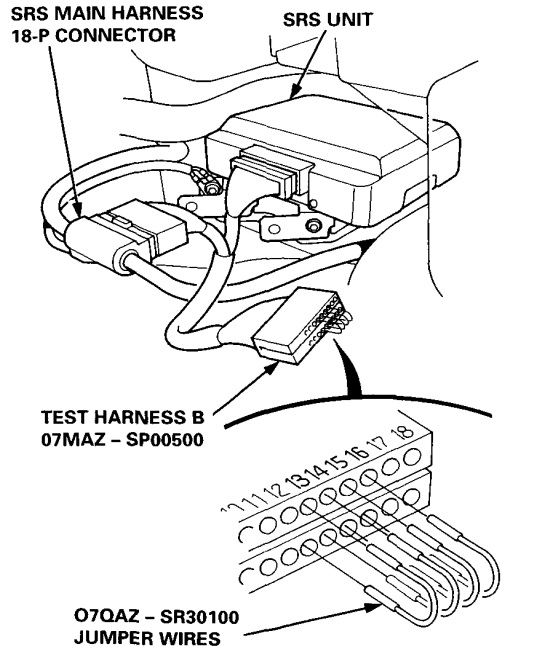

Check the SRS indicator light bulb:
1. Turn the ignition switch OFF, and disconnect Test Harness B.
2. Connect the SRS main harness 18-P connector to the SRS unit.
3. Remove the gauge assembly.
4. Check for blown SRS indicator light bulb.

Is the SRS indicator light bulb OK?

YES — NO

Replace the bulb, and reconnect the gauge assembly connectors. Then turn the ignition switch ON (II).

Does the SRS indicator light come on?

YES — NO

END

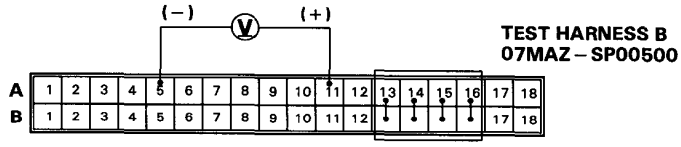

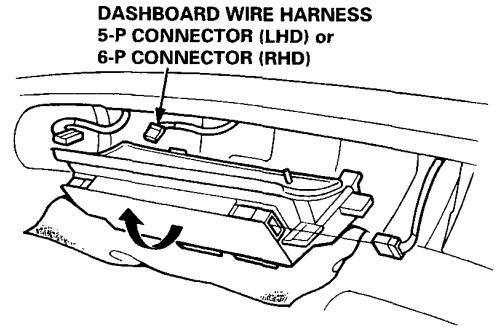

Check the SRS indicator light circuit:
1. Disconnect the dashboard wire harness 5-P connector (LHD) or 6-P connector (RHD) from the gauge assembly.
2. Connect a voltmeter between the No. 5 terminal (+) of the dashboard wire harness 5-P connector (LHD) or No. 2 terminal (+) of the dashboard wire harness 6-P connector (RHD) and ground.
3. Turn the ignition switch ON (II), and measure voltage.

Is there 8.5 V or less for six seconds after the ignition switch has been turned ON (II)?

YES — NO

Faulty SRS indicator light circuit in the gauge assembly; replace the gauge assembly.

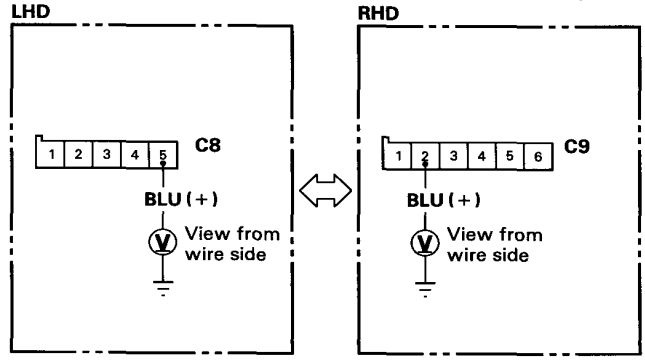

To page 23-46

(cont'd)

The SRS Indicator Light Doesn't Come On (cont'd)

From page 23-45

Check the wire harness of the SRS indicator light circuit (1):
1. Turn the ignition switch OFF.
2. Disconnect the main wire harness 20-P connector from the dashboard wire harness.
3. Connect a voltmeter between the No. 20 terminal (+) of the main wire harness 20-P connector and ground.
4. Turn the ignition switch ON (II), and measure voltage.

Is there 8.5 V or less for six seconds after the ignition switch has been turned ON (II)?

YES

Short to power in the BLU wire of the dashboard wire harness; replace the harness.

NO

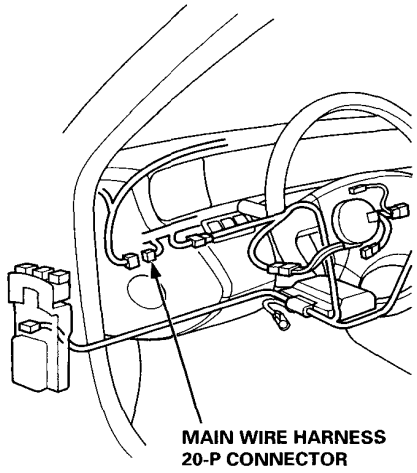

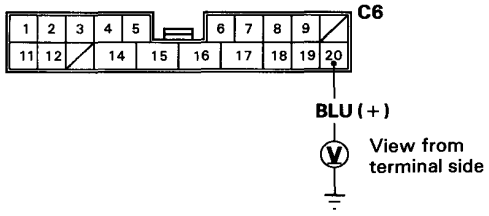

Check the wire harness of the SRS indicator light circuit (2):
1. Turn the ignition switch OFF.
2. Disconnect the SRS main harness 8-P connector from the main wire harness.
3. Connect a voltmeter between the No. 8 terminal (+) of the SRS main harness 8-P connector and ground.
4. Turn the ignition switch ON (II), and measure voltage.

Is there 8.5 V or less for six seconds after the ignition switch has been turned ON (II)?

YES

Short to power in the BLU wire of the main wire harness; replace the harness.

NO

Short to power in the BLU wire of the SRS main harness; replace the harness.

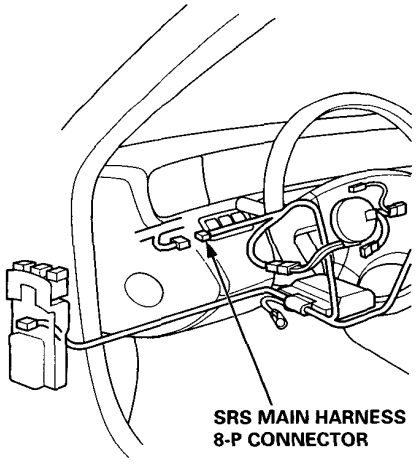

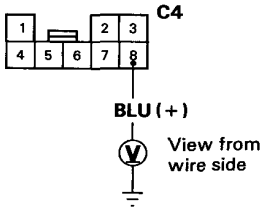

DTC 9-1 or No Code

CAUTION: Whenever the ignition switch is ON (II), or has been turned OFF for less than three minutes, be careful not to bump the SRS unit; the airbags could accidentally deploy and cause damage or injuries.

Check the SRS fuse:
1. Turn the ignition switch OFF.
2. Check for blown No. 24 (10 A) fuse.

Is the fuse OK?

YES — NO

Replace the fuse. Turn the ignition switch ON (II), and check that the fuse doesn't blow.

Does the fuse blow?

YES — NO

END

Check for short to ground between the under-dash fuse/relay box and the SRS unit:
1. Turn the ignition switch OFF.
2. Disconnect the battery negative cable, then disconnect the positive cable, and wait for three minutes.
3. Connect the short connectors (RED) to the airbag connectors (see page 23-38).
4. Disconnect the SRS main harness 18-P connector from the SRS unit, and connect Test Harness B between the 18-P connector and the SRS unit.
5. Check for continuity between the No. B13 and B5 terminals of Test Harness B.

Is there continuity?

YES — NO

Check for short to ground in the SRS main harness:
1. Disconnect the SRS main harness 2-P connector from the under-dash fuse/relay box.
2. Check for continuity between the No. B13 and B5 terminals of Test Harness B.

Is there continuity?

YES — NO

Short to ground in the SRS main harness; replace the harness.

Short to ground in the SRS fuse block; replace the SRS fuse block.

Faulty SRS unit; replace the SRS unit.

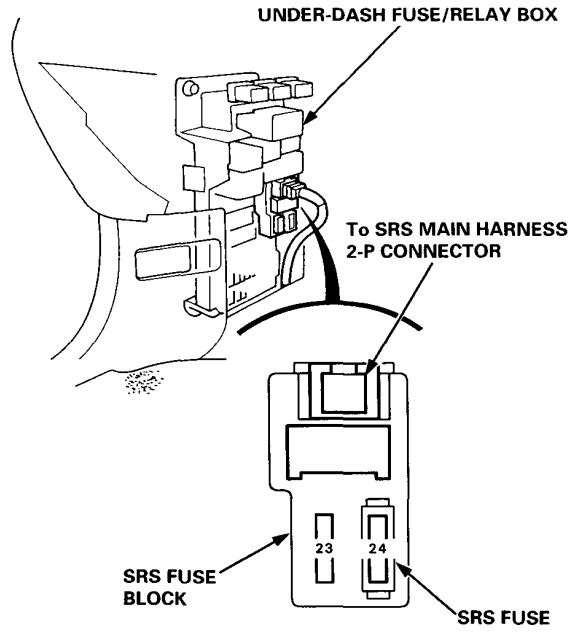

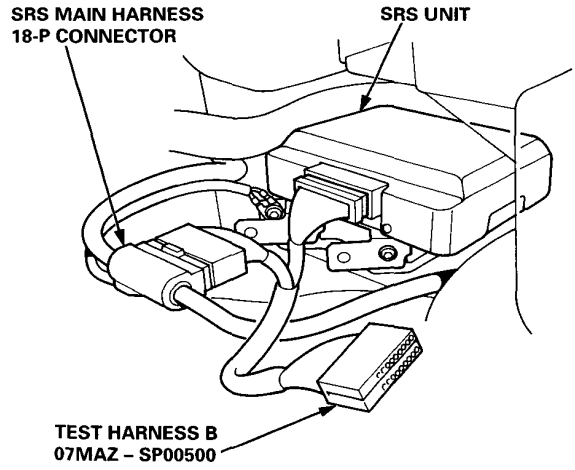

TEST HARNESS B 07MAZ – SP00500

A	1	2	3	4	5	6	7	8	9	10	11	12	13	14	15	16	17	18
B	1	2	3	4	5	6	7	8	9	10	11	12	13	14	15	16	17	18

To page 23-48

(cont'd)

DTC 9-1 or No Code (cont'd)

From page 23-47

Connect Test Harness B:
1. Disconnect the negative battery cable, then the positive cable, and wait for three minutes.
2. Connect the short connectors (RED) to the airbag connectors (see page 23-38).
3. Disconnect the SRS main harness 18-P connector from the SRS unit, and connect Test Harness B between the 18-P connector and the SRS unit.
4. Reconnect the battery positive cable, then the negative cable.

Check for an open in the SRS main harness:
1. Connect a voltmeter between the No. B13 (+) and B5 (–) terminals of Test Harness B.
2. Turn the ignition switch ON (II), and measure voltage.

Is there battery voltage?

YES

NO

Open in the SRS main harness; replace the harness.

Check the SRS indicator circuit input voltage:
1. Turn the ignition switch OFF, and disconnect Test Harness B.
2. Connect the SRS main harness 18-P connector to the SRS unit.
3. Disconnect the SRS main harness 8-P connector from the main wire harness.
4. Connect a voltmeter between the No. 8 terminal (+) of the SRS main harness 8-P connector and ground.
5. Turn the ignition switch ON (II), and measure voltage.

Is there 8.5 V or more six seconds after the ignition switch has been turned ON (II)?

YES

NO

Check for short to ground in the SRS indicator light circuit (1):
1. Turn the ignition switch OFF.
2. Check for continuity between the No. 8 terminal (+) of the main wire harness 8-P connector and ground.

Is there continuity (200 Ω or less)?

YES

NO

Check for short to ground in the SRS indicator light circuit (2):
1. Remove the dashboard wire harness 20-P connector from the main wire harness.
2. Check for continuity between the No. 20 terminal (+) of the dashboard wire harness 20-P connector and ground.

Is there continuity (200 Ω or less)?

YES

NO

Failure in the SRS unit due to short to ground in the BLU wire of the main wire harness; replace the main wire harness and the SRS unit.

(C) (D)
To page 23-49

(E)
To page 23-49

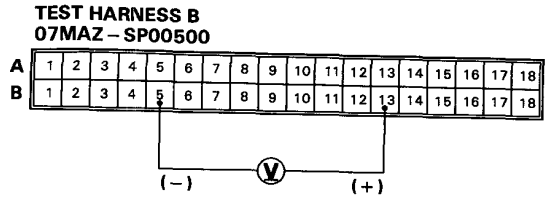

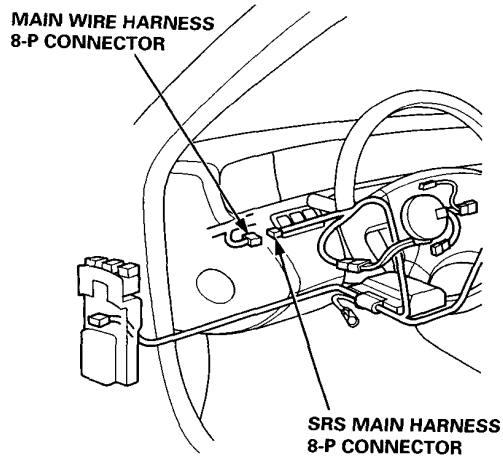

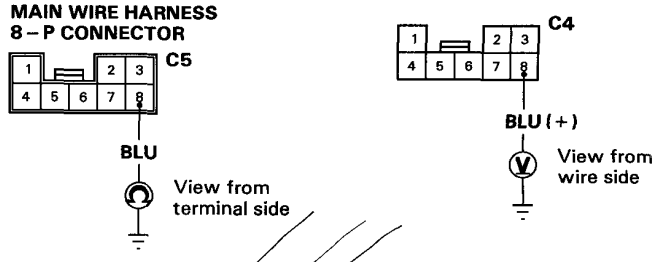

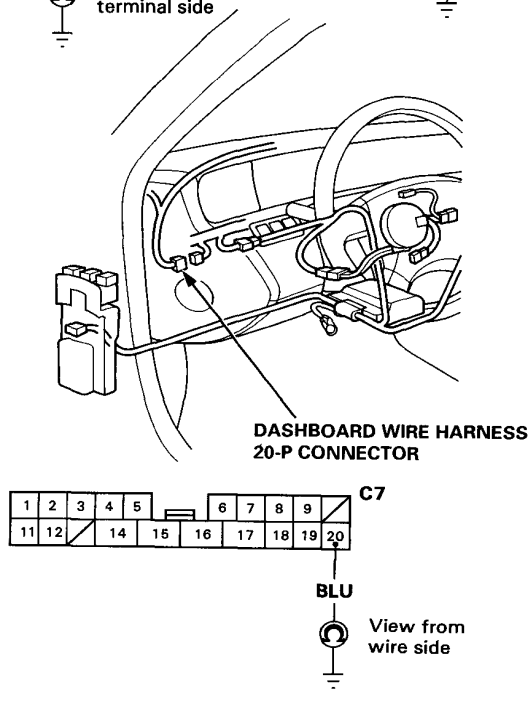

From page 23-48

From page 23-48

(C) (D)

(E)

Check for short to ground in the SRS indicator light circuit (3):
1. Remove the gauge assembly.
2. Check for continuity between the No. T1 terminal of the gauge assembly 5-P connector and the No. B6 terminal of the 10-P connector (LHD), or between the No. C5 terminal of the gauge assembly 6-P connector and the No. B6 terminal of the 10-P connector (RHD).

Is there continuity (200 Ω or less)?

YES

Failure in the SRS unit due to short to ground in the SRS indicator light circuit in the gauge assembly; replace the gauge assembly and the SRS unit.

NO

Failure in the SRS unit due to short to ground in the BLU wire of the dashboard wire harness; replace the dashboard wire harness and the SRS unit.

Check for an open in the SRS main harness:
1. Turn the ignition switch OFF.
2. Disconnect the battery negative cable, then disconnect the positive cable, and wait for three minutes.
3. Connect the short connectors (RED) to the airbag connectors (see page 23-38).
4. Disconnect the SRS main harness 18-P connector from the SRS unit, and connect Test Harness B between the SRS unit and the 18-P connector.
5. Check for continuity between the No. B11 terminal of Test Harness B and the No. 8 terminal of the SRS main harness 8-P connector.

Is there continuity?

YES

NO

Open in the SRS main harness; replace the harness.

(E) (G)

To page 23-50

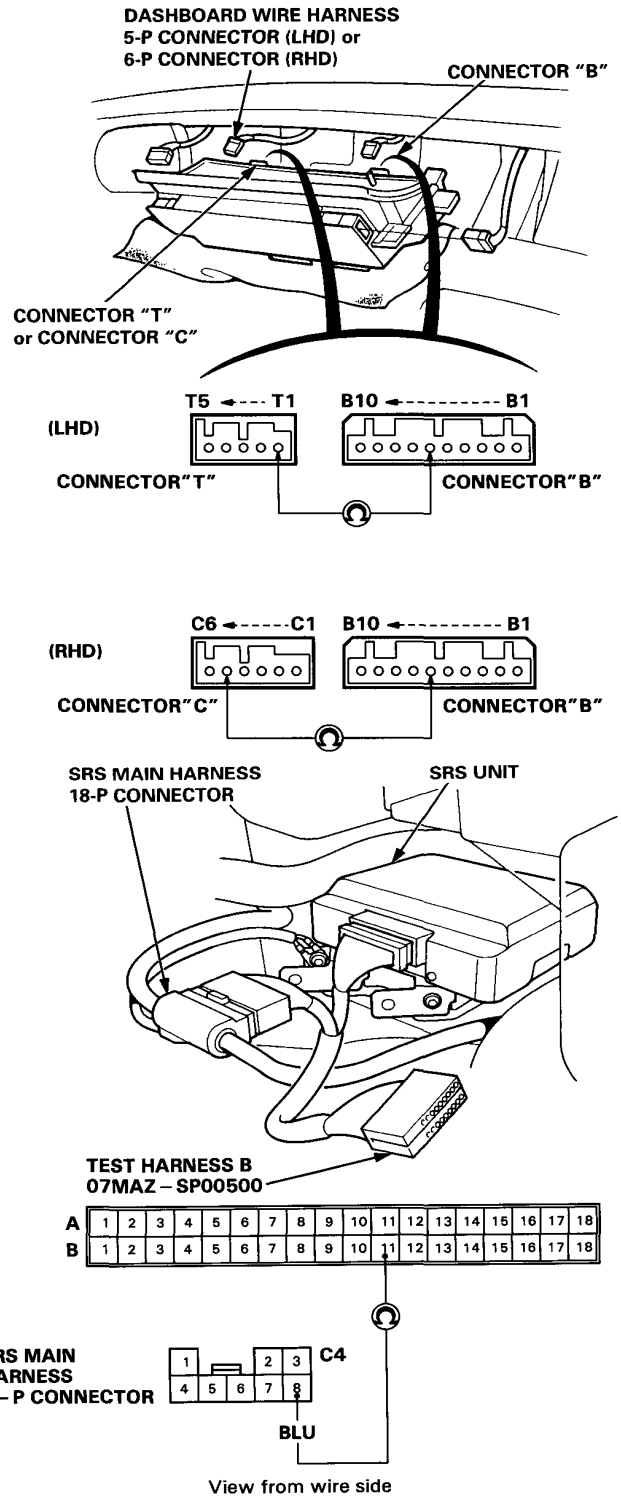

(cont'd)

DTC 9-1 or No Code (cont'd)

From page 23-49

(F) (G)

Check for continuity between terminals No. B11 and No. B5 of Test Harness B.

Is there continuity?

YES

NO

Failure in the SRS unit due to short to ground in the SRS main harness; replace the SRS main harness and the SRS unit.

Faulty SRS unit; replace the SRS unit.

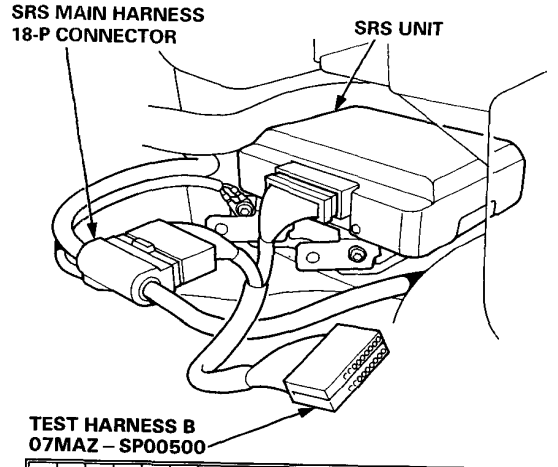

Check the SRS indicator light circuit:
1. Turn the ignition switch OFF.
2. Connect the SRS main harness 8-P connector to the main wire harness.
3. Disconnect the main wire harness 20-P connector from the dashboard wire harness.
4. Connect a voltmeter between the No. 20 terminal (+) of the main wire harness 20-P connector and ground.
5. Turn the ignition switch ON (II), and measure voltage.

Is there 8.5 V or more six seconds after the ignition switch has been turned ON (II)?

YES

NO

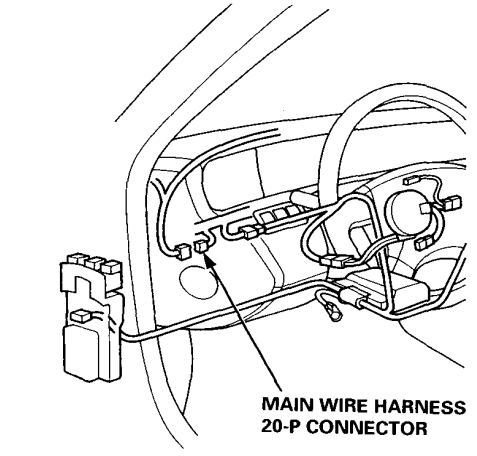

Check the main wire harness:
1. Turn the ignition switch OFF.
2. Check for continuity between the No. 20 terminal of the main wire harness 20-P connector and body ground.

Is there continuity?

YES

NO

Failure in the SRS unit due to short to ground in the BLU wire of the SRS main harness; replace the SRS main harness and the SRS unit.

Open in the BLU wire of the SRS main harness; replace the SRS main harness.

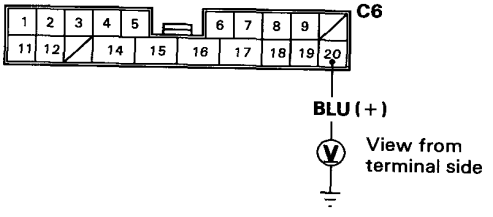

To page 23-51

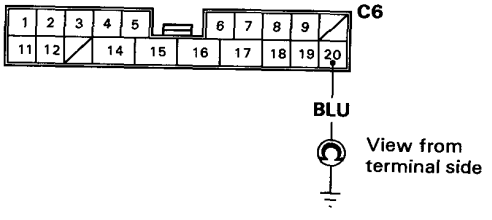

From page 23-50

(F)

Check the SRS indicator light circuit:
1. Turn the ignition switch OFF.
2. Connect the main wire harness 20-P connector to the dashboard wire harness.
3. Remove the gauge assembly.
4. Disconnect the dashboard wire harness 5-P connector (LHD) or 6-P connector (RHD) from the gauge assembly.
5. Connect a voltmeter between the No. 5 terminal (+) of the dashboard wire harness 5-P connector (LHD) or No. 2 terminal (+) of the dashboard wire harness 6-P connector (RHD) and ground.
6. Turn the ignition switch ON (II), and measure voltage.

Is there 8.5 V or more six seconds after the ignition switch has been turned ON (II)?

YES

Faulty SRS indicator light circuit in the gauge assembly; replace the gauge assembly.

NO

Check the dashboard wire harness:
1. Turn the ignition switch OFF.
2. Check for continuity between the No. 5 terminal of the dashboard wire harness 5-P connector (LHD) or No. 2 terminal of the dashboard wire harness 6-P connector (RHD) and ground.

Is there continuity (200 Ω or less)?

YES

Failure in the SRS unit due to short to ground in the BLU wire of the dashboard wire harness. Replace the dashboard wire harness and the SRS unit.

NO

Open in the BLU wire of the dashboard wire harness; replace the dashboard wire harness.

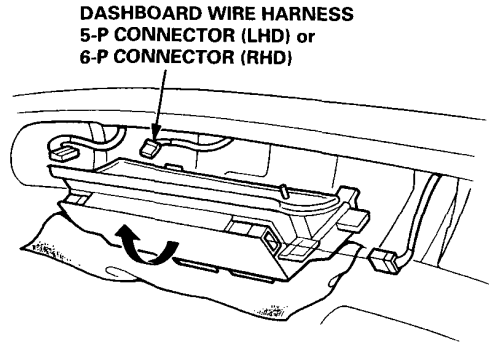

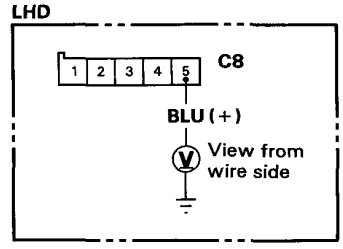

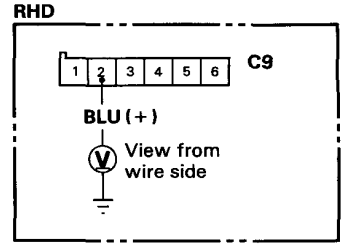

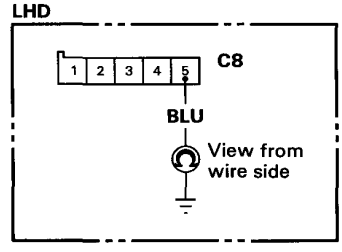

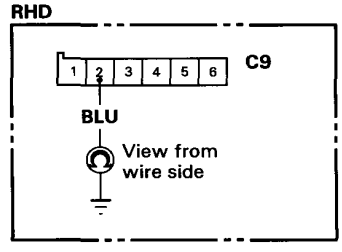

DTC 1-1

CAUTION: Whenever the ignition switch is ON (II), or has been turned OFF for less than three minutes, be careful not to bump the SRS unit; the airbags could accidentally deploy and cause damage or injuries.

Check for an open in the driver's airbag inflator:
1. Turn the ignition switch OFF.
2. Disconnect the battery negative cable, then disconnect the positive cable, and wait for three minutes.
3. Connect the short connector (RED) to the driver's airbag assembly.
   CAUTION: Do not disconnect the passenger's airbag connector.
4. Connect SRS short connector A to the cable reel 3-P connector.
5. Connect the SCS short connector to the service check connector.
6. Reconnect the battery positive cable, then reconnect the negative cable.
7. Turn the ignition switch ON (II), and record the most recent DTC.

Is DTC 1-1 or DTC 1-2 indicated?

1-1 | 1-2

Open in the driver's airbag inflator; replace the driver's airbag assembly (see page 23-68).

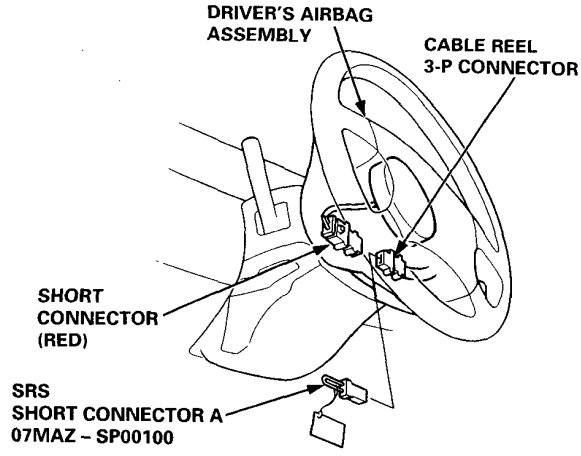

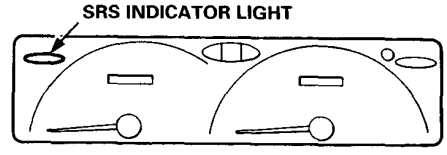

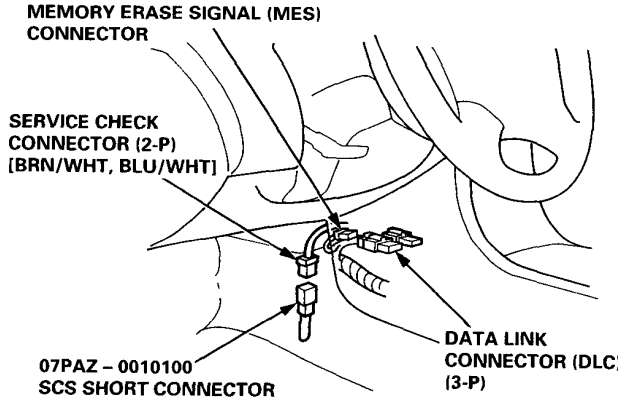

Connect Test Harness C:
1. Turn the ignition switch OFF, and remove the SCS short connector.
2. Disconnect the battery negative cable, then disconnect the positive cable, and wait for three minutes.
3. Remove the glove box, and connect the short connector (RED) to the passenger's airbag assembly (see page 23-38).
4. Remove the dashboard lower cover, and disconnect the cable reel 6-P connector from the SRS main harness.
5. Connect Test Harness C to the cable reel 6-P connector.
   NOTE:
   - Do not connect the battery cables.
   - Disconnect only the SCS short connector.

To page 23-53

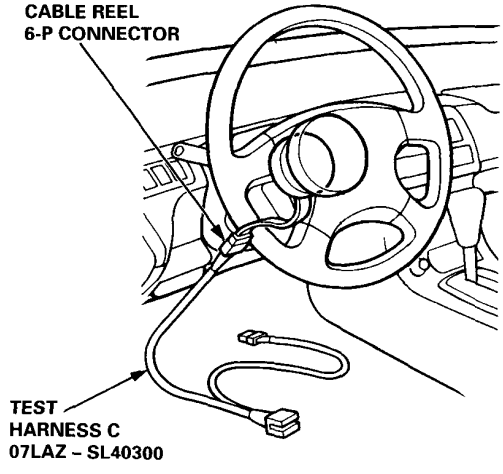

From page 23-52

Check for an open in the cable reel:
Check for continuity between the No. 4 and No. 5 terminals of Test Harness C.

Is there continuity?

YES — NO

Open in the cable reel; replace the cable reel (see page 23-74).

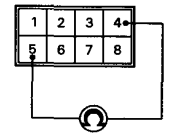

Check the SRS Unit (1):

1. Disconnect the SRS main harness 6-P connector from the cable reel.
2. Disconnect the SRS main harness 18-P connector from the SRS unit, and connect Test Harness B.
3. Connect jumper wires, as shown, to the No. 13, 14, 15, and 16 terminals on rows A (SRS unit end) and B (SRS main harness end) of Test Harness B.
   NOTE: Be careful not to connect jumper wires to the other terminals.
4. Connect the positive battery cable, then connect the negative cable.
5. Connect a voltmeter between terminals No. A1 (+) and No. A5 (–) of Test Harness B.
6. Turn the ignition switch ON (II), and measure voltage. There should be 9.4 – 14 V.
7. Turn the ignition switch OFF, and measure resistance between terminals No. A7 and A5. There should be 0.75 – 1.0 kΩ.
   NOTE: The resistance will be unstable if you measure immediately after you turn the ignition switch OFF. Allow it to settle, then take the reading.

Are voltage and resistance as specified?

YES — NO

Faulty SRS unit; replace the unit (see page 23-78).

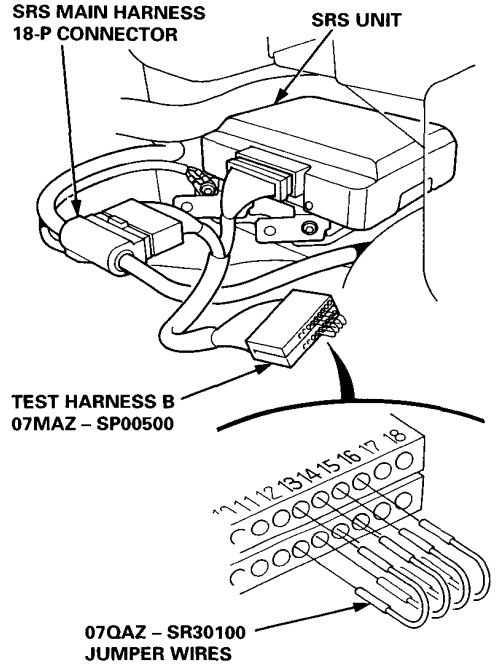

Check for an open in the SRS main harness:

1. Turn the ignition switch OFF.
2. Check for continuity between terminals No. B1 and No. B7 of Test Harness B.

Is there continuity?

YES — NO

Open in the SRS main harness; replace the harness.

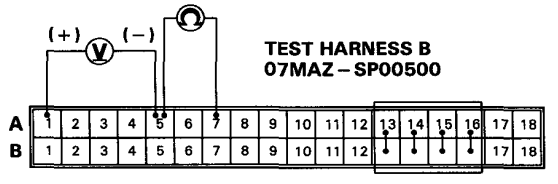

The problem has disappeared due to disconnecting and connecting the connectors. Be sure all terminals make good contact, and recheck the system (see Troubleshooting of Intermittent Failures on page 23-41).

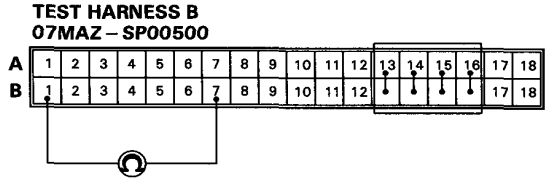

DTC 1-2

***CAUTION:* Whenever the ignition switch is ON (II), or *has been turned OFF for less than three minutes,* be careful not to bump the SRS unit; the airbags could accidentally deploy and cause damage or injuries.**

Check for a short to another wire in the driver's airbag inflator:
1. Turn the ignition switch OFF.
2. Disconnect the battery negative cable, then disconnect *the positive cable, and wait for three minutes.*
3. Connect the short connector (RED) to the driver's airbag connector.
   CAUTION:
   - **Do not connect short connector A to the cable reel 3-P connector.**
   - **Do not disconnect the passenger's airbag connector.**
4. Connect the SCS short connector to the service check connector (2-P).
5. Reconnect the battery positive cable, then connect the negative cable.
6. Turn the ignition switch ON (II), and record the most recent DTC.

Is DTC 1-2 or DTC 1-1 indicated?

1-2 — 1-1

Short in the driver's airbag inflator; replace the driver's airbag assembly (see page 23-68).

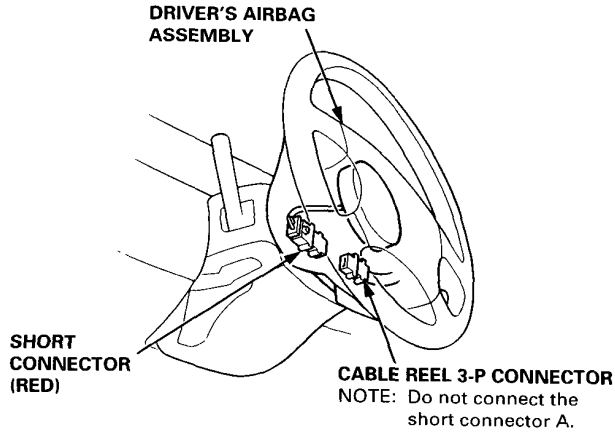

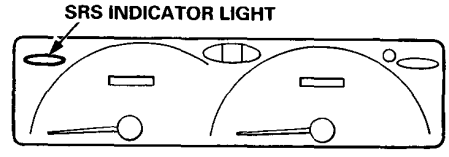

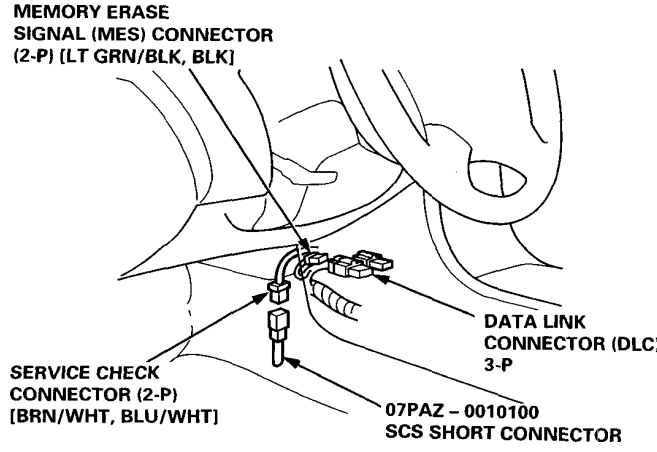

Check for a short in the cable reel:
1. Turn the ignition switch OFF.
   NOTE: Do not disconnect the SCS short connector.
2. Remove the dashboard lower cover, and disconnect the SRS main harness 6-P connector from the cable reel.
3. Turn the ignition switch ON (II), and record the most recent DTC.

Is DTC 1-2 or DTC 1-1 indicated?

1-2 — 1-1

Short in the cable reel; replace the cable reel (see page 23-74).

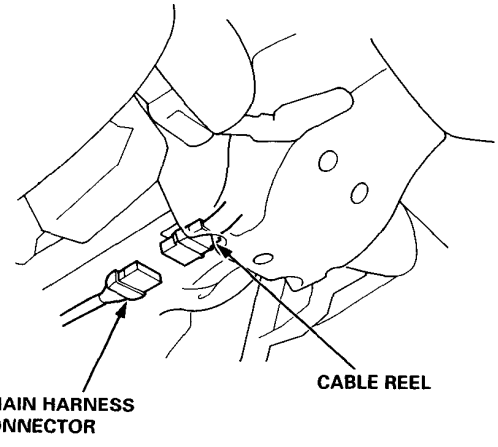

To page 23-55

From page 23-54

Connect Test Harness B:
1. Turn the ignition switch OFF, and disconnect the SCS short connector.
2. Disconnect the battery negative cable, then disconnect the positive cable, and wait for three minutes.
3. Remove the glove box, and connect the short connector (RED) to the passenger's airbag 3-P connector.
4. Disconnect the SRS main harness 18-P connector from the SRS unit, and connect Test Harness B between the SRS unit and the 18-P connector.

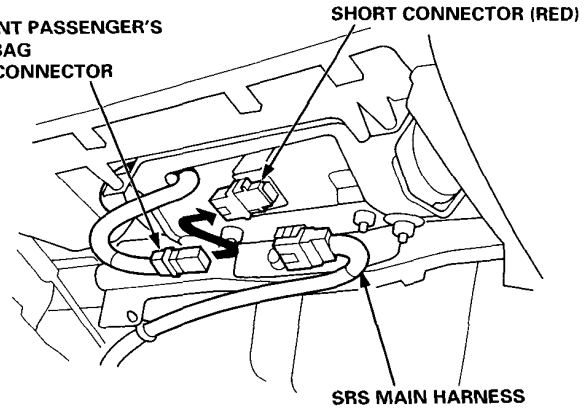

Check the SRS Unit:
1. Connect jumper wires, as shown, to the No. 13, 14, 15, and 16 terminals on rows A (SRS unit end) and B (SRS main harness end) of Test Harness B.
   NOTE: Do not connect jumper wires to the other terminals.
2. Connect the battery positive cable, then connect the negative cable.
3. Connect a voltmeter between the No. A1 (+) and A5 (–) terminals of Test Harness B.
4. Turn the ignition switch ON (II), and measure voltage. There should be 9.4 – 14 V.
5. Connect the voltmeter between the No. A7 (+) and A5 (–) terminals of Test Harness B, and measure voltage. There should be 0.5 V or less.

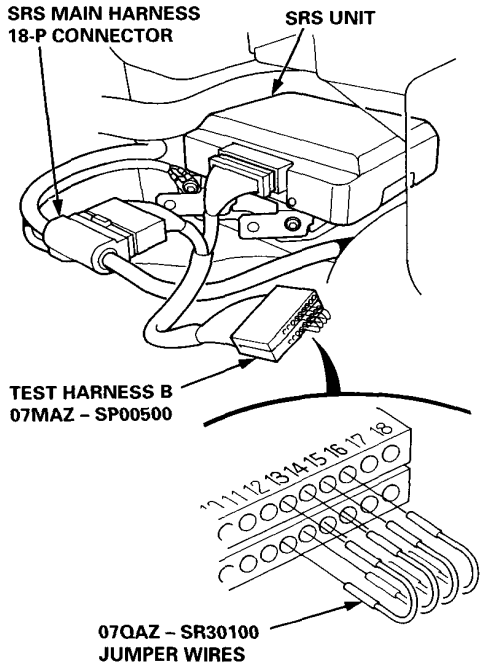

Are the voltages as specified?

YES — NO

Faulty SRS unit; replace the unit (see page 23-78).

Check for a short in the SRS main harness:
1. Turn the ignition switch OFF.
2. Check for continuity between the No. B1 and B7 terminals of Test Harness B.
   NOTE: Do not connect the cable reel 6-P connector.

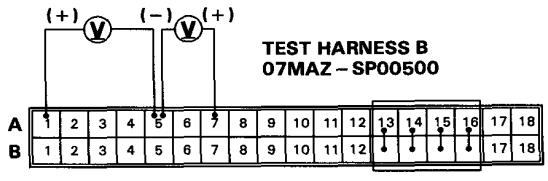

Is there continuity?

YES — NO

Short in the SRS main harness; replace the SRS main harness.

The problem has disappeared due to disconnecting and connecting the connectors. Be sure all terminals make good contact, and recheck the system (see Troubleshooting of Intermittent Failures on page 23-41).

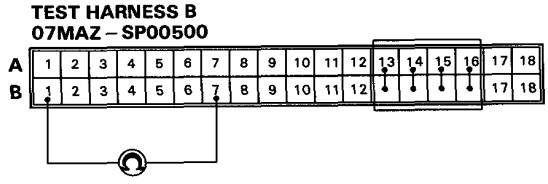

DTC 1-3

CAUTION: Whenever the ignition switch is ON (II), or has been turned OFF for less than three minutes, be careful not to bump the SRS unit; the airbags could accidentally deploy and cause damage or injuries.

Check for a short to power in the driver's airbag inflator:
1. Turn the ignition switch OFF.
2. Disconnect the battery negative cable, then disconnect the positive cable, and wait for three minutes.
3. Connect the short connector (RED) to the driver's airbag connector.
4. Connect SRS short connector A to the cable reel 3-P connector.
   CAUTION: Do not disconnect the passenger's airbag connector.
5. Connect the SCS short connector to the service check 2-P connector.
6. Reconnect the battery positive cable, then connect the negative cable.
7. Turn the ignition switch ON (II), and record the most recent DTC.

Is DTC 1-3 or DTC 1-2 indicated?

1-3

1-2

Short to power in the driver's airbag inflator; replace the driver's airbag assembly (see page 23-68).

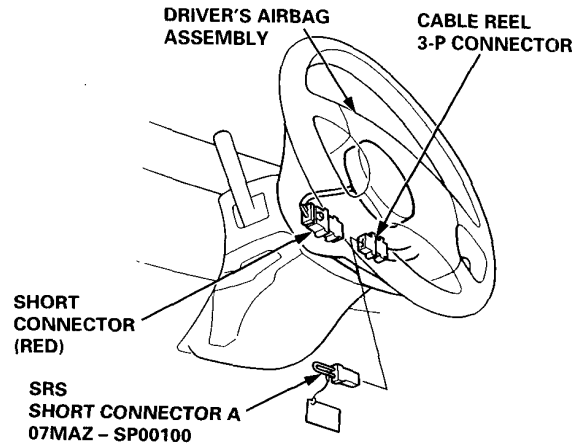

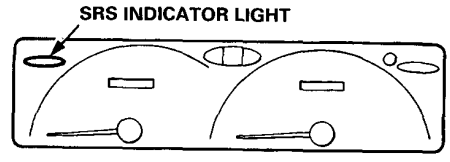

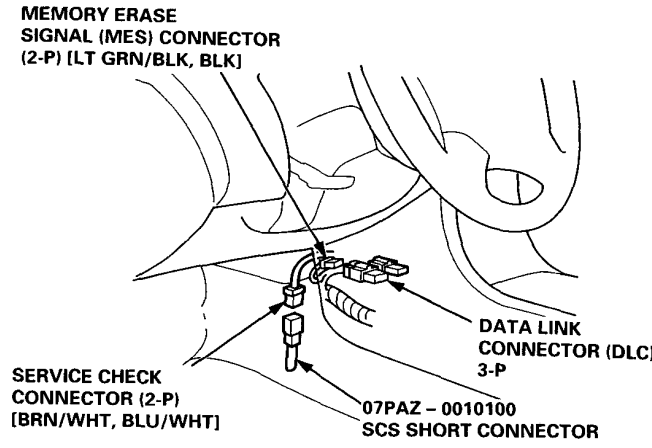

Connect Test Harness B:
1. Turn the ignition switch OFF, and disconnect the SCS short connector.
2. Disconnect the battery negative cable, then disconnect the positive cable, and wait for three minutes.
3. Remove the glove box, and connect the short connector (RED) to the passenger's airbag 3-P connector.
4. Disconnect the SRS main harness 18-P connector from the SRS unit, and connect Test Harness B between the SRS unit and the 18-P connector.

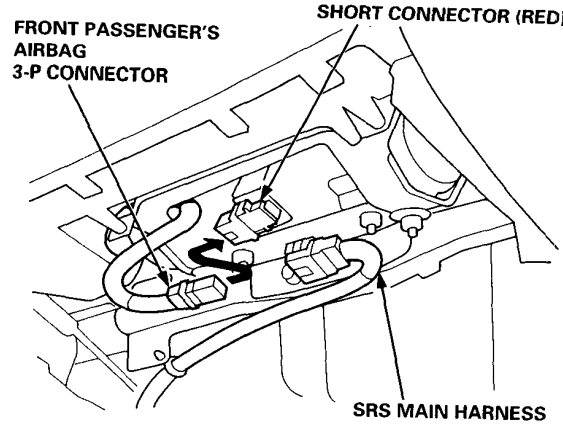

To page 23-57

From page 23-56

Check the SRS Unit:
1. Connect the battery positive cable, then connect the negative cable.
2. Connect a voltmeter between the No. B1 (+) and B5 (–) terminals.
   NOTE: Do not connect any jumper wires to Test Harness B.
3. Turn the ignition switch ON (II), and measure voltage. There should be 0.5 V or less.
4. Connect the voltmeter between the terminals No. B5 (–) and B7 (+), and measure voltage. There should be 0.5 V or less.

Are the voltages as specified?

YES — NO

Faulty SRS unit; replace the unit (see page 23-78).

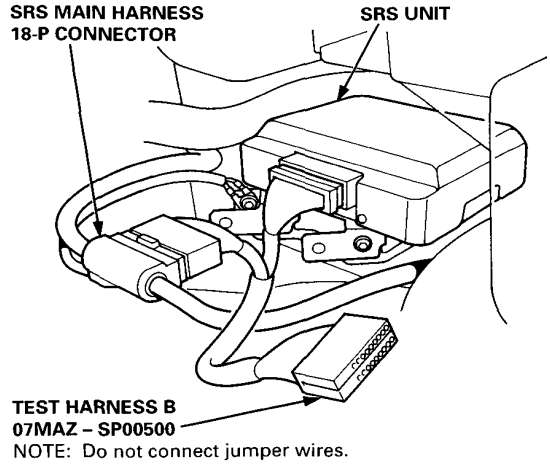

NOTE: Do not connect jumper wires.

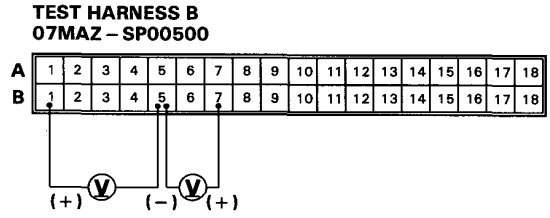

Connect Test Harness C, and check for a short to power in the cable reel:
1. Turn the ignition switch OFF.
2. Remove the dashboard lower cover, and disconnect the cable reel 6-P connector from the SRS main harness.
3. Connect Test Harness C to the cable reel 6-P connector.
4. Connect a voltmeter between the No. 4 (+) terminal of Test Harness C and ground.
5. Turn the ignition switch ON (II), and measure voltage. There should be 0.5 V or less.
6. Connect the voltmeter between the No. 5 (+) terminal and ground, and measure voltage. There should be 0.5 V or less.

Are voltages as specified?

YES — NO

Short to power in the cable reel; replace the cable reel (see page 23-74).

Short to power in the SRS main harness; replace the harness.

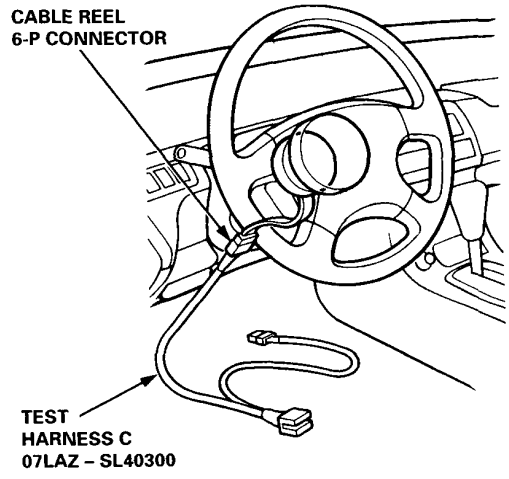

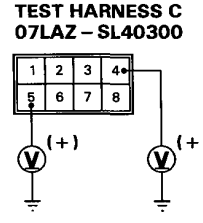

DTC 1-4

CAUTION: Whenever the ignition switch is ON (II), or has been turned OFF for less than three minutes, be careful not to bump the SRS unit; the airbags could accidentally deploy and cause damage or injuries.

Check for a short to ground in the driver's airbag inflator:
1. Turn the ignition switch OFF.
2. Disconnect the battery negative cable, then disconnect the positive cable, and wait for three minutes.
3. Connect the short connector (RED) to the driver's airbag connector.
4. Connect SRS short connector A to the cable reel 3-P connector.
   CAUTION: Do not disconnect the passenger's airbag connector.
5. Connect the SCS short connector to the service check connector.
6. Reconnect the battery positive cable, then connect the negative cable.
7. Turn the ignition switch ON (II), and record the most recent DTC.

Is DTC 1-4 or DTC 1-2 indicated?

1-4

1-2

Short to ground in the driver's airbag inflator; replace the driver's airbag assembly (see page 23-68).

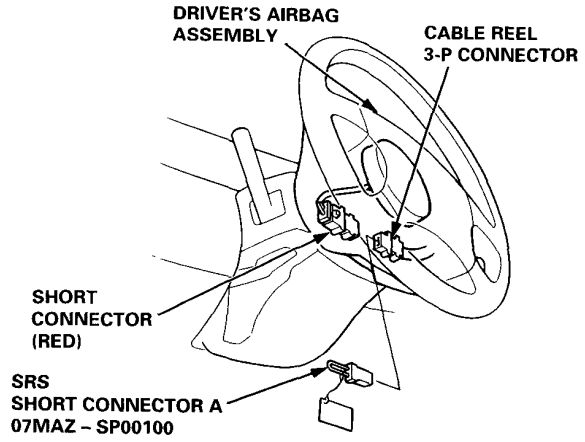

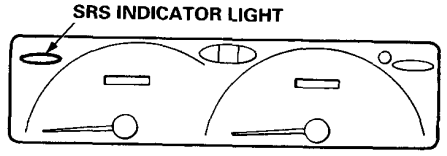

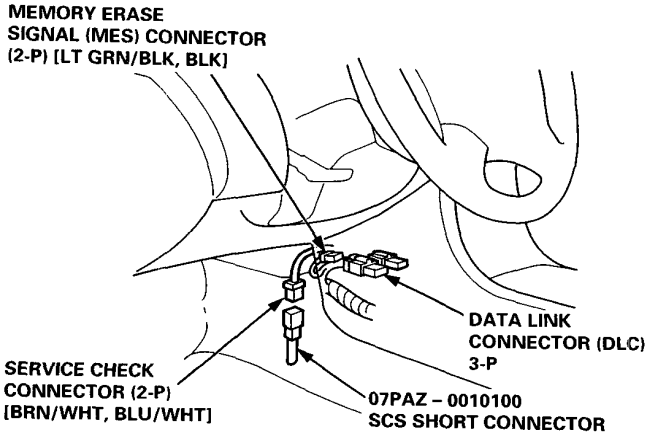

Connect Test Harness B:
1. Turn the ignition switch OFF, and disconnect the SCS short connector.
2. Disconnect the battery negative cable, then disconnect the positive cable, and wait for three minutes.
3. Remove the glove box, and connect the short connector (RED) to the passenger's airbag connector.
4. Disconnect the SRS main harness 18-P connector from the SRS unit, and connect Test Harness B between the SRS unit and the 18-P connector.

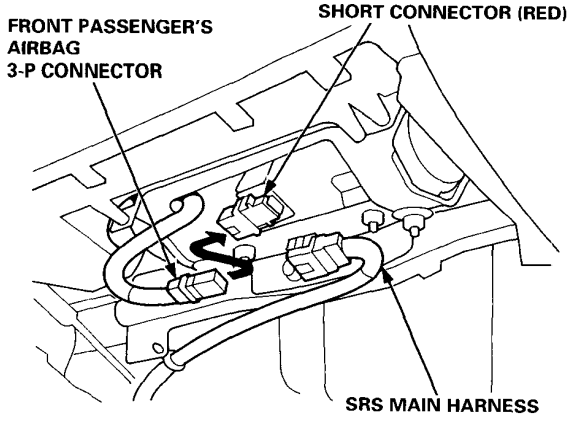

To page 23-59

From page 23-58

Check the SRS Unit:
1. Connect jumper wires to the No. 13, 14, 15, and 16 terminals on rows A (SRS unit end) and B (SRS main harness end) of Test Harness B.
   NOTE: Do not connect jumper wires to the other terminals.
2. Connect the battery positive cable, then connect the negative cable.
3. Connect a voltmeter between the No. A1 (+) and A5 (–) terminals of Test Harness B.
4. Turn the ignition switch ON (II), and measure voltage. There should be 9.4 – 14 V.
5. Turn the ignition OFF, and measure resistance between the No. A7 and A5 terminals. There should be 0.75 – 1.0 kΩ.
   NOTE: The resistance will be unstable if you measure immediately after you turn the ignition switch OFF. Allow it to settle, then take the reading.

Are voltage and resistance as specified?

YES — NO

Faulty SRS unit; replace the unit (see page 23-78).

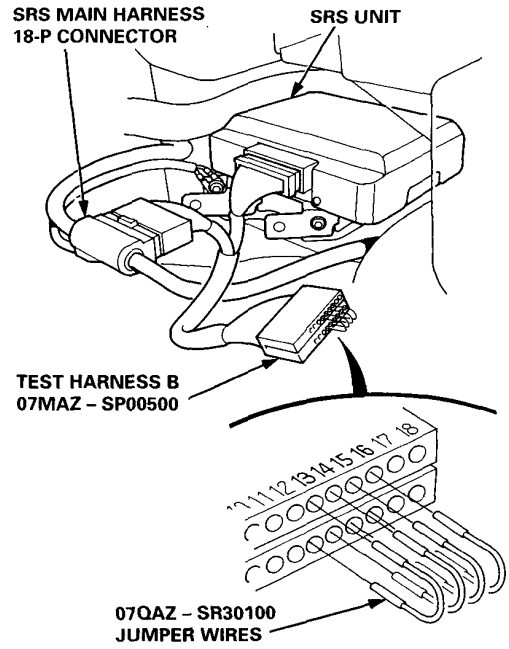

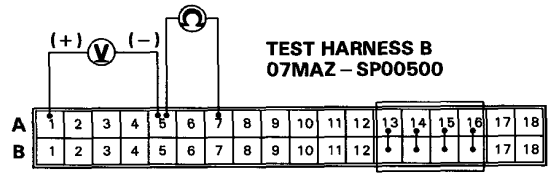

Connect Test Harness C, and check for a short to ground in the cable reel:
1. Turn the ignition switch OFF.
2. Remove the dashboard lower cover, and disconnect the cable reel 6-P connector from the SRS main harness.
3. Connect Test Harness C to the cable reel 6-P connector.
4. Check for continuity between the No. 4 terminal of Test Harness C and ground, and between the No. 5 terminal of Test Harness C and ground.

Is there continuity?

YES — NO

Short to ground in the cable reel; replace the cable reel (see page 23-74).

To page 23-60

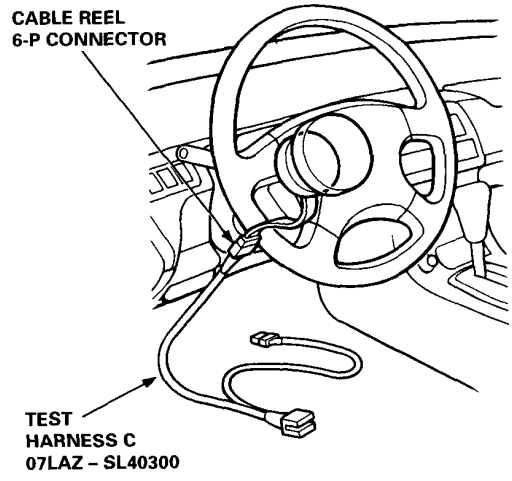

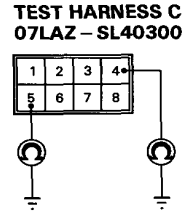

(cont'd)

DTC 1-4 (cont'd)

From page 23-59

Check for a short to ground in the SRS main harness:
1. Disconnect Test Harness C from the cable reel 6-P connector, and reconnect the cable reel 6-P connector to the SRS main harness.
2. Check for continuity between the No. B1 and B5 terminals, and the No. B5 and B7 terminals of Test Harness B.
   CAUTION:
   - **Make sure the ignition is turned OFF.**
   - ***Do not disconnect the SRS short connector A from the cable reel 3-P connector.***

Is there continuity?

YES

Short to ground in the SRS main harness; replace the harness.

NO

The problem has disappeared due to disconnecting and connecting the connectors. Be sure all terminals make good contact, and recheck the system (see Troubleshooting of Intermittent Failures on page 23-41).

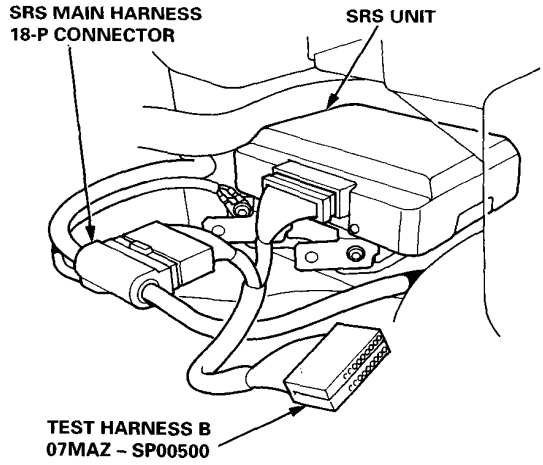

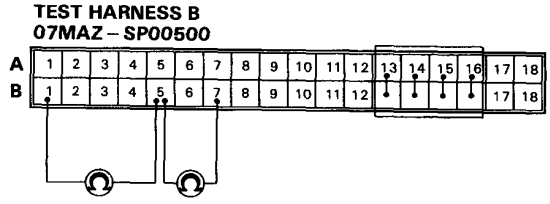

DTC 2-1

CAUTION: Whenever the ignition switch is ON (II), or has been turned OFF for less than three minutes, be careful not to bump the SRS unit; the airbags could accidentally deploy and cause damage or injuries.

Check for an open in the passenger's airbag inflator:
1. Turn the ignition switch OFF.
2. Disconnect the battery negative cable, then disconnect the positive cable, and wait for three minutes.
3. Connect the short connector (RED) to the passenger's airbag connector.
4. Connect the SRS short connector A to the SRS main harness 3-P connector.
   CAUTION: Do not disconnect the driver's airbag connector.
5. Connect the SCS short connector to the service check connector.
6. Reconnect the battery positive cable, then connect the negative cable.
7. Turn the ignition switch ON (II), and record the most recent DTC.

Is DTC 2-1 or DTC 2-2 indicated?

2-1 — 2-2

Open in the passenger's airbag inflator; replace the passenger's airbag assembly (see page 23-68).

Connect Test Harness B:
1. Turn the ignition switch OFF, and remove the SCS short connector.
2. Disconnect the battery negative cable, then disconnect the positive cable, and wait for three minutes.
3. Connect the short connector (RED) to the driver's airbag connector.
4. Disconnect the SRS main harness 18-P connector from the SRS unit, and connect Test Harness B between the SRS unit and the 18-P connector.
5. Connect jumper wires to the No. 13, 14, 15, and 16 terminals on rows A (SRS unit end) and B (SRS main harness end) of Test Harness B.
   NOTE: Do not connect jumper wires to the other terminals.

To page 23-62

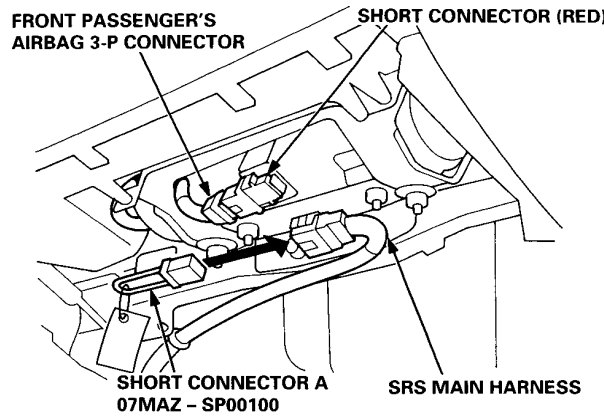

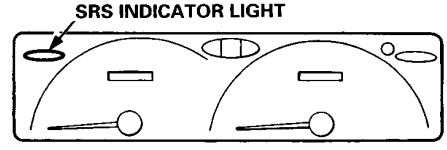

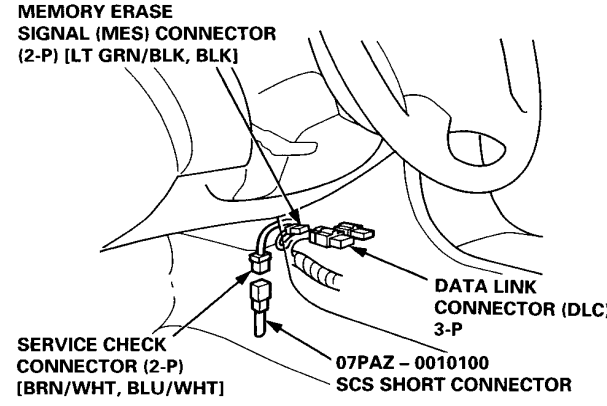

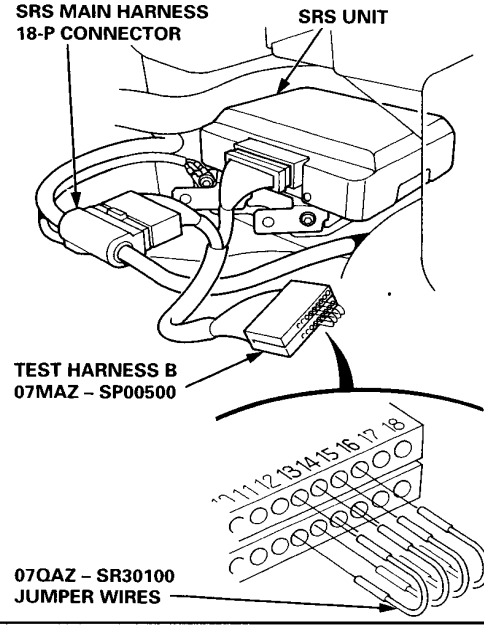

(cont'd)

DTC 2-1 (cont'd)

From page 23-61

Check the SRS unit:
1. Connect the battery positive cable, then connect the negative cable.
2. Connect a voltmeter between terminals No. A2 (+) and A5 (–) of Test Harness B.
3. Turn the ignition switch ON (II), and measure voltage. There should be 9.4 – 14 V.
4. Turn the ignition switch OFF, and measure resistance between terminals No. A8 and A5. There should be 0.75 – 1.0 kΩ.
   NOTE: The resistance will be unstable if you measure immediately after you turn the ignition switch OFF. Allow it to settle, then take the reading.

Are voltage and resistance as specified?

YES

NO

Faulty SRS unit; replace the SRS unit (see page 23-78).

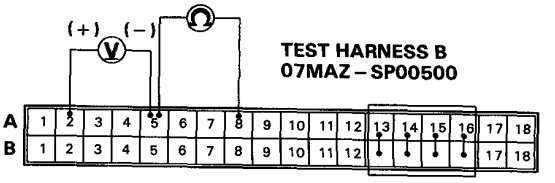

Check for an open in the SRS main harness:
1. Turn the ignition switch OFF.
2. Check for continuity between terminals No. B2 and B8 of Test Harness B.
   CAUTION: Do not disconnect SRS short connector A from the SRS main harness.

Is there continuity?

YES

NO

Open in the SRS main harness; replace the harness.

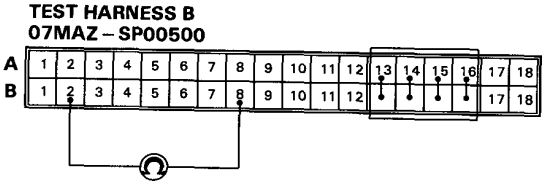

The problem has disappeared due to disconnecting and connecting the connectors. Be sure all terminals make good contact, and recheck the system (see Troubleshooting of Intermittent Failures on page 23-41).

DTC 2-2

CAUTION: Whenever the ignition switch is ON (II), or has been turned OFF for less than three minutes, be careful not to bump the SRS unit; the airbags could accidentally deploy and cause damage or injuries.

Check for a short to another wire in the passenger's airbag inflator:
1. Turn the ignition switch OFF.
2. Disconnect the battery negative cable, then disconnect the positive cable, and wait for three minutes.
3. Connect the short connector (RED) to the passenger's airbag connector.
   CAUTION:
   - **Do not connect short connector A to the SRS main harness connector.**
   - **Do not disconnect the driver's airbag connector.**
4. Connect the SCS short connector to the service check connector.
5. Reconnect the battery positive cable, then connect the negative cable.
6. Turn the ignition switch ON (II), and record the most recent DTC.

Is DTC 2-2 or DTC 2-1 indicated?

2-2

Short to another wire in the passenger's airbag inflator; replace the passenger's airbag assembly (see page 23-68).

2-1

Connect Test Harness B:
1. Turn the ignition switch OFF, and disconnect the SCS short connector.
2. Disconnect the battery negative cable, then disconnect the positive cable, and wait for three minutes.
3. Connect the short connector (RED) to the driver's airbag connector.
4. Disconnect the SRS main harness 18-P connector from the SRS unit.
5. Connect Test Harness B between the SRS unit and the 18-P connector.
6. Connect the No. 13, 14, 15, and 16 terminals on rows A (SRS unit end) and B (SRS main harness end) of Test Harness B with jumper wires.
   NOTE: Do not connect jumper wires to the other terminals.

To page 23-64

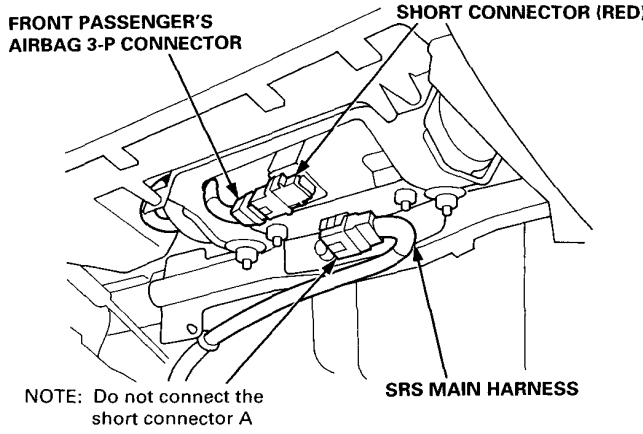

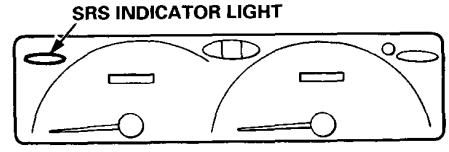

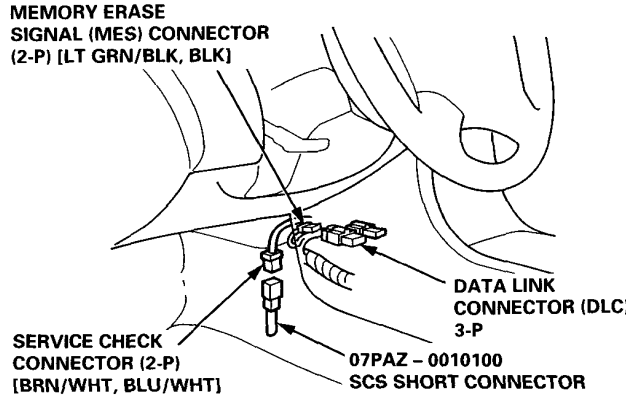

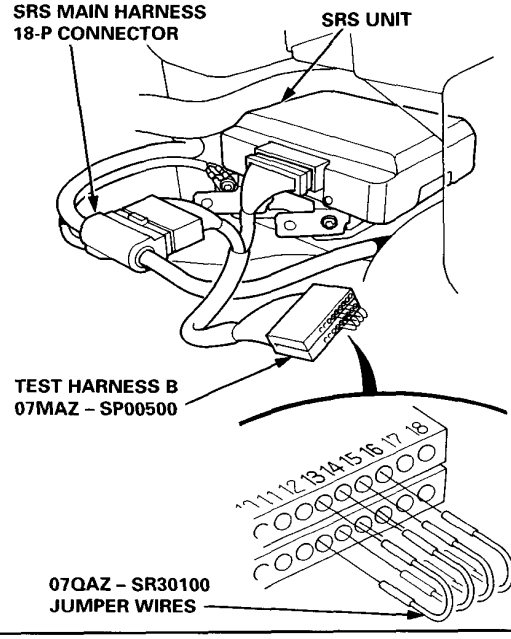

(cont'd)

DTC 2-2 (cont'd)

From page 23-63

Check the SRS unit:
1. Connect the battery positive cable, then connect the negative cable.
2. Connect a voltmeter between the No. A2 (+) and A5 (–) terminals of Test Harness B.
3. Turn the ignition switch ON (II), and measure voltage. There should be 9.4 – 14 V.
4. Connect the voltmeter between the No. A8 (+) and A5 (–) terminals of Test Harness B, and measure voltage. There should be 0.5 V or less.

Are voltages as specified?

YES

NO

Faulty SRS unit; replace the SRS unit (see page 23-78).

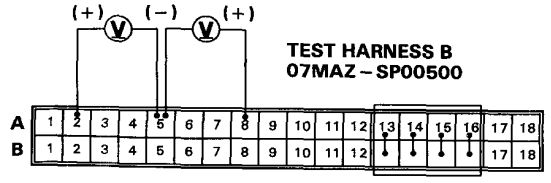

Check for short to another wire in the SRS main harness:
1. Turn the ignition switch OFF.
2. Check for continuity between the No. B2 and B8 terminals of Test Harness B.

Is there continuity?

YES

NO

Short in the SRS main harness; replace the harness.

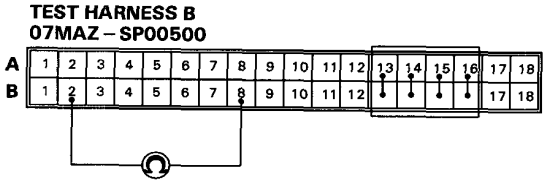

***The problem has disappeared due to disconnecting and* connecting the connectors. Be sure all terminals make good contact, and recheck the system (see Troubleshooting of Intermittent Failures on page 23-41).**

DTC 2-3

CAUTION: Whenever the ignition switch is ON (II), or has been turned OFF for less than three minutes, be careful not to bump the SRS unit; the airbags could accidentally deploy and cause damage or injuries.

Check for short to power in the passenger's airbag inflator:
1. Turn the ignition switch OFF.
2. Disconnect the battery negative cable, then disconnect the positive cable, and wait for three minutes.
3. Connect the short connector (RED) to the passenger's airbag connector.
4. Connect SRS short connector A to the SRS main harness 3-P connector.
   CAUTION: Do not disconnect the driver's airbag connector.
5. Connect the SCS short connector to the service check connector.
6. Reconnect the battery positive cable, then connect the negative cable.
7. Turn the ignition switch ON (II), and record the most recent DTC.

Is DTC 2-3 or DTC 2-2 indicated?

2-3 — 2-2

Short to power in the passenger's airbag inflator; replace the passenger's airbag assembly (see page 23-68).

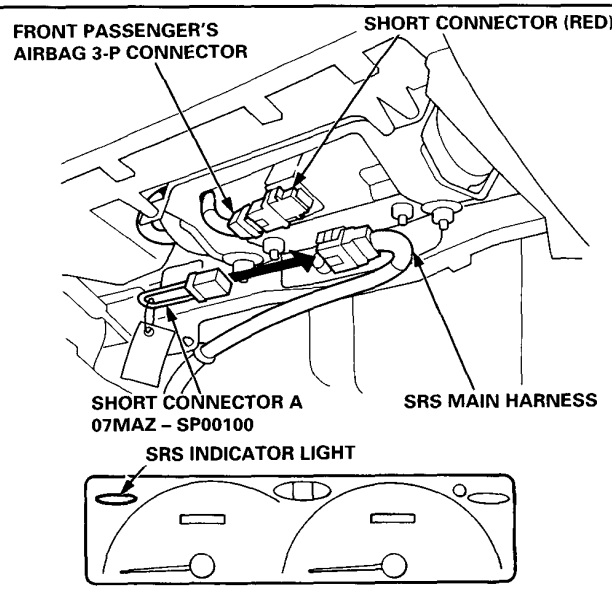

Connect Test Harness B:
1. Turn the ignition switch OFF, and disconnect the SCS short connector.
2. Disconnect the battery negative cable, then disconnect the positive cable, and wait for three minutes.
3. Connect the short connector (RED) to the driver's airbag connector.
4. Disconnect the SRS main harness 18-P connector from the SRS unit, and connect Test Harness B between the SRS unit and the 18-P connector.
5. Reconnect the battery positive cable, then connect the negative cable.
6. Connect a voltmeter between the No. B2 (+) and B5 (–) terminals of Test Harness B.
7. Turn the ignition switch ON (II), and measure voltage. There should be 0.5 V or less
8. Connect the voltmeter between the No. B8 (+) and B5 (–) terminals of Test Harness B, and measure voltage. There should be 0.5 V or less.

Are voltages as specified?

YES — NO

Short to power in the SRS main harness; replace the harness.

Faulty SRS unit; replace the SRS unit (see page 23-78).

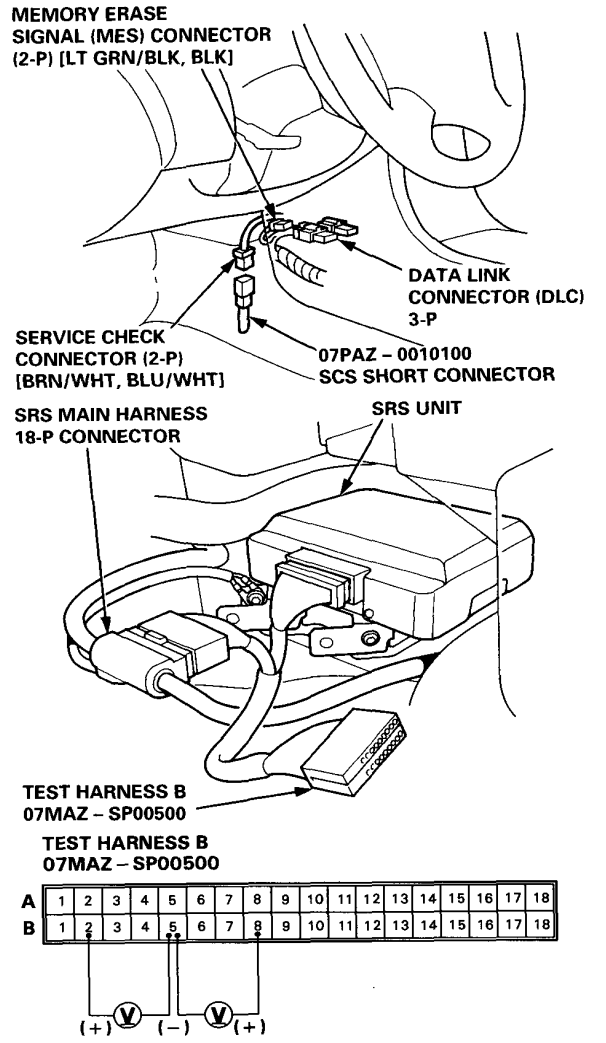

DTC 2-4

CAUTION: Whenever the ignition switch is ON (II), or has been turned OFF for less than three minutes, be careful not to bump the SRS unit; the airbags could accidentally deploy and cause damage or injuries.

Check for a short to ground in the passenger's airbag inflator:
1. Turn the ignition switch OFF.
2. Disconnect the battery negative cable, then disconnect the positive cable, and wait for three minutes.
3. Connect the short connector (RED) to the passenger's airbag connector.
4. Connect SRS short connector A to the SRS main harness 3-P connector.
   CAUTION: Do not disconnect the driver's airbag connector.
5. Connect the SCS short connector to the service check connector.
6. Reconnect the battery positive cable, then connect the negative cable.
7. Turn the ignition switch ON (II), and record the most recent DTC.

Is DTC 2-4 or DTC 2-2 indicated?

2-4

2-2

Short to ground in the passenger's airbag inflator; replace the passenger's airbag assembly (see page 23-68).

Connect Test Harness B:
1. Turn the ignition switch OFF, and disconnect the SCS short connector.
2. Disconnect the battery negative cable, then disconnect the positive cable, and wait for three minutes.
3. Connect the short connector (RED) to the driver's airbag connector.
4. Disconnect the SRS main harness 18-P connector from the SRS unit, and connect Test Harness B between the SRS unit and the 18-P connector.
5. Connect the No. 13, 14, 15, and 16 terminals on rows A (SRS unit end) and B (SRS main harness end) of Test Harness B with jumper wires.
   NOTE: *Do not connect jumper wires to the other terminals.*

To page 23-67

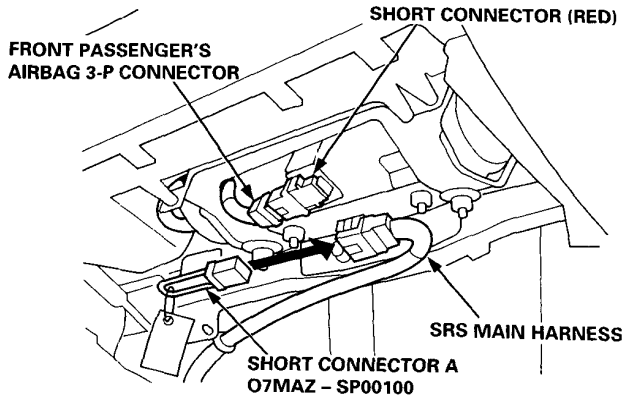

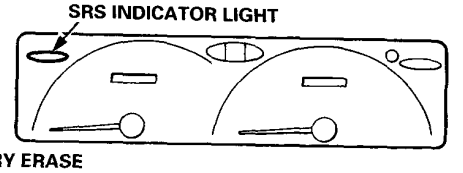

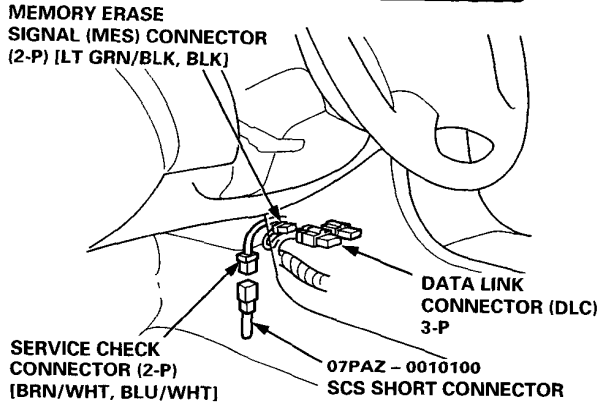

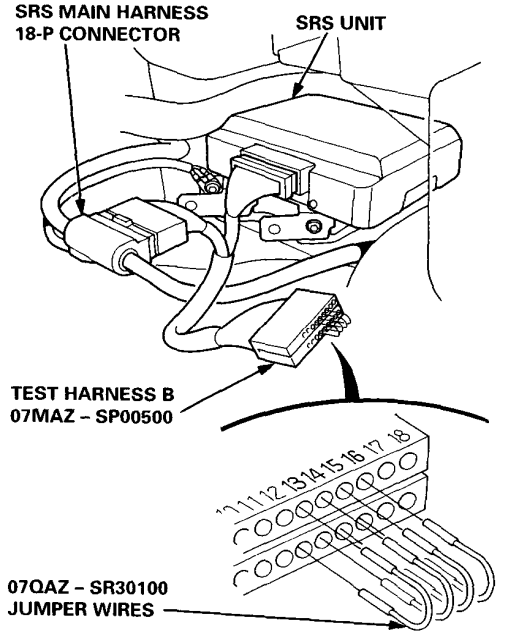

From page 23-66

Check the SRS unit:
1. Reconnect the battery positive cable, then connect the negative cable.
2. Connect a voltmeter between the No. A2 (+) and A5 (–) terminals of Test Harness B.
3. Turn the ignition switch ON (II), and measure voltage. There should be 9.4 – 14 V.
4. Turn the ignition switch OFF, and measure resistance between the No. A8 and A5 terminals of Test Harness B. There should be 0.75 – 1.0 kΩ
   NOTE: The resistance will be unstable if you measure immediately after you turn the ignition switch OFF. Allow it to settle, then take the reading.

Are voltage and resistance as specified?

YES

NO

Faulty SRS unit; replace the SRS unit (see page 23-78).

Check for short to ground in the SRS main harness:
1. Check for continuity between the No. B2 and B5 terminals, and the No. B8 and B5 terminals of Test Harness B.
   CAUTION: Do not disconnect short connector A from the SRS main harness 3-P connector.

Is there continuity?

YES

NO

Short to ground in the SRS main harness; replace the harness.

The problem has disappeared due to disconnecting and connecting the connectors. Be sure all terminals make good contact, and recheck the system (see Troubleshooting of Intermittent Failures on page 23-41).

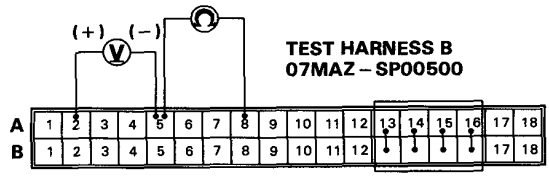

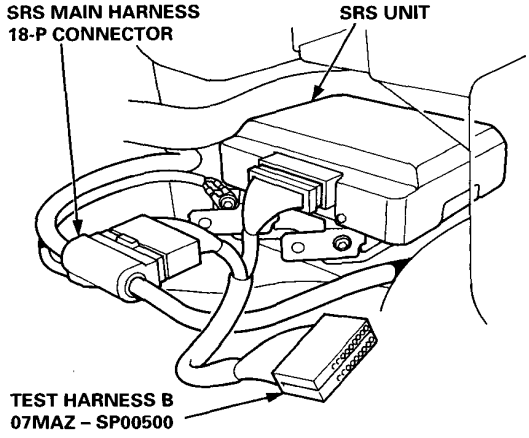

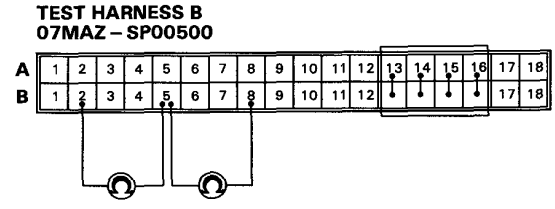

Airbag Assembly

Replacement

⚠ WARNING Store a removed airbag assembly with the pad surface up. If the airbag is improperly stored face down, accidental deployment could propel the unit with enough force to cause serious injury.

CAUTION:

- **Do not install used SRS parts from another car. When repairing as SRS, use only new parts.**
- **Carefully inspect the airbag assembly before you install it. Do not install an airbag assembly that shows signs of being dropped or improperly handled, such as dents, cracks or deformation.**
- **Always keep the short connectors (RED) on the airbags when the harness is disconnected.**
- **Do not disassemble or tamper with the airbag assembly.**

1. Disconnect the battery negative cable, then disconnect the positive cable and wait at least three minutes.

2. Connect the short connectors (RED) to the airbag side of the connectors:

   Driver's Side:

   - Remove the access panel from the steering wheel, then remove the short connector (RED) from the panel.

   - Disconnect the 3-P connector between the driver's airbag and cable reel, then connect the short connector (RED) to the airbag side of the connector.

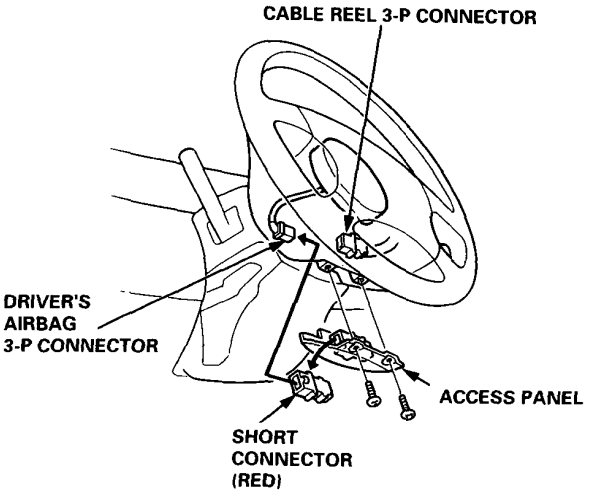

Front Passenger's Side:

- Remove the glove box.

- Disconnect the front passenger's airbag 3-P connector from the SRS main harness, and connect the short connector (RED) to the front passenger's airbag 3-P connector.

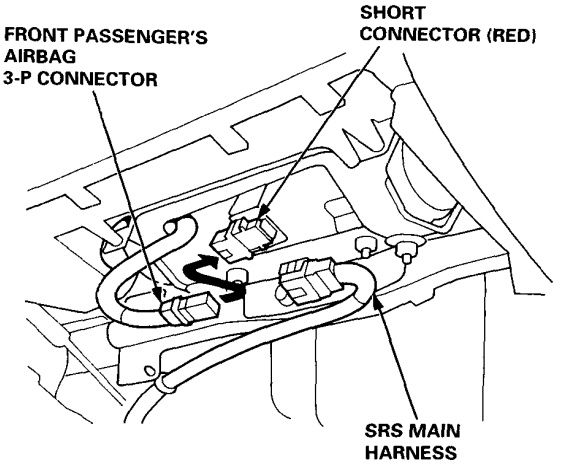

3. Remove the airbags:

Driver's Side:

- Remove the two TORX® bolts using a TORX® T30 bit, then remove the driver's airbag assembly.

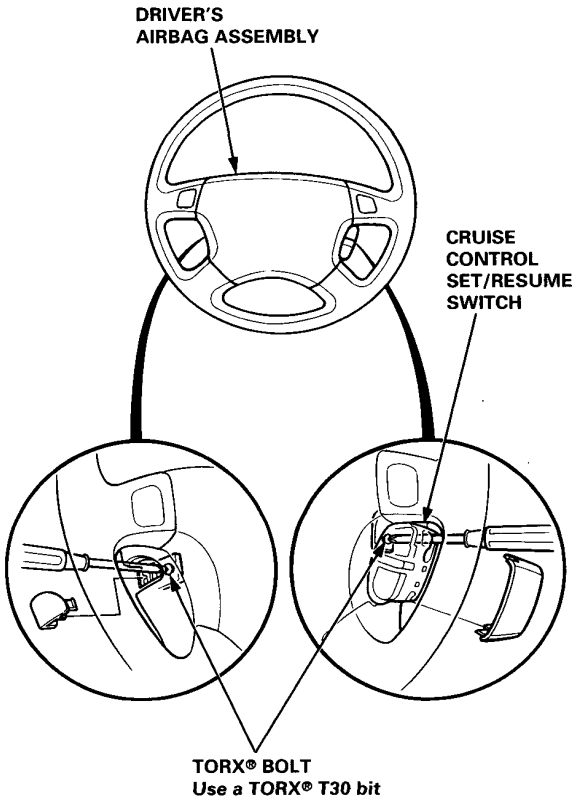

Front Passenger's Side:

- Remove the tweeter cover from the dashboard, then remove the visor and black face panel.
- Remove the glove box, then remove the four mounting nuts from the front passenger's airbag assembly.

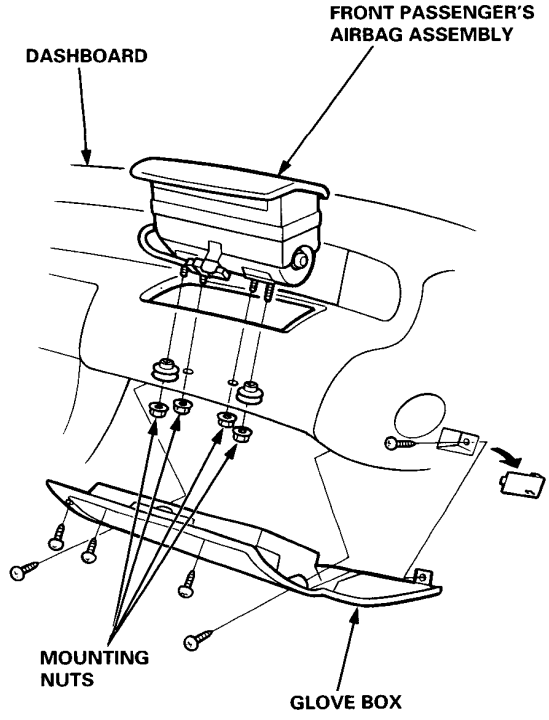

- Carefully lift the front passenger's airbag assembly out of the dashboard.

(cont'd)

Replacement (cont'd)

CAUTION: Be sure to install the SRS wiring so that it is not pinched or interfering with other car parts.

4. Install the new airbags.

Driver's Side: Place the driver's airbag assembly in the steering wheel, and secure it with new TORX® bolts.

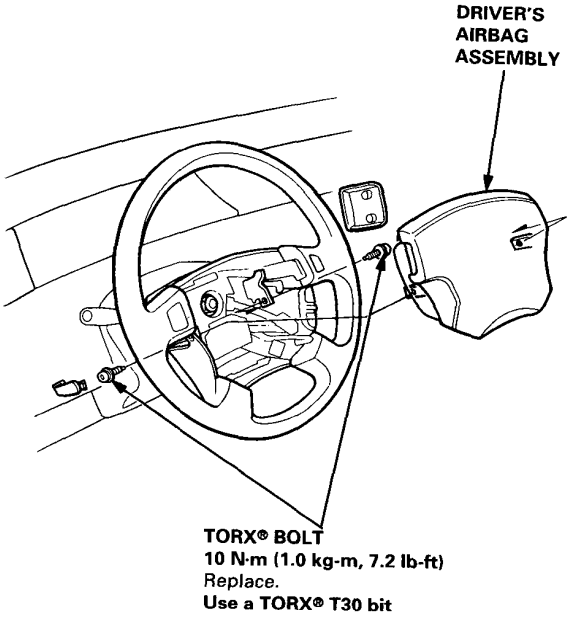

Front Passenger's Side:

- Place the front passenger's airbag assembly in the dashboard.
- Loosen the two mounting nuts on the L-bracket.
- Press the airbag assembly downwards and turn the adjusting nuts until they touch the lower part of the airbag assembly.
- Tighten the four airbag mounting nuts, then tighten the two mounting nuts on the L-bracket.

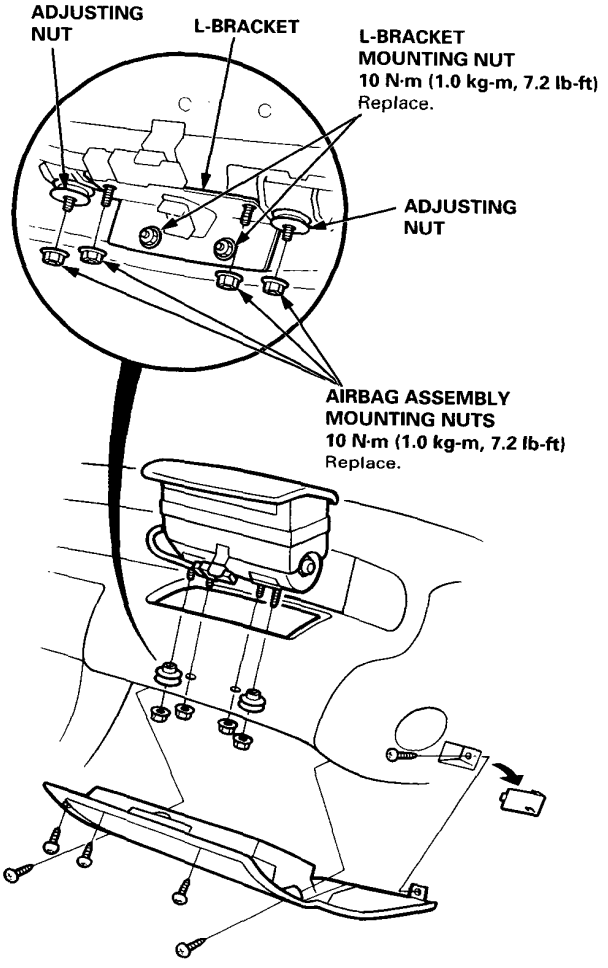

5. Remove and properly store the short connectors, then reconnect the airbag connectors.

Front Passenger's Side:

- Attach the SRS main harness 3-P connector to the connector holder.

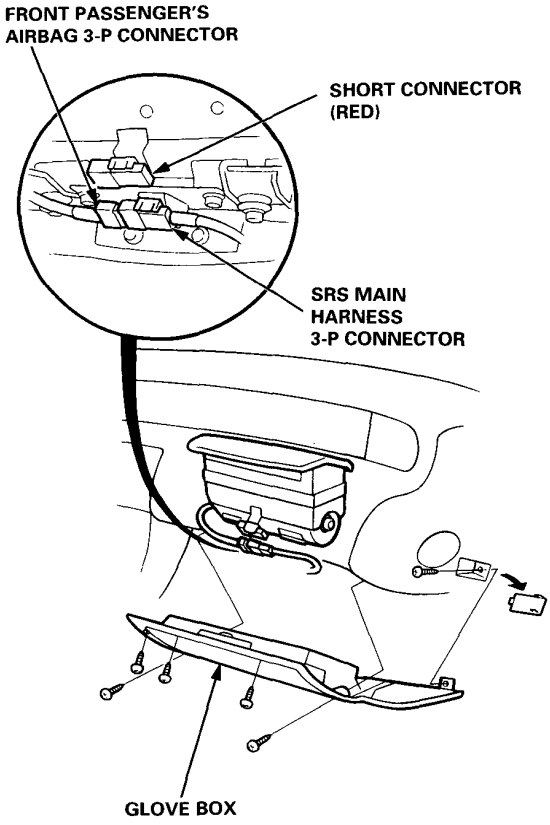

- Then reinstall the glove box, visor, and tweeter cover on the dashboard.

Driver's Side:

- Remove the short connector (RED) from the driver's airbag connector, then connect the airbag 3-P connector to the cable reel 3-P connector.

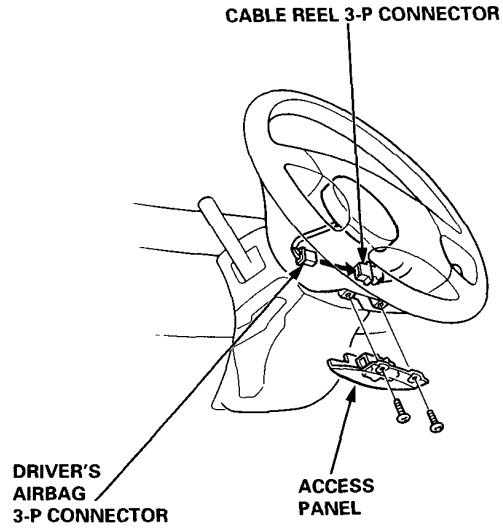

- Attach the short connector (RED) to the access panel, then reinstall the panel on the steering wheel.

6. Connect the battery positive cable, then the negative cable.

7. After installing the airbag assembly, confirm proper system operation:

- Turn the ignition switch ON (II): The instrument panel SRS indicator light should come on for about six seconds and then go off.
- Make sure both horn buttons work.
- Take a test drive and make sure the cruise control switches work.

Disposal

Before scrapping any airbags (including those in a whole car to be scrapped) the airbags must be deployed. If the car is still within the warranty period, before you deploy the airbags, the Honda District Service Manager must give approval and/or special instructions.
Only after the airbags have been deployed (as the result of vehicle collision, for example), can they be scrapped.
If the airbags appear intact (not deployed) treat them with extreme caution.
Follow this procedure:

Deploying the Airbags: In-Car

NOTE: If an SRS car is to be entirely scrapped, its airbags should be deployed while still in the car.
The airbags should not be considered as salvageable part and should never be installed in another car.

WARNING Confirm that the airbag assemblies are securely mounted; otherwise, severe personal injury could result during deployment.

1. Disconnect the battery negative cable, then disconnect the positive cable and wait at least three minutes.

2. Confirm that the special tool is functioning properly by following the check procedure on the tool box label, or on page 23-73.

Driver's Airbag:

3. Remove the access panel, then disconnect the 3-P connector between the driver's airbag and the cable reel.

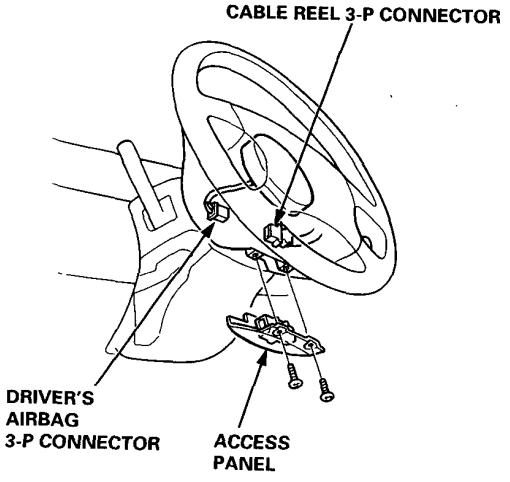

Front Passenger's Airbag:

4. Remove the glove box, then disconnect the 3-P connector between the front passenger's airbag and SRS main harness.

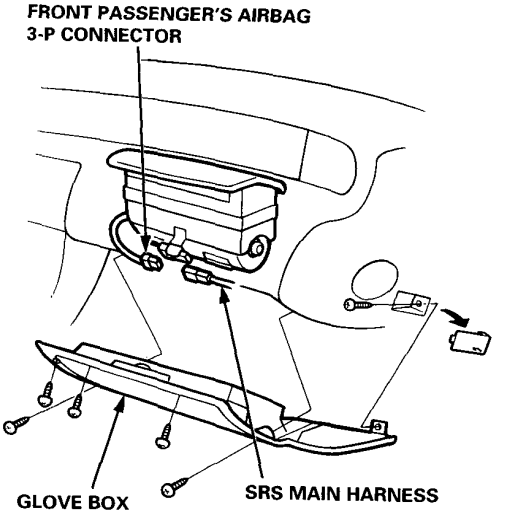

5. Cut off the airbag connector, strip the ends of the airbag wires, and connect the special tool alligator clips to the airbag. Place the special tool about 10 meters (thirty feet) away from the airbag.

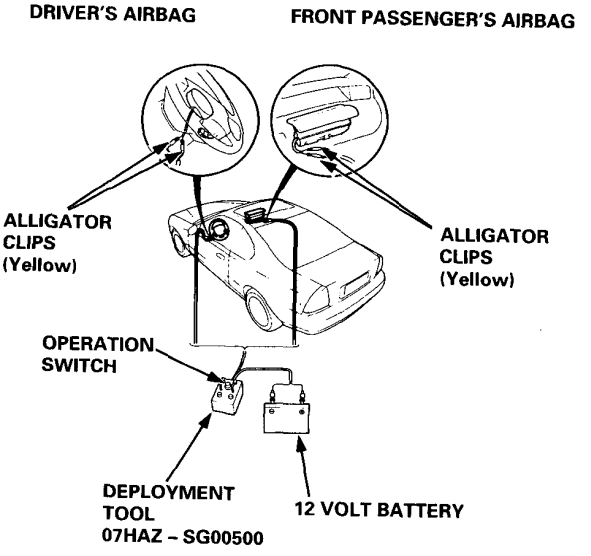

6. Connect a 12 volt battery to the tool:

   - If the green light on the tool comes on, the airbag igniter circuit is defective and cannot deploy the airbags. Go to Damaged Airbag Special Procedure.
   - If the red light on the tool comes on, the airbags are ready to be deployed.

7. Push the tool's deployment switch. The airbags should deploy (deployment is both highly audible and visible a loud noise and rapid inflation of the bag, followed by slow deflation).

   - If audible/visible deployment happens and the green light on the tool comes on, continue with this procedure.
   - If the airbags don't deploy, yet the green light comes on, the igniters are defective.
     Go to Damaged Airbag Special Procedure.

   ⚠ WARNING During deployment, the airbag assembly can become hot enough to burn you.
   Wait thirty minutes after deployment before touching the assembly.

8. Dispose of the complete airbag assembly. No part of it can be reused. Place it in a sturdy plastic bag and seal it securely.

   CAUTION:
   - **Wear a face shield and gloves when handling a deployed airbag.**
   - **Wash your hands and rinse them well with water after handling a deployed airbag.**

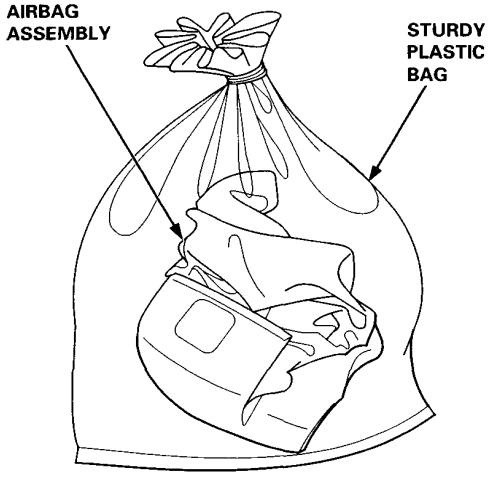

Deploying the Airbag: Out-of-car

NOTE: If an intact airbag assembly has been removed from a scrapped car or has been found defective or damaged during transit, storage, or service, it should be deployed as follows:

⚠ WARNING Position the airbag assembly face up, outdoors on flat ground, at least 10 meters (thirty feet) from any obstacles or people.

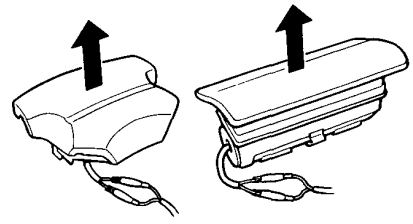

1. Confirm that the special tool is functioning properly by following the check procedure on this page or on the tool box label.

2. Remove the short connector from the airbag connector.

3. Follow steps 5, 6, 7 and 8 of the in-car deployment procedure.

Damaged Airbag Special Procedure

⚠ WARNING If an airbag cannot be deployed, it should not be treated as normal scrap; it should still be considered a potentially explosive device that can cause serious injury.

1. If installed in a car, follow the removal procedure on page 23-68.

2. In all cases, make sure a short connector is properly installed on the airbag connector.

3. Package the airbag in exactly the same packaging that the new replacement part came in.

4. Mark the outside of the box "DAMAGED AIRBAG NOT DEPLOYED" so it does not get confused with your parts stock.

5. Contact your Honda District Service Manager for how and where to return it for disposal.

Deployment Tool: Check Procedure

1. Connect the yellow clips to both switch protector handles on the tool; connect the tool to a battery.

2. Push the operation switch: green means tool is OK; red means tool is faulty.

3. Disconnect the battery and the yellow clips.

Cable Reel

Replacement

⚠WARNING Store a removed airbag assembly with the pad surface up. If the airbag is improperly stored face down, accidental deployment could propel the unit with enough force to cause serious injury.

CAUTION:

- **Carefully inspect the airbag assembly before installing it. Do not install an airbag assembly that shows signs of being dropped or improperly handled, such as dents, cracks or deformation.**
- **Always keep the short connectors on the airbags when the harness is disconnected.**
- **Do not disassemble or tamper with any airbag assembly.**

1. Disconnect the battery negative cable, then disconnect the positive cable and wait at least three minutes.
2. Make sure the wheels are facing straight ahead.
3. Remove the dashboard lower cover, and air duct.

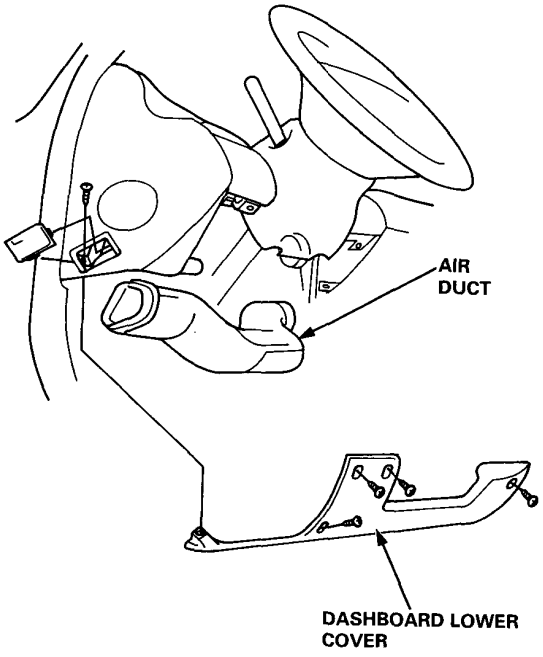

4. Connect the short connectors to the airbags.

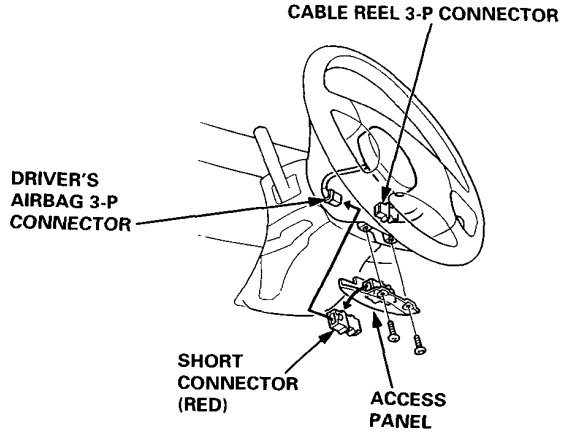

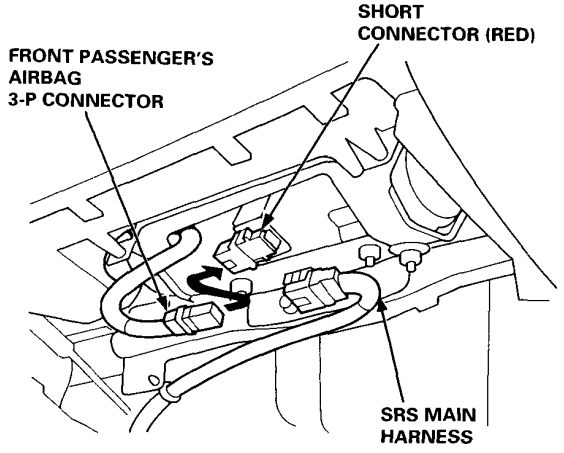

5. Remove the driver's airbag assembly from the steering wheel (two T30 TORX® bolts), then remove the steering wheel nut.

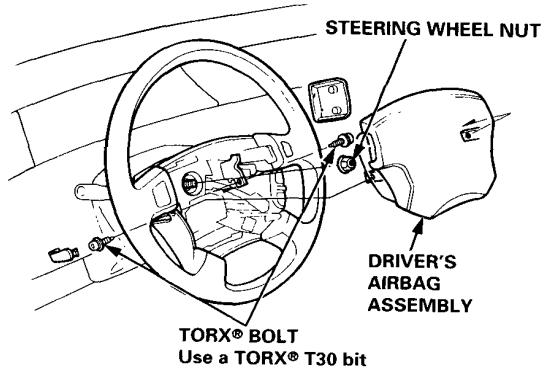

6. Disconnect the connectors from the horn and cruise control switch, then remove the cable reel 3-P connector from its clip.

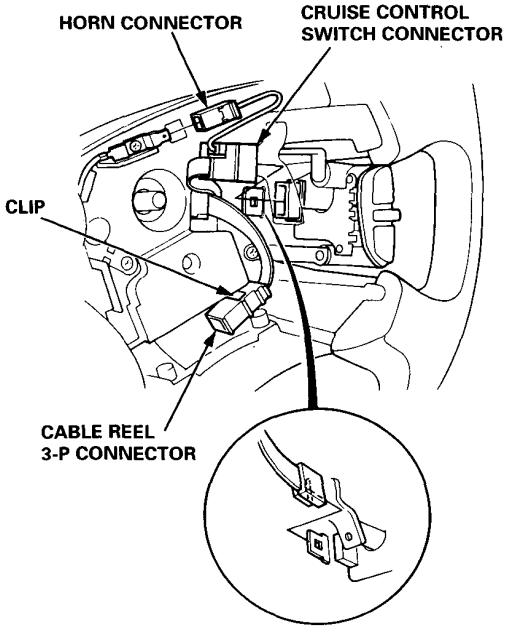

7. Remove the steering wheel from the column.

8. Remove the upper and lower column covers.

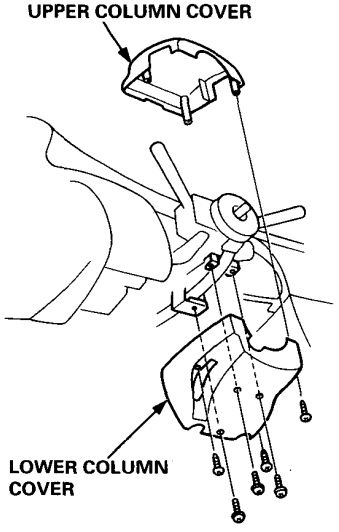

9. Disconnect the 6-P connector between the cable reel and SRS main harness, then remove the connector holder from the steering column.

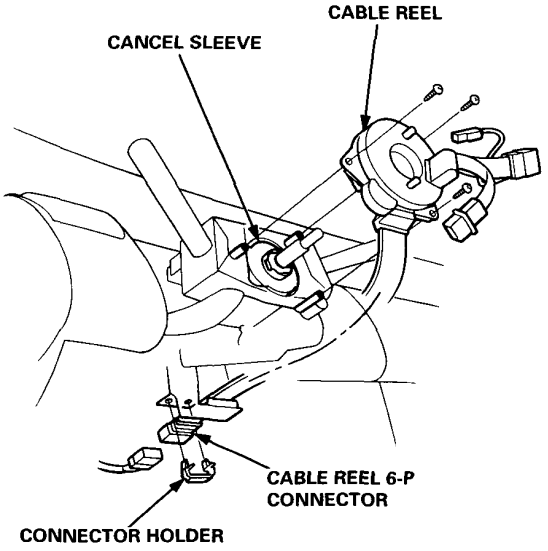

10. Remove the cable reel from the column.

(cont'd)

Replacement (cont'd)

CAUTION:
- **Before installing the steering wheel, the front wheels should be aligned straight ahead.**
- **Be sure to install the harness wires so that they are not pinched or interfering with other car parts.**
- **After reassembly, confirm that the wheels are still straight ahead and that the steering wheel spoke angle is correct (road test). If minor spoke angle adjustment is necessary, do so only by adjustment of the tie-rods, not by removing and repositioning the steering wheel.**

11. 2WS: Align the cancel sleeve grooves with the cable reel projections.

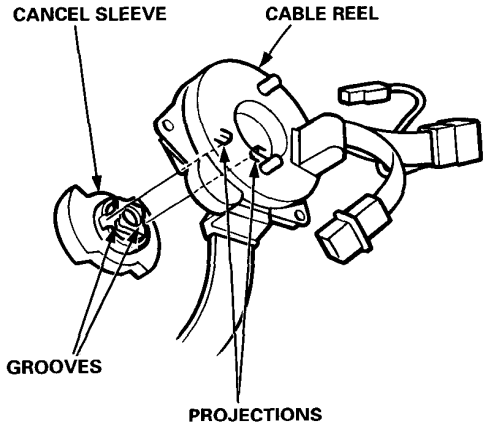

4WS: Be sure that the yellow mark on the front main steering angle sensor rotor faces downwards. If it doesn't, turn the rotor till it is in the neutral lock position.

12. Carefully install the cable reel on the steering column shaft. Then attach the connector holder to the steering column.

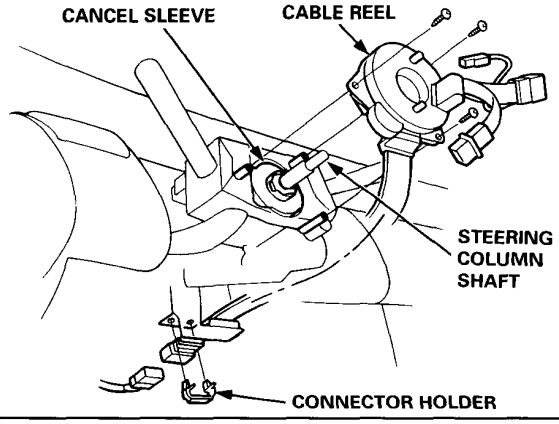

13. Install the steering column upper and lower covers.

14. Center the cable reel.
    Do this by first rotating the cable reel clockwise until it stops.
    Then rotate it counterclockwise (approximately two turns) until:
    - The yellow gear tooth lines up with the alignment mark on the cover.
    - The arrow mark on the cable reel label points straight up.

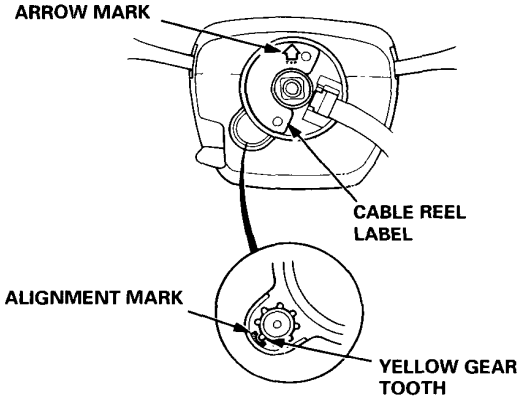

15. Install the steering wheel, and attach the cable reel 3-P connector to the clip.

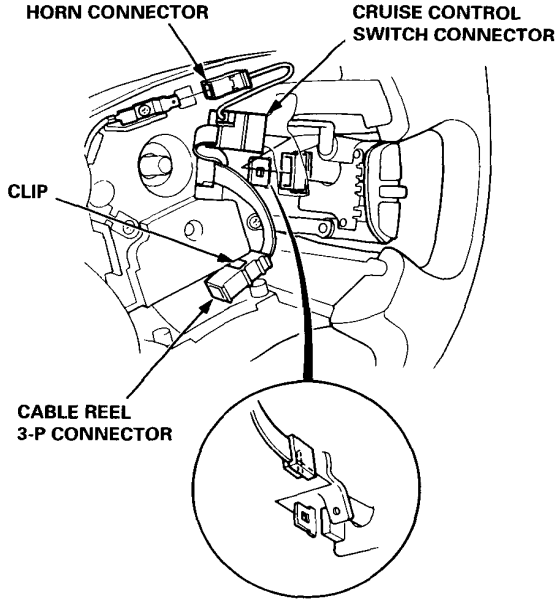

16. Connect the horn connector and cruise control switches connector.

17. Install the steering wheel nut.

    NOTE: Models with 4WS
    Check that the 4WS system is neutral.

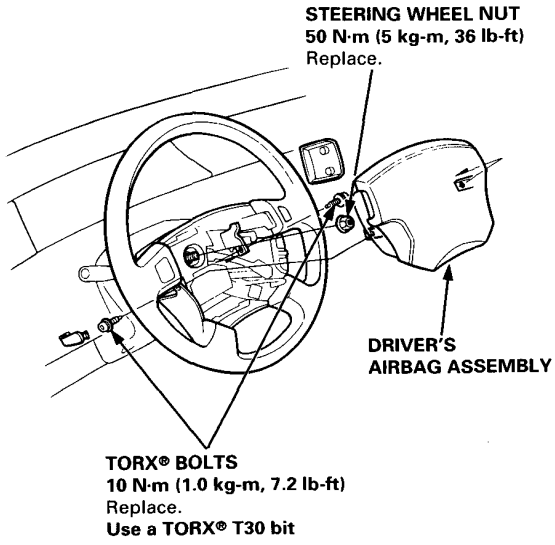

18. Install the driver's airbag assembly.

19. Connect the cable reel 6-P connector to the SRS main harness, then install the air duct and dashboard lower cover.

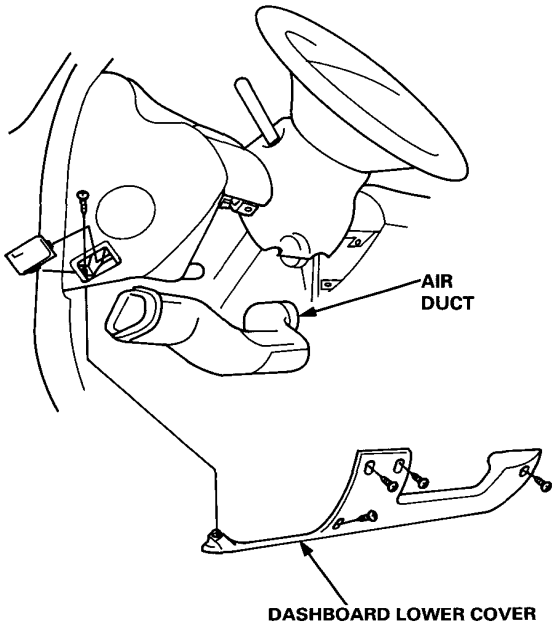

20. Remove and properly store the short connectors (RED), then reconnect the airbag connectors (and reinstall the glove box).

21. Reconnect the battery positive cable, then the negative cable.

22. After installing the cable reel, confirm proper system operation:

    - Turn the ignition ON (II); the instrument panel SRS indicator light should come on for about six seconds and then go off.
    - Make sure both horn buttons work.
    - Make sure the headlight and wiper switches work.
    - Go for a test drive and make sure the cruise control switches work.
    - Rotate the steering wheel counterclockwise to make sure the yellow gear tooth lines up with the slot on the cover.

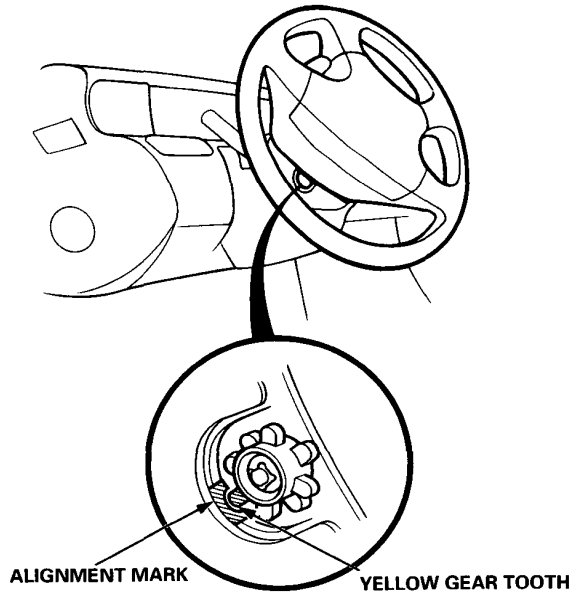

SRS Unit

Replacement

CAUTION:

- **Before disconnecting any part of the SRS wire harness, install the short connectors on the airbags.**
- **During installation or replacement, do not bump (impact wrench, hammer etc.) the area near the SRS unit.**
- **Do not damage the SRS unit terminals or connectors.**
- **Do not disassemble the SRS unit; it has no serviceable parts.**
- **Store the SRS unit in a clean, dry area.**
- **Do not use any SRS unit which has been subjected to water damage or shows signs of being dropped or improperly handled, such as dents, cracks or deformation.**

1. Disconnect the battery negative cable, then disconnect the positive cable and wait at least three minutes.

2. Connect the short connectors to the airbags (see page 23-38).

3. Remove the right side cover from the SRS unit.

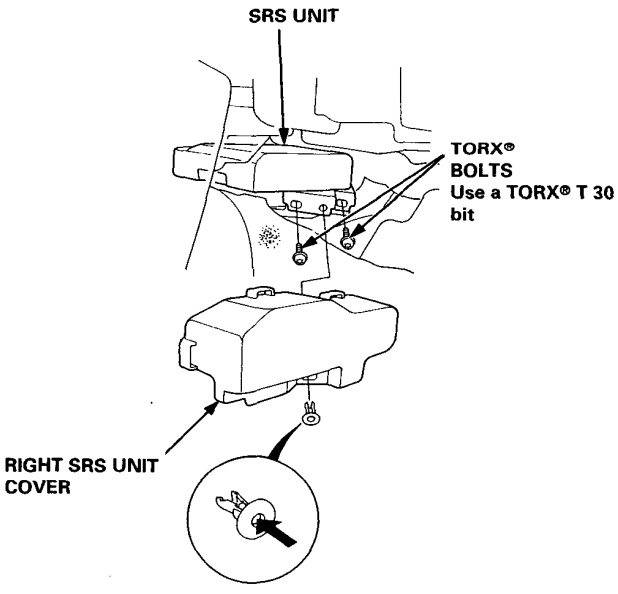

4. Remove the left side cover from the SRS unit, then disconnect the SRS main harness 18-P connector from the SRS unit.

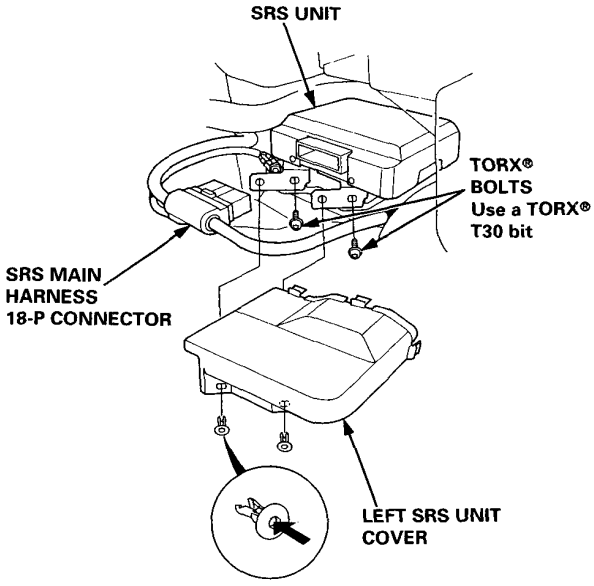

5. Remove the four SRS unit TORX® bolts, then pull the SRS unit out from the left side.

CAUTION:

- **Be sure to install the SRS wiring so that it is not pinched or interfering with other car parts.**
- **When tightening the TORX® bolts to the specified torque after replacement, be careful to turn them in so that their heads rest squarely on the brackets.**

6. Install the new SRS unit.

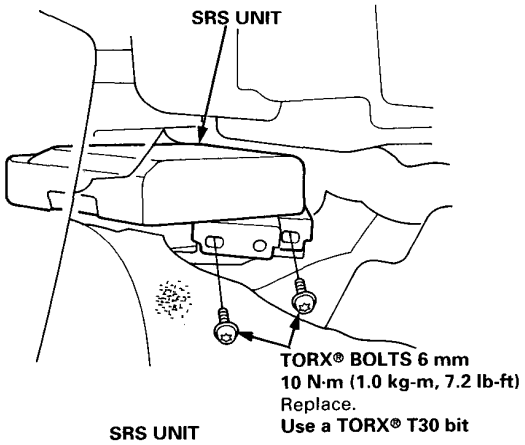

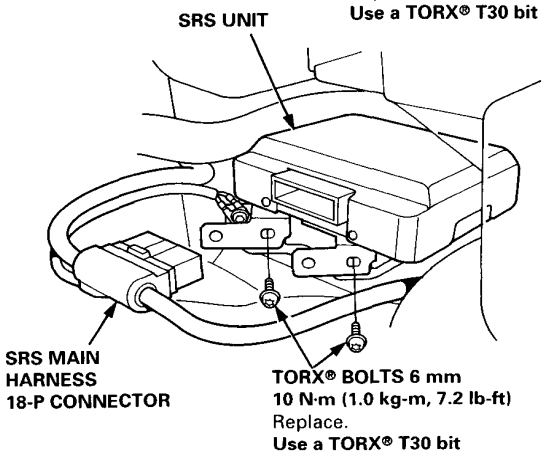

7. Connect the SRS main harness 18-P connector to the SRS unit; push it into position until it clicks.

8. Install the SRS unit covers (right and left).

9. Remove and properly store the short connectors (RED), then reconnect the airbag connectors (and reinstall the glove box).

10. Reconnect the battery positive cable, then the negative cable.

11. After installing the SRS unit, confirm proper system operation: Turn the ignition ON (II); the instrument panel SRS indicator light should come on for about six seconds and then go off.