INDEX

1 /	1	INDEX
2 /	3	JUNCTION GENERAL
3 /	4	CONTROL PANEL DIMENSIONS
4 /	5	DIESEL ENGINE
5 /	6	CONTROL LIGHTS
6 /	9	DIESEL ENGINE

Dieses Dokument ist geistiges Eigentum der Doppelmayr Seilbahnen GmbH und übertragen per 31.12. des Erstellungsjahres an die Innova Patent GmbH. Alle technischen Angaben und Zeichnungen sind urheberrechtlich geschützt. Der Inhalt dieses Dokuments darf ohne schriftliche Genehmigung der Doppelmayr Seilbahnen GmbH auch nicht auszugsweise an Dritte weitergegeben werden.

This document is the intellectual property of Doppelmayr Seilbahnen GmbH and will be transferred to Innova Patent GmbH on 31.12. of the year of creation. All technical data and drawings are protected by copyright. The content of this document, including extracts, may not be passed on to third parties without written approval from Doppelmayr Seilbahnen GmbH.

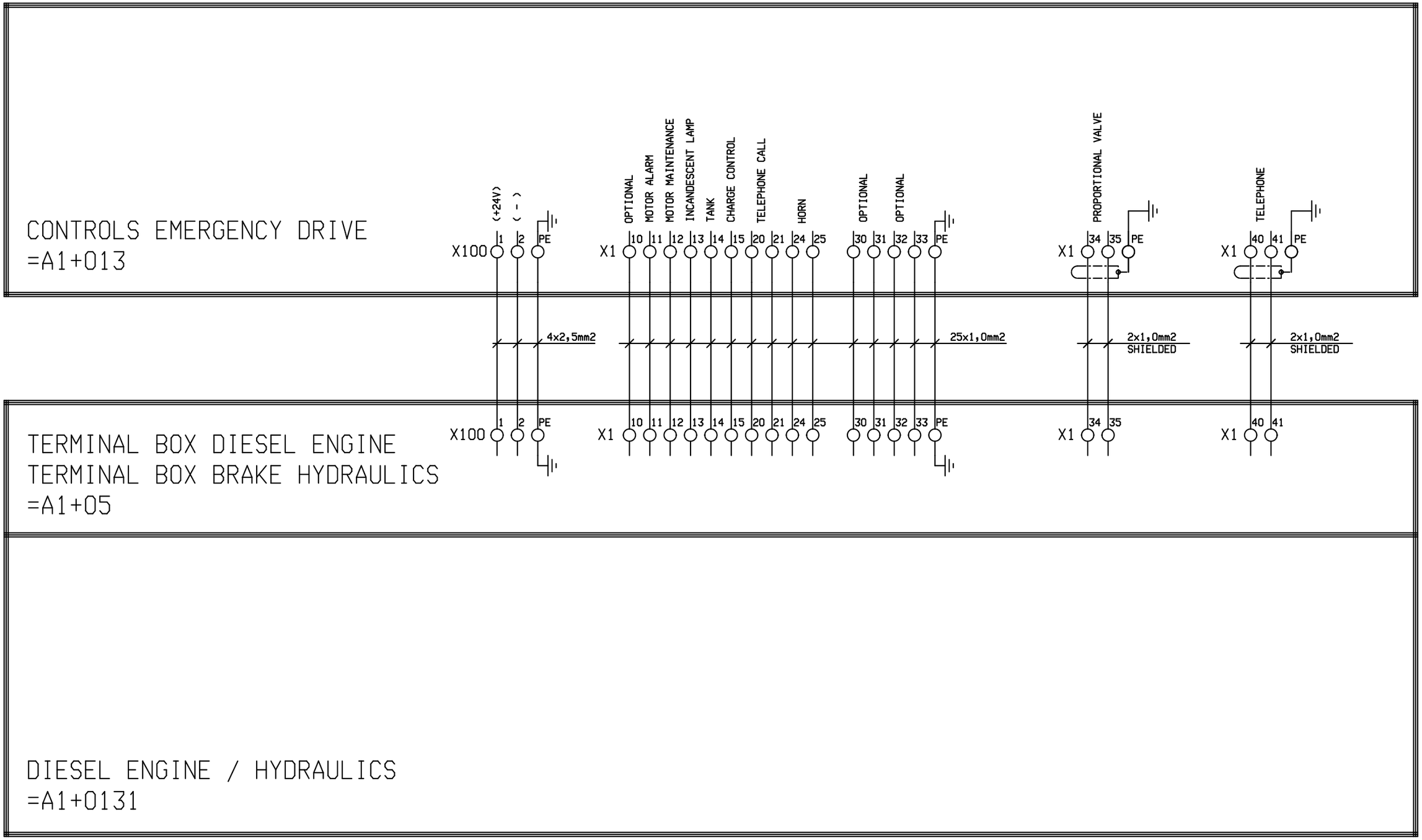

Revision	2.0	Drawn by	LOJ
Date	22.03.12	Dr.ch.by	Fhs
File:	NKWAA2638		

10-MGD BANA BIG ROPEWAY
WAA0002638
BANA / VIETNAM

Doppelmayr ®
Innova Patent GmbH
A-6960 WOLFURT / AUSTRIA

JUNCTION GENERAL

DRIVE STATION

TERMINAL BOX EM. DRIVE / BRAKE HYD.

=A1+05

Date	22.03.12
Sheet :	3
Cont.sheet:	4

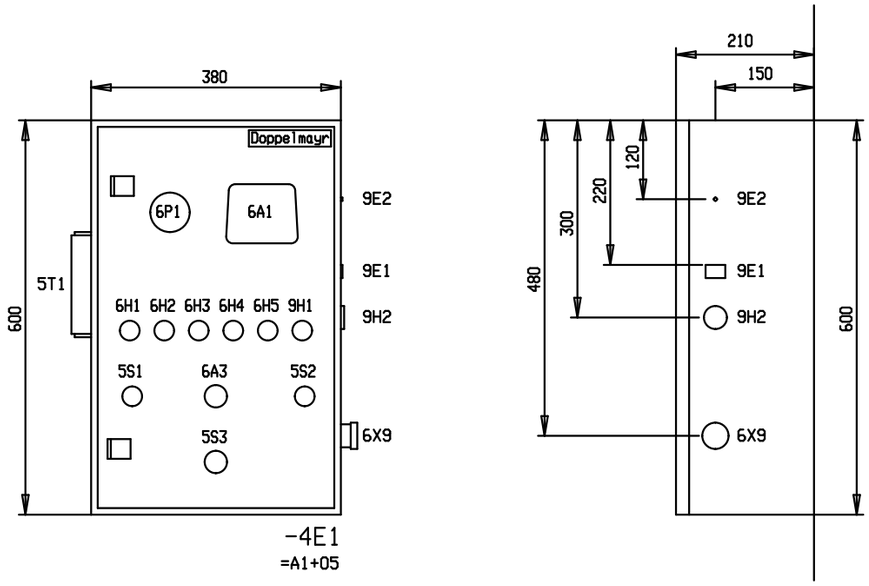

-4E2 =A1+05 1x LSC-FRAME

-4E3 =A1+05 1x STICKER - "Doppelmayr-Logo"

6P1..... TANK INDICATION

6A1..... SCREEN

6H1..... CHARGE CONTROL

6H2..... TANK

6H3..... INCANDESCENT LAMP

6H4..... MOTOR MAINTENANCE

6H5..... MOTOR ALARM

9H1..... TELEPHONE CALL

5S1..... CONTROL VOLTAGE ON / MOTOR START

6A3..... DIESEL SPEED CONTROL

5S2..... MOTOR STOP

5S3..... FUEL PREHEATING

5T1..... BATTERY CHARGER

9E2..... HEAD PHONE TELEPHONE

9E1..... TELEPHONE

9H2..... HORN

6X9..... CONNECTOR - MOTOR MAINTENANCE

Revision	2.0	Drawn by	LOJ
Date	22.03.12	Dr.ch.by	Fhs
File:	NKWAA2638		

10-MGD BANA BIG ROPEWAY
WAA0002638
BANA / VIETNAM

Doppelmayr ®
Innova Patent GmbH
A-6960 WOLFURT / AUSTRIA

CONTROL PANEL DIMENSIONS

DRIVE STATION | TERMINAL BOX EM. DRIVE / BRAKE HYD.

=A1+05

Date	16.11.07
Sheet :	4
Cont.sheet:	5

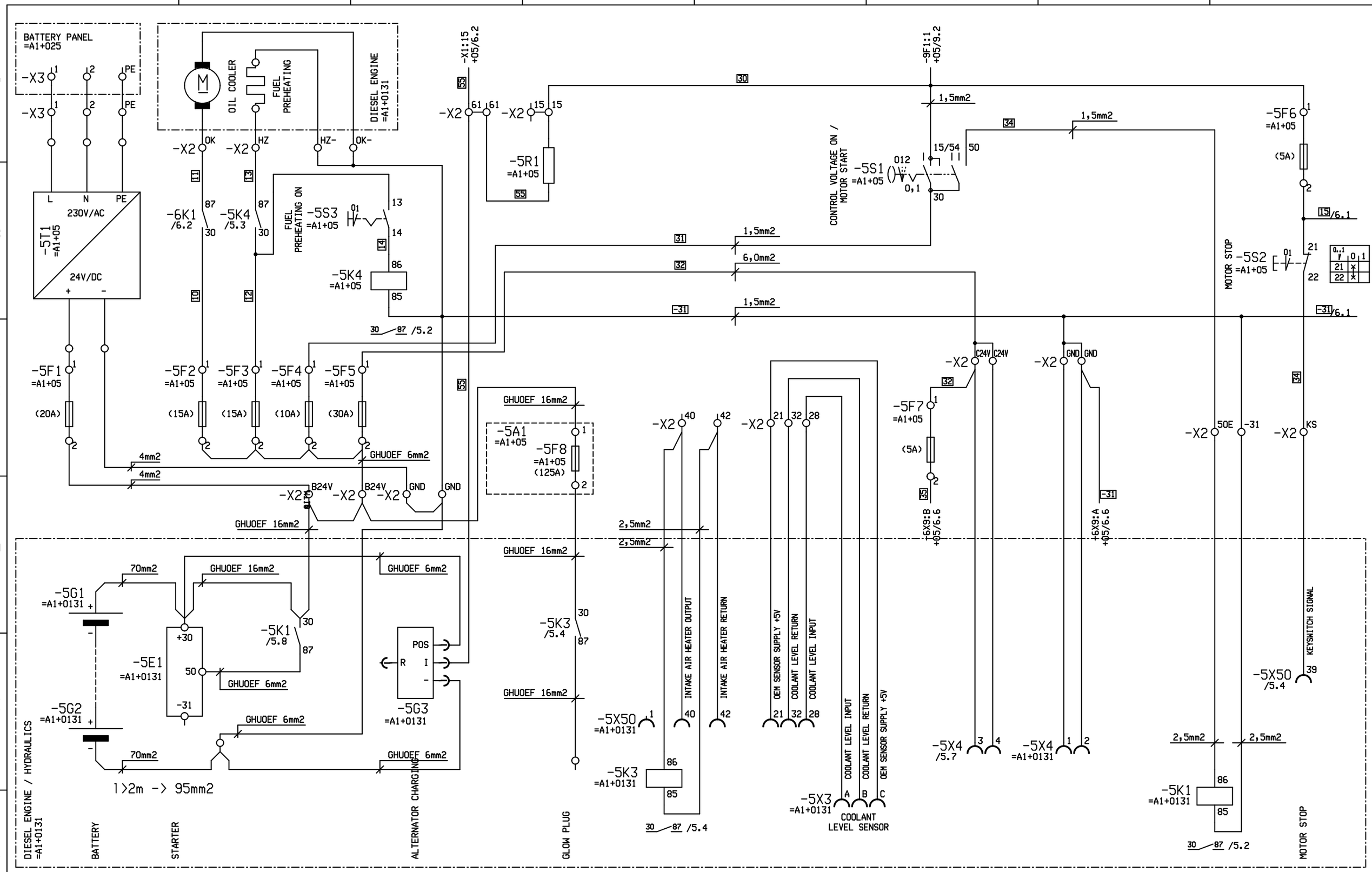

Revision	2.0	Drawn by	LOJ
Date	22.03.12	Dr.ch.by	Fhs
File:	NKWAA2638		

10-MGD BANA BIG ROPEWAY
WAA0002638
BANA / VIETNAM

Doppelmayr ®
Innova Patent GmbH
A-6960 WOLFURT / AUSTRIA

DIESEL ENGINE

DRIVE STATION

TERMINAL BOX EM. DRIVE / BRAKE HYD.

=A1+05

Date	22.03.12
Sheet :	5
Cont.sheet:	6

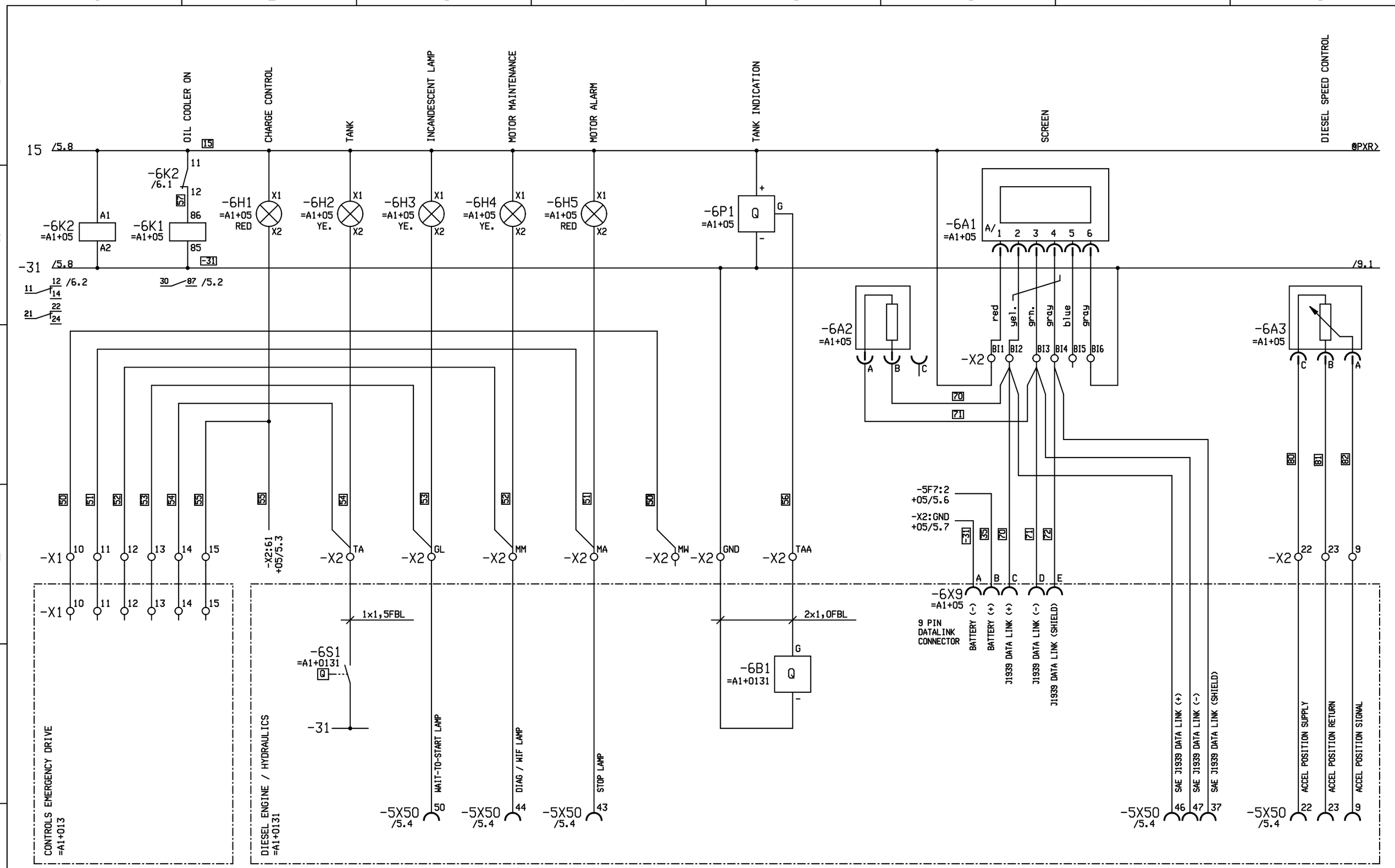

50 - 99

Revision	2.0	Drawn by	LOJ
Date	22.03.12	Dr.ch.by	Fhs

File: NKWAA2638

10-MGD BANA BIG ROPEWAY
WAA0002638
BANA / VIETNAM

Doppelmayr ®
Innova Patent GmbH
A-6960 WOLFURT / AUSTRIA

CONTROL LIGHTS

DRIVE STATION | TERMINAL BOX EM. DRIVE / BRAKE HYD.

=A1+05

Date	16.11.07
Sheet :	6
Cont.sheet:	9

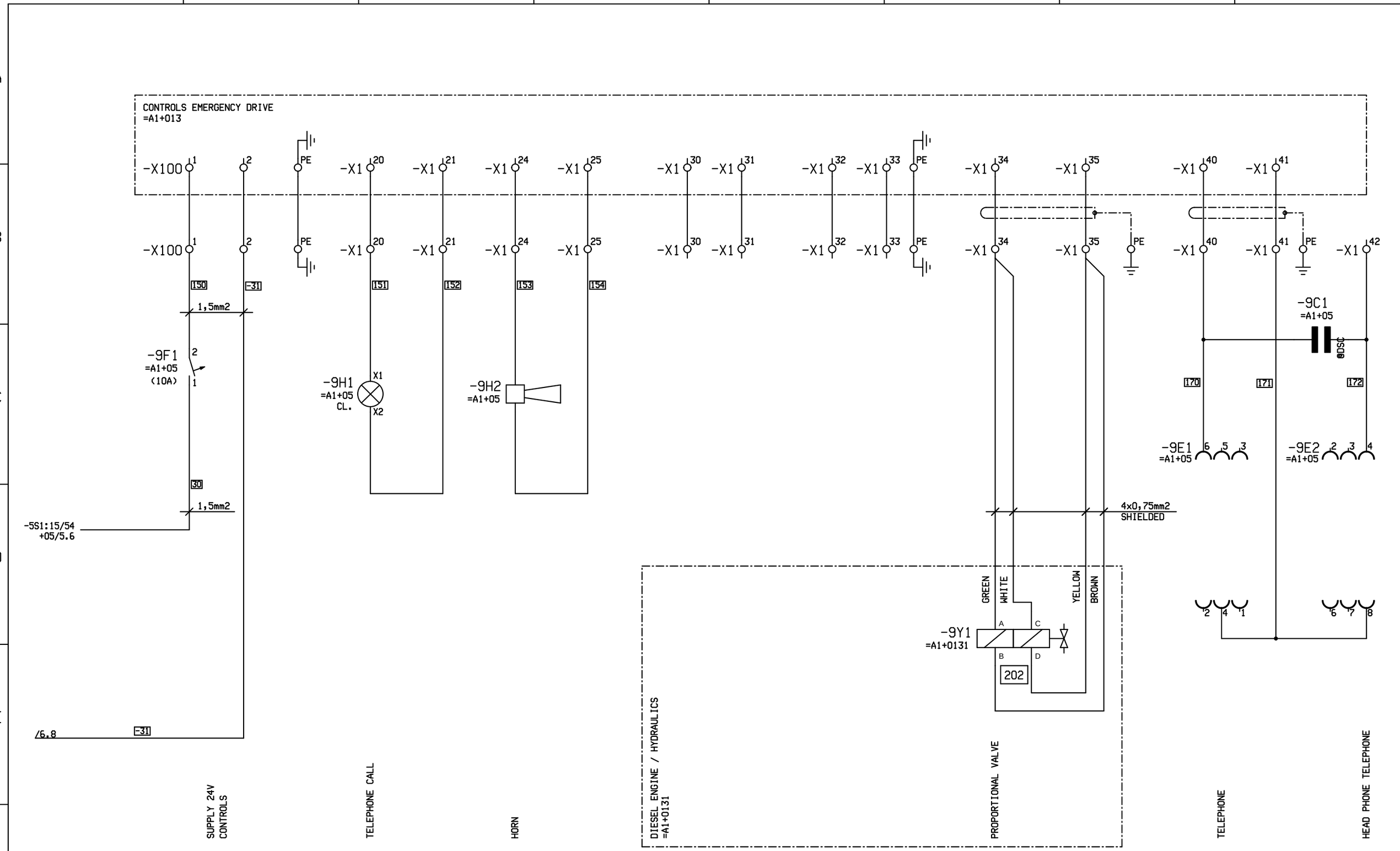

150 - 199

XXX Designations refer to hydraulic diagrams

Revision	2.0	Drawn by	LOJ
Date	22.03.12	Dr.ch.by	Fhs
File:	NKWAA2638		

10-MGD BANA BIG ROPEWAY
WAA0002638
BANA / VIETNAM

Doppelmayr ®
Innova Patent GmbH
A-6960 WOLFURT / AUSTRIA

DIESEL ENGINE

DRIVE STATION

TERMINAL BOX EM. DRIVE / BRAKE HYD.

=A1+05

Date	22.03.12
Sheet :	9
Cont.sheet:	