INDEX

1/ 1 INDEX
2/ 2 INFORMATION
3/ 3 CONTROL PANEL DIMENSIONS
4/ 4 CONTROL PANEL DIMENSIONS
5/ 8 POWER SUPPLY 3x400/230V
6/ 10 POWER SUPPLY 3x400/230V / 24V
7/ 11 CONTROLS ON / HEATER / LIGHTING
8/ 12 EVALUATION DEVICE CURRENT RELAY
9/ 14 CONTROLS 24V
10/ 20 CONNECTIONS TO MAIN CONTROLS
11/ 25 SAFETY CONTROL UNIT
12/ 26 CONTROL STO
13/ 27 TEST BUTTON STO
14/ 30 PC - INPUT
15/ 31 PC - INPUT
16/ 33 PC - INPUT
17/ 50 CONTROL LIGHTS
18/ 61 RAIL W1
19/ 62 RAIL W2
20/ 63 RAIL W3
21/ 64 RAIL W4
22/ 65 RAIL W5
23/ 66 RAIL W6
24/ 67 RAIL W7
25/ 68 RAIL W8
26/110 CONVEYOR KF - FREQUENCY CONVERTER
27/111 CONVEYOR KF - CONTROLS 230V / 24V
28/112 CONVEYOR KF - CONTROLS 24V
29/113 CONVEYOR KF - CONTROLS 24V
30/400 PLC-CENTRAL UNIT CX8090 / PC - INPUT KL1408
31/405 PC - OUTPUT KL2408
32/410 PC - OUTPUT KL2622

Dieses Dokument ist geistiges Eigentum der Doppelmayr Seilbahnen GmbH und übertragen per 31.12. des Erstellungsjahres an die Innova Patent GmbH. Alle technischen Angaben und Zeichnungen sind urheberrechtlich geschützt. Der Inhalt dieses Dokuments darf ohne schriftliche Genehmigung der Doppelmayr Seilbahnen GmbH auch nicht auszugsweise an Dritte weitergegeben werden.

This document is the intellectual property of Doppelmayr Seilbahnen GmbH and will be transferred to Innova Patent GmbH on 31.12. of the year of creation. All technical data and drawings are protected by copyright. The content of this document, including extracts, may not be passed on to third parties without written approval from Doppelmayr Seilbahnen GmbH.

Revision	2.0	Drawn by	MLB
Date	18.10.16	Dr.ch.by	FMa
File:	BRWAA4185		

10-MGD BaNa 4
WAA0004185
Danang / Vietnam

Doppelmayr ®
Innova Patent GmbH
A-6960 WOLFURT / AUSTRIA

INDEX

RETURN STATION | PARKING

=A2+011

Date	10.05.17
Sheet :	1
Cont.sheet:	2

LOCATION:

A1 ... DRIVE STATION
A2 ... RETURN STATION
A3 ... MIDDLE STATION

O1 ... CONTROL PANEL
O3 ... STATION
O11... PARKING
O141.. R.M.C. 1
O142.. R.M.C. 2
O143.. R.M.C. 3
O144.. R.M.C. 4
O145.. R.M.C. 5 OPTIONAL
O146.. R.M.C. 6 OPTIONAL
O147.. R.M.C. 7 OPTIONAL
O148.. R.M.C. 8 OPTIONAL
O149.. R.M.C. 9 OPTIONAL
O240.. R.M.C. 10 OPTIONAL
O241.. R.M.C. 11 OPTIONAL
O242.. R.M.C. 12 OPTIONAL

TERMINAL STRIP:

X1 ... POWER SUPPLY 24V/DC
X2 ... THREE-PHASE MOTORS
X3.... MAGNETIC CLUTCH / HEATER
X4 ... POWER SUPPLY (AC)
X5 ... SPINDLE MOTOR
X6 ... LIMIT SWITCHES
X7 ... BRAKE RESISTOR
X8 ... REMOTE CONTROLS
X9 ... SIGNALISATION
X10... KLIXON
X23... CONNECTIONS TO MAIN CONTROLS
X41... PRINT DIAGRAM FOR PARKING
X100... CONTROL STO

CHARACTERISTIC FEATURES OF THE SWITCHGEAR ASSEMBLY BY EN61439-1:

ELECTRICAL NETWORK	
POWER SYSTEM BY TYPE OF GROUND CONNECTION	TN-C-S
RATED VOLTAGE (Un)	400V
ALLOWED VOLTAGE DEVIATION AT THE CONNECTION OF SUPPLY	+/-5%
RATED FREQUENCY (fn)	50Hz
RATED IMPULSE STRENGTH VOLTAGE (Uimp)	2,5kV
RATED INSULATION VOLTAGE (Ui)	500V
SHORT CIRCUIT RATING	
MAXIMUM PROSPECTIVE SHORT-CIRCUIT CURRENT AT THE CONNECTION OF SUPPLY < 10kA ROOT MEAN SQUARE	
PROTECTION OF PERSONS AGAINST ELECTRIC SHOCK BY IEC 60364-4-41	
KIND OF PROTECTION AGAINST ELECTRIC SHOCK - BASIC PROTECTION	BASIC PROTECTION BY CONSTRUCTIVE MEASURES
KIND OF PROTECTION AGAINST ELECTRIC SHOCK - FAULT PROTECTION	PROTECTIVE MULTIPLE EARTHING
INSTALLATION ENVIRONMENT	
INSTALLATION AREA	OUTDOOR
PROTECTION CLASS	CABINET BOTTOM SIDE: IPX1B, REMAINING PARTS OF THE CABINET: IP21
AMBIENT TEMPERATURE	-25°C - +30°C
POLLUTION DEGREE	2
EMC - ENVIRONMENT	A
MAX. HUMIDITY	100%
CURRENT CARRYING CAPACITY	
RATED CURRENT (InA)	SEE OVERCURRENT PROTECTION DEVICES
RATED CURRENT (Inc)	SEE OVERCURRENT PROTECTION DEVICES

Revision	2.0	Drawn by	MLB
Date	18.10.16	Dr.ch.by	FMa
File:	BRWAA4185		

10-MGD BaNa 4
WAA0004185
Danang / Vietnam

Doppelmayr ®
Innova Patent GmbH
A-6960 WOLFURT / AUSTRIA

INFORMATION

RETURN STATION | PARKING

=A2+011

Date	15.09.16
Sheet :	2
Cont.sheet:	3

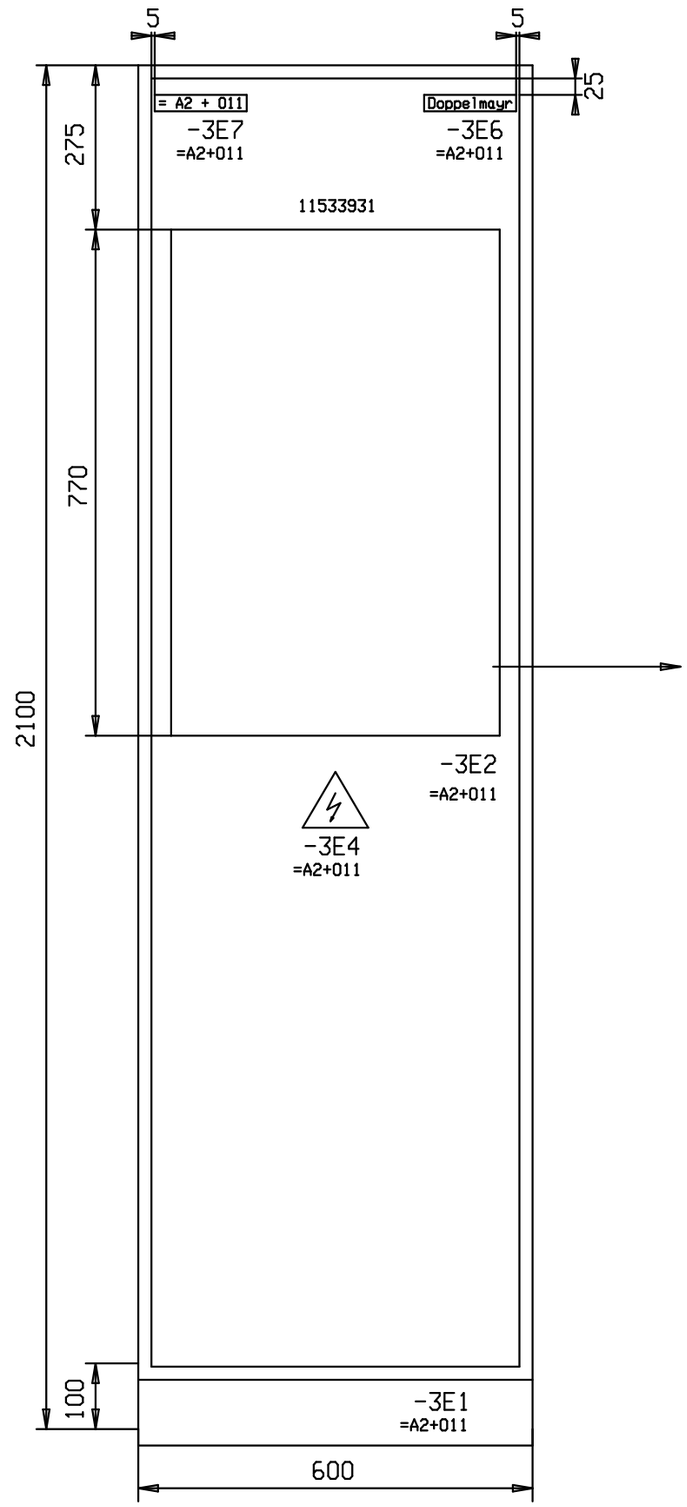

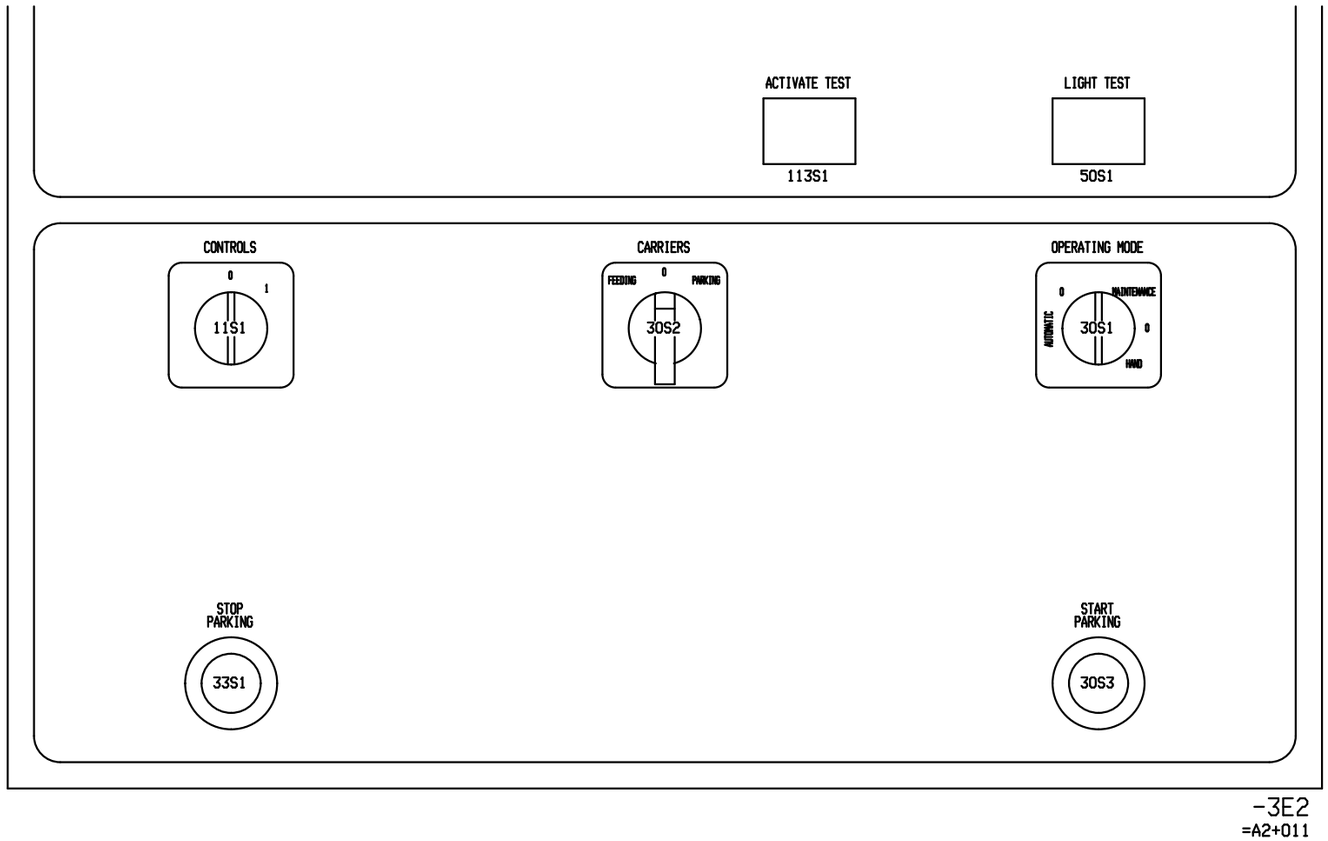

-3E2
=A2+011

-3E3 =A2+011 2x SIDE WALL
-3E4 =A2+011 1x STICKER - ATTENTION - ELECTRICITY
-3E5 =A2+011 1x LSC-FRAME
-3E6 =A2+011 1x STICKER - "Doppelmayr-Logo"
-3E7 =A2+011 1x STICKER - "=A2+011"

-3E9 =A2+011 1x WIRING MATERIAL A1+011
-3E10 =A2+011 1x CONTROL PANEL DOOR MACHINED (TS 8605.510 SLP re.)

Revision	2.0	Drawn by	MLB
Date	18.10.16	Dr.ch.by	FMa
File:	BRWAA4185		

10-MGD BaNa 4
WAA0004185
Danang / Vietnam

Doppelmayr ®
Innova Patent GmbH
A-6960 WOLFURT / AUSTRIA

CONTROL PANEL DIMENSIONS

RETURN STATION | PARKING

=A2+011

Date	15.09.16
Sheet :	3
Cont.sheet:	4

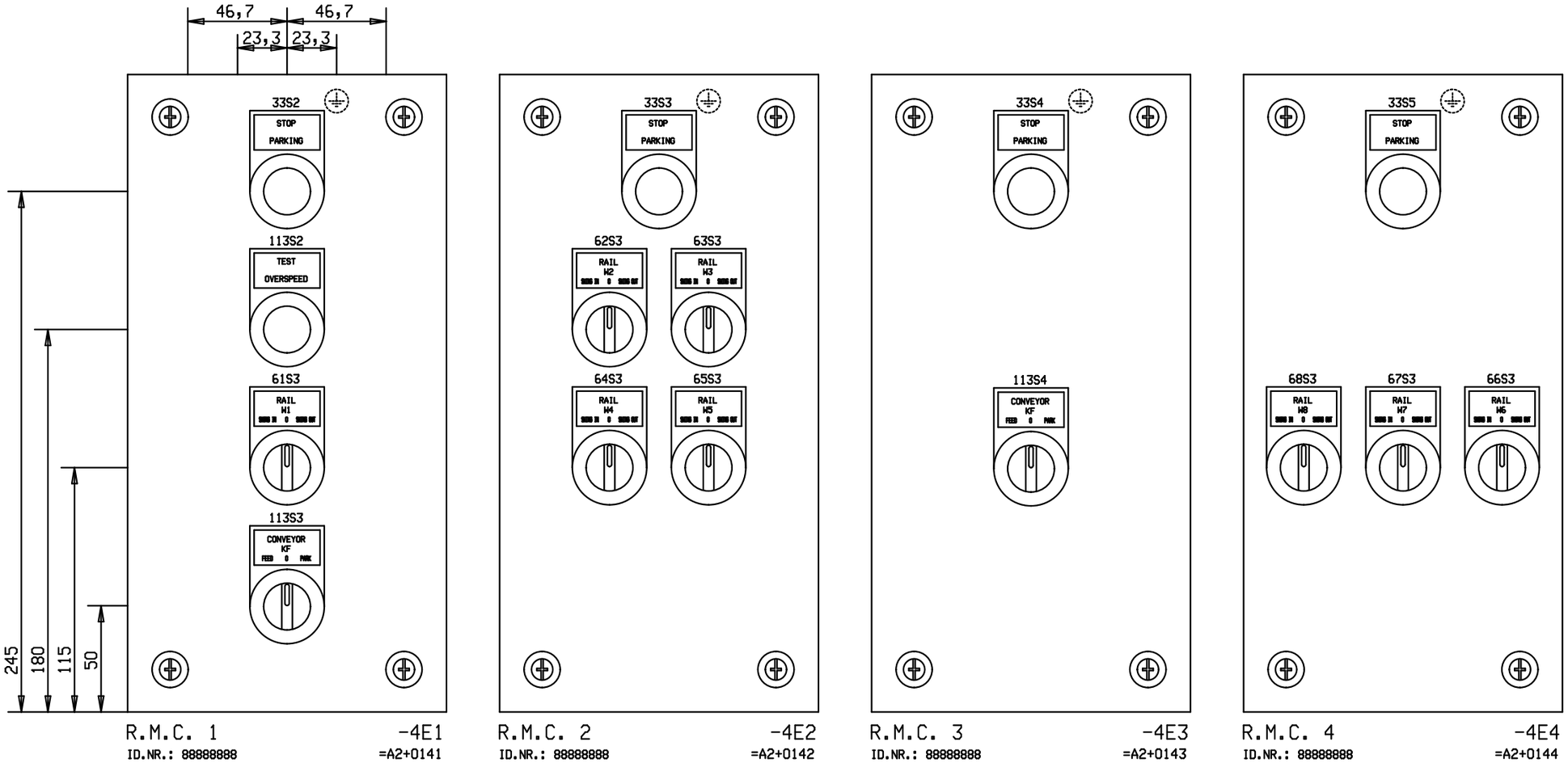

R.M.C. 1 -4E1
ID.NR.: 88888888 =A2+0141

R.M.C. 2 -4E2
ID.NR.: 88888888 =A2+0142

R.M.C. 3 -4E3
ID.NR.: 88888888 =A2+0143

R.M.C. 4 -4E4
ID.NR.: 88888888 =A2+0144

Revision	2.0	Drawn by	MLB
Date	18.10.16	Dr.ch.by	FMa

File: BRWAA4185

10-MGD BaNa 4
WAA0004185
Danang / Vietnam

Doppelmayr ®
Innova Patent GmbH
A-6960 WOLFURT / AUSTRIA

CONTROL PANEL DIMENSIONS

RETURN STATION | PARKING

=A2+011

Date	29.07.16
Sheet :	4
Cont.sheet:	8

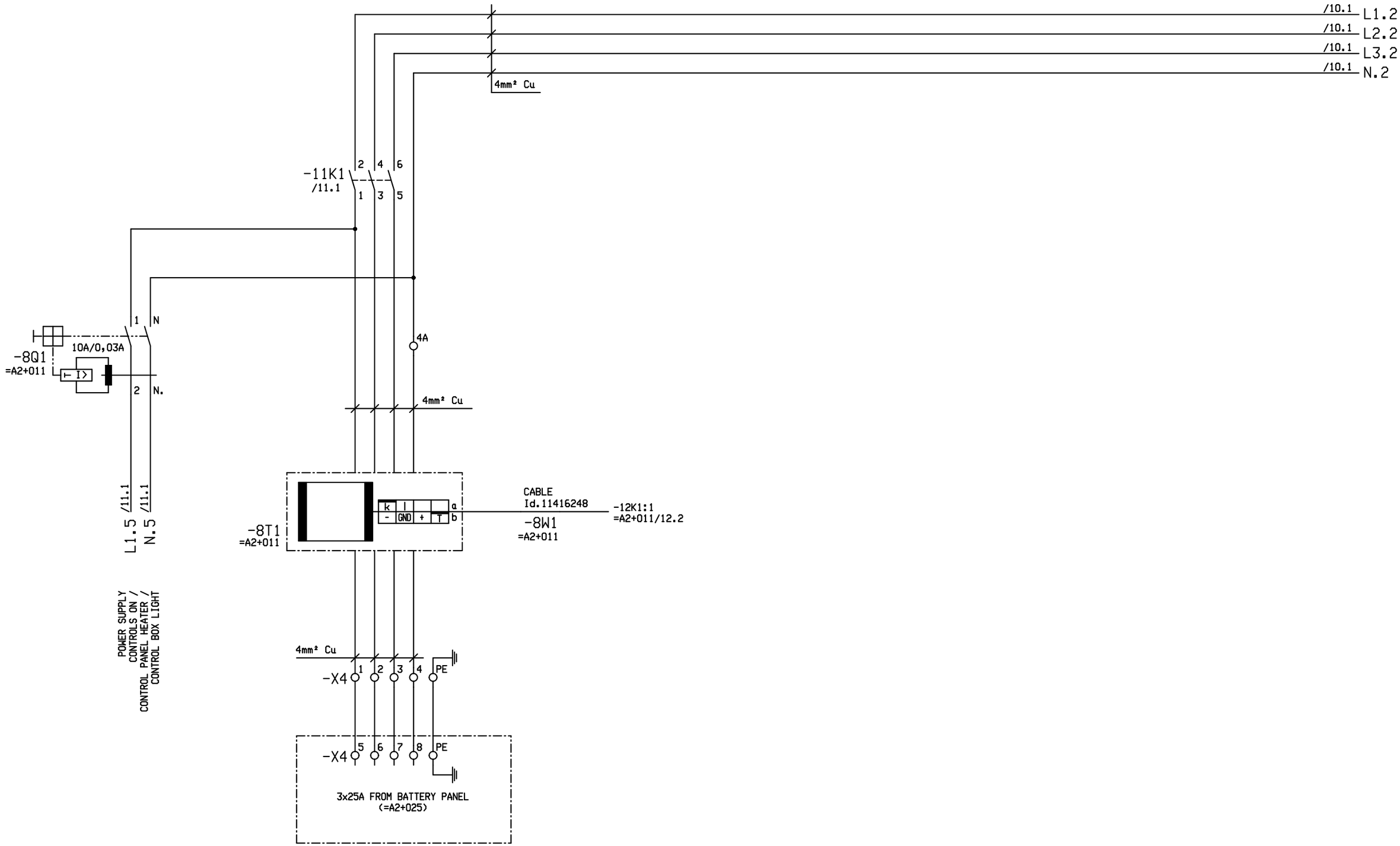

Revision	2.0	Drawn by	MLB
Date	18.10.16	Dr.ch.by	FMa

File: BRWAA4185

10-MGD BaNa 4
WAA0004185
Danang / Vietnam

Doppelmayr ®
Innova Patent GmbH
A-6960 WOLFURT / AUSTRIA

POWER SUPPLY 3x400/230V

RETURN STATION | PARKING

=A2+011

Date	29.07.16
Sheet :	8
Cont.sheet:	10

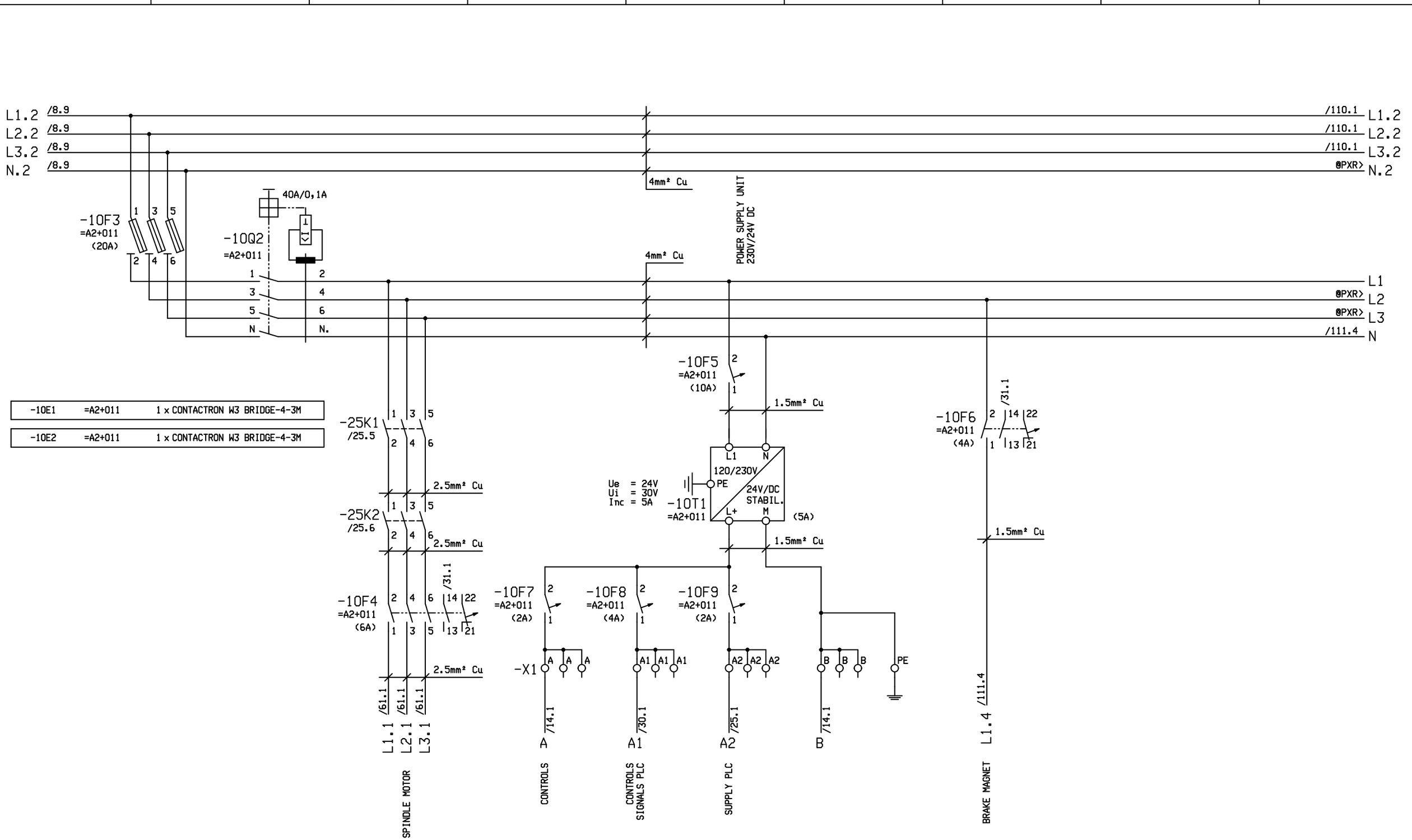

-10E1	=A2+011	1 x CONTACTRON W3 BRIDGE-4-3M
-10E2	=A2+011	1 x CONTACTRON W3 BRIDGE-4-3M

Revision	2.0	Drawn by	MLB
Date	18.10.16	Dr.ch.by	FMa
File:	BRWAA4185		

10-MGD BaNa 4
WAA0004185
Danang / Vietnam

Doppelmayr ®
Innova Patent GmbH
A-6960 WOLFURT / AUSTRIA

POWER SUPPLY 3x400/230V / 24V

RETURN STATION

PARKING

=A2+011

Date	29.07.16
Sheet :	10
Cont.sheet:	11

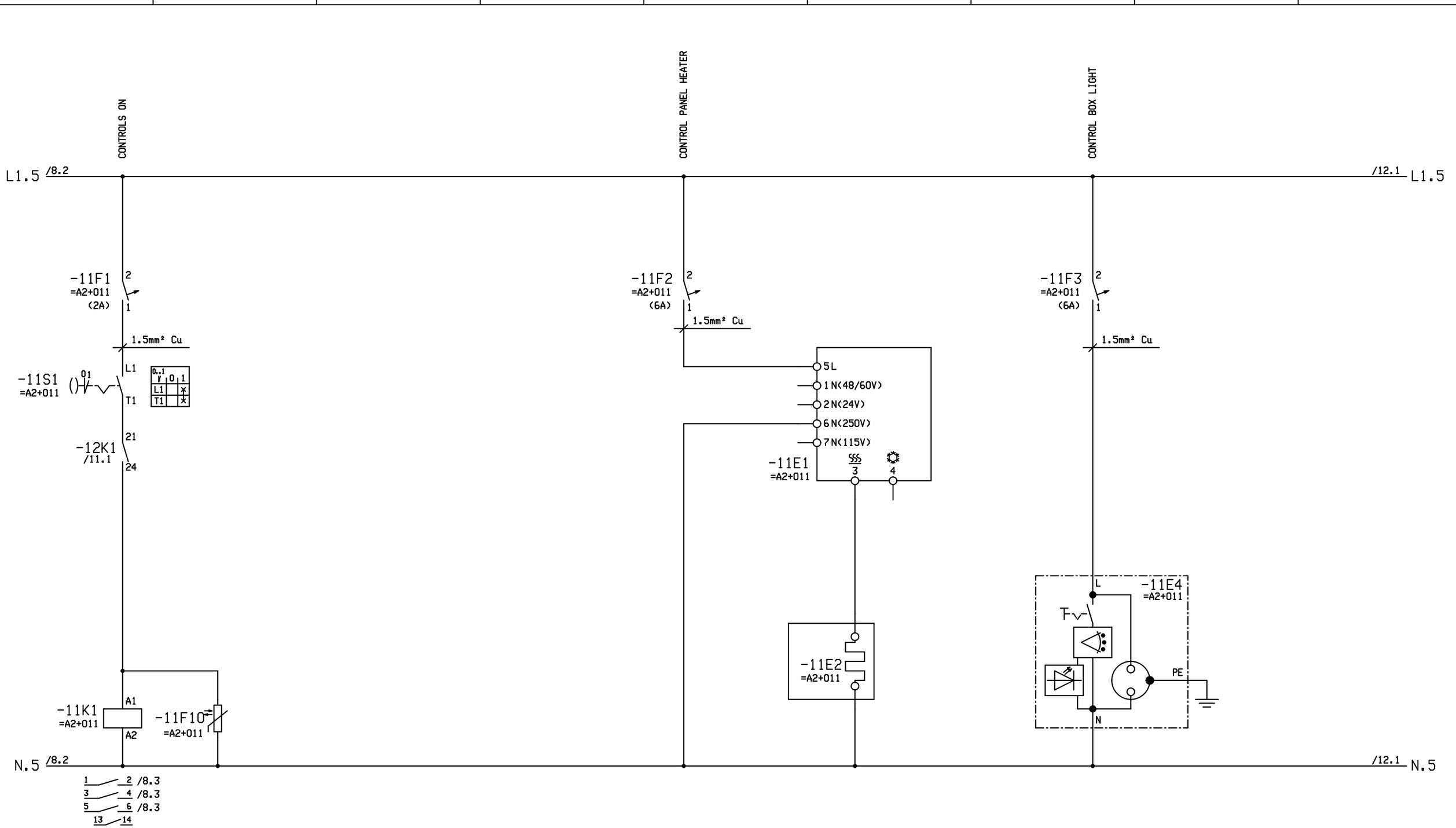

Revision	2.0	Drawn by	MLB
Date	18.10.16	Dr.ch.by	FMa
File:	BRWAA4185		

10-MGD BaNa 4
WAA0004185
Danang / Vietnam

Doppelmayr ®
Innova Patent GmbH
A-6960 WOLFURT / AUSTRIA

CONTROLS ON / HEATER / LIGHTING

RETURN STATION | PARKING

=A2+011

Date	28.07.16
Sheet :	11
Cont.sheet:	12

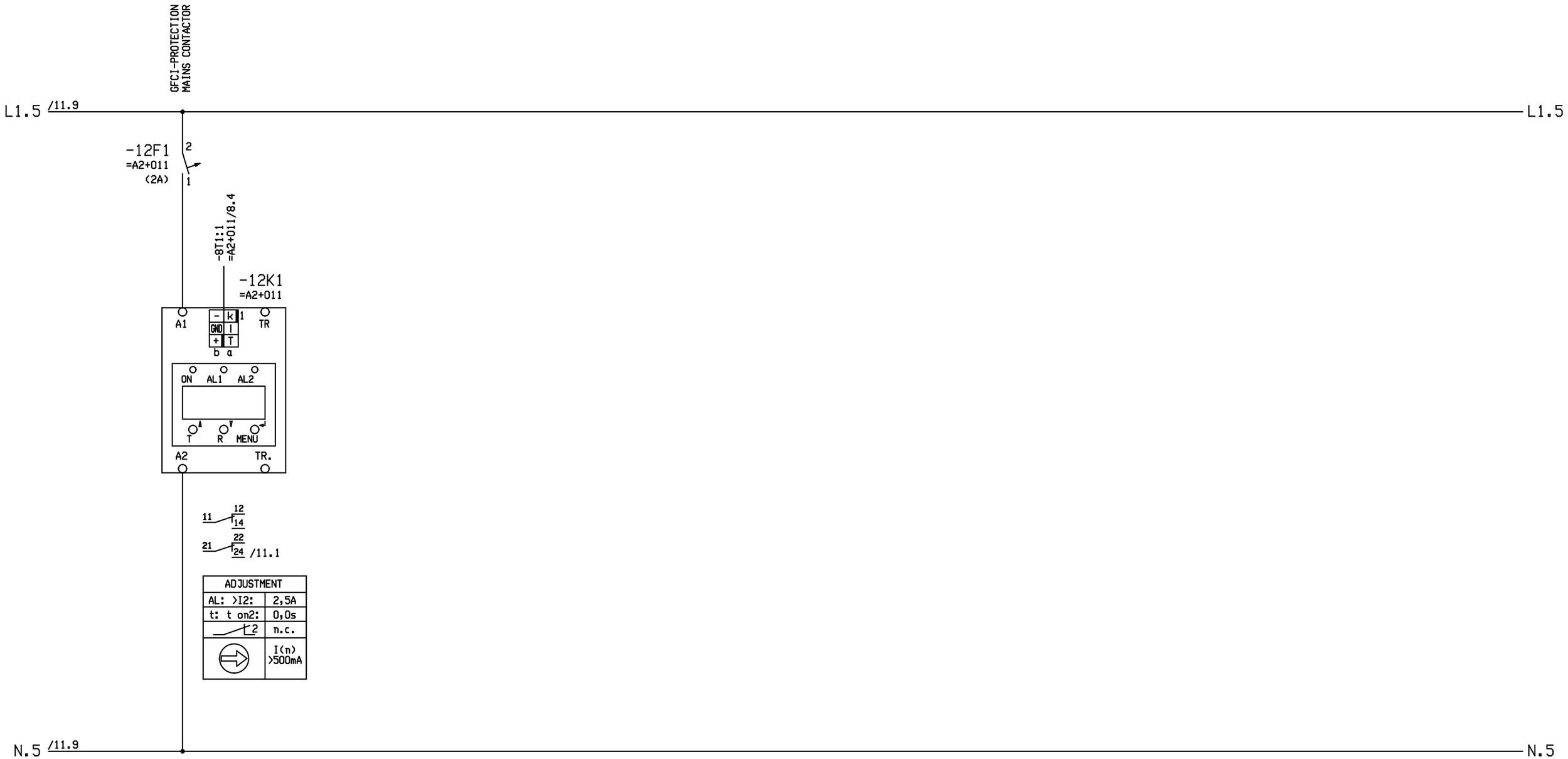

Revision	2.0	Drawn by	MLB
Date	18.10.16	Dr.ch.by	FMa
File:	BRWAA4185		

10-MGD BaNa 4
WAA0004185
Danang / Vietnam

Doppelmayr ®
Innova Patent GmbH
A-6960 WOLFURT / AUSTRIA

EVALUATION DEVICE CURRENT RELAY

RETURN STATION | PARKING

=A2+011

Date	28.07.16
Sheet :	12
Cont.sheet:	14

SETPOINT CALIBRATOR
MAINTENANCE MODE

A /10.4 — /20.1 A

B /10.6 — /20.1 B

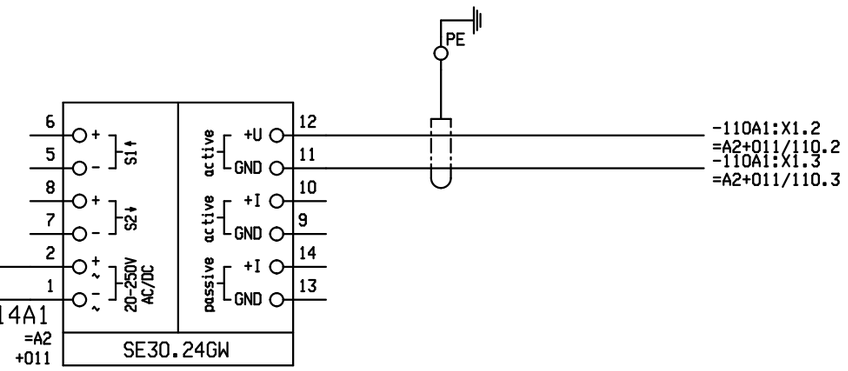

@DSC

SE 30.xx GW		
PARAMETER	SIGNAL	WERT
out.A	AUSGANG ANFANG [%]	0
out.E	AUSGANG ENDE [%]	60
diS.A	ANZEIGE ANFANG	0
diS.E	ANZEIGE ENDE	6,0
rAMP	RAMPENZEIT [s]	1
AUSGABE	SOLLWERT [V]	6
	SOLLWERT [mA]	-

Revision	2.0	Drawn by	MLB
Date	18.10.16	Dr.ch.by	FMa
File:	BRWAA4185		

10-MGD BaNa 4
WAA0004185
Danang / Vietnam

Doppelmayr ®
Innova Patent GmbH
A-6960 WOLFURT / AUSTRIA

CONTROLS 24V

RETURN STATION | PARKING

=A2+011

Date	18.10.16
Sheet :	14
Cont.sheet:	20

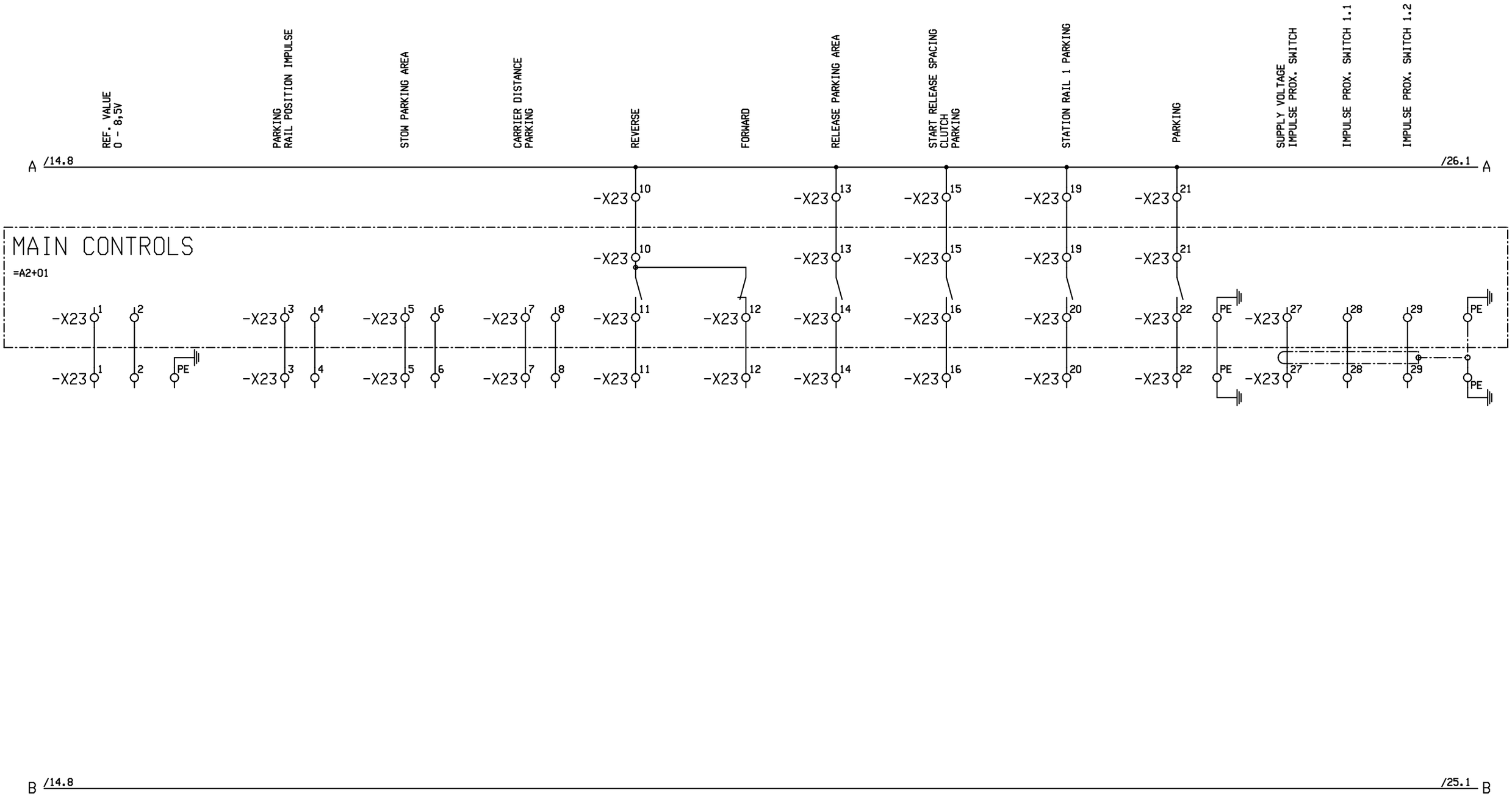

Revision	2.0	Drawn by	MLB	10-MGD BaNa 4	Doppelmayr ®	CONNECTIONS TO MAIN CONTROLS	=A2+011
Date	18.10.16	Dr.ch.by	FMa	WAA0004185			Date 28.07.16
File:	BRWAA4185			Danang / Vietnam	Innova Patent GmbH A-6960 WOLFURT / AUSTRIA	RETURN STATION / PARKING	Sheet : 20
							Cont.sheet: 25

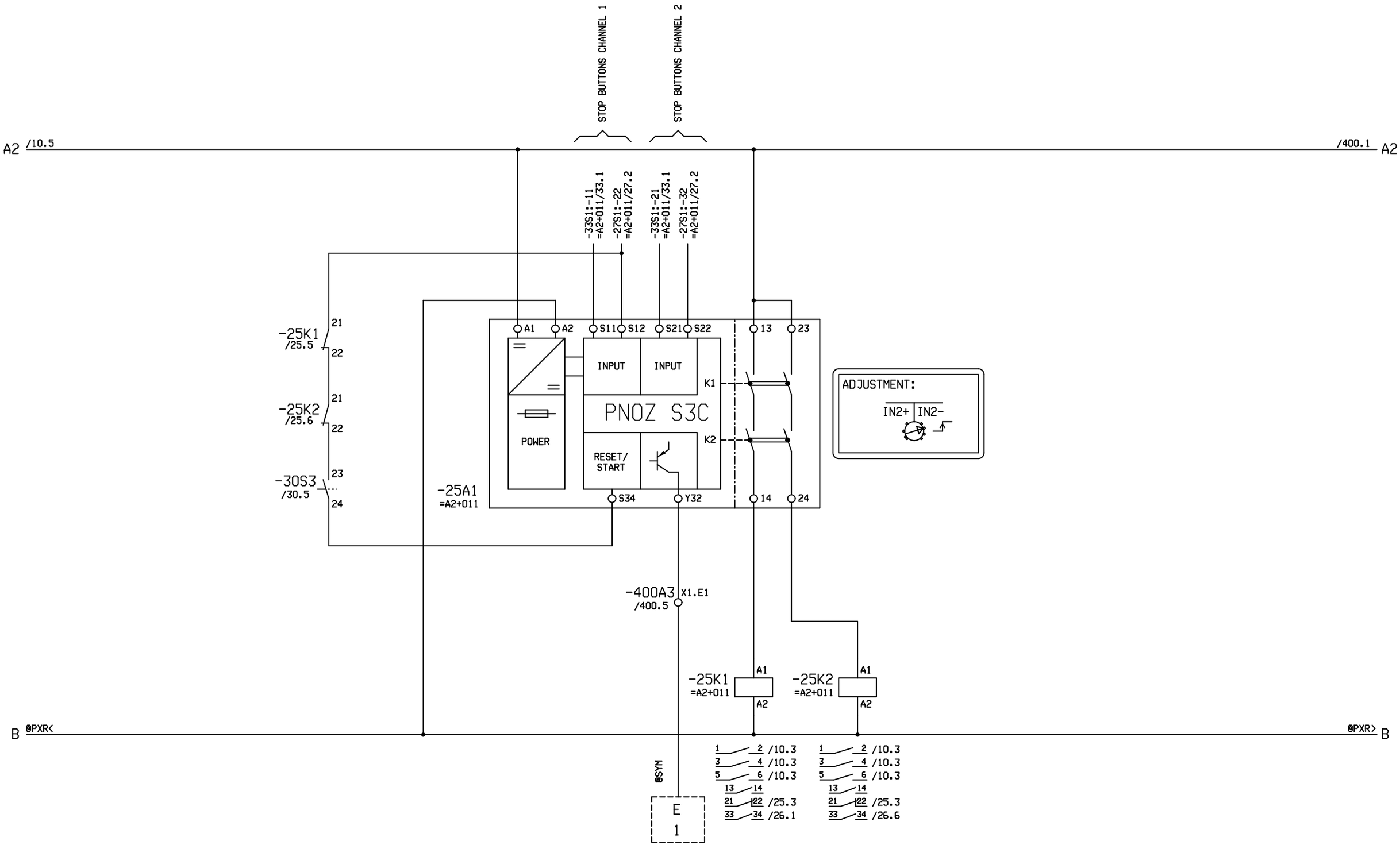

Revision	2.0	Drawn by	MLB
Date	18.10.16	Dr.ch.by	FMa

File: BRWAA4185

10-MGD BaNa 4
WAA0004185
Danang / Vietnam

Doppelmayr ®
Innova Patent GmbH
A-6960 WOLFURT / AUSTRIA

SAFETY CONTROL UNIT

RETURN STATION | PARKING

=A2+011

Date	28.07.16
Sheet :	25
Cont.sheet:	26

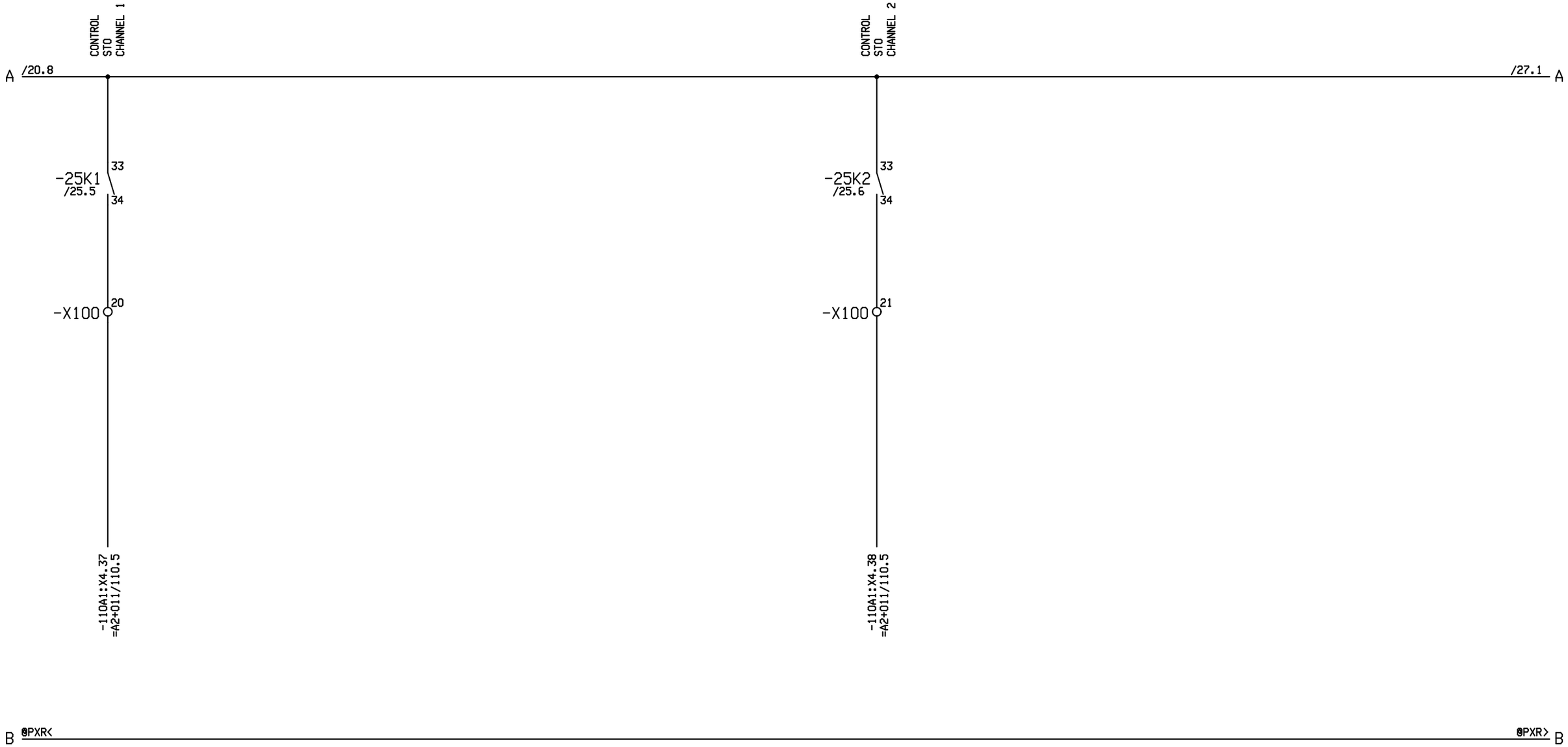

Revision	2.0	Drawn by	MLB
Date	18.10.16	Dr.ch.by	FMa
File:	BRWAA4185		

10-MGD BaNa 4
WAA0004185
Danang / Vietnam

Doppelmayr ®
Innova Patent GmbH
A-6960 WOLFURT / AUSTRIA

CONTROL STO

RETURN STATION

PARKING

=A2+011

Date	18.10.16
Sheet :	26
Cont.sheet:	27

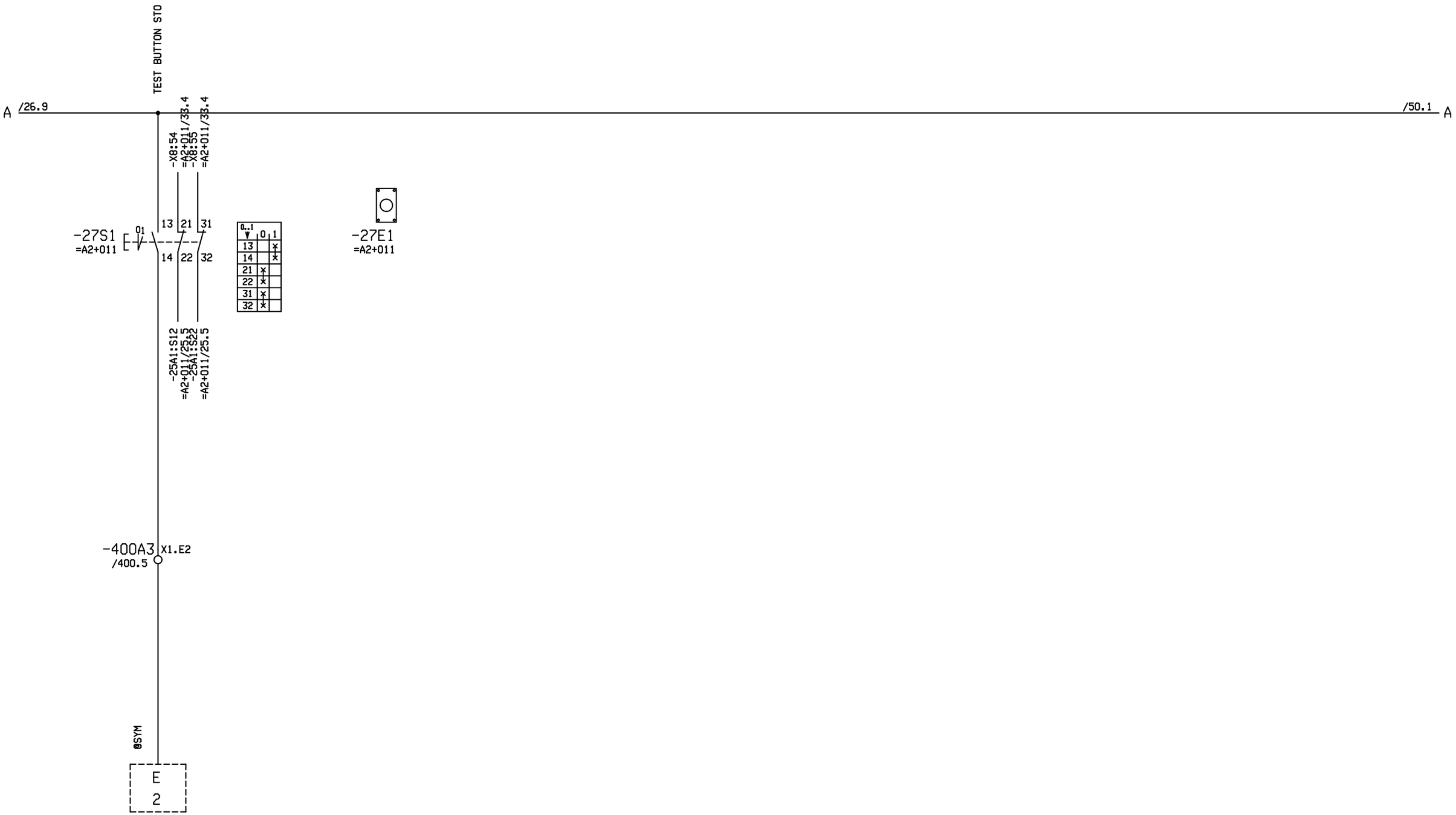

Revision	2.0	Drawn by	MLB	10-MGD BaNa 4	Doppelmayr ®	TEST BUTTON STO	=A2+011
Date	18.10.16	Dr.ch.by	FMa	WAA0004185			Date 28.07.16
File:	BRWAA4185			Danang / Vietnam	Innova Patent GmbH A-6960 WOLFURT / AUSTRIA	RETURN STATION / PARKING	Sheet : 27 Cont.sheet: 30

AUTOMATIC MODE

MANUAL OPERATION

FEED ROPEWAY

PARK ROPEWAY

START PARKING

A1 /10.5

/31.1 A1

-30S1
=A2+011

102

0..2	1	0	2
1	x		
2	x		
3			x
4			x

OPERATING MODE

1...AUTOMATIC MODE
2...MANUAL OPERATION

-30S2
=A2+011

102

0..2	1	0	2
1	x		
2	x		
3			x
4			x

CARRIERS

1...FEEDING
2...PARKING

-30S3
=A2+011

0..1	0	1
13		x
14		x
23		x
24		x

/25.3

-400A3 X1.E3 /400.5

-400A3 X1.E4 /400.5

-400A3 X1.E5 /400.5

-400A3 X1.E6 /400.5

-400A3 X1.E7 /400.5

@SYM

E 3

E 4

E 5

E 6

E 7

Revision	2.0	Drawn by	MLB
Date	18.10.16	Dr.ch.by	FMa
File:	BRWAA4185		

10-MGD BaNa 4
WAA0004185
Danang / Vietnam

Doppelmayr ®
Innova Patent GmbH
A-6960 WOLFURT / AUSTRIA

PC - INPUT

RETURN STATION

PARKING

=A2+011

Date	29.07.16
Sheet :	30
Cont.sheet:	31

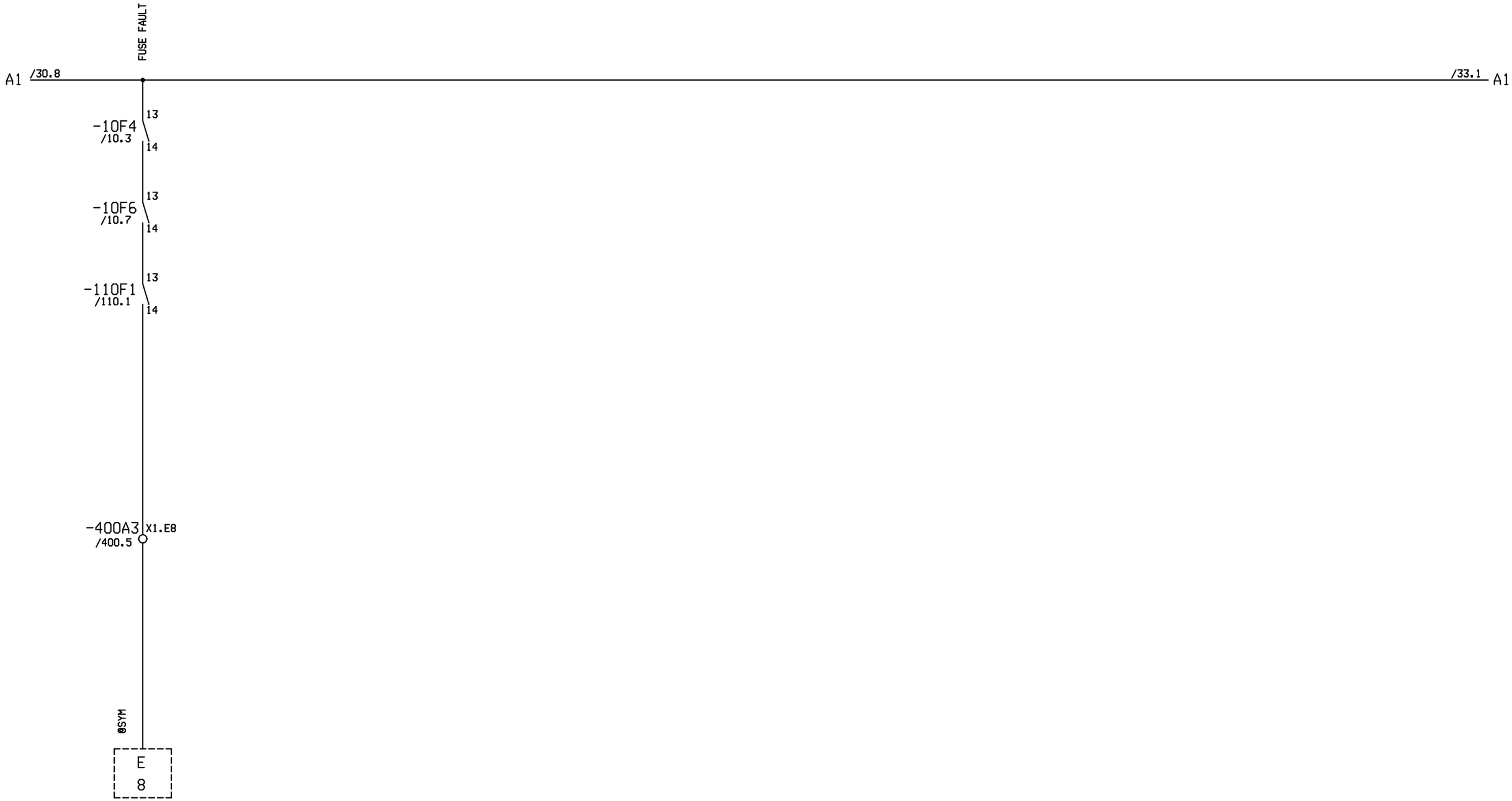

Revision	2.0	Drawn by	MLB
Date	18.10.16	Dr.ch.by	FMa
File:	BRWAA4185		

10-MGD BaNa 4
WAA0004185
Danang / Vietnam

Doppelmayr ®
Innova Patent GmbH
A-6960 WOLFURT / AUSTRIA

PC - INPUT

RETURN STATION

PARKING

=A2+011

Date	29.07.16
Sheet :	31
Cont.sheet:	33

STOP BUTTONS

A1 /31.8 — /61.4 A1

-25A1:S11 =A2+011/25.4
-25A1:S21 =A2+011/25.5

-33S1 =A2+011 — -X8 30 31 — R.M.C. 1
-33S2 =A2+0141 — -X8 32 33 — R.M.C. 2
-33S3 =A2+0142 — -X8 34 35 — R.M.C. 3
-33S4 =A2+0143 — -X8 36 37 — R.M.C. 4
-33S5 =A2+0144 — R.M.C. 5 OPTIONAL
-33S6 =A2+0145 — -X8 38 39 — R.M.C. 6 OPTIONAL
-33S7 =A2+0146 — -X8 40 41 — R.M.C. 7 OPTIONAL
-33S8 =A2+0147 — -X8 42 43 — R.M.C. 8 OPTIONAL
-33S9 =A2+0148 — -X8 44 45 — R.M.C. 9 OPTIONAL
-33S10 =A2+0149 — -X8 46 47 — R.M.C. 10 OPTIONAL
-33S11 =A2+0240 — -X8 48 49 — R.M.C. 11 OPTIONAL
-33S12 =A2+0241 — -X8 50 51 — R.M.C. 12 OPTIONAL
-33S13 =A2+0242 — -X8 52 53

-X8 54 55
-27S1:-21 =A2+011/27.2
-27S1:-31 =A2+011/27.2

PE

Revision	2.0	Drawn by	MLB
Date	18.10.16	Dr.ch.by	FMa
File:	BRWAA4185		

10-MGD BaNa 4
WAA0004185
Danang / Vietnam

Doppelmayr ®
Innova Patent GmbH
A-6960 WOLFURT / AUSTRIA

PC - INPUT

RETURN STATION | PARKING

=A2+011

Date	29.07.16
Sheet :	33
Cont.sheet:	50

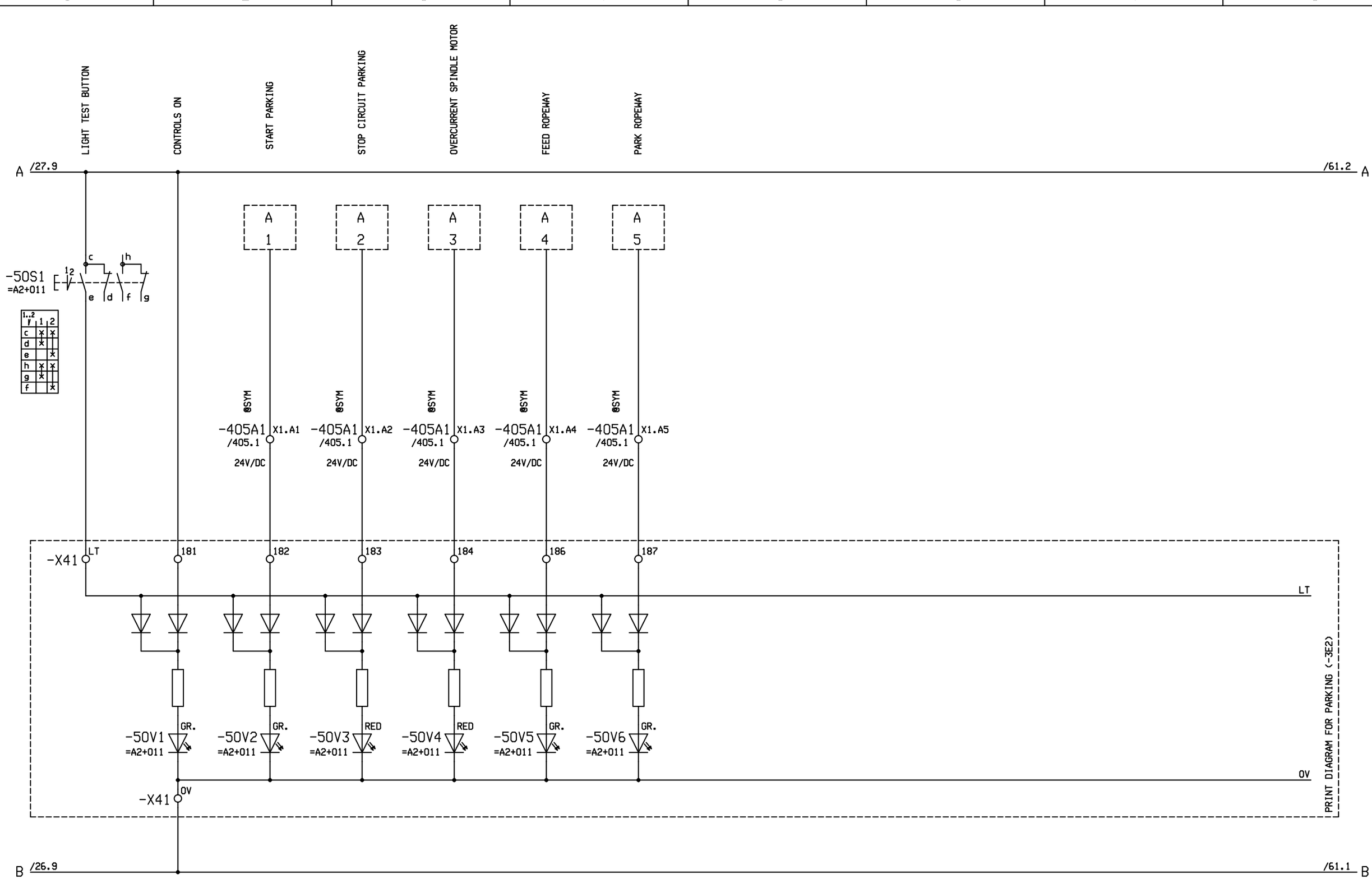

Revision	2.0	Drawn by	MLB
Date	18.10.16	Dr.ch.by	FMa
File:	BRWAA4185		

10-MGD BaNa 4
WAA0004185
Danang / Vietnam

Doppelmayr ®
Innova Patent GmbH
A-6960 WOLFURT / AUSTRIA

CONTROL LIGHTS

RETURN STATION | PARKING

=A2+011

Date	29.07.16
Sheet :	50
Cont.sheet:	61

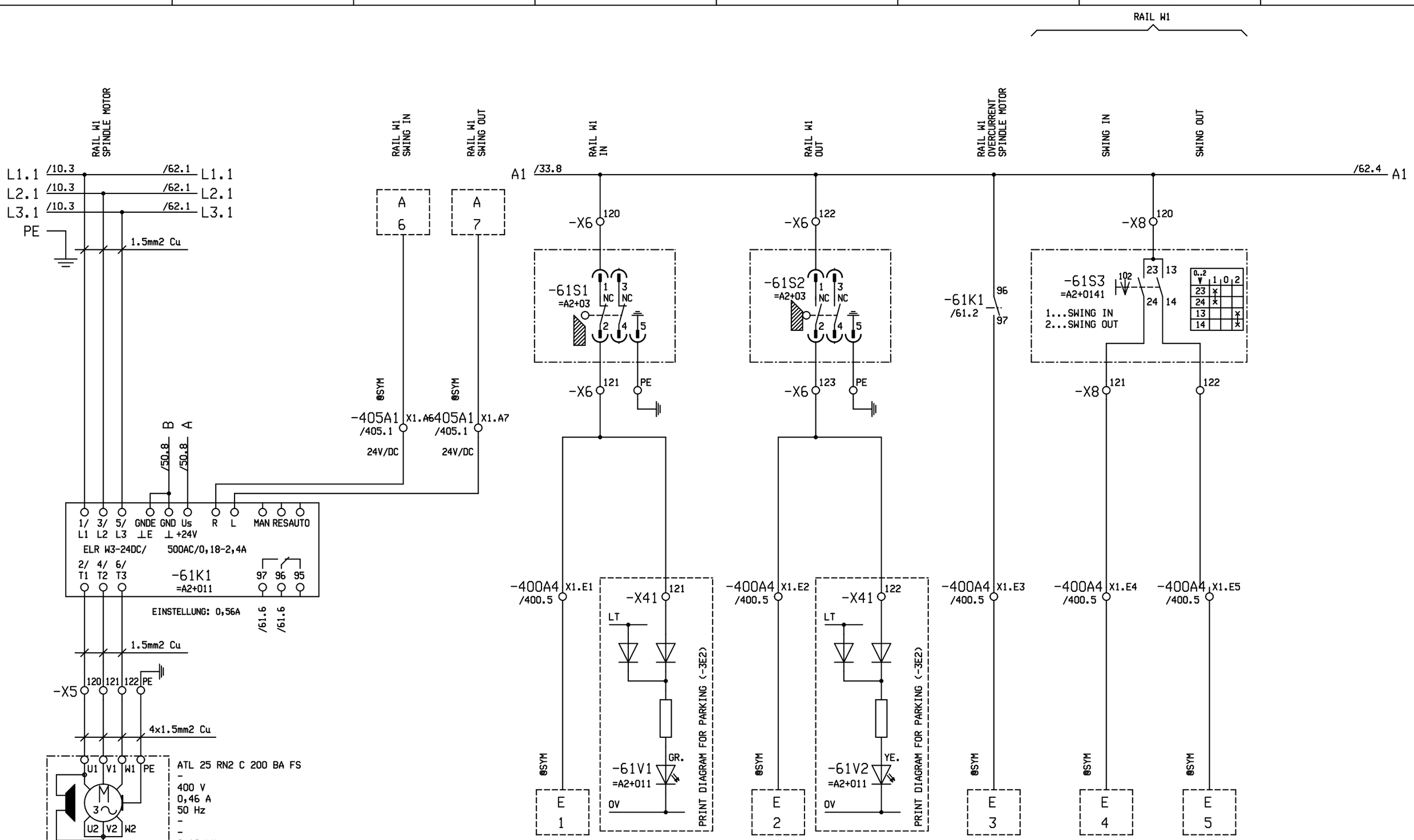

Revision	2.0	Drawn by	MLB
Date	18.10.16	Dr.ch.by	FMa

File: BRWAA4185

10-MGD BaNa 4
WAA0004185
Danang / Vietnam

Doppelmayr ®
Innova Patent GmbH
A-6960 WOLFURT / AUSTRIA

RAIL W1

RETURN STATION | PARKING

=A2+011

Date	18.10.16
Sheet :	61
Cont.sheet:	62

RAIL W2

RAIL W2 SPINDLE MOTOR

L1.1 /61.2 /63.1 L1.1
L2.1 /61.2 /63.1 L2.1
L3.1 /61.2 /63.1 L3.1
PE
1.5mm2 Cu

RAIL W2 SWING IN

A 8

RAIL W2 SWING OUT

A 1

-405A1 X1.A8 /405.1 24V/DC @SYM
-405A2 X1.A1 /405.2 24V/DC @SYM

/61.2 B
/61.2 A

1/ L1 | 3/ L2 | 5/ L3 | GNDE ⊥E | GND ⊥ | Us +24V | R | L | MAN | RESAUTO

ELR W3-24DC/ 500AC/0,18-2,4A

2/ T1 | 4/ T2 | 6/ T3 | -62K1 =A2+011 | 97 | 96 | 95

EINSTELLUNG: 0,56A

/62.6
/62.6

1.5mm2 Cu

-X5 130 131 132 PE

4x1.5mm2 Cu

U1 V1 W1 PE
M 3~
U2 V2 W2
-62M1 =A2+03
0,12kW

ATL 25 RN2 C 200 BA FS
-
400 V
0,46 A
50 Hz
-
-
0,12 kW
ID.11151004

RAIL W2 IN

A1 /61.8
-X6 130
-62S1 =A2+03 1 NC 3 NC 2 4 5
-X6 131 PE

RAIL W2 OUT

-X6 132
-62S2 =A2+03 1 NC 3 NC 2 4 5
-X6 133 PE

RAIL W2 OVERCURRENT SPINDLE MOTOR

-62K1 /62.1 96 97

SWING IN

-X8 130
-62S3 =A2+0142 102 23 13 24 14
1...SWING IN
2...SWING OUT
-X8 131

SWING OUT

0..2 | 1 | 0 | 2
23 | x
24 | x
13 | x
14 | x
-X8 132

/63.4 A1

-400A4 X1.E6 /400.5 @SYM
-X41 123
LT
-62V1 =A2+011 GR.
0V
PRINT DIAGRAM FOR PARKING (-3E2)
E 6

-400A4 X1.E7 /400.5 @SYM
-X41 124
LT
-62V2 =A2+011 YE.
0V
PRINT DIAGRAM FOR PARKING (-3E2)
E 7

-400A4 X1.E8 /400.5 @SYM
E 8

-400A5 X1.E1 /400.6 @SYM
E 1

-400A5 X1.E2 /400.6 @SYM
E 2

Revision	2.0	Drawn by	MLB
Date	18.10.16	Dr.ch.by	FMa

File: BRWAA4185

10-MGD BaNa 4
WAA0004185
Danang / Vietnam

Doppelmayr ®
Innova Patent GmbH
A-6960 WOLFURT / AUSTRIA

RAIL W2

RETURN STATION | PARKING

=A2+011

Date	18.10.16
Sheet :	62
Cont.sheet:	63

RAIL W3

RAIL W3 SPINDLE MOTOR

L1.1 /62.2 /64.1 L1.1
L2.1 /62.2 /64.1 L2.1
L3.1 /62.2 /64.1 L3.1
PE
1.5mm2 Cu
1.5mm2 Cu

B /62.1
A /62.2

1/ L1 | 3/ L2 | 5/ L3 | GNDE ⊥E | GND ⊥ | Us +24V | R | L | MAN | RESAUTO

ELR W3-24DC/ 500AC/0,18-2,4A

2/ T1 | 4/ T2 | 6/ T3 | -63K1 =A2+011 | 97 | 96 | 95

EINSTELLUNG: 0,56A

/63.6 /63.6

1.5mm2 Cu

-X5 140 141 142 PE

4x1.5mm2 Cu

U1 V1 W1 PE
U2 V2 W2
-63M1 =A2+03
0,12kW

ATL 25 RN2 C 200 BA FS
-
400 V
0,46 A
50 Hz
-
-
0,12 kW
ID.11151004

RAIL W3 SWING IN

A 2

ØSYM
-405A2 /405.2 X1.A2
24V/DC

RAIL W3 SWING OUT

A 3

ØSYM
-405A2 /405.2 X1.A3
24V/DC

RAIL W3 IN

A1 /62.8
-X6 140
-63S1 =A2+03 1 NC 3 NC 2 4 5
-X6 141 PE

RAIL W3 OUT

-X6 142
-63S2 =A2+03 1 NC 3 NC 2 4 5
-X6 143 PE

RAIL W3 OVERCURRENT SPINDLE MOTOR

-63K1 /63.1 96 97

SWING IN

-X8 140
-63S3 =A2+0142 102 23 13 24 14
1...SWING IN
2...SWING OUT
-X8 141

SWING OUT

0..2 | 1 | 0 | 2
23 | x
24 | x
13 | x
14 | x
-X8 142

/64.4 A1

-400A5 /400.6 X1.E3
-X41 125
LT
-63V1 =A2+011 GR.
0V
PRINT DIAGRAM FOR PARKING (-3E2)
ØSYM
E 3

-400A5 /400.6 X1.E4
-X41 126
LT
-63V2 =A2+011 YE.
0V
PRINT DIAGRAM FOR PARKING (-3E2)
ØSYM
E 4

-400A5 /400.6 X1.E5
ØSYM
E 5

-400A5 /400.6 X1.E6
ØSYM
E 6

-400A5 /400.6 X1.E7
ØSYM
E 7

Revision	2.0	Drawn by	MLB
Date	18.10.16	Dr.ch.by	FMa

File: BRWAA4185

10-MGD BaNa 4
WAA0004185
Danang / Vietnam

Doppelmayr ®
Innova Patent GmbH
A-6960 WOLFURT / AUSTRIA

RAIL W3

RETURN STATION | PARKING

=A2+011

Date	18.10.16
Sheet :	63
Cont.sheet:	64

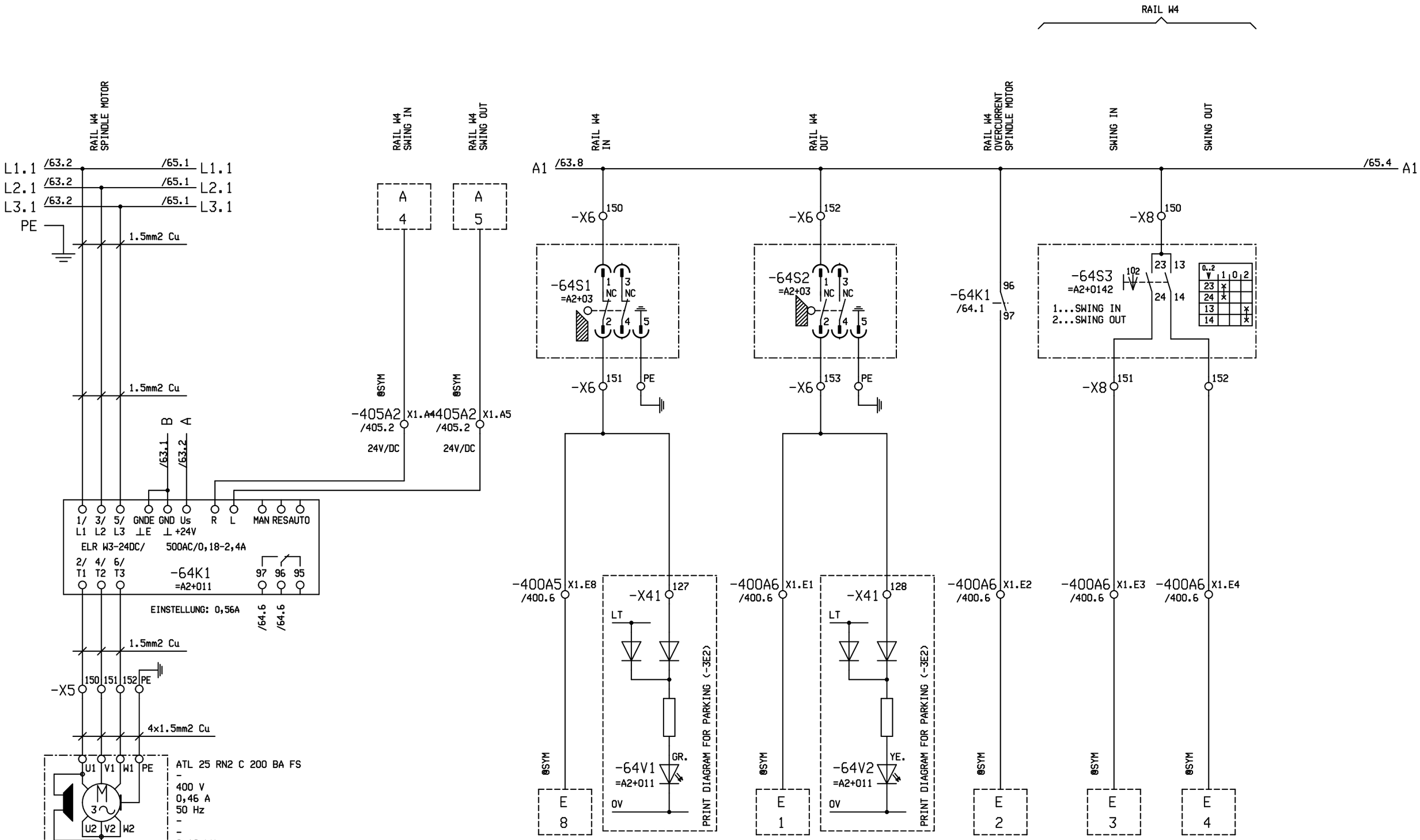

Revision	2.0	Drawn by	MLB
Date	18.10.16	Dr.ch.by	FMa
File:	BRWAA4185		

10-MGD BaNa 4
WAA0004185
Danang / Vietnam

Doppelmayr ®
Innova Patent GmbH
A-6960 WOLFURT / AUSTRIA

RAIL W4

RETURN STATION | PARKING

=A2+011

Date	18.10.16
Sheet :	64
Cont.sheet:	65

RAIL W5

RAIL W5 SPINDLE MOTOR

L1.1 /64.2 /66.1 L1.1
L2.1 /64.2 /66.1 L2.1
L3.1 /64.2 /66.1 L3.1
PE
1.5mm2 Cu
1.5mm2 Cu

/64.1 B
/64.2 A

1/ L1 | 3/ L2 | 5/ L3 | GNDE ⊥E | GND ⊥ | Us +24V | R | L | MAN | RESAUTO

ELR W3-24DC/ 500AC/0,18-2,4A

2/ T1 | 4/ T2 | 6/ T3 | -65K1 =A2+011 | 97 | 96 | 95

EINSTELLUNG: 0,56A

/65.6
/65.6

1.5mm2 Cu

-X5 160 161 162 PE

4x1.5mm2 Cu

U1 V1 W1 PE
M 3~
U2 V2 W2

-65M1 =A2+03
0,12kW

ATL 25 RN2 C 200 BA FS
-
400 V
0,46 A
50 Hz
-
-
0,12 kW
ID.11151004

RAIL W5 SWING IN

A 6

-405A2 X1.A6
/405.2
24V/DC
ØSYM

RAIL W5 SWING OUT

A 7

-405A2 X1.A7
/405.2
24V/DC
ØSYM

RAIL W5 IN

A1 /64.8
-X6 160
-65S1 =A2+03 1 NC 3 NC 2 4 5
-X6 161
PE

RAIL W5 OUT

-X6 162
-65S2 =A2+03 1 NC 3 NC 2 4 5
-X6 163
PE

RAIL W5 OVERCURRENT SPINDLE MOTOR

-65K1 /65.1 96 97

SWING IN

-X8 160
-65S3 =A2+0142 102 23 13 24 14
1...SWING IN
2...SWING OUT
-X8 161

SWING OUT

0..2 | 1 | 0 | 2
23 | x
24 | x
13 | x
14 | x
-X8 162

/66.4 A1

-400A6 X1.E5 /400.6
-X41 129
LT
-65V1 =A2+011 GR.
0V
PRINT DIAGRAM FOR PARKING (-3E2)
ØSYM
E 5

-400A6 X1.E6 /400.6
-X41 130
LT
-65V2 =A2+011 YE.
0V
PRINT DIAGRAM FOR PARKING (-3E2)
ØSYM
E 6

-400A6 X1.E7 /400.6
ØSYM
E 7

-400A6 X1.E8 /400.6
ØSYM
E 8

-400A7 X1.E1 /400.7
ØSYM
E 1

Revision	2.0	Drawn by	MLB
Date	18.10.16	Dr.ch.by	FMa
File:	BRWAA4185		

10-MGD BaNa 4
WAA0004185
Danang / Vietnam

Doppelmayr ®
Innova Patent GmbH
A-6960 WOLFURT / AUSTRIA

RAIL W5

RETURN STATION | PARKING

=A2+011

Date	18.10.16
Sheet :	65
Cont.sheet:	66

RAIL W6

RAIL W6 SPINDLE MOTOR

L1.1 /65.2 /67.1 L1.1
L2.1 /65.2 /67.1 L2.1
L3.1 /65.2 /67.1 L3.1
PE
1.5mm2 Cu
1.5mm2 Cu

/65.1 B
/65.2 A

1/ L1 | 3/ L2 | 5/ L3 | GNDE ⊥E | GND ⊥ | Us +24V | R | L | MAN | RESAUTO

ELR W3-24DC/ 500AC/0,18-2,4A

2/ T1 | 4/ T2 | 6/ T3 — -66K1 =A2+011 — 97 | 96 | 95

EINSTELLUNG: 0,56A

/66.6
/66.6

1.5mm2 Cu

-X5: 170 | 171 | 172 | PE

4x1.5mm2 Cu

U1 V1 W1 PE
M 3~
U2 V2 W2

-66M1 =A2+03
0,12kW

ATL 25 RN2 C 200 BA FS
-
400 V
0,46 A
50 Hz
-
-
0,12 kW
ID.11151004

RAIL W6 SWING IN: A 8
RAIL W6 SWING OUT: A 1

-405A2 X1.A8 /405.2 24V/DC ØSYM
-405A3 X1.A1 /405.3 24V/DC ØSYM

RAIL W6 IN

A1 /65.8
-X6 170
-66S1 =A2+03 1 NC 3 NC 2 4 5
-X6 171
PE

RAIL W6 OUT

-X6 172
-66S2 =A2+03 1 NC 3 NC 2 4 5
-X6 173
PE

RAIL W6 OVERCURRENT SPINDLE MOTOR

-66K1 /66.1 96 97

SWING IN / SWING OUT

/67.4 A1
-X8 170
-66S3 =A2+0144 102 23 13 24 14
1...SWING IN
2...SWING OUT

0..2	1	0	2
23	x		
24	x		
13			x
14			x

-X8 171
-X8 172

-400A7 X1.E2 /400.7 ØSYM — E 2
-X41 131
LT
-66V1 =A2+011 GR.
0V
PRINT DIAGRAM FOR PARKING (-3E2)

-400A7 X1.E3 /400.7 ØSYM — E 3
-X41 132
LT
-66V2 =A2+011 YE.
0V
PRINT DIAGRAM FOR PARKING (-3E2)

-400A7 X1.E4 /400.7 ØSYM — E 4
-400A7 X1.E5 /400.7 ØSYM — E 5
-400A7 X1.E6 /400.7 ØSYM — E 6

Revision	2.0	Drawn by	MLB
Date	18.10.16	Dr.ch.by	FMa
File:	BRWAA4185		

10-MGD BaNa 4
WAA0004185
Danang / Vietnam

Doppelmayr ®
Innova Patent GmbH
A-6960 WOLFURT / AUSTRIA

RAIL W6

RETURN STATION | PARKING

=A2+011

Date	18.10.16
Sheet :	66
Cont.sheet:	67

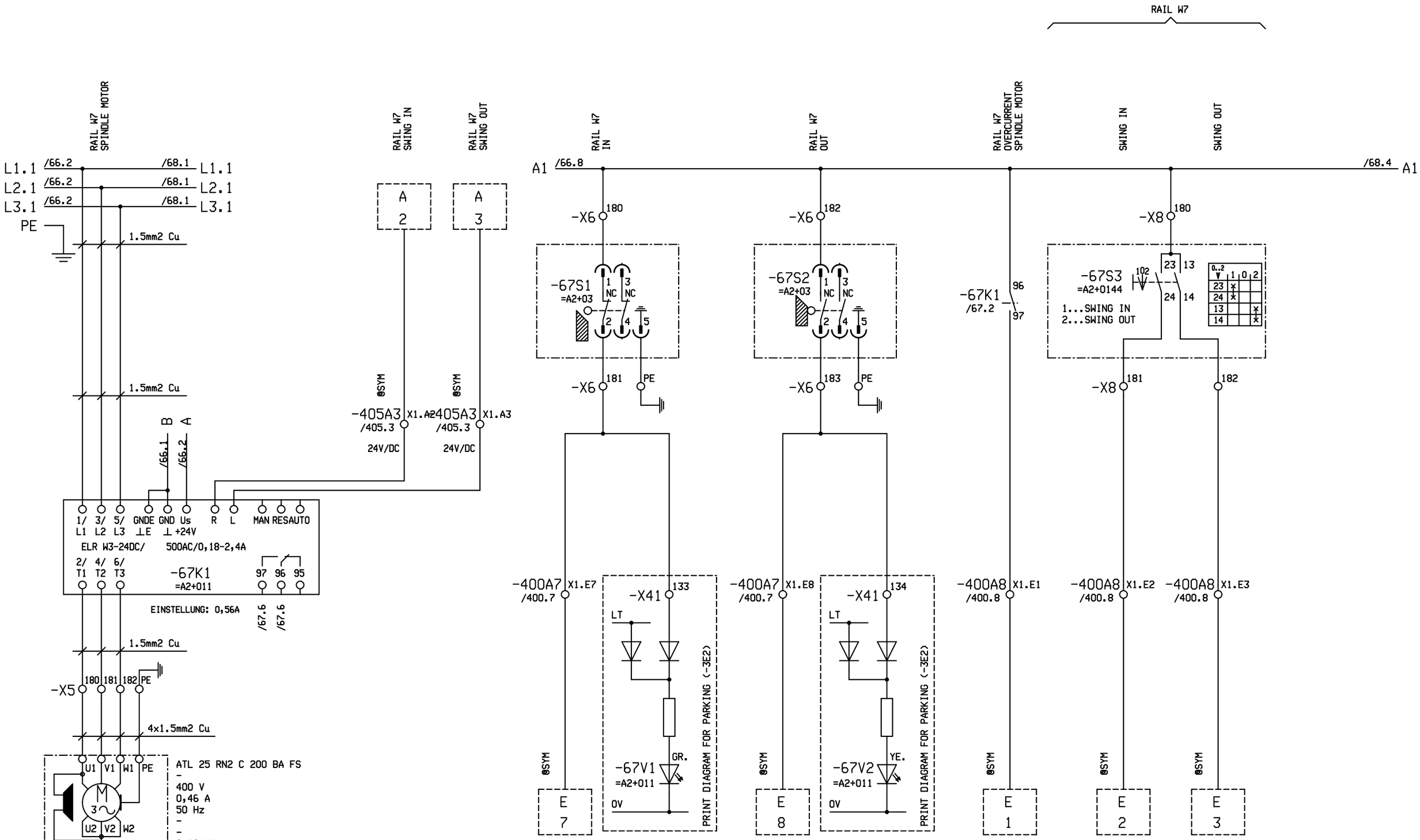

Revision	2.0	Drawn by	MLB
Date	18.10.16	Dr.ch.by	FMa
File:	BRWAA4185		

10-MGD BaNa 4
WAA0004185
Danang / Vietnam

Doppelmayr ®
Innova Patent GmbH
A-6960 WOLFURT / AUSTRIA

RAIL W7

RETURN STATION | PARKING

=A2+011

Date	18.10.16
Sheet :	67
Cont.sheet:	68

RAIL W8

RAIL W8 SPINDLE MOTOR

L1.1 /67.2 @PXR> L1.1
L2.1 /67.2 @PXR> L2.1
L3.1 /67.2 @PXR> L3.1
PE
1.5mm2 Cu
1.5mm2 Cu

1/ L1 | 3/ L2 | 5/ L3 | GNDE ⊥E | GND ⊥ | Us +24V | R | L | MAN | RESAUTO

ELR W3-24DC/ 500AC/0,18-2,4A

2/ T1 | 4/ T2 | 6/ T3 | -68K1 =A2+011 | 97 | 96 | 95

EINSTELLUNG: 0,56A

/68.6 /68.6

1.5mm2 Cu

-X5 190 191 192 PE

4x1.5mm2 Cu

U1 V1 W1 PE | U2 V2 W2 | -68M1 =A2+03 | 0,12kW

ATL 25 RN2 C 200 BA FS
-
400 V
0,46 A
50 Hz
-
-
0,12 kW
ID.11151004

/67.1 B
/67.2 A

RAIL W8 SWING IN

A 4

@SYM
-405A3 X1.A4
/405.3
24V/DC

RAIL W8 SWING OUT

A 5

@SYM
-405A3 X1.A5
/405.3
24V/DC

RAIL W8 IN

A1 /67.8
-X6 190
-68S1 =A2+03 1 NC 3 NC 2 4 5
-X6 191 PE

RAIL W8 OUT

-X6 192
-68S2 =A2+03 1 NC 3 NC 2 4 5
-X6 193 PE

RAIL W8 OVERCURRENT SPINDLE MOTOR

-68K1 /68.2 96 97

SWING IN

-X8 190
-68S3 =A2+0144 102 23 13 24 14
1...SWING IN
2...SWING OUT
-X8 191

SWING OUT

0..2 | 1 | 0 | 2
23 | x
24 | x
13 | x
14 | x
-X8 192

/112.4 A1

-400A8 X1.E4 /400.8
-X41 135
LT
-68V1 =A2+011 GR.
0V
PRINT DIAGRAM FOR PARKING (-3E2)
@SYM
E 4

-400A8 X1.E5 /400.8
-X41 136
LT
-68V2 =A2+011 YE.
0V
PRINT DIAGRAM FOR PARKING (-3E2)
@SYM
E 5

-400A8 X1.E6 /400.8
@SYM
E 6

-400A8 X1.E7 /400.8
@SYM
E 7

-400A8 X1.E8 /400.8
@SYM
E 8

Revision	2.0	Drawn by	MLB
Date	18.10.16	Dr.ch.by	FMa
File:	BRWAA4185		

10-MGD BaNa 4
WAA0004185
Danang / Vietnam

Doppelmayr ®
Innova Patent GmbH
A-6960 WOLFURT / AUSTRIA

RAIL W8

RETURN STATION | PARKING

=A2+011

Date	18.10.16
Sheet :	68
Cont.sheet:	110

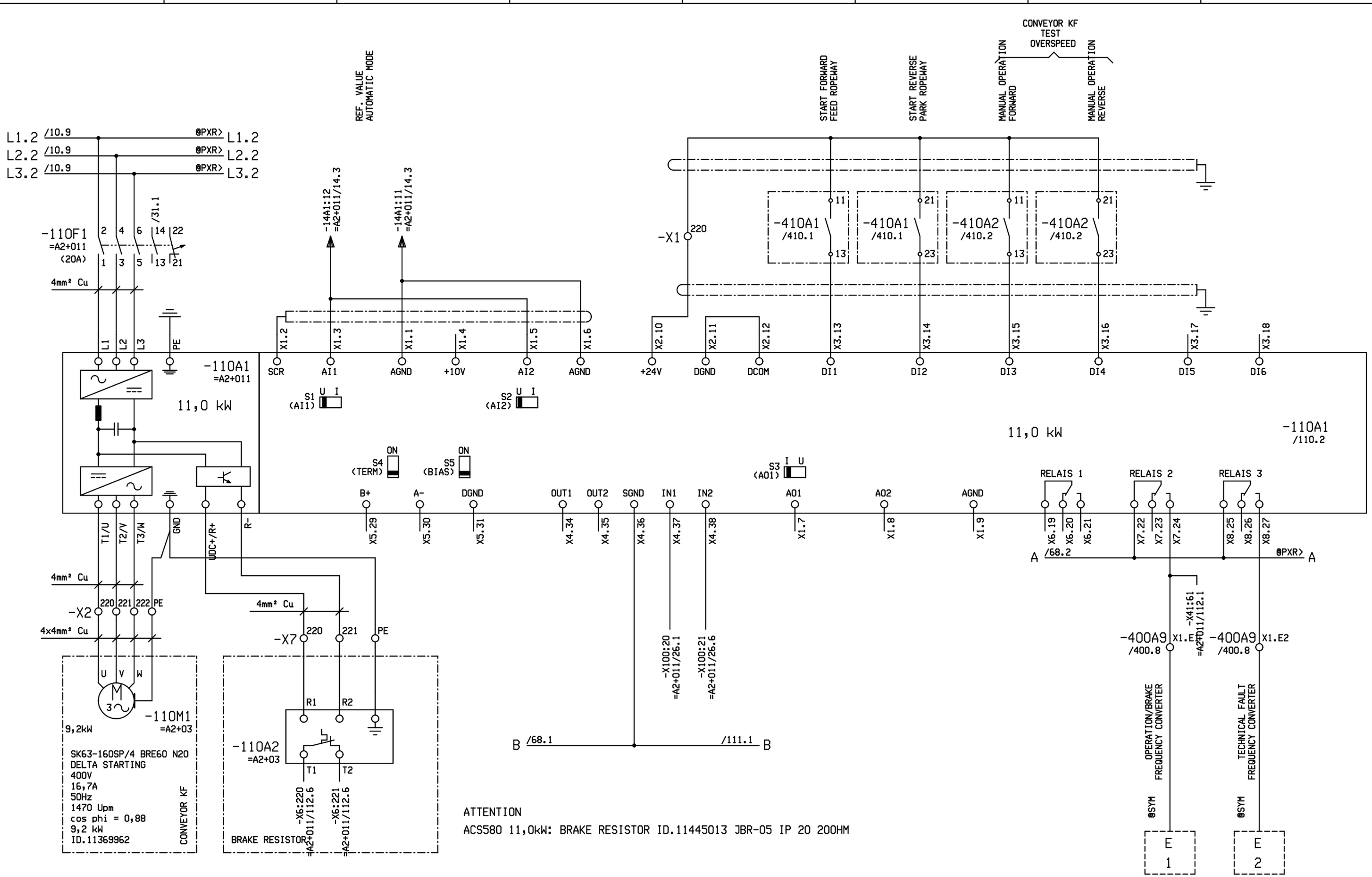

ATTENTION

ACS580 11,0kW: BRAKE RESISTOR ID.11445013 JBR-05 IP 20 200HM

Revision	2.0	Drawn by	MLB
Date	18.10.16	Dr.ch.by	FMa
File:	BRWAA4185		

10-MGD BaNa 4
WAA0004185
Danang / Vietnam

Doppelmayr ®
Innova Patent GmbH
A-6960 WOLFURT / AUSTRIA

CONVEYOR KF - FREQUENCY CONVERTER

RETURN STATION | PARKING

=A2+011

Date	18.10.16
Sheet :	110
Cont.sheet:	111

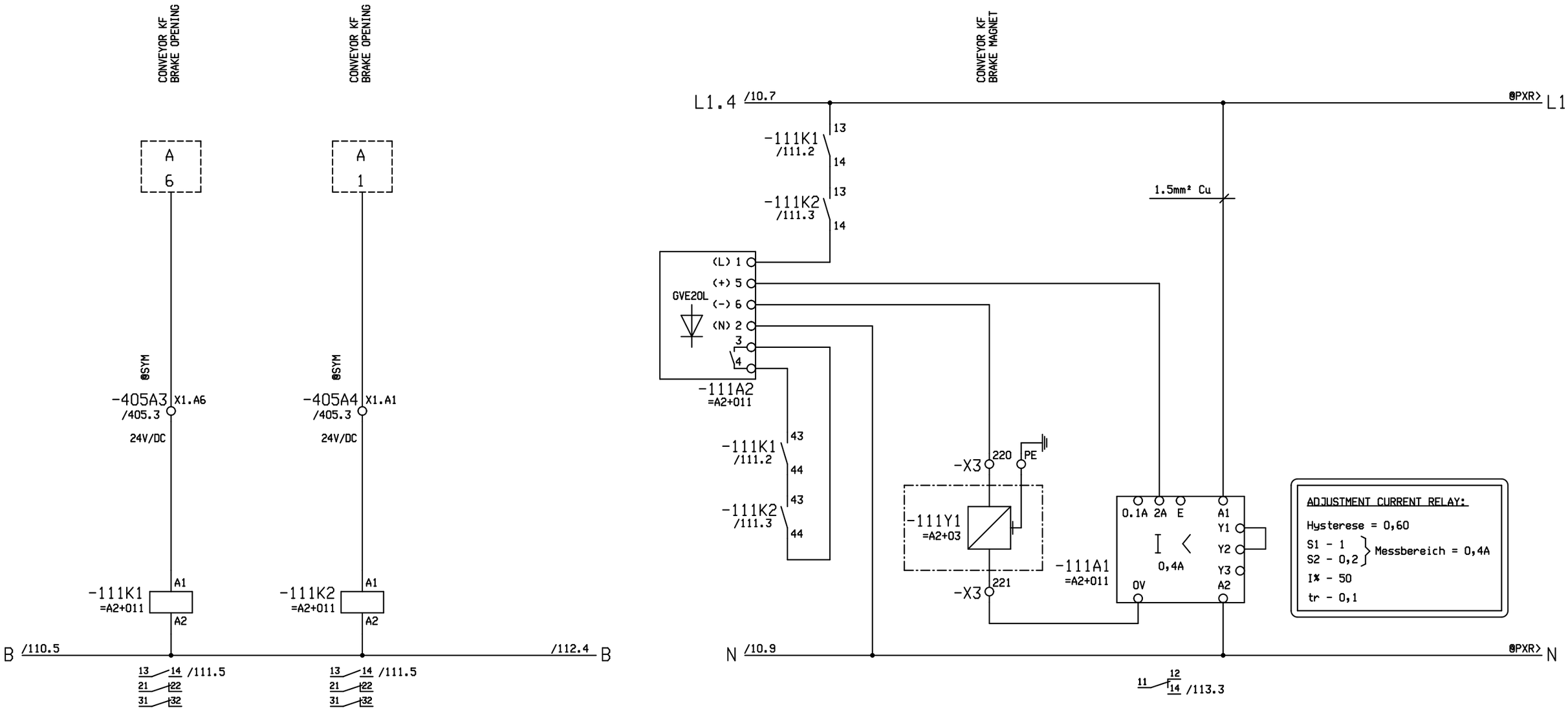

Revision	2.0	Drawn by	MLB
Date	18.10.16	Dr.ch.by	FMa
File:	BRWAA4185		

10-MGD BaNa 4
WAA0004185
Danang / Vietnam

Doppelmayr ®
Innova Patent GmbH
A-6960 WOLFURT / AUSTRIA

CONVEYOR KF - CONTROLS 230V / 24V

RETURN STATION | PARKING

=A2+011

Date	18.10.16
Sheet :	111
Cont.sheet:	112

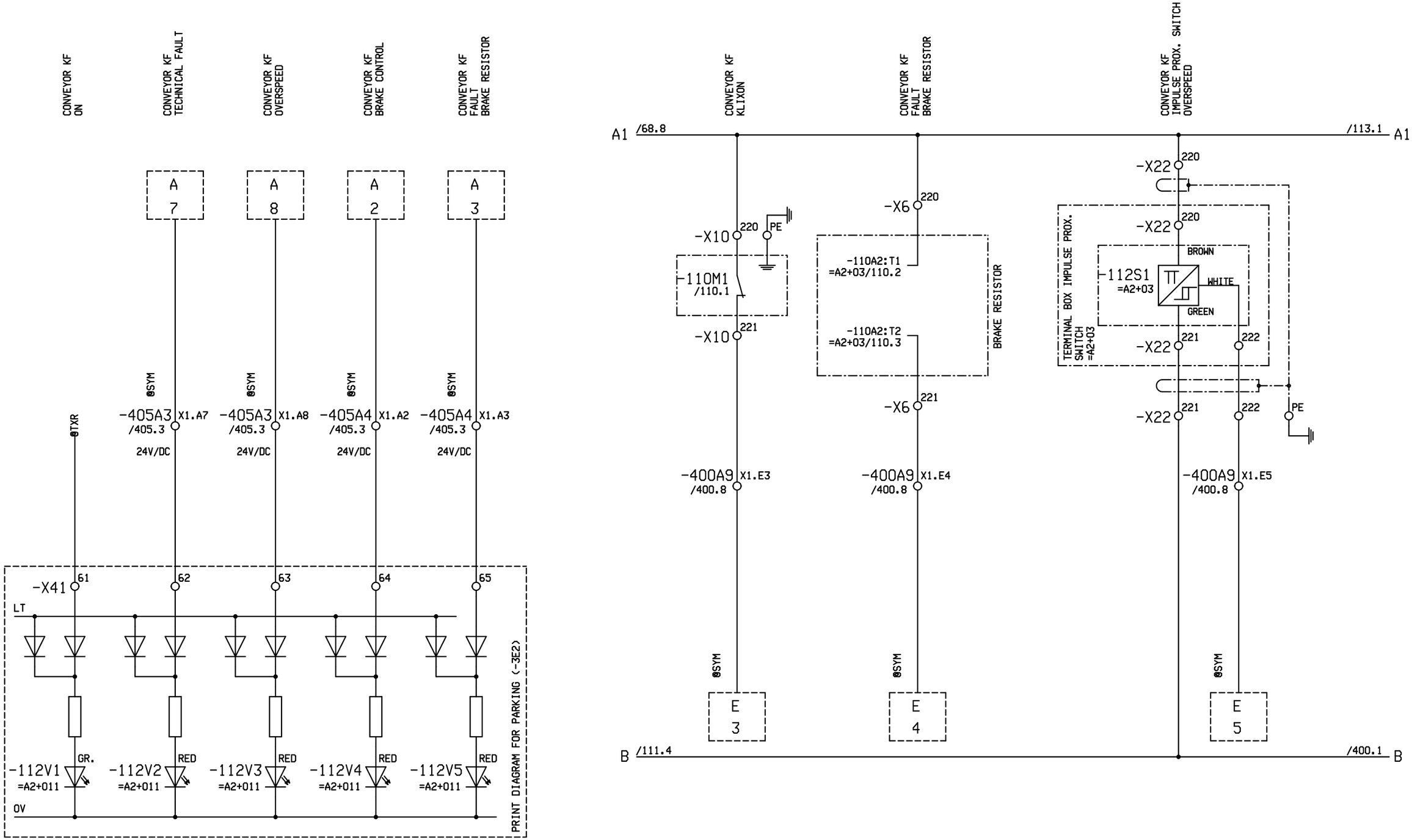

Revision	2.0	Drawn by	MLB
Date	18.10.16	Dr.ch.by	FMa
File:	BRWAA4185		

10-MGD BaNa 4
WAA0004185
Danang / Vietnam

Doppelmayr ®
Innova Patent GmbH
A-6960 WOLFURT / AUSTRIA

CONVEYOR KF - CONTROLS 24V

RETURN STATION | PARKING

=A2+011

Date	18.10.16
Sheet :	112
Cont.sheet:	113

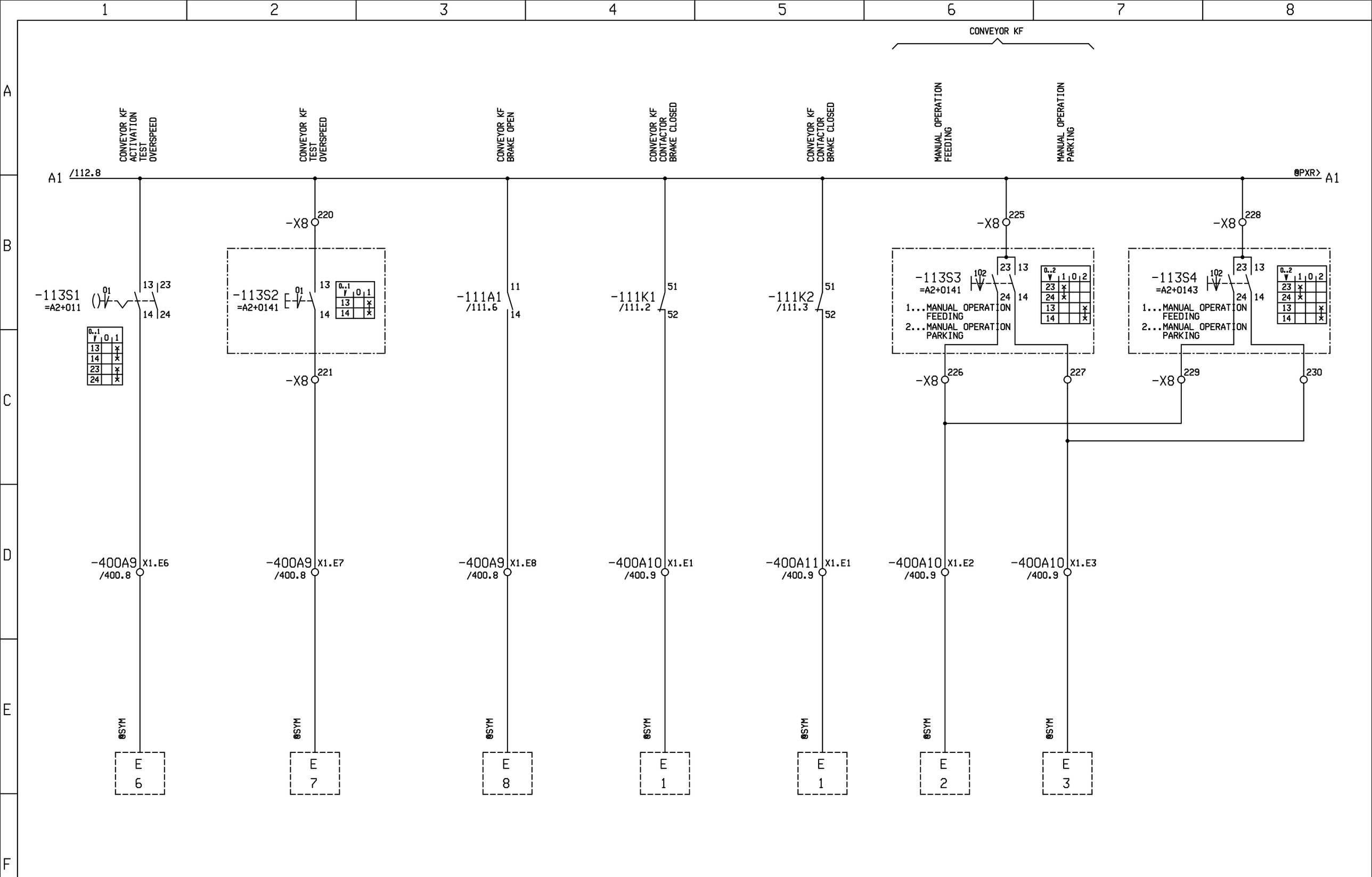

Revision	2.0	Drawn by	MLB
Date	18.10.16	Dr.ch.by	FMa
File:	BRWAA4185		

10-MGD BaNa 4
WAA0004185
Danang / Vietnam

Doppelmayr ®
Innova Patent GmbH
A-6960 WOLFURT / AUSTRIA

CONVEYOR KF - CONTROLS 24V

RETURN STATION | PARKING

=A2+011

Date	18.10.16
Sheet :	113
Cont.sheet:	400

A2 /25.9 — /405.3 A2

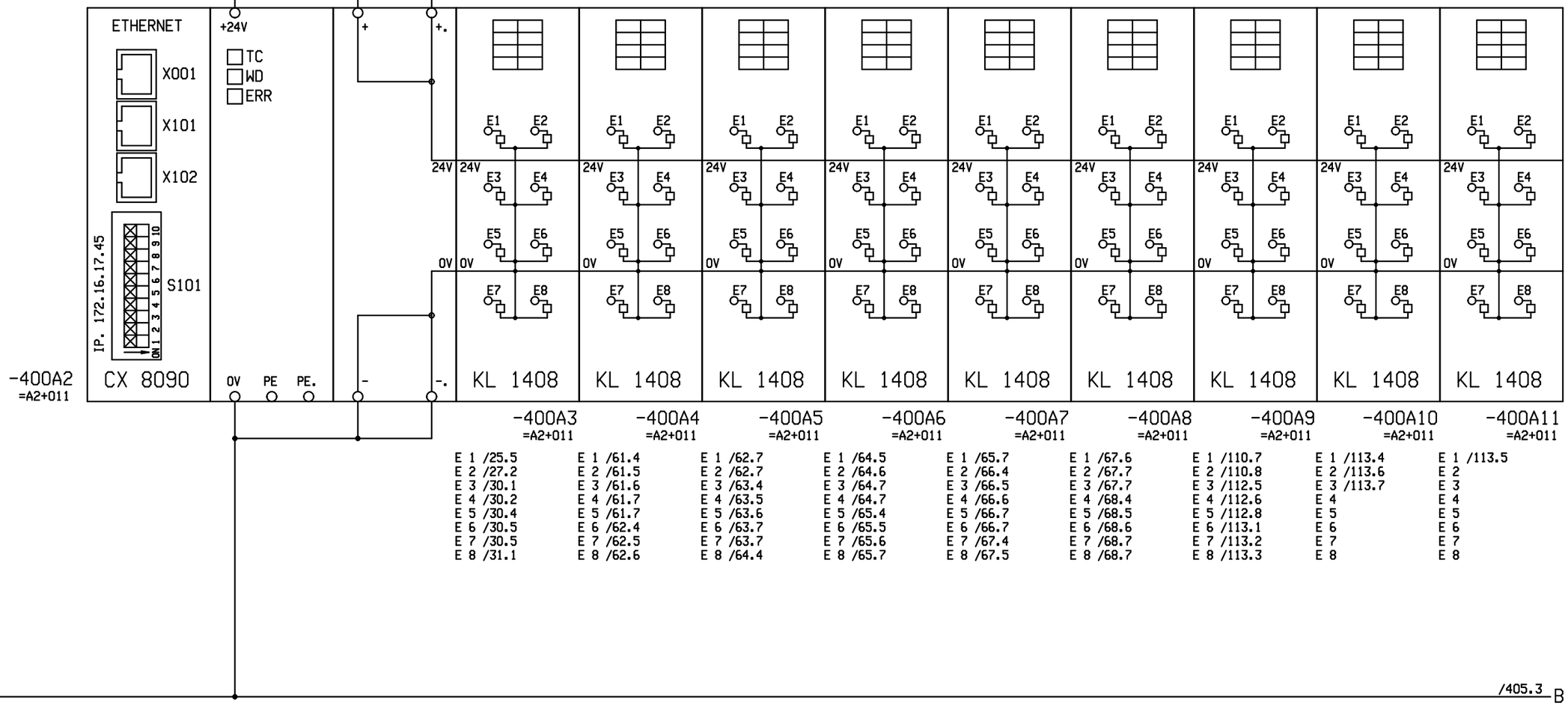

B /112.8 — /405.3 B

Revision	2.0	Drawn by	MLB
Date	18.10.16	Dr.ch.by	FMa
File:	BRWAA4185		

10-MGD BaNa 4
WAA0004185
Danang / Vietnam

Doppelmayr ®
Innova Patent GmbH
A-6960 WOLFURT / AUSTRIA

PLC-CENTRAL UNIT CX8090 / PC - INPUT KL1408

RETURN STATION | PARKING

=A2+011

Date	18.10.16
Sheet :	400
Cont.sheet:	405

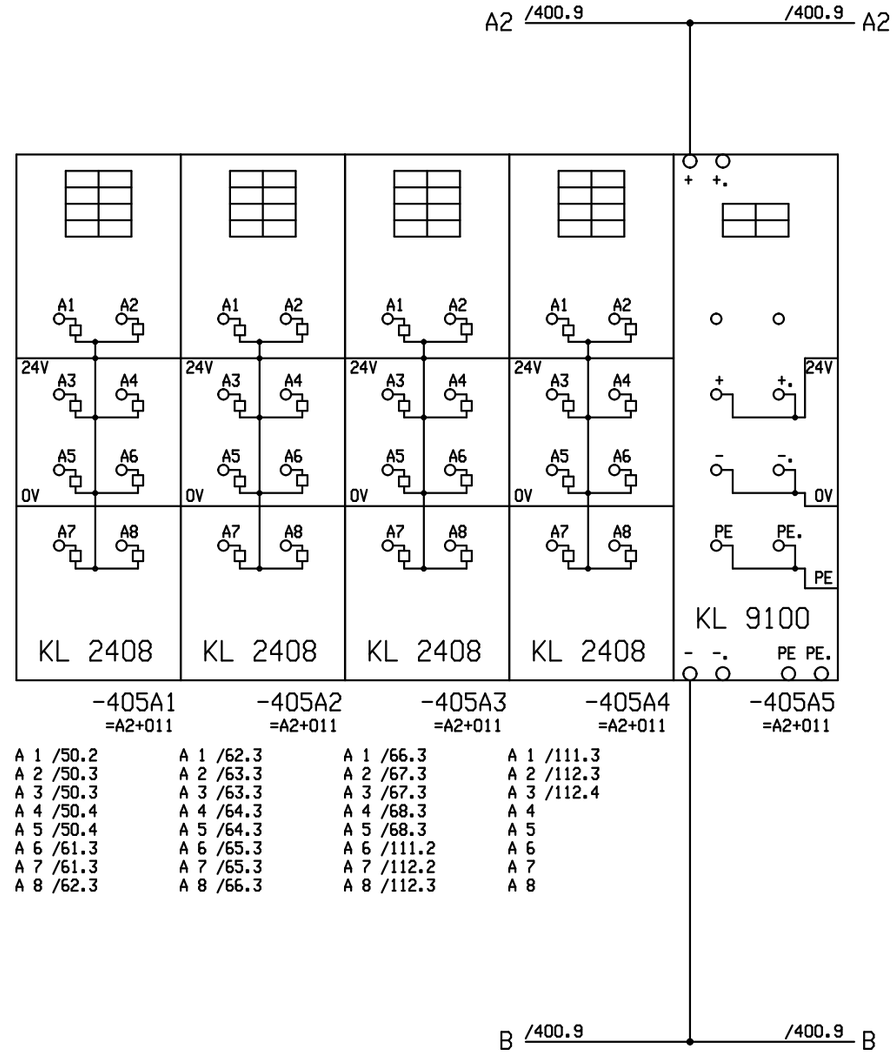

Revision	2.0	Drawn by	MLB
Date	18.10.16	Dr.ch.by	FMa
File:	BRWAA4185		

10-MGD BaNa 4
WAA0004185
Danang / Vietnam

Doppelmayr ®
Innova Patent GmbH
A-6960 WOLFURT / AUSTRIA

PC - OUTPUT KL2408

RETURN STATION | PARKING

=A2+011

Date	18.10.16
Sheet :	405
Cont.sheet:	410

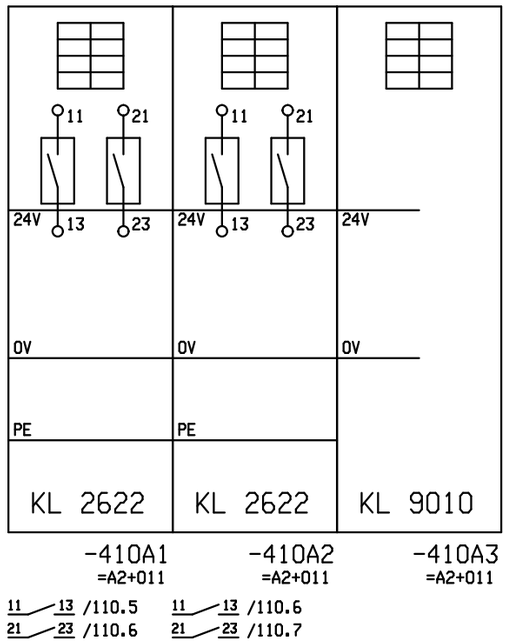

Revision	2.0	Drawn by	MLB
Date	18.10.16	Dr.ch.by	FMa
File:	BRWAA4185		

10-MGD BaNa 4
WAA0004185
Danang / Vietnam

Doppelmayr ®
Innova Patent GmbH
A-6960 WOLFURT / AUSTRIA

PC - OUTPUT KL2622

RETURN STATION | PARKING

=A2+011

Date	28.07.16
Sheet :	410
Cont.sheet:	~~OBLAT~~ +