INDEX

1/ 1 INDEX
2/ 2 INFORMATION
3/ 3 CABLE RESERVATION AERIAL CABLE
4/ 5 CONTROL PANEL DIMENSIONS
5/ 7 CONTROL PANEL DIMENSIONS
6/ 8 CONTROL PANEL DIMENSIONS
7/ 10 CONTROL BOX LIGHT
8/ 11 POWER SUPPLY 3X400/230V
9/ 13 THREE-PHASE MOTORS
10/ 14 OIL COOLER / THREE-PHASE MOTORS
11/ 16 FREQUENCY CONVERTER STATION CONVEYOR INCOMING
12/ 17 FREQUENCY CONVERTER STATION CONVEYOR OUTGOING
13/ 18 FREQUENCY CONVERTER PROCESSOR SPACING CURVED SECTION
14/ 20 POWER SUPPLY 24V/DC
15/ 21 CIRCUIT BREAKERS
16/ 22 CIRCUIT BREAKERS
17/ 23 LOW VOLTAGE 24V/DC
18/ 24 FUSE FAULT
19/ 25 CONNECTIONS TO AUX. DRIVE
20/ 26 CONNECTIONS TO AUX. DRIVE
21/ 27 CONNECTIONS TO AUX. DRIVE
22/ 28 CONNECTIONS TO AUX. DRIVE
23/ 39 CONNECTIONS FREQUENCY CONVERTER TANDEM 1
24/ 40 CONNECTIONS FREQUENCY CONVERTER TANDEM 1
25/ 41 CONNECTIONS FREQUENCY CONVERTER TANDEM 2
26/ 42 CONNECTIONS FREQUENCY CONVERTER TANDEM 2
27/ 43 INPUT PLC BECKHOFF - LUBRICATION SYSTEM
28/ 44 GEAR BOX TEMP.
29/ 45 OUTPUT PLC BECKHOFF - OIL COOLER / OIL PUMP
30/ 46 CONNECTIONS FREQUENCY CONV. - PANEL TANDEM 1
31/ 47 CONNECTIONS FREQUENCY CONV. - PANEL TANDEM 1
32/ 48 CONNECTIONS FREQUENCY CONV. - PANEL TANDEM 2
33/ 49 CONNECTIONS FREQUENCY CONV. - PANEL TANDEM 2
34/ 50 RESET BUTTONS
35/ 56 RUN BUTTONS
36/ 60 OUTPUT PLC BECKHOFF - TYRE CONVEYOR
37/ 61 INPUT PLC BECKHOFF - BUTTONS - TYRE CONVEYOR
38/ 62 OUTPUT PLC BECKHOFF - CONTROL LIGHTS - TYRE CONVEYOR
39/ 63 INPUT PLC BECKHOFF - OVERCURRENT - TYRE CONVEYOR
40/ 64 EMERGENCY BRAKE
41/ 65 BRAKE HYDRAULICS
42/ 66 BRAKE HYDRAULICS
43/ 67 LIMIT SWITCH BRAKE
44/ 68 BRAKE HYDRAULICS
45/ 69 BRAKE HYDRAULICS
46/ 70 SLOW 1
47/ 73 SLOW 2
48/ 75 MOTOR TACHO
49/ 76 TACHO
50/ 80 ROPE POSITION MONITORING
51/ 81 ROPE POSITION MONITORING
52/ 82 ROPE POSITION MONITORING
53/ 84 ROPE POSITION MONITORING
54/ 85 WIND WARNING
55/ 86 WIND WARNING
56/ 95 CONNECTIONS RETURN STATION FIBER OPTIC CABLE - CONVERTER RECEIVER
57/ 96 CONNECTIONS RETURN STATION FIBER OPTIC CABLE - CONVERTER TRANSMITTER
58/ 97 CONNECTIONS RETURN STATION FIBER OPTIC CABLE - CONVERTER TRANSMITTER
59/103 FIBER OPTIC CABLE - CONVERTER TRANSMITTER RECEIVER
60/104 FIBER OPTIC CABLE - CONVERTER
61/105 TELEPHONE
62/106 TELEPHONE
63/107 SIGNAL BUTTONS
64/108 SIGNAL
65/111 MAINTENANCE LOCK OUT
66/120 STOP BUTTONS
67/122 EMERG. STOP BUTTONS
68/123 STOP EB BUTTONS
69/125 RELAY
70/126 RELAY
71/127 RELAY
72/129 RELAY
73/130 STATION CONVEYOR
74/131 STATION CONVEYOR
75/132 STATION CONVEYOR
76/133 STATION CONVEYOR
77/134 STATION CONVEYOR
78/160 CONTROL LIGHTS
79/162 CONTROL LIGHTS
80/168 CONTROL LIGHTS
81/169 CONTROL LIGHTS
82/170 CONTROL LIGHTS
83/175 LOUDSPEAKER EQUIPMENT
84/180 MOTORS - TYRE CONVEYOR DECELERATOR
85/182 MOTORS - TYRE CONVEYOR CURVED SECTION
86/183 MOTORS - TYRE CONVEYOR CURVED SECTION
87/184 MOTORS - TYRE CONVEYOR ACCELERATOR
88/197 IN-OUTPUT MODULE BECKHOFF
89/198 ANALOG INPUT TERMINAL BECKHOFF WIND MEASURING SYSTEM
90/200 POWER SUPPLY PC-SYSTEM
91/201 POWER SUPPLY PC-SYSTEM
92/202 SAFETYBUS EXTENSION EW33
93/205 ANALOG INPUT (FS)
94/209 INPUT PLC (FS)
95/210 INPUT PLC (FS)
96/211 INPUT PLC (FS)
97/212 INPUT PLC (FS)
98/213 INPUT PLC (FS)
99/214 INPUT PLC (FS)
100/215 INPUT PLC (FS)
101/216 INPUT PLC (FS)
102/217 INPUT PLC (FS)
103/218 INPUT PLC (FS)
104/219 OUTPUT PLC (FS)
105/220 OUTPUT PLC (FS)
106/221 INPUT PLC (FS)
107/222 INPUT PLC (FS)
108/223 INPUT PLC (FS)
109/224 INPUT PLC (FS)
110/225 INPUT PLC (FS)
111/226 INPUT PLC (FS)
112/227 OUTPUT PLC (FS)
113/228 OUTPUT PLC (FS)
114/229 INPUT PLC (FS)
115/230 INPUT PLC (FS)
116/231 INPUT PLC (FS)
117/232 INPUT PLC (FS)
118/233 INPUT PLC (FS)
119/234 OUTPUT PLC (FS)
120/235 INPUT PLC (FS)
121/236 INPUT PLC (FS)
122/237 INPUT PLC (ST)
123/238 INPUT PLC (ST)
124/239 INPUT PLC (ST)
125/240 INPUT PLC (ST)
126/241 INPUT PLC (ST)
127/242 INPUT PLC (ST)
128/243 INPUT PLC (ST)
129/244 INPUT PLC (ST)
130/245 OUTPUT PLC (ST)
131/246 OUTPUT PLC (ST)
132/247 OUTPUT PLC (ST)
133/248 OUTPUT PLC (ST)
134/249 OUTPUT PLC (ST)
135/250 OUTPUT PLC (ST)
136/251 OUTPUT PLC (ST)
137/252 OUTPUT PLC (ST)
138/253 INPUT PLC (ST)
139/254 INPUT PLC (ST)
140/255 INPUT PLC (ST)
141/256 INPUT PLC (ST)
142/257 INPUT PLC (ST)
143/258 INPUT PLC (ST)
144/259 INPUT PLC (ST)
145/260 INPUT PLC (ST)
146/261 ANALOG IN/OUTPUT PLC (ST)
147/262 ANALOG IN/OUTPUT PLC (ST)
148/263 ANALOG INPUT TERMINAL BECKHOFF - TORQUE MOTOR
149/265 ANALOG INPUT TERMINAL BECKHOFF WIND MEASURING SYSTEM
150/266 ANALOG INPUT TERMINAL BECKHOFF WIND MEASURING SYSTEM
151/267 ANALOG INPUT TERMINAL BECKHOFF WIND MEASURING SYSTEM
152/269 INPUT PLC BECKHOFF - TORQUE SUPPORT INCOMING
153/270 INPUT PLC BECKHOFF - TORQUE SUPPORT OUTGOING
154/271 INPUT PLC BECKHOFF - PROCESSOR SPACING CURVED SECTION
155/272 SET VALUE POTENTIOMETER
156/281 SAFETYBUS EXTENSION E33.16 - E33.19 - TYRE CONVEYOR
157/284 SAFETYBUS EXTENSION PAW 33.xx
158/285 SAFETYBUS EXTENSION E33.0 - E33.3 - TYRE CONVEYOR
159/286 SAFETYBUS EXTENSION E33.4 - E33.7 - TYRE CONVEYOR
160/287 SAFETYBUS EXTENSION E33.8 - E33.11 - TYRE CONVEYOR
161/288 SAFETYBUS EXTENSION E33.4 - E33.7 - TYRE CONVEYOR
162/296 SAFETYBUS EXTENSION E33.20 - E33.23 - BRAKE CONTROL
163/297 SAFETYBUS ERWEITERUNG E33.24 - E33.27 - BREMSSTEUERUNG
164/298 SAFETYBUS EXTENSION A33.22 - A33.25 - BRAKE CONTROL
165/328 FIBER OPTIC CABLE - FIBER PATCH
166/329 MODEM
167/330 TOUCH SCREEN
168/350 RPD SUPPLY VOLTAGE
169/351 RPD RELAY
170/360 RPD CENTRAL UNIT PSS3047-3
171/361 RPD OUTPUT PLC PSS 3047-3
172/363 RPD INPUT PLC PSS 3047-3
173/366 RPD LEVEL CONVERTER + FILTER
174/370 RPD ON LINE
175/382 RPD JUNCTION DIAGRAM DRIVE TOP
176/383 RPD JUNCTION DIAGRAM DRIVE TOP
177/384 RPD JUNCTION DIAGRAM DRIVE TOP
178/385 RPD JUNCTION DIAGRAM DRIVE TOP
179/386 RPD JUNCTION DIAGRAM DRIVE TOP
180/387 RPD JUNCTION DIAGRAM DRIVE TOP
181/388 RPD JUNCTION DIAGRAM DRIVE TOP
182/389 RPD JUNCTION DIAGRAM DRIVE TOP
183/395 RPD SENSOR

Dieses Dokument ist geistiges Eigentum der Doppelmayr Seilbahnen GmbH und übertragen per 31.12. des Erstellungsjahres an die Innova Patent GmbH. Alle technischen Angaben und Zeichnungen sind urheberrechtlich geschützt. Der Inhalt dieses Dokuments darf ohne schriftliche Genehmigung der Doppelmayr Seilbahnen GmbH auch nicht auszugsweise an Dritte weitergegeben werden.

This document is the intellectual property of Doppelmayr Seilbahnen GmbH and will be transferred to Innova Patent GmbH on 31.12. of the year of creation. All technical data and drawings are protected by copyright. The content of this document, including extracts, may not be passed on to third parties without written approval from Doppelmayr Seilbahnen GmbH.

LOCATION:

A1 ... DRIVE STATION
A2 ... RETURN STATION
A3 ... MIDDLE STATION
A10... BOTTOM STATION

01 ... CONTROL PANEL
02 ...
03 ... STATION
04 ... REMOTE CONTROL
05 ... TERMINAL BOX EMERGENCY DRIVE
06 ... LIFT LINE / TOWERS
07 ... LIGHTNING PROTECTION BOX
08 ... OIL COOLER
09 ... AUXILIARY DRIVE (ADDITIONAL HYDR.)
010... HYDR. TENSIONING
011... PARKING
012... OPENING-CLOSING MECHANISM
013... EMERGENCY DRIVE
014...
015... SCR UNIT
016... POWER SUPPLY UNIT SCR-DRIVE
017...
018... LOADING CARPET
019...
020... LOADING GATE
021... TERMINAL BOX LOADING GATE
022... HYDRAULIC AGGREGATE LOADING GATE
023... LOADING GATE
024...
025... BATTERY PANEL
026... LOW VOLTAGE DISTRIBUTION
027...
028...
029...
030... LOUDSPEAKER EQUIPMENT
031... TERMINAL BOX TB1
0131.. TERMINALBOX TB11
032... TERMINAL BOX TB2
0132.. TERMINALBOX TB12
033... TERMINAL BOX TB3
034... TERMINAL BOX TB4
0134.. TERMINAL BOX "TB 14"
035... TERMINAL BOX TB5
0135.. TERMINAL BOX "TB 15"
036... TERMINAL BOX TB6
037... TERMINAL BOX TB7
038... TERMINAL BOX TB8
039... TERMINAL BOX TB9
040...
041... R.M.C. 1
042... R.M.C. 2
043... R.M.C. 3
044... R.M.C. 4 (INCOMING)
045... R.M.C. 5 (OUTGOING)
046...
047...
048...
049...
050... DESKTOP CONTROL PANEL CONTROL ROOM 1
051... TELEPHONE CONNECTOR MACHINE ROOM
052... TELEPHONE CONNECTOR THYRISTOR ROOM
055... DESKTOP CONTROL PANEL CONTROL ROOM 2
080... TERMINAL BOX TB80 STATION PARKING DECELERATOR
081... TERMINAL BOX TB81 STATION PARKING ACCELERATOR
0100.. TERMINAL BOX TENSIONING AGGREGATE
0101.. HYDR. TENSIONING UNIT
0102.. TERMINAL BOX LOAD CELL
0103.. LOAD CELL
0500.. BRAKE HYDRAULICS
0502.. TERMINAL BOX BRAKE HYDRAULICS

TERMINAL STRIP:

X1 ... POWER SUPPLY 24V/DC
X2 ... THREE-PHASE MOTORS
X3 ... LIGHTING
X4 ... POWER SUPPLY (AC)
X5 ... CONNECTIONS THYRISTOR PANEL
X6 ... LIMIT SWITCHES
X7 ... BRAKE HYDRAULICS
X8 ... REMOTE CONTROLS
X9 ... HYDR. TENSIONING - TERMINAL BOX TENSIONING AGGREGATE
X10... LOUDSPEAKER EQUIPMENT
X11...
X12...
X13...
X14...
X15...
X16... LIFT LINE (TOWERS)
X17... LIFT LINE (SIGNALS)
X18... ON LINE TELEPHONE
X19... CONNECTIONS TO AUX. DRIVE
X20...
X21... LIMIT SWITCHES FOR ANTI COLLISION SYSTEM
X22... PROXIMITY SWITCHES (FILTER TERMINALS)
X23... CONNECTIONS TO PARKING CONTROLS
X24...
X25... MEASURING CABLES
X26... MEASURING CABLES
X27... CONNECTION TO LOADING CARPET
X28...
X29...
X41... PRINT MAIN CONTROLS
X60... MAGNETIC CLUTCH / SPINDLE MOTOR
X80... STATION PARKING
X82... PROXIMITY SWITCHES (FILTER TERMINALS) STATION PARKING

CROSS SECTIONS

TYPE OF CABLE :
F-2YA2Y 20x2x0,8

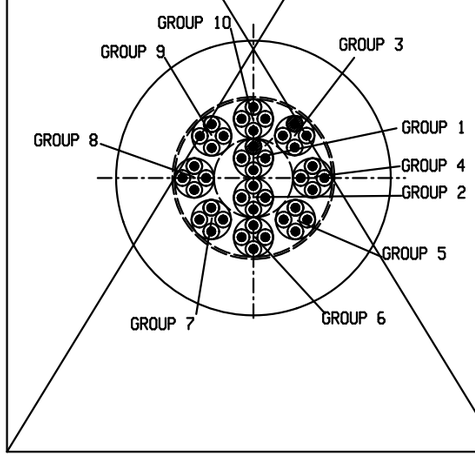

TYPE OF CABLE :
F-2YA2Y 30x2x0,8

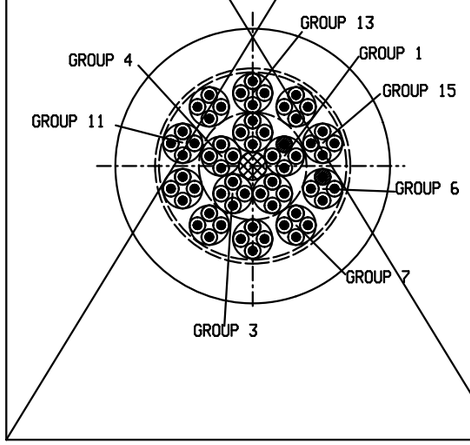

TYPE OF CABLE :
F-2YA2Y 40x2x0,5

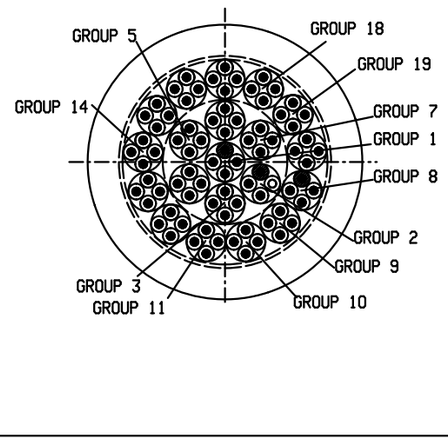

VIEW FROM DRIVE STATION :
CLOCKWISE!

F-2YA2Y 40x2x0,5:	GROUP 1/2/8
~~F-2YA2Y 30x2x0,8:~~	~~GROUP 1/6~~
~~F-2YA2Y 20x2x0,8:~~	~~GROUP 1/3~~
~~F-2YA2Y 10x2x0,8:~~	~~GROUP 1~~
~~F-2YA2Y 6x2x0,8:~~	~~GROUP 1~~

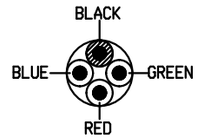

F-2YA2Y 40x2x0,5:	GROUP 3/4/5/6/7/9/10/11/12/13/14/15/16/17/18/19/20
~~F-2YA2Y 30x2x0,8:~~	~~GROUP 2/3/4/5/7/8/9/10/11/12/13/14/15~~
~~F-2YA2Y 20x2x0,5:~~	~~GROUP 2/4/5/7/8/9/10~~
~~F-2YA2Y 10x2x0,8:~~	~~GROUP 2/3/4/5~~
~~F-2YA2Y 6x2x0,8:~~	~~GROUP 2/3~~

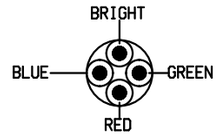

Revision	2.0	Drawn by	SST
Date	19.01.17	Dr.ch.by	FMa

File: ANWAA4185

10-MGD BaNa4
WAA0004185
DANANG / VIETNAM

Doppelmayr ®
Innova Patent GmbH
A-6960 WOLFURT / AUSTRIA

CABLE RESERVATION AERIAL CABLE

DRIVE STATION | LV-CONTROL

=A1+01

Date	10.05.17
Sheet :	3
Cont.sheet:	5

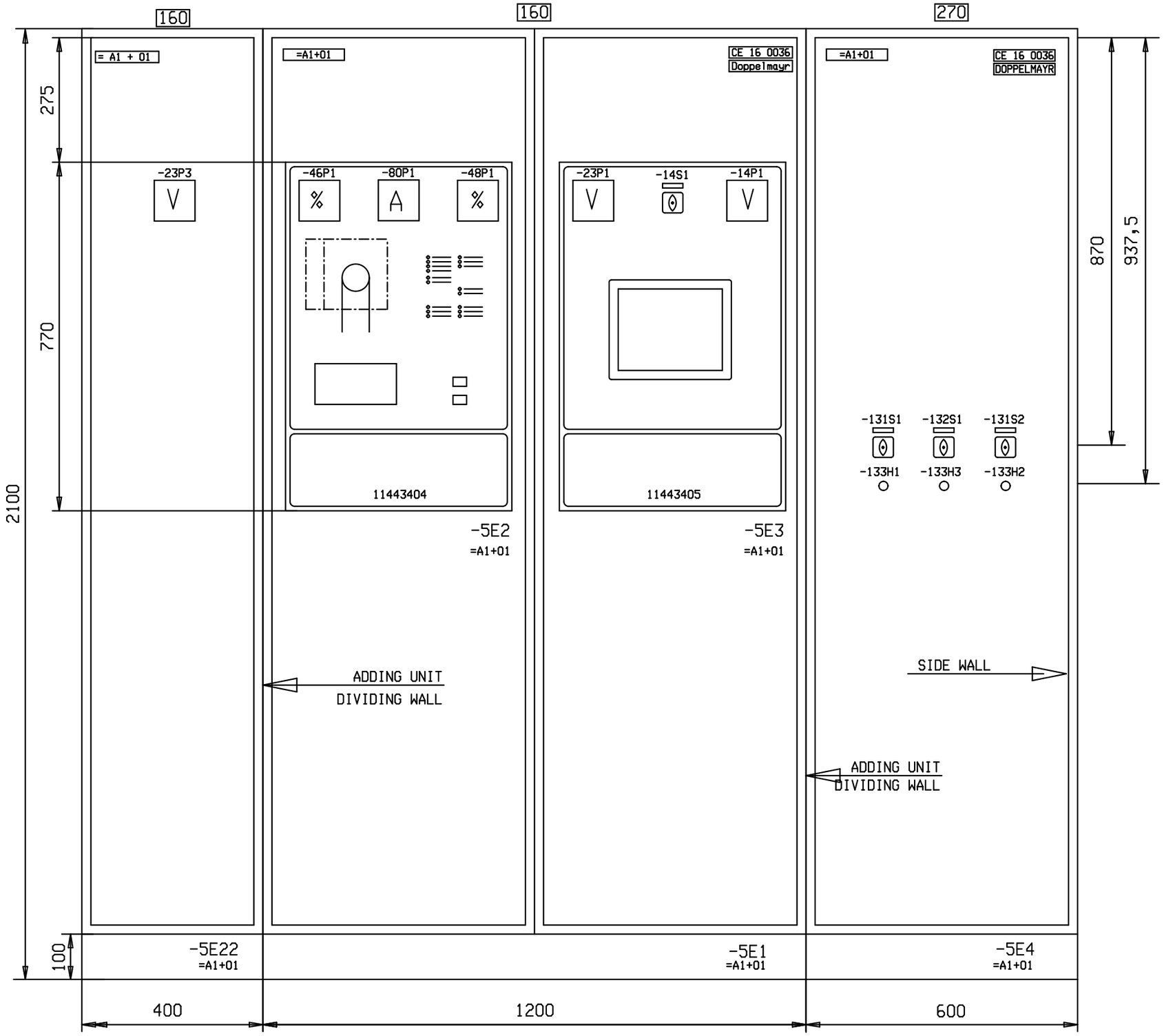

POSITION CONTROL PANELS

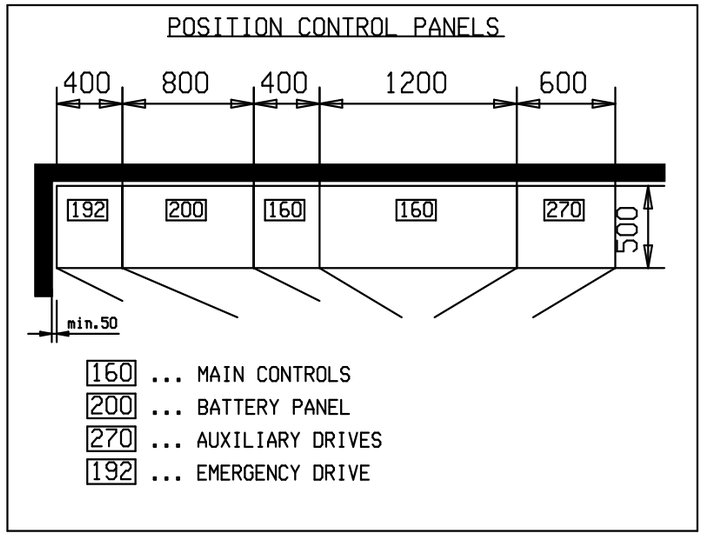

5E1: MAIN CONTROLS =A1+01

-14S1...CONTROL VOLTAGE
-14P1...CONTROL VOLTAGE
-23P1...BATTERY VOLTAGE
-23P3...BATTERY VOLTAGE SYSTEM 2
-46P1...TORQUE TANDEM 1
-80P1...LINE CURRENT ROPE POSITION
-48P1...TORQUE TANDEM 2

FREQUENCY CONVERTER STAND-BY MODE =A1+01 (-5E4):

-131S1 ... TORQUEENUNTERSTÜTZUNG INCOMING ON
-131S2 ... TORQUEENUNTERSTÜTZUNG OUTGOING ON
-132S1 ... REGULATING LINE CURVED SECTION ON
-133H1 ... TECHNICAL FAULT FREQUENCY CONVERTER INCOMING SIDE
-133H2 ... TECHNICAL FAULT FREQUENCY CONVERTER OUTGOING SIDE
-133H3 ... TECHNICAL FAULT FREQUENCY CONVERTER REGULATING LINE CURVED SECT

5E1: MAIN CONTROLS =A1+01

-5E5	=A1+01	1x LSC-FRAME
-5E6	=A1+01	1x CONTROL PANEL DOOR MACHINED (TS 8205.510 li.)
-5E7	=A1+01	1x CONTROL PANEL DOOR MACHINED (TS 8205.510 re.)
-5E8	=A1+01	1x DIVIDING WALL
-5E9	=A1+01	1x ADDING UNIT
-5E10	=A1+01	1x STICKER - "Doppelmayr-Logo"
-5E11	=A1+01	1x STICKER - "=A1+01"
-5E12	=A1+01	1x STICKER - ATTENTION - ELECTRICITY
-5E13	=A1+01	1x STICKER - MOBILE RADIOTELEPHONE FORBIDDEN
-5E14	=A1+01	1x STICKER - "CE 16 0036"

5E4: MAIN CONTROLS =A1+01

-5E15	=A1+01	1x LSC-FRAME
-5E16	=A1+01	1x STICKER - "Doppelmayr-Logo"
-5E17	=A1+01	1x STICKER - "=A1+01"
-5E18	=A1+01	1x STICKER - ATTENTION - ELECTRICITY
-5E19	=A1+01	1x STICKER - "CE 16 0036"
-5E20	=A1+01	1x WIRING MATERIAL A2+01-MGD
-5E21	=A1+01	1x SIDE WALL

5E22: MAIN CONTROLS =A1+01

-5E23	=A1+01	1x LSC-FRAME
-5E24	=A1+01	1x DIVIDING WALL
-5E25	=A1+01	1x ADDING UNIT
-5E26	=A1+01	1x STICKER - "=A1+01"
-5E27	=A1+01	1x CONTROL PANEL DOOR MACHINED (TS 8405.510 li.)

Revision	2.0	Drawn by	SST
Date	19.01.17	Dr.ch.by	FMa
File:	ANWAA4185		

10-MGD BaNa4
WAA0004185
DANANG / VIETNAM

Doppelmayr ®
Innova Patent GmbH
A-6960 WOLFURT / AUSTRIA

CONTROL PANEL DIMENSIONS

DRIVE STATION | LV-CONTROL

=A1+01

Date	10.05.17
Sheet :	5
Cont.sheet:	7

-7E1
=A1+044

11443303

-7E2
=A1+044

R.M.C. 4 (INCOMING)
=A1+044

-7E31 =A1+044 1x WIRING MATERIAL 044 / 055

-7E3
=A1+045

11443304

-7E4
=A1+045

R.M.C. 5 (OUTGOING)
=A1+045

-7E32 =A1+045 1x WIRING MATERIAL 044 / 055

11443305

-7E5
=A1+050

-7E32
=A1+050

DESKTOP CONTROL PANEL
CONTROL ROOM 1
=A1+050

-7E6 =A1+050 1x WIRING MATERIAL 044 / 055

= A1 + 07

CE 16 0036
Doppelmayr

@DSC

-7A1
=A1+07

-7E11
=A1+07

LIGHTNING PROTECTION BOX (STATION)
=A1+07

-7E12 =A1+07 1x STICKER - CE
-7E13 =A1+07 1x STICKER - "=A1+07"
-7E14 =A1+07 1x STICKER - "Doppelmayr-Logo"
-7E15 =A1+07 1x MOUNTING PLATE MACHINED
-7E32 =A1+07 1x FLANGE PLATE

TERMINAL BOX FIBRE OPTIC (STATION)
=A1+070

= A1 + 070

CE 16 0036
Doppelmayr

ID=11438095

-7E20
=A1+070

-7E21 =A1+070 1x STICKER - CE
-7E22 =A1+070 1x STICKER - "=A1+070"
-7E23 =A1+070 1x STICKER - "Doppelmayr-Logo"

-7E16
=A1+05

TERMINAL BOX
BRAKE HYDRAULICS
=A1+05

-7E17
=A1+0502

TERMINAL BOX
BRAKE HYDRAULICS
=A1+0502

-7E24
=A1+031

TERMINAL BOX TB1
=A1+031

-7E25
=A1+032

TERMINAL BOX TB2
=A1+032

-7E28
=A1+0131

TERMINALBOX TB11
=A1+0131

-7E29
=A1+0132

TERMINALBOX TB12
=A1+0132

@DSC

STOP
SLOW

OPTIONAL
R.M.C. 1
=A1+041

-7E8
=A1+041

@DSC

STOP
EMERG. STOP

OPTIONAL
R.M.C. 2
=A1+042

-7E9
=A1+042

@DSC

STOP
EMERG. STOP
STOP EB
SLOW

OPTIONAL
R.M.C. 3
=A1+043

-7E10
=A1+043

-7E18
=A1+051

TELEPHONE
FREQUENCY CONVERTER
=A1+051

-7E19
=A1+052

OPTIONAL
TELEPHONE
MACHINE ROOM
=A1+052

-7E26
=A1+033

TERMINAL BOX TB3
STATION/ MACHINE ROOM
=A1+033
OPTIONAL

-7E27
=A1+0133

TERMINAL BOX TB13
STATION
=A1+0133

-7E30
=A1+0231

TERMINAL BOX
INCOMING
=A1+0231

-7E31
=A1+0232

TERMINAL BOX
OUTGOING
=A1+0232

Revision	2.0	Drawn by	SST
Date	19.01.17	Dr.ch.by	FMa
File:	ANWAA4185		

10-MGD BaNa4
WAA0004185
DANANG / VIETNAM

Doppelmayr ®
Innova Patent GmbH
A-6960 WOLFURT / AUSTRIA

CONTROL PANEL DIMENSIONS

DRIVE STATION | LV-CONTROL

=A1+01

Date	03.10.16
Sheet :	7
Cont.sheet:	8

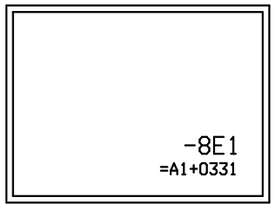

TERMINAL BOX DRIVE
TANDEM 1 (MOTOR 1+2)
MACHINE ROOM
=A1+0331

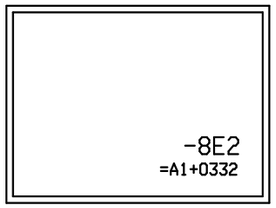

TERMINAL BOX DRIVE
TANDEM 2 (MOTOR 3+4)
MACHINE ROOM
=A1+0332

Revision	2.0	Drawn by	SST
Date	19.01.17	Dr.ch.by	FMa
File:	ANWAA4185		

10-MGD BaNa4
WAA0004185
DANANG / VIETNAM

Doppelmayr ®
Innova Patent GmbH
A-6960 WOLFURT / AUSTRIA

CONTROL PANEL DIMENSIONS

DRIVE STATION | LV-CONTROL

=A1+01

Date	01.06.16
Sheet :	8
Cont.sheet:	10

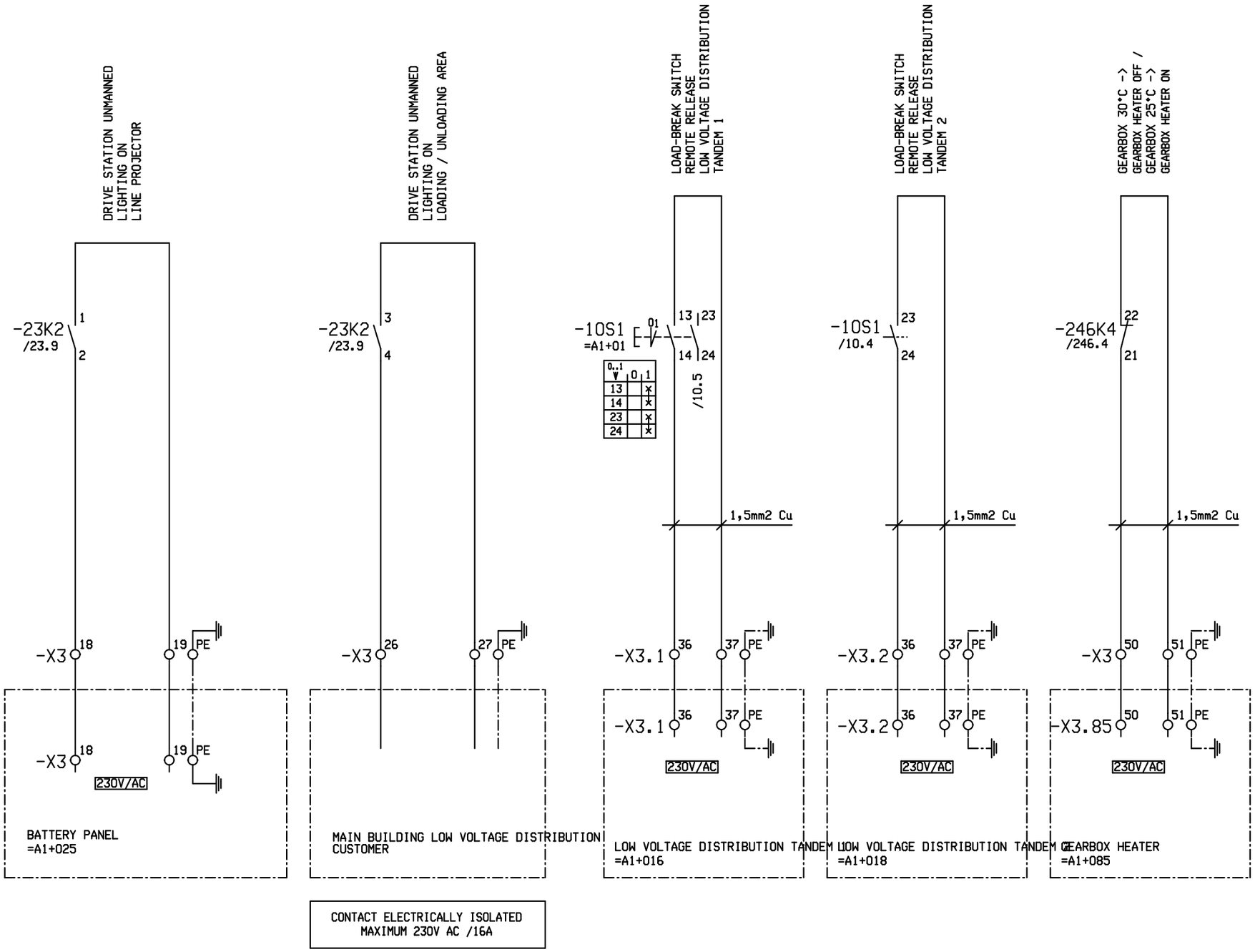

CONTACT ELECTRICALLY ISOLATED
MAXIMUM 230V AC /16A

Revision	2.0	Drawn by	SST
Date	19.01.17	Dr.ch.by	FMa
File:	ANWAA4185		

10-MGD BaNa4
WAA0004185
DANANG / VIETNAM

Doppelmayr ®
Innova Patent GmbH
A-6960 WOLFURT / AUSTRIA

CONTROL BOX LIGHT

DRIVE STATION | LV-CONTROL

=A1+01

Date	23.01.17
Sheet :	10
Cont.sheet:	11

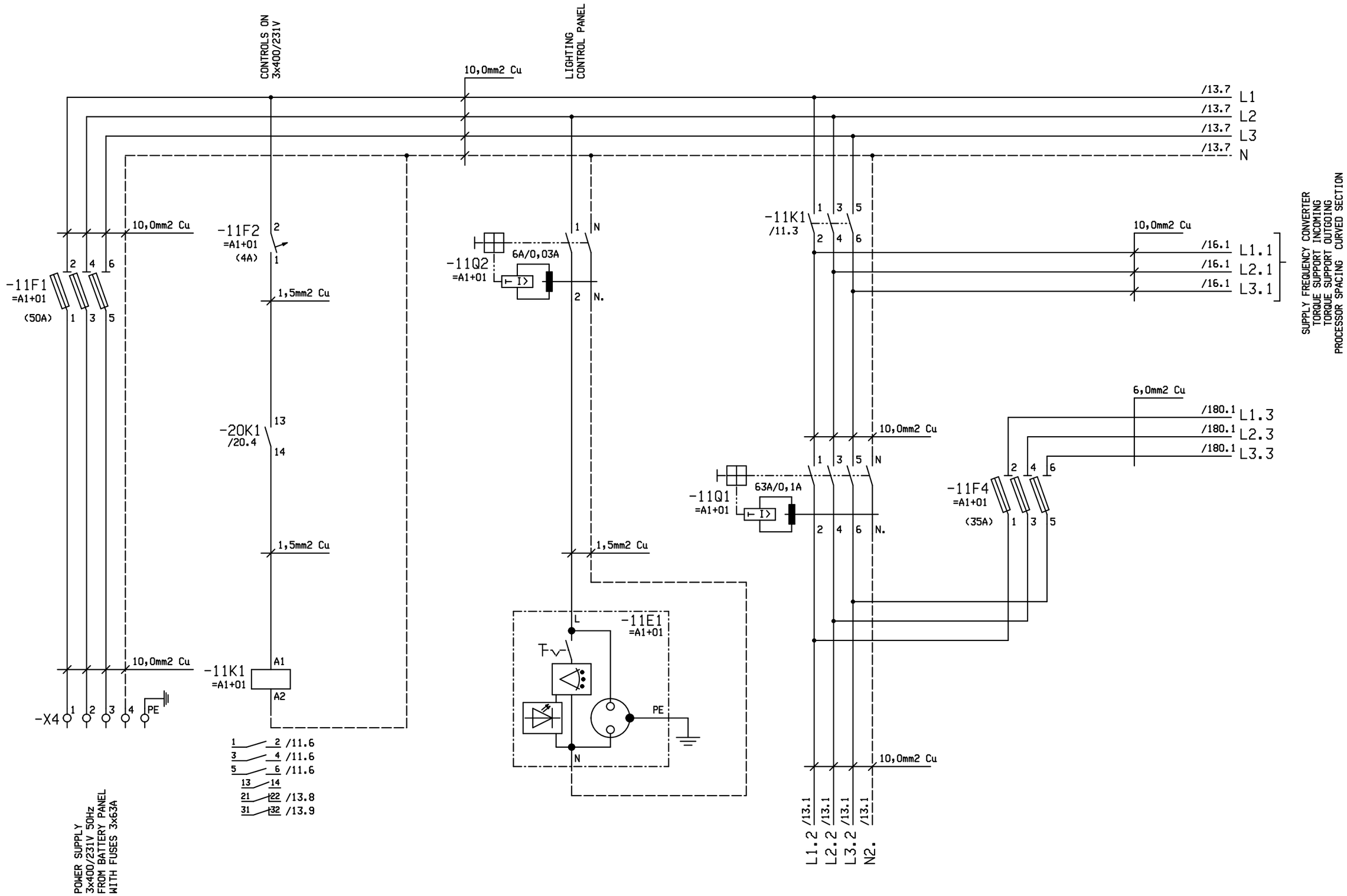

Revision	2.0	Drawn by	SST
Date	19.01.17	Dr.ch.by	FMa
File:	ANWAA4185		

10-MGD BaNa4
WAA0004185
DANANG / VIETNAM

Doppelmayr ®
Innova Patent GmbH
A-6960 WOLFURT / AUSTRIA

POWER SUPPLY 3X400/230V

DRIVE STATION | LV-CONTROL

=A1+01

Date	18.10.16
Sheet :	11
Cont.sheet:	13

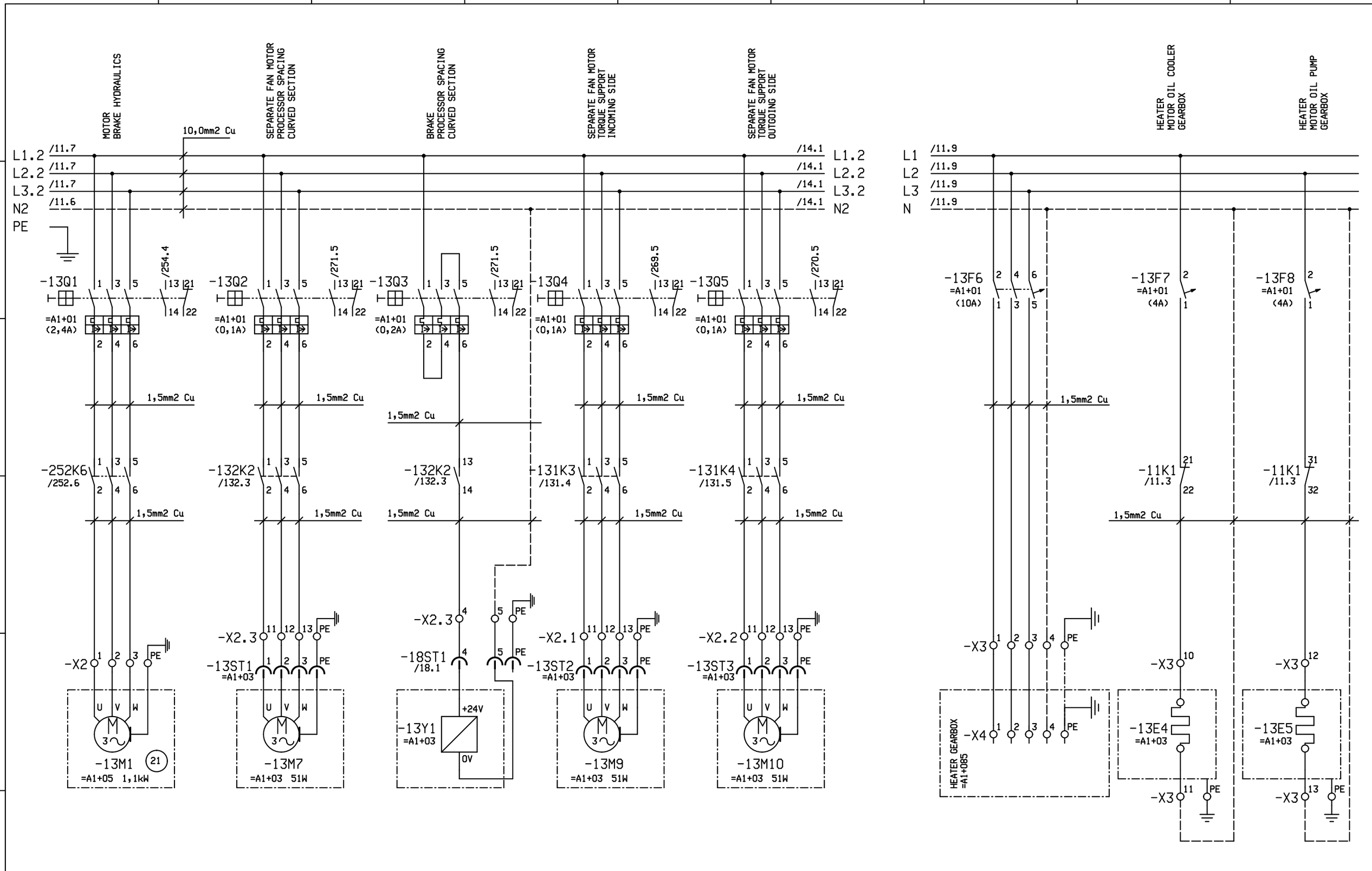

Revision	2.0	Drawn by	SST
Date	19.01.17	Dr.ch.by	FMa

File: ANWAA4185

10-MGD BaNa4
WAA0004185
DANANG / VIETNAM

Doppelmayr ®
Innova Patent GmbH
A-6960 WOLFURT / AUSTRIA

THREE-PHASE MOTORS

DRIVE STATION | LV-CONTROL

=A1+01

Date	10.05.17
Sheet :	13
Cont.sheet:	14

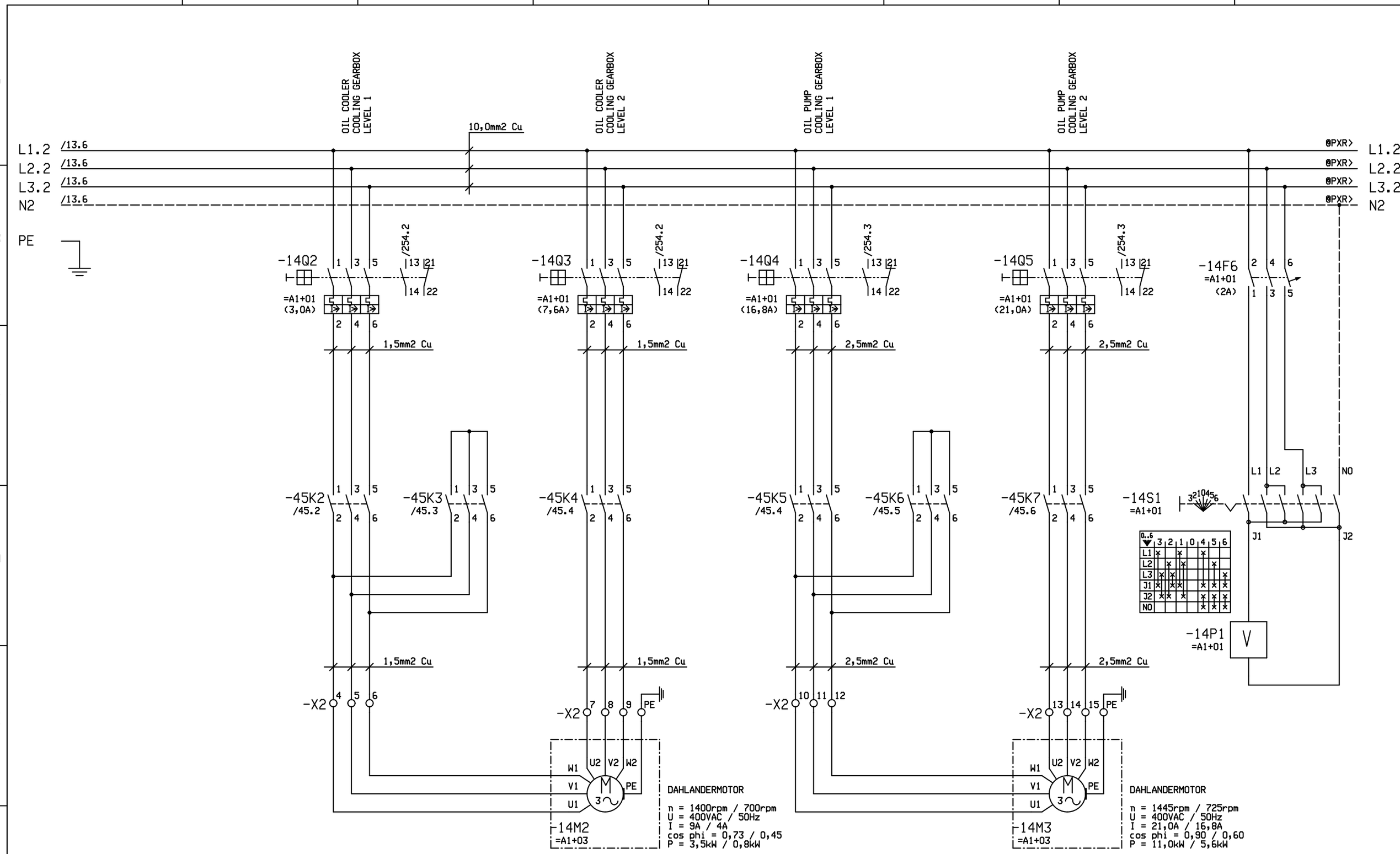

Revision	2.0	Drawn by	SST
Date	19.01.17	Dr.ch.by	FMa
File:	ANWAA4185		

10-MGD BaNa4
WAA0004185
DANANG / VIETNAM

Doppelmayr ®
Innova Patent GmbH
A-6960 WOLFURT / AUSTRIA

OIL COOLER / THREE-PHASE MOTORS

DRIVE STATION | LV-CONTROL

=A1+01

Date	22.03.17
Sheet :	14
Cont.sheet:	16

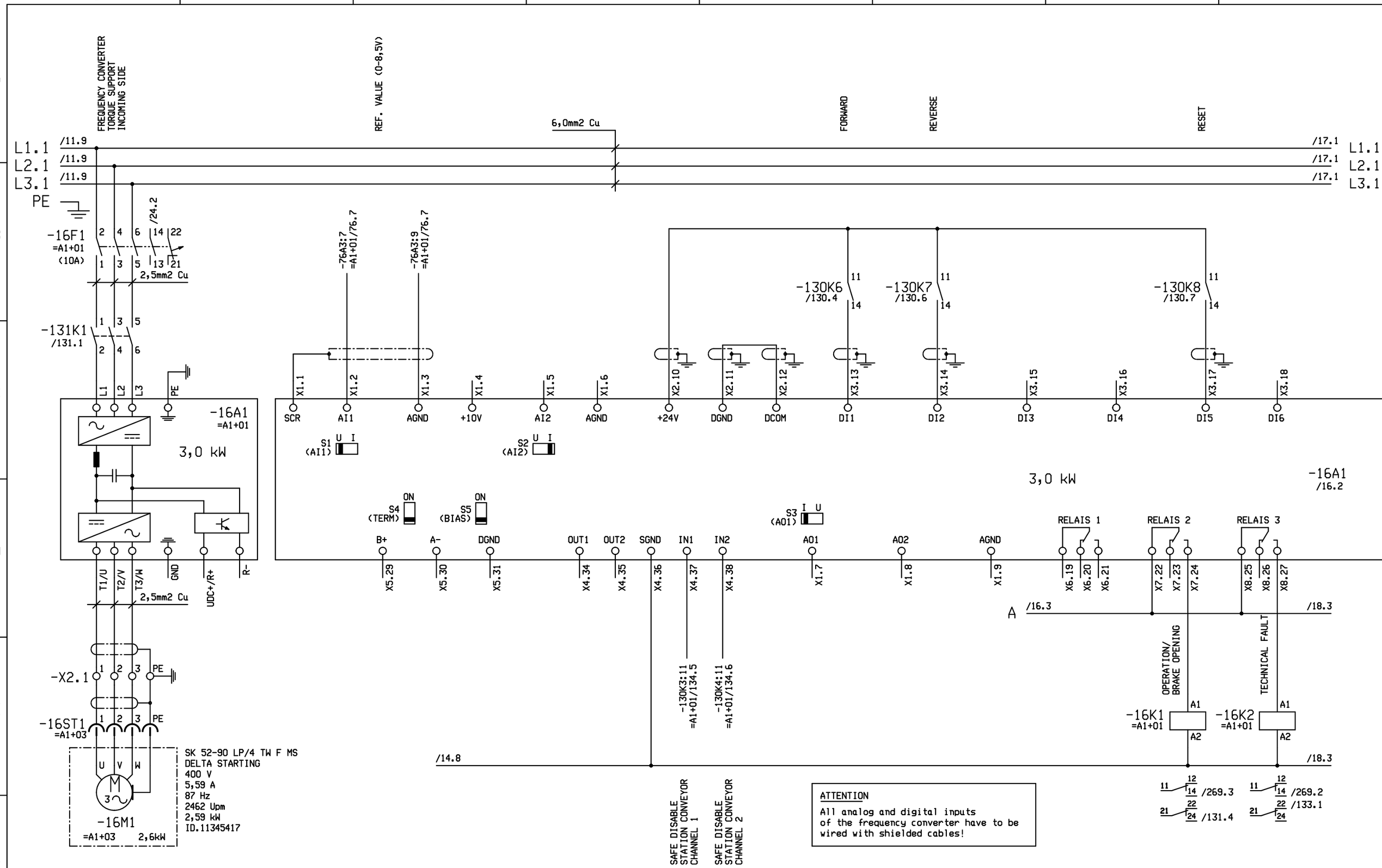

Revision	2.0	Drawn by	SST
Date	19.01.17	Dr.ch.by	FMa
File:	ANWAA4185		

10-MGD BaNa4
WAA0004185
DANANG / VIETNAM

Doppelmayr ®
Innova Patent GmbH
A-6960 WOLFURT / AUSTRIA

FREQUENCY CONVERTER STATION CONVEYOR INCOMING

DRIVE STATION | LV-CONTROL

=A1+01

Date	21.03.17
Sheet :	16
Cont.sheet:	17

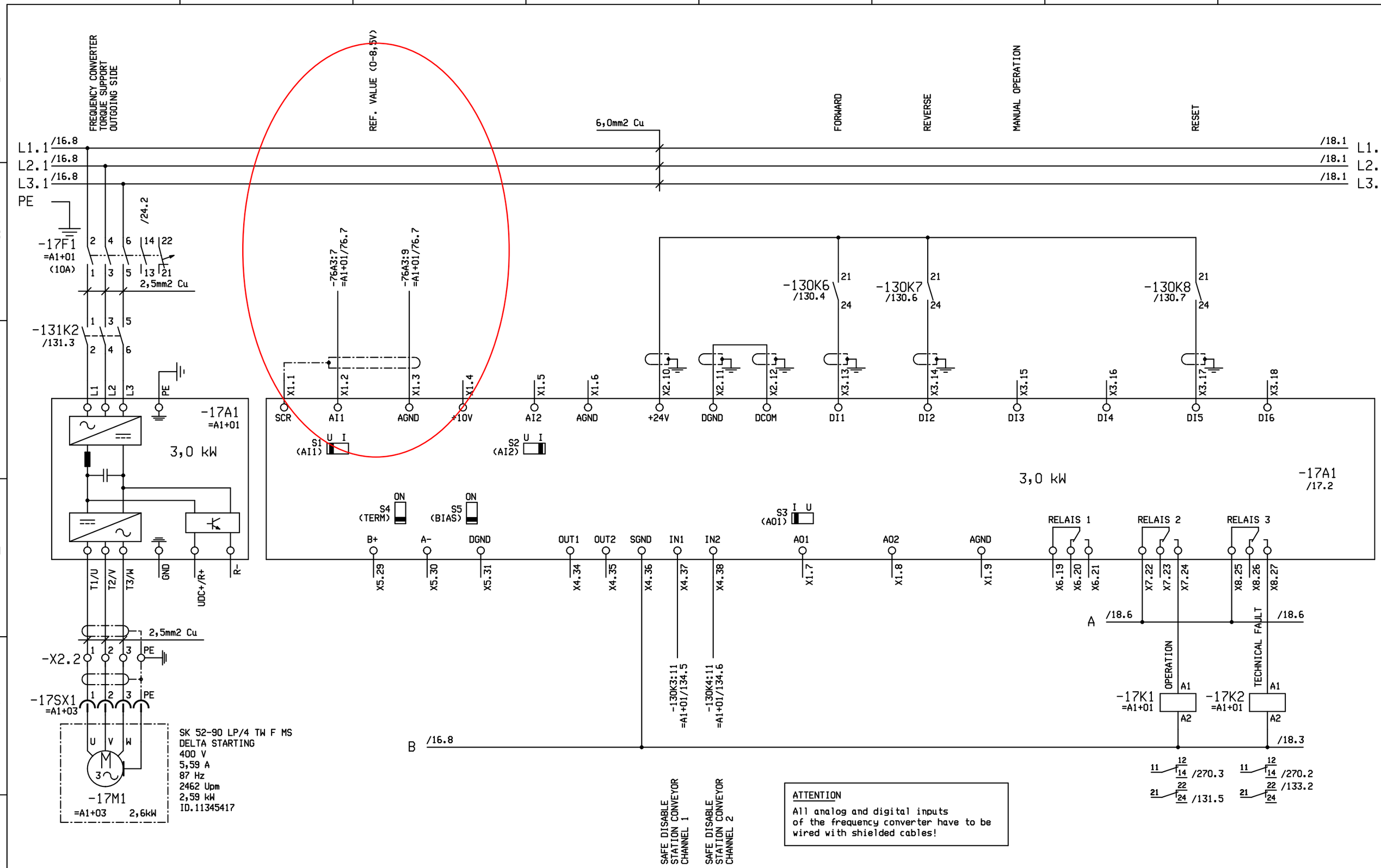

Revision	2.0	Drawn by	SST
Date	19.01.17	Dr.ch.by	FMa
File:	ANWAA4185		

10-MGD BaNa4
WAA0004185
DANANG / VIETNAM

Doppelmayr ®
Innova Patent GmbH
A-6960 WOLFURT / AUSTRIA

FREQUENCY CONVERTER STATION CONVEYOR OUTGOING

DRIVE STATION | LV-CONTROL

=A1+01

Date	21.03.17
Sheet :	17
Cont.sheet:	18

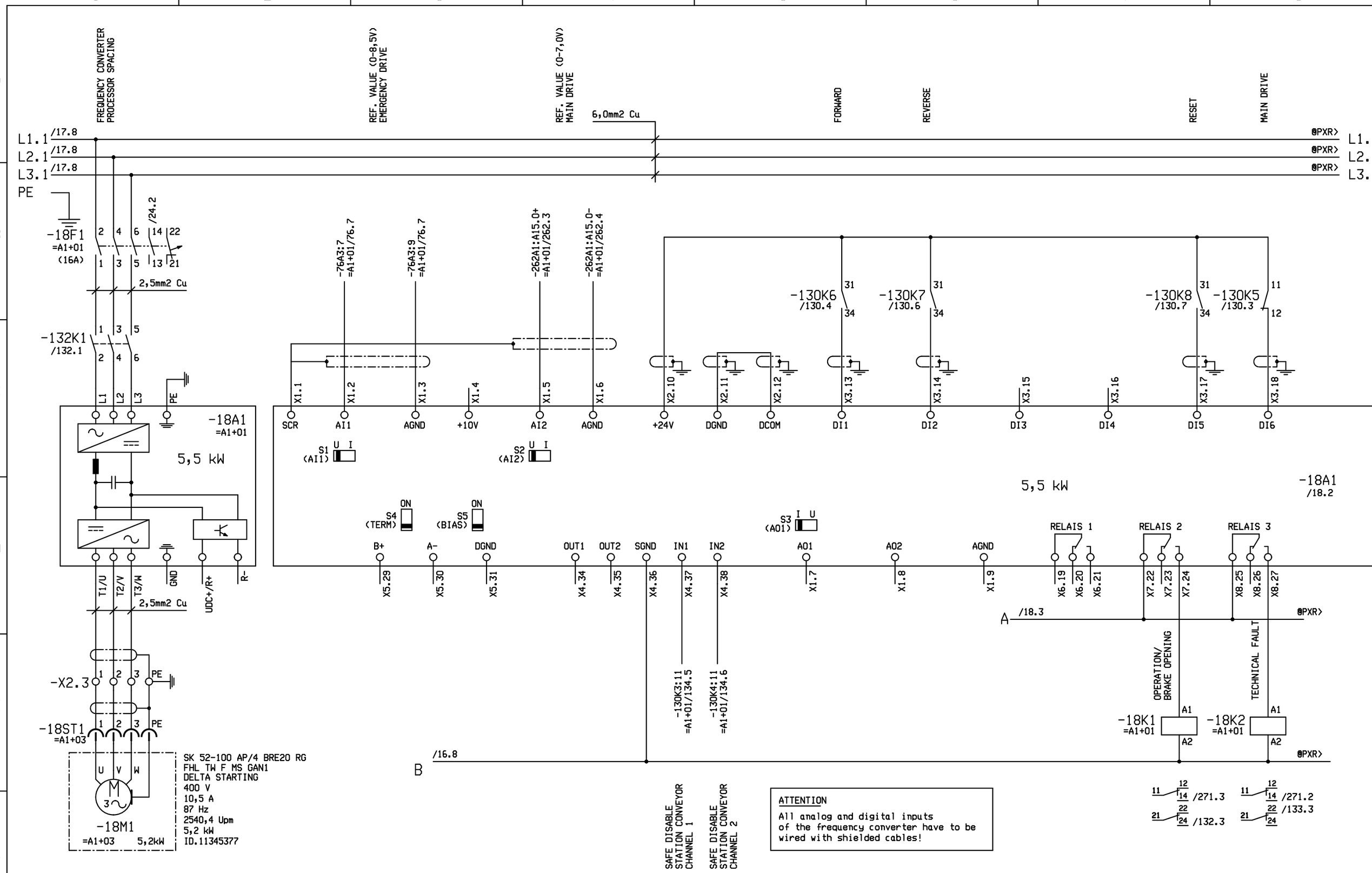

Revision	2.0	Drawn by	SST
Date	19.01.17	Dr.ch.by	FMa

File: ANWAA4185

10-MGD BaNa4
WAA0004185
DANANG / VIETNAM

Doppelmayr
Innova Patent GmbH
A-6960 WOLFURT / AUSTRIA

FREQUENCY CONVERTER PROCESSOR SPACING CURVED SECTION

DRIVE STATION | LV-CONTROL

=A1+01

Date	14.06.16
Sheet :	18
Cont.sheet:	20

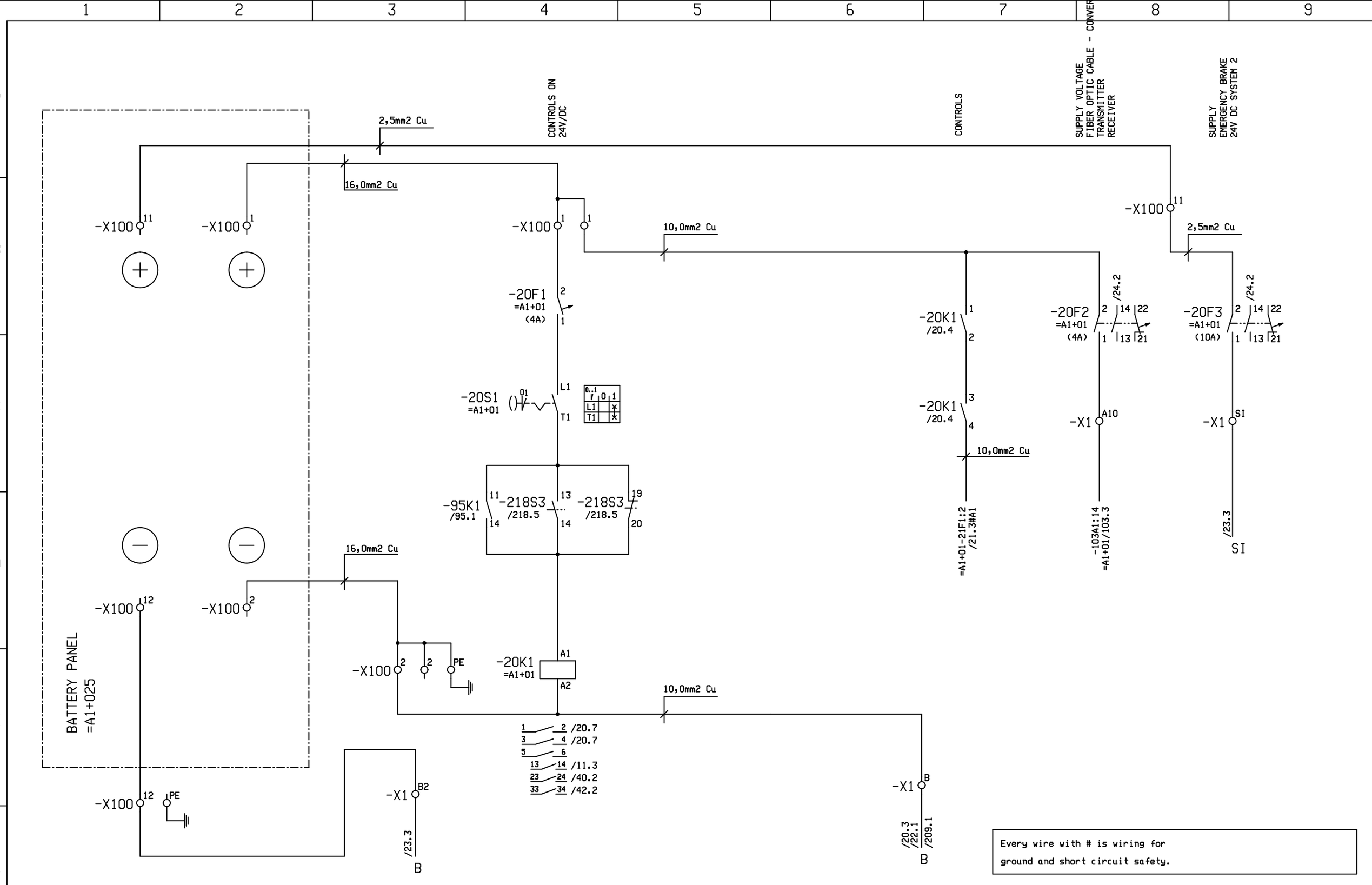

Every wire with # is wiring for ground and short circuit safety.

Revision	2.0	Drawn by	SST
Date	19.01.17	Dr.ch.by	FMa
File:	ANWAA4185		

10-MGD BaNa4
WAA0004185
DANANG / VIETNAM

Doppelmayr ®
Innova Patent GmbH
A-6960 WOLFURT / AUSTRIA

POWER SUPPLY 24V/DC

DRIVE STATION | LV-CONTROL

=A1+01

Date	19.01.17
Sheet :	20
Cont.sheet:	21

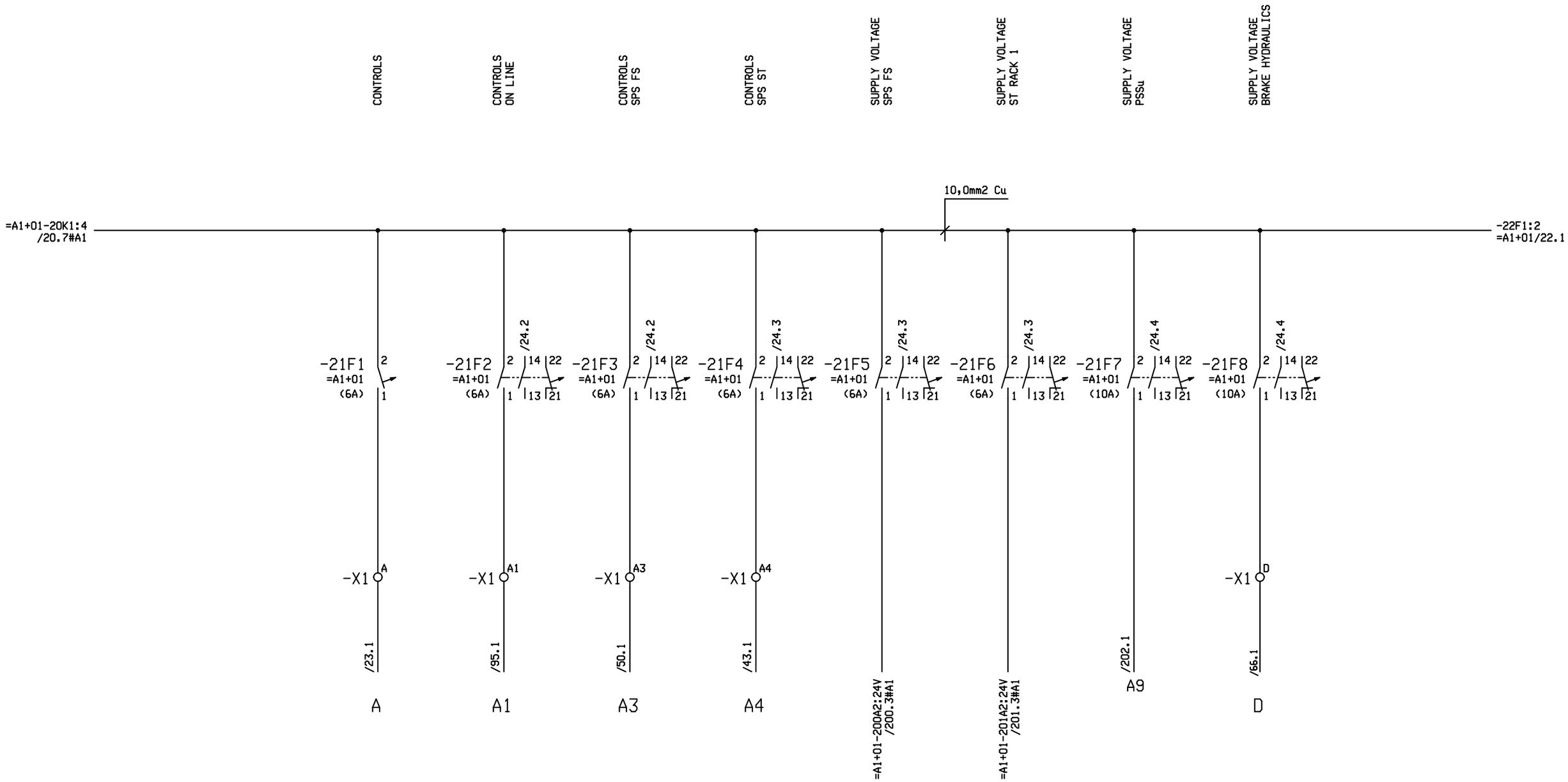

Revision	2.0	Drawn by	SST
Date	19.01.17	Dr.ch.by	FMa
File:	ANWAA4185		

10-MGD BaNa4
WAA0004185
DANANG / VIETNAM

Doppelmayr ®
Innova Patent GmbH
A-6960 WOLFURT / AUSTRIA

CIRCUIT BREAKERS

DRIVE STATION | LV-CONTROL

=A1+01

Date	26.07.16
Sheet :	21
Cont.sheet:	22

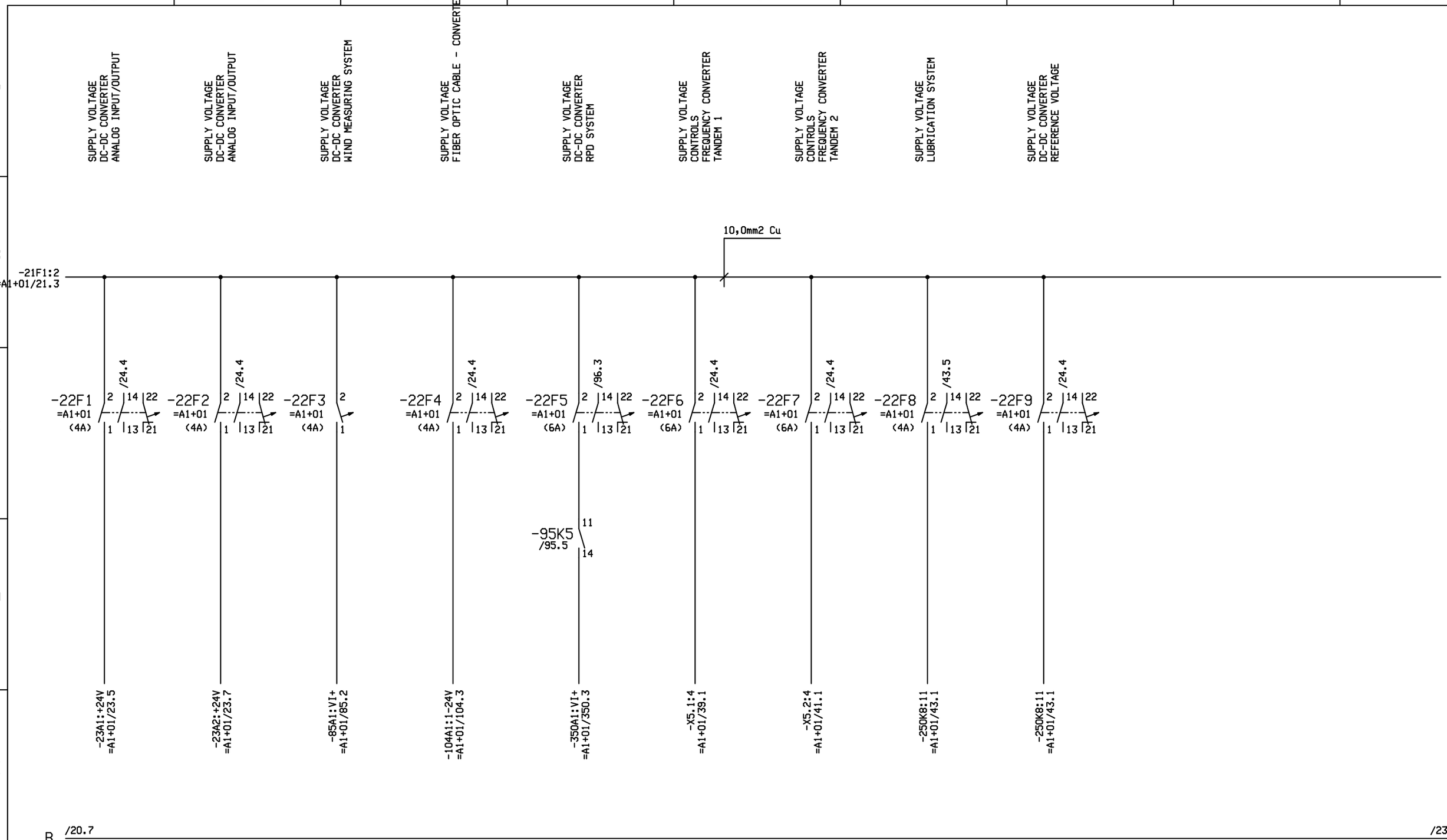

Revision	2.0	Drawn by	SST
Date	19.01.17	Dr.ch.by	FMa
File:	ANWAA4185		

10-MGD BaNa4
WAA0004185
DANANG / VIETNAM

Doppelmayr ®
Innova Patent GmbH
A-6960 WOLFURT / AUSTRIA

CIRCUIT BREAKERS

DRIVE STATION | LV-CONTROL

=A1+01

Date	20.01.17
Sheet :	22
Cont.sheet:	23

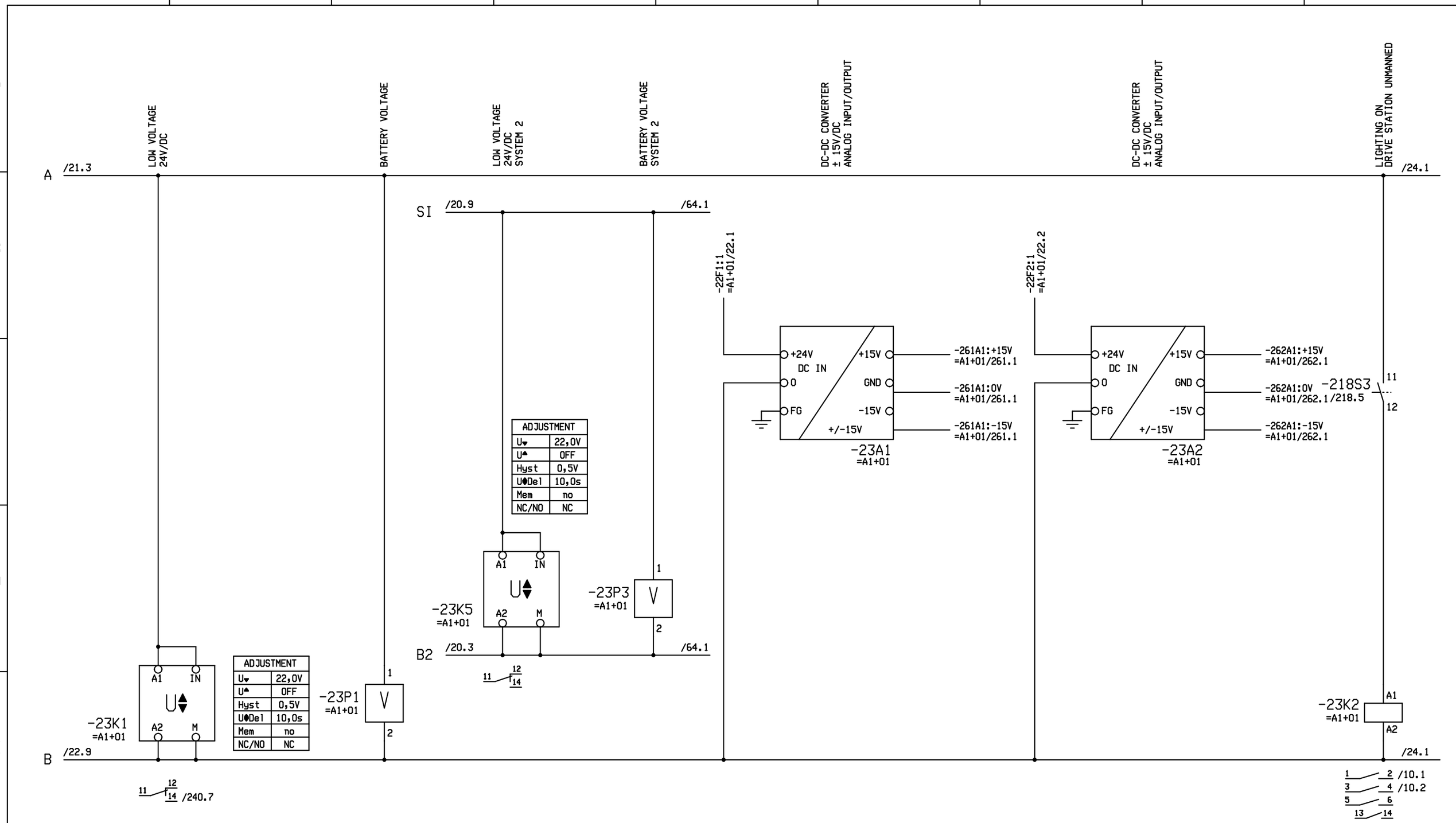

Revision	2.0	Drawn by	SST
Date	19.01.17	Dr.ch.by	FMa
File:	ANWAA4185		

10-MGD BaNa4
WAA0004185
DANANG / VIETNAM

Doppelmayr ®
Innova Patent GmbH
A-6960 WOLFURT / AUSTRIA

LOW VOLTAGE 24V/DC

DRIVE STATION | LV-CONTROL

=A1+01

Date	23.01.17
Sheet :	23
Cont.sheet:	24

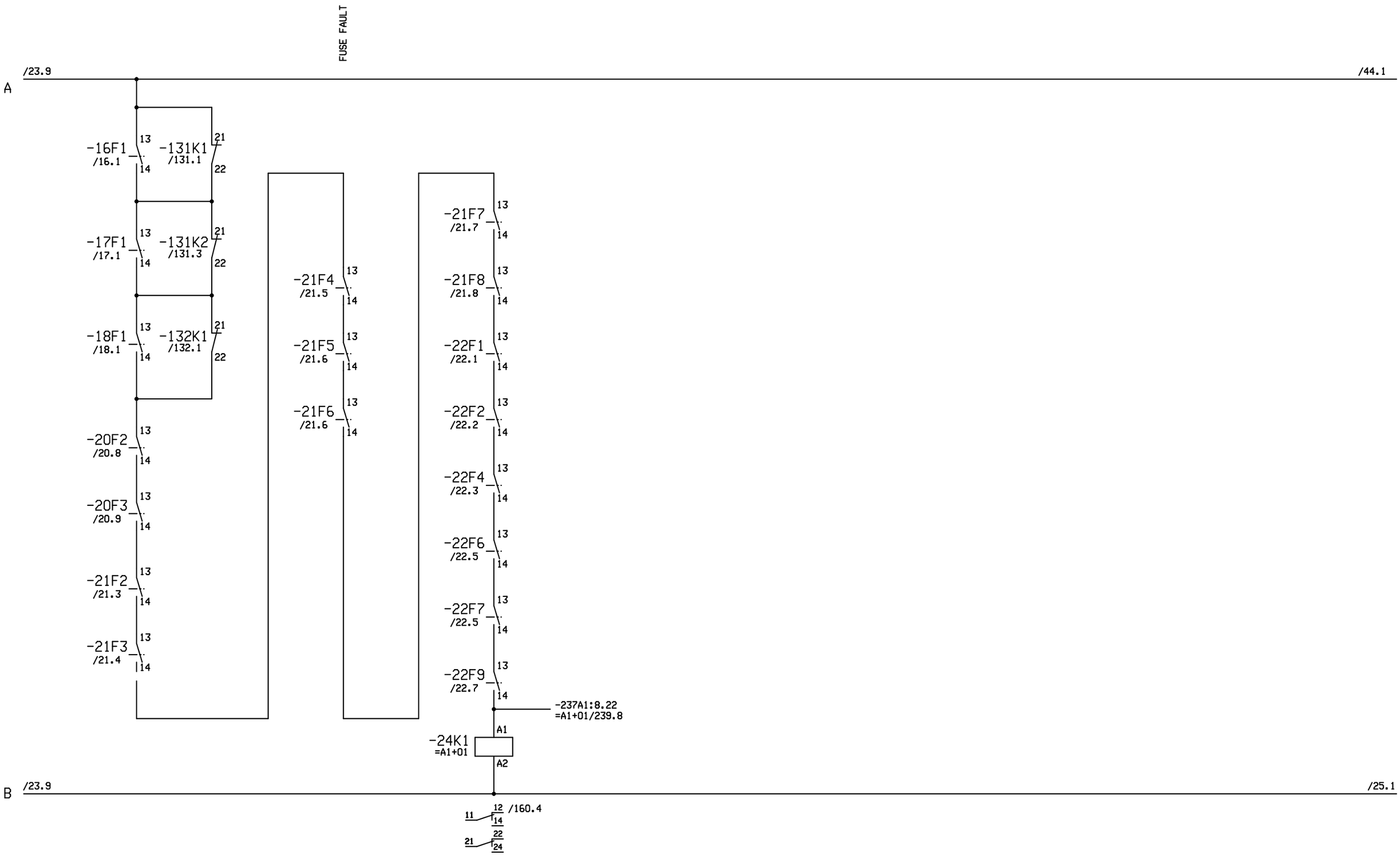

Revision	2.0	Drawn by	SST
Date	19.01.17	Dr.ch.by	FMa
File:	ANWAA4185		

10-MGD BaNa4
WAA0004185
DANANG / VIETNAM

Doppelmayr ®
Innova Patent GmbH
A-6960 WOLFURT / AUSTRIA

FUSE FAULT

DRIVE STATION | LV-CONTROL

=A1+01

Date	20.01.17
Sheet :	24
Cont.sheet:	25

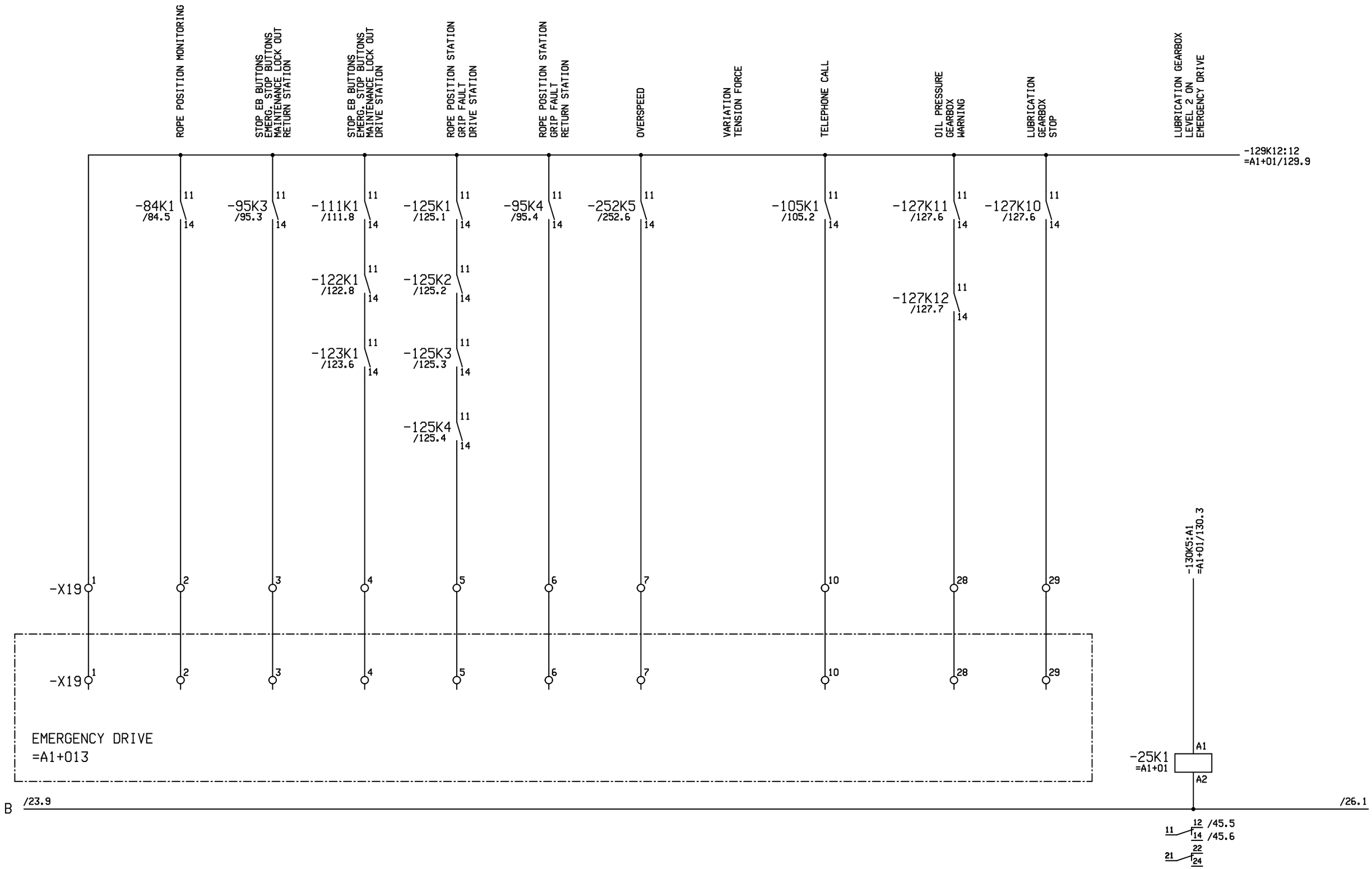

Revision	2.0	Drawn by	SST
Date	19.01.17	Dr.ch.by	FMa
File:	ANWAA4185		

10-MGD BaNa4
WAA0004185
DANANG / VIETNAM

Doppelmayr ®
Innova Patent GmbH
A-6960 WOLFURT / AUSTRIA

CONNECTIONS TO AUX. DRIVE

DRIVE STATION | LV-CONTROL

=A1+01

Date	22.03.17
Sheet :	25
Cont.sheet:	26

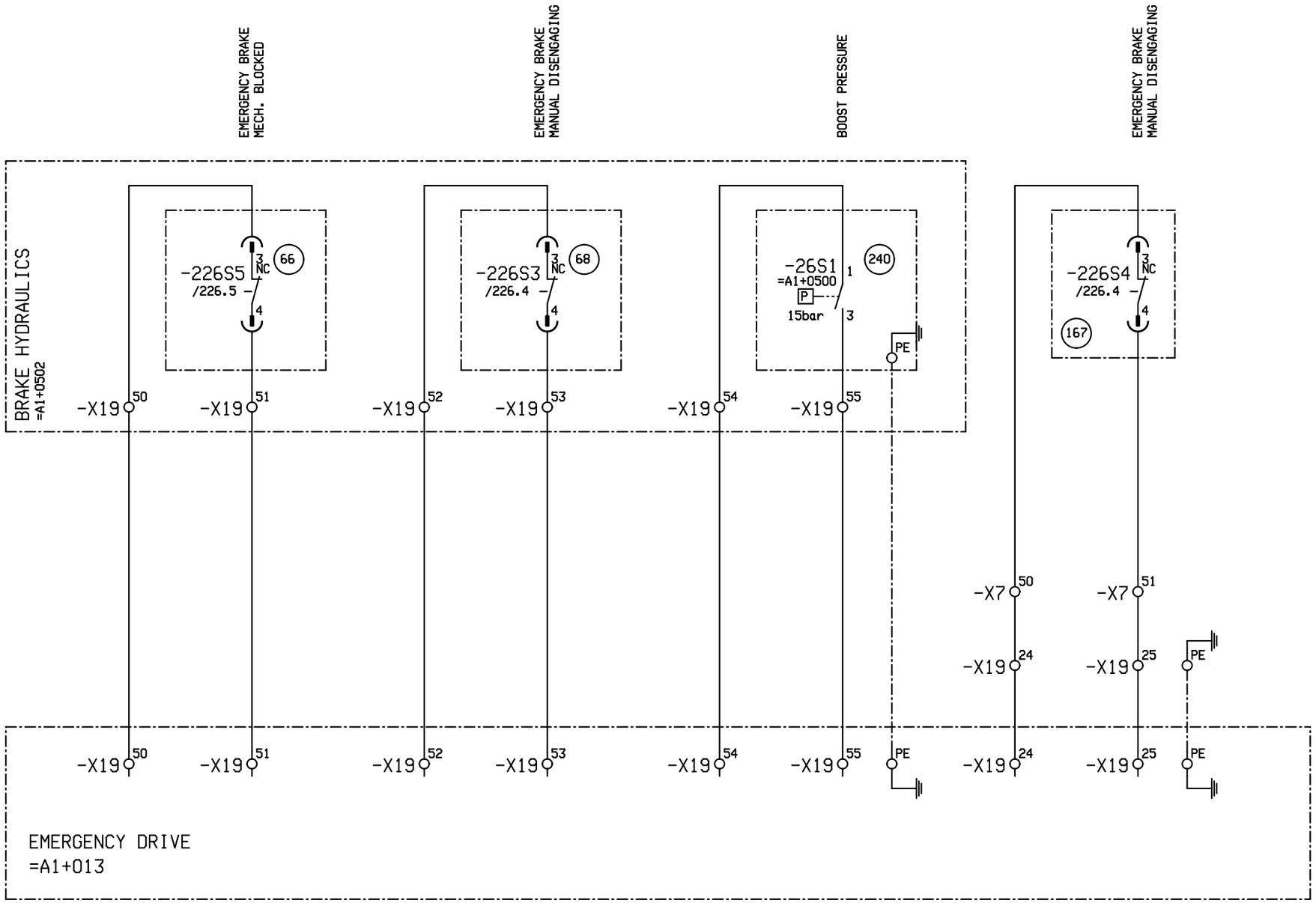

B /25.9 /27.1

Revision	2.0	Drawn by	SST
Date	19.01.17	Dr.ch.by	FMa
File:	ANWAA4185		

10-MGD BaNa4
WAA0004185
DANANG / VIETNAM

Doppelmayr ®
Innova Patent GmbH
A-6960 WOLFURT / AUSTRIA

CONNECTIONS TO AUX. DRIVE

DRIVE STATION | LV-CONTROL

=A1+01

Date	21.03.17
Sheet :	26
Cont.sheet:	27

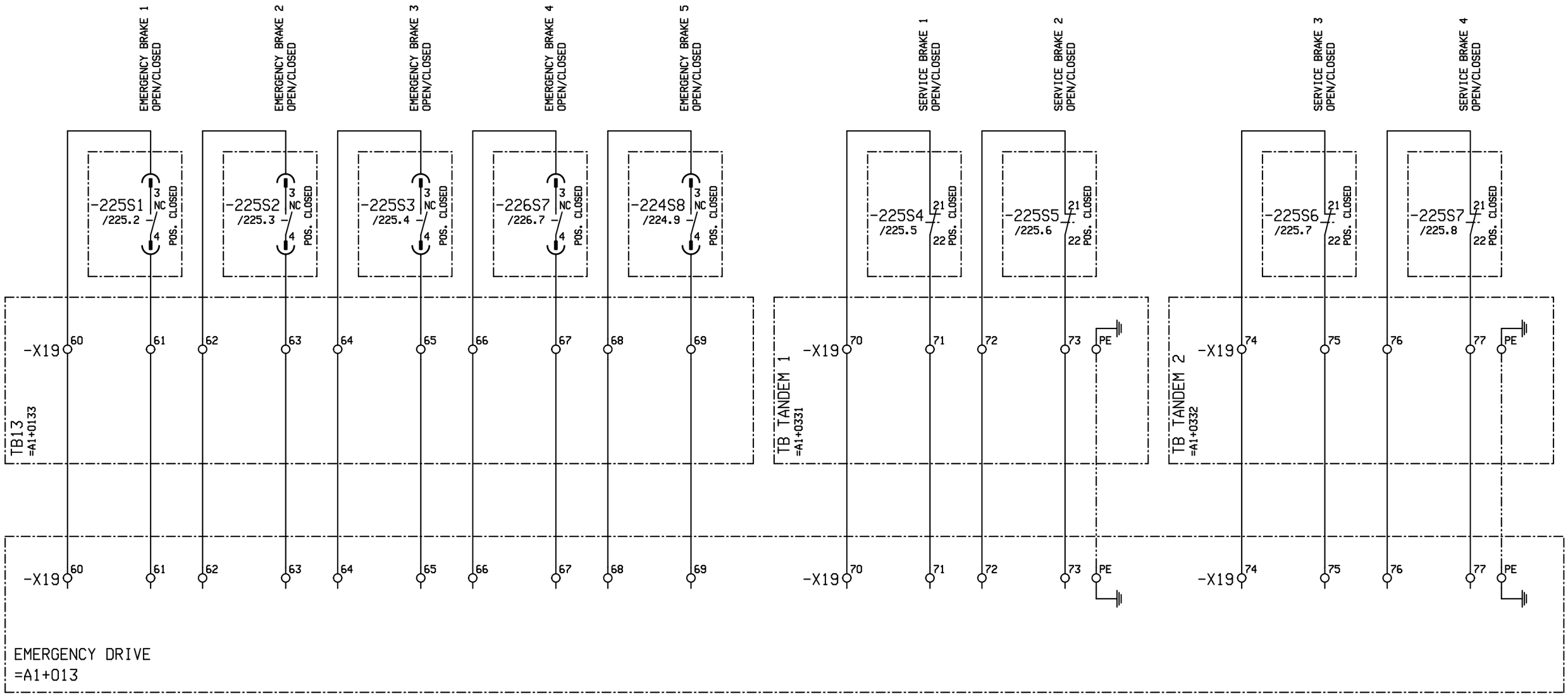

B /26.9 /28.1

Revision	2.0	Drawn by	SST
Date	19.01.17	Dr.ch.by	FMa
File:	ANWAA4185		

10-MGD BaNa4
WAA0004185
DANANG / VIETNAM

Doppelmayr ®
Innova Patent GmbH
A-6960 WOLFURT / AUSTRIA

CONNECTIONS TO AUX. DRIVE

DRIVE STATION | LV-CONTROL

=A1+01

Date	18.10.16
Sheet :	27
Cont.sheet:	28

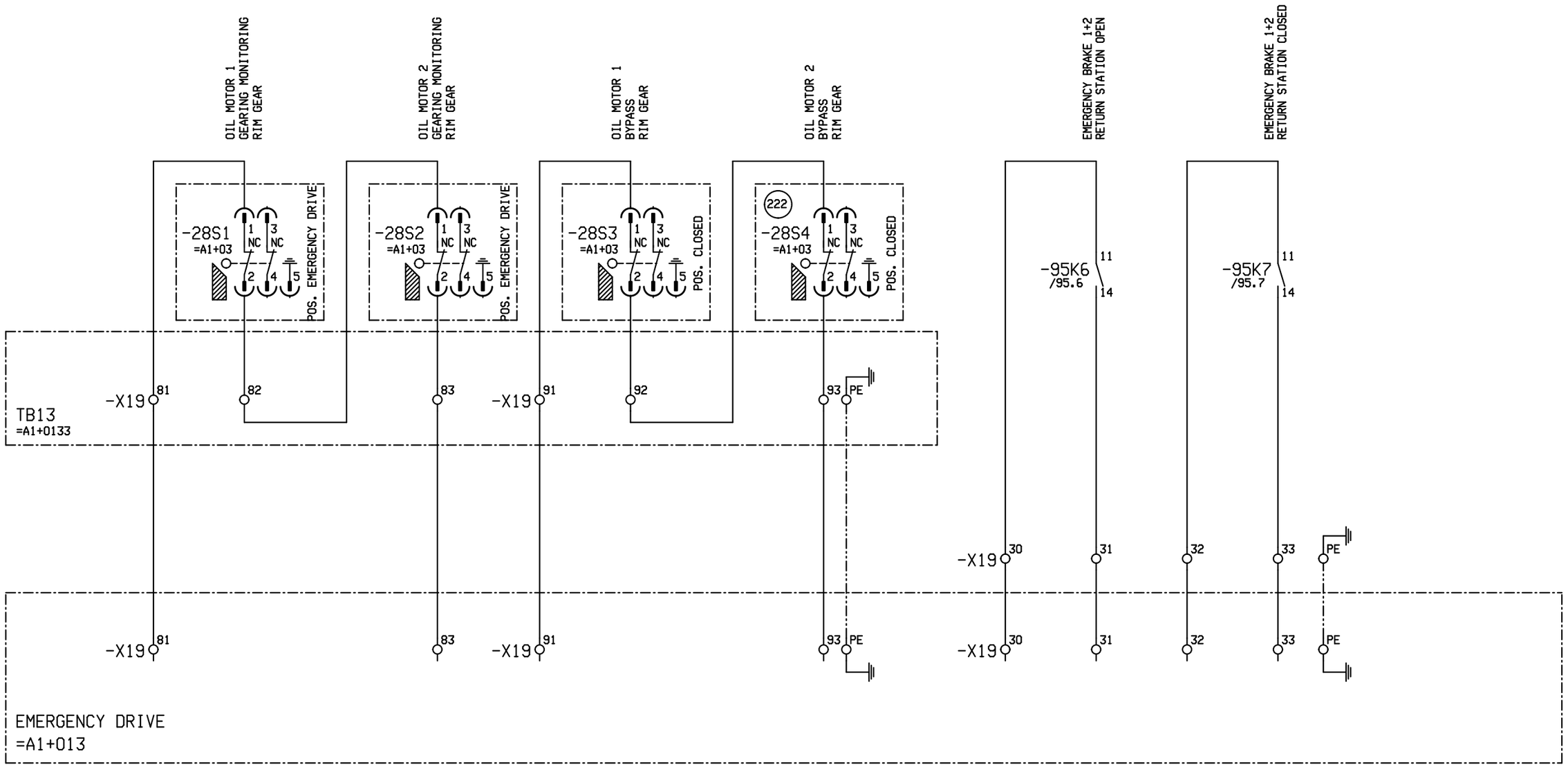

B /26.9 /39.1

Revision	2.0	Drawn by	SST
Date	19.01.17	Dr.ch.by	FMa
File:	ANWAA4185		

10-MGD BaNa4
WAA0004185
DANANG / VIETNAM

Doppelmayr ®
Innova Patent GmbH
A-6960 WOLFURT / AUSTRIA

CONNECTIONS TO AUX. DRIVE

DRIVE STATION | LV-CONTROL

=A1+01

Date	07.06.16
Sheet :	28
Cont.sheet:	39

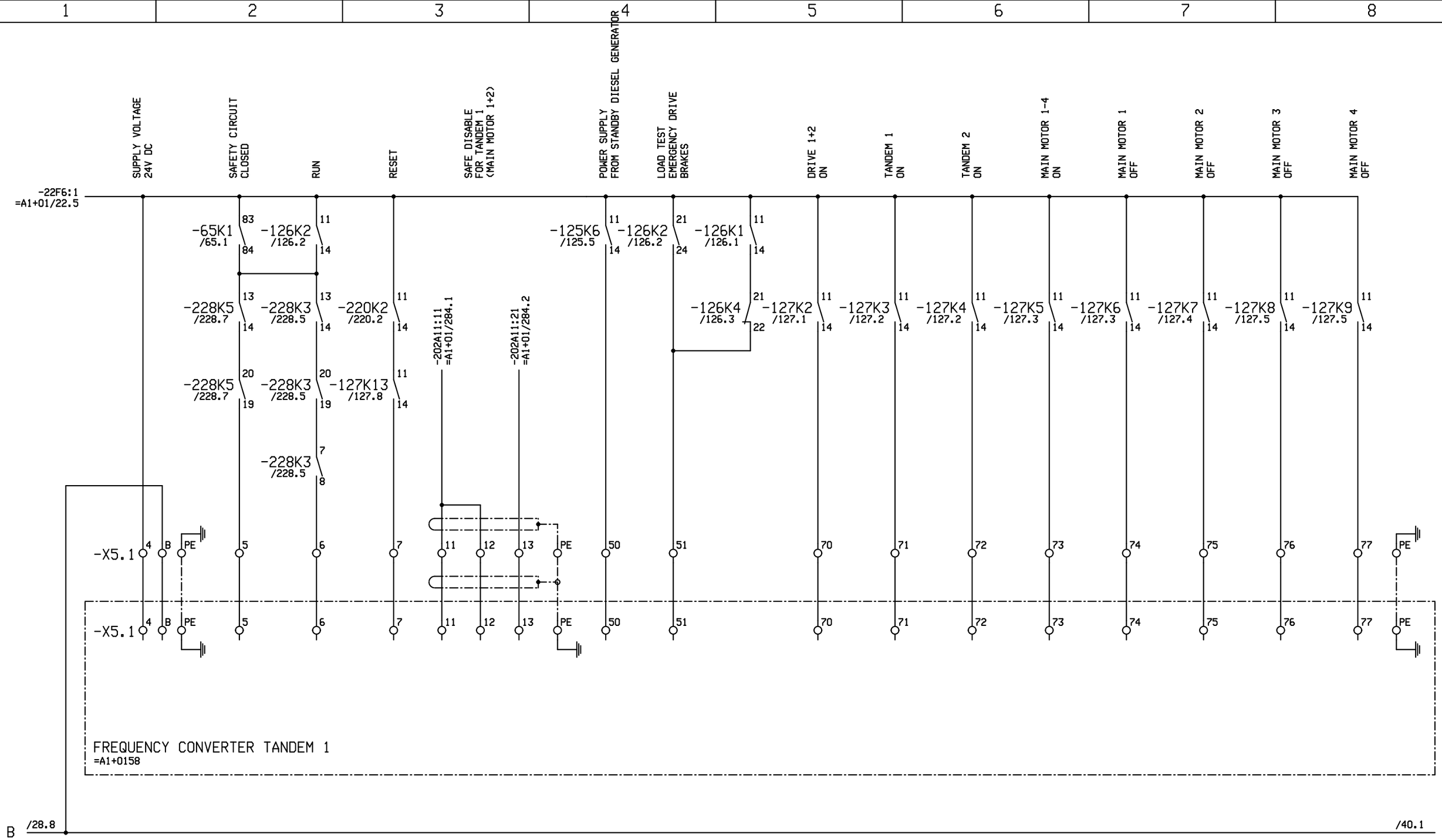

Revision	2.0	Drawn by	SST
Date	19.01.17	Dr.ch.by	FMa

File: ANWAA4185

10-MGD BaNa4
WAA0004185
DANANG / VIETNAM

Doppelmayr ®
Innova Patent GmbH
A-6960 WOLFURT / AUSTRIA

CONNECTIONS FREQUENCY CONVERTER TANDEM 1

DRIVE STATION | LV-CONTROL

=A1+01

Date	19.01.17
Sheet :	39
Cont.sheet:	40

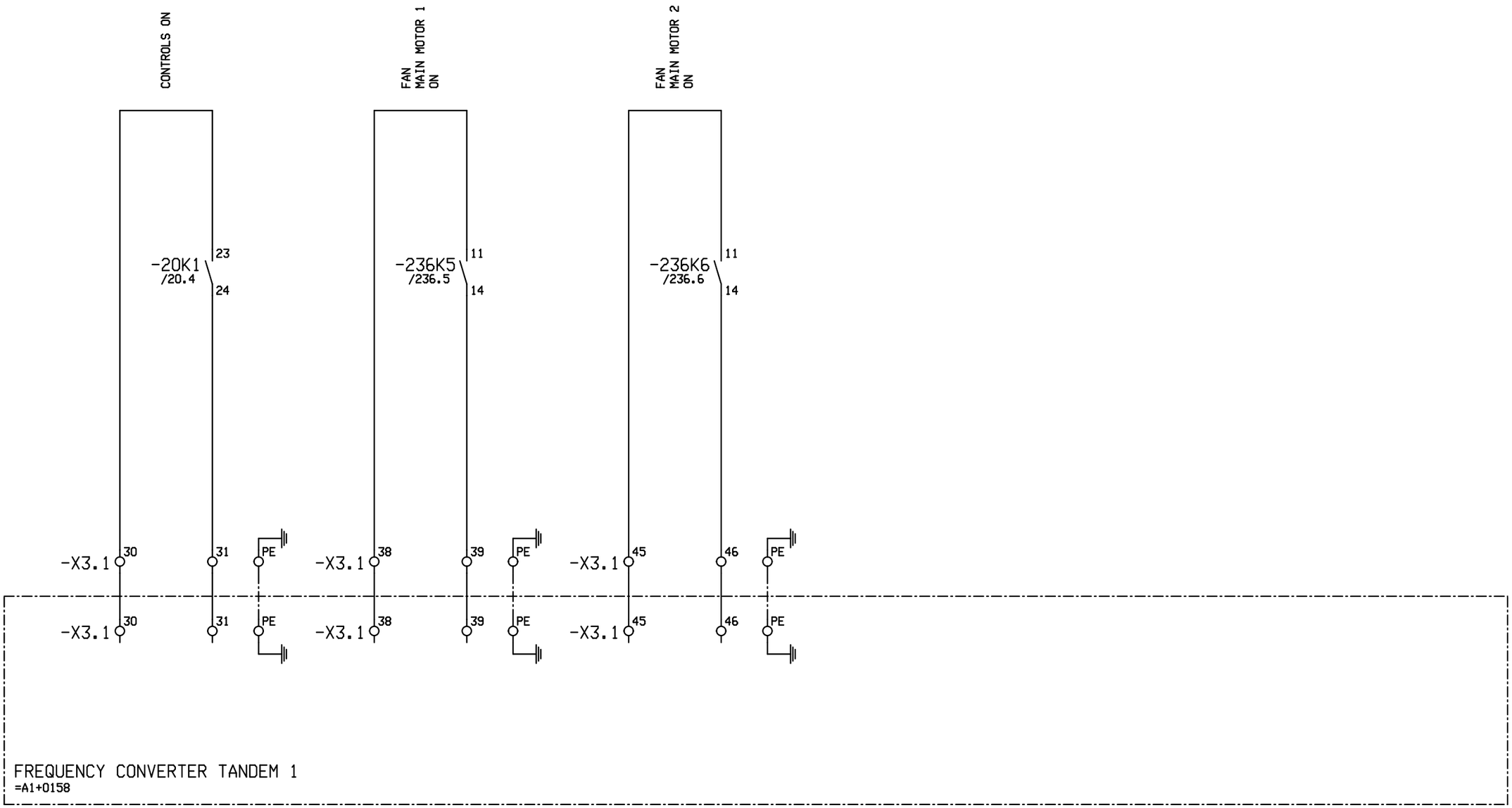

B /39.8 /41.1

Revision	2.0	Drawn by	SST
Date	19.01.17	Dr.ch.by	FMa
File:	ANWAA4185		

10-MGD BaNa4
WAA0004185
DANANG / VIETNAM

Doppelmayr ®
Innova Patent GmbH
A-6960 WOLFURT / AUSTRIA

CONNECTIONS FREQUENCY CONVERTER TANDEM 1

DRIVE STATION | LV-CONTROL

=A1+01

Date	19.01.17
Sheet :	40
Cont.sheet:	41

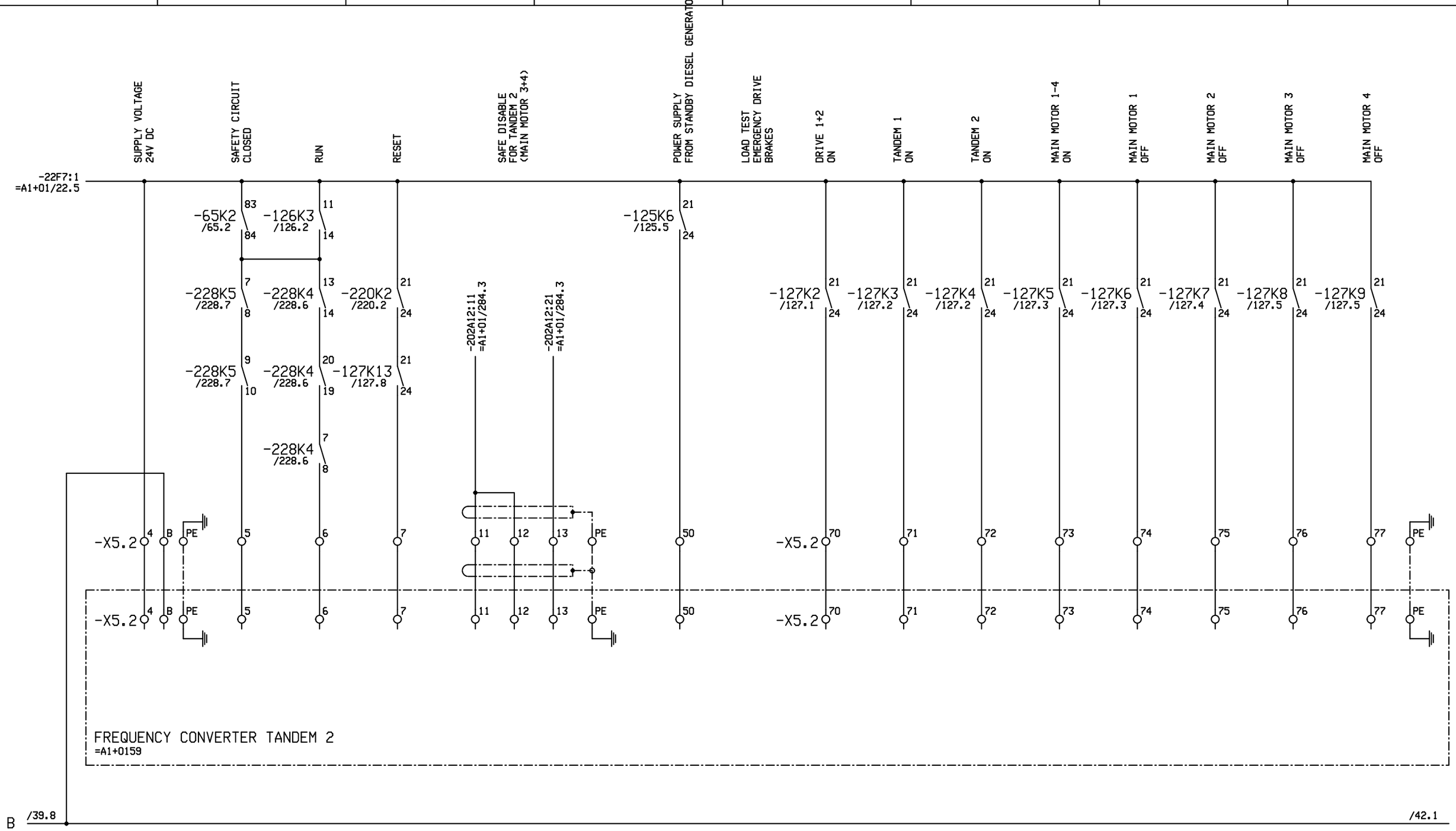

Revision	2.0	Drawn by	SST
Date	19.01.17	Dr.ch.by	FMa

File: ANWAA4185

10-MGD BaNa4
WAA0004185
DANANG / VIETNAM

Doppelmayr ®
Innova Patent GmbH
A-6960 WOLFURT / AUSTRIA

CONNECTIONS FREQUENCY CONVERTER TANDEM 2

DRIVE STATION | LV-CONTROL

=A1+01

Date	22.03.17
Sheet :	41
Cont.sheet:	42

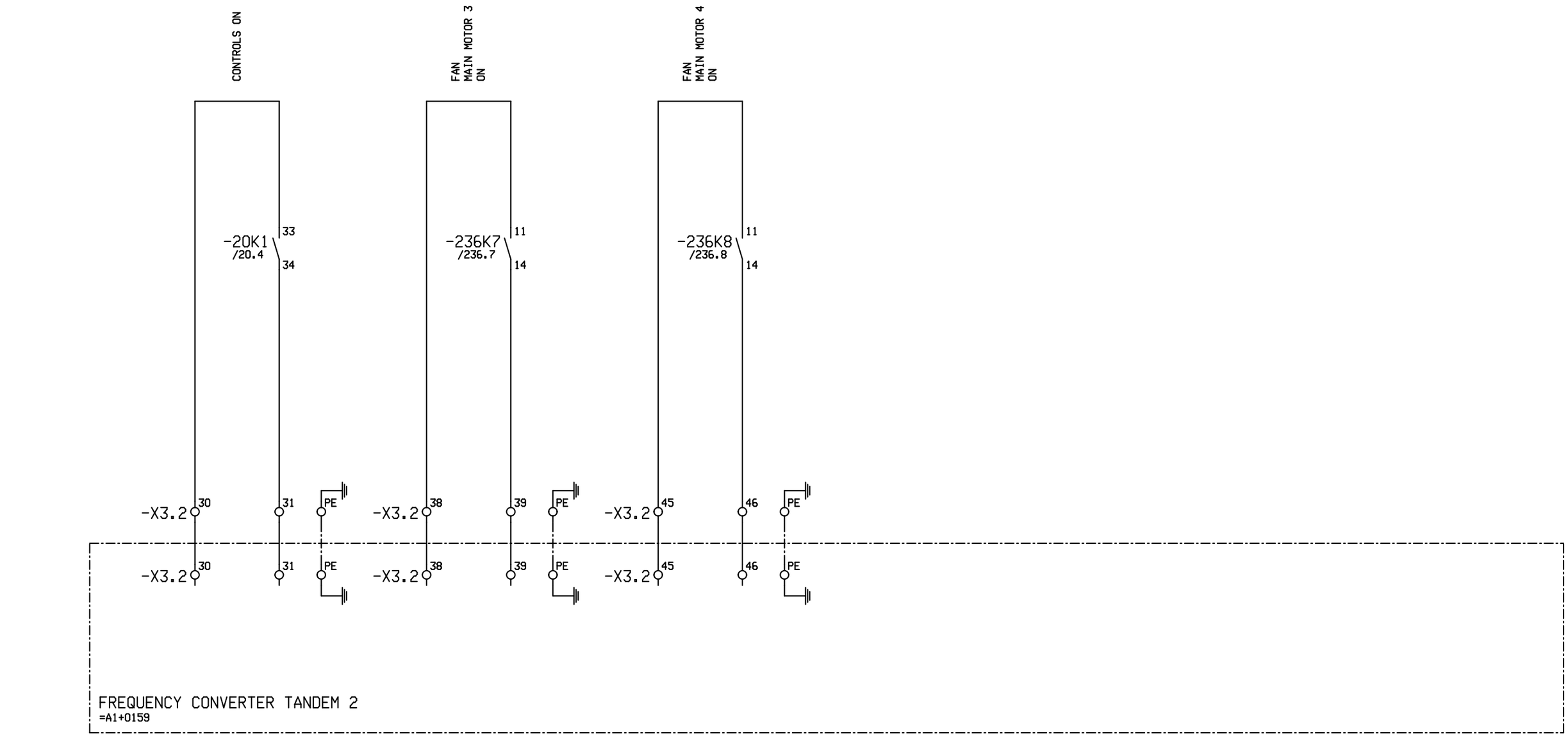

B /41.8 /43.1

Revision	2.0	Drawn by	SST
Date	19.01.17	Dr.ch.by	FMa
File:	ANWAA4185		

10-MGD BaNa4
WAA0004185
DANANG / VIETNAM

Doppelmayr ®
Innova Patent GmbH
A-6960 WOLFURT / AUSTRIA

CONNECTIONS FREQUENCY CONVERTER TANDEM 2

DRIVE STATION | LV-CONTROL

=A1+01

Date	21.03.17
Sheet :	42
Cont.sheet:	43

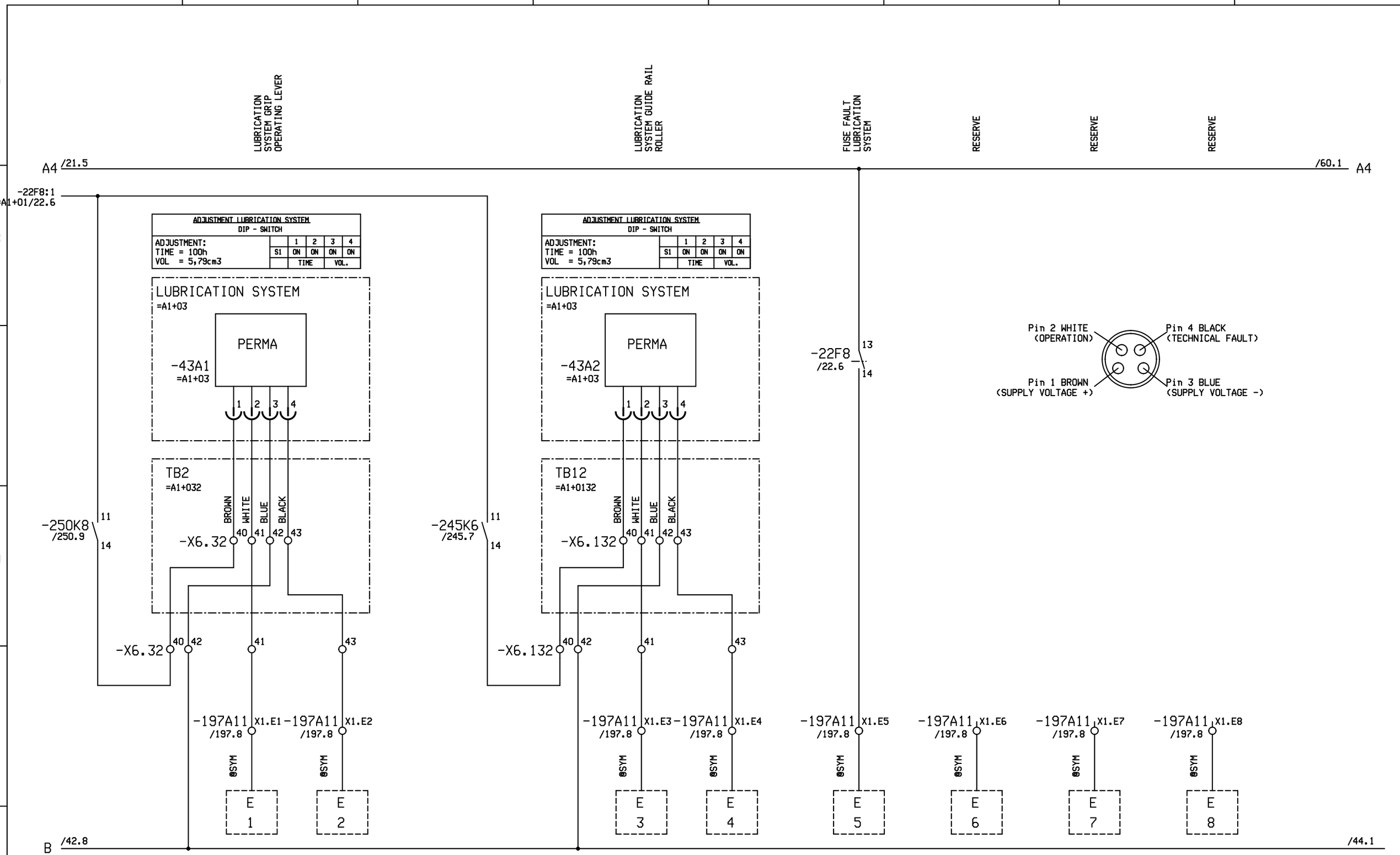

Revision	2.0	Drawn by	SST
Date	19.01.17	Dr.ch.by	FMa
File:	ANWAA4185		

10-MGD BaNa4
WAA0004185
DANANG / VIETNAM

Doppelmayr ®
Innova Patent GmbH
A-6960 WOLFURT / AUSTRIA

INPUT PLC BECKHOFF - LUBRICATION SYSTEM

DRIVE STATION | LV-CONTROL

=A1+01

Date	19.01.17
Sheet :	43
Cont.sheet:	44

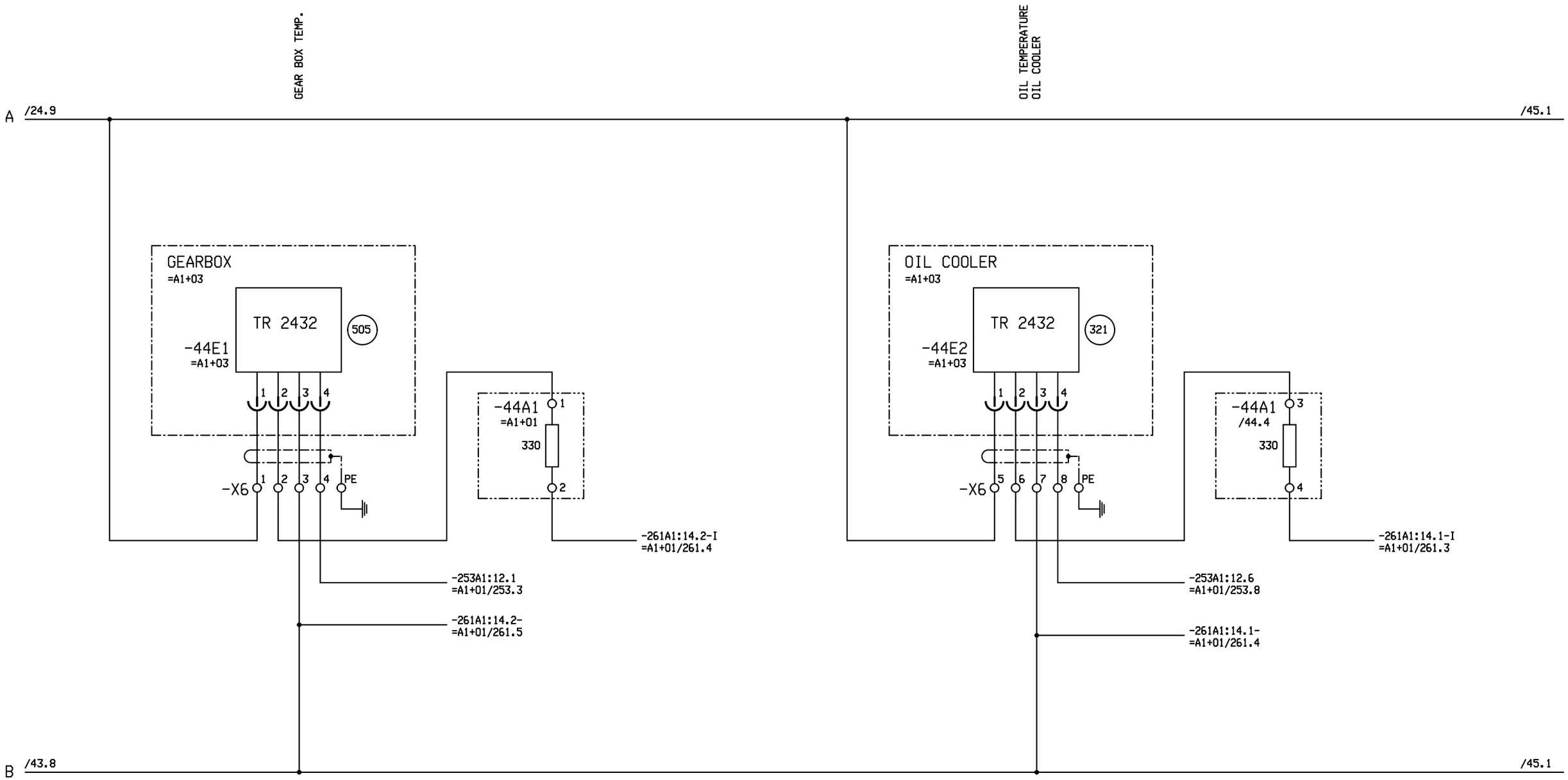

Revision	2.0	Drawn by	SST
Date	19.01.17	Dr.ch.by	FMa
File:	ANWAA4185		

10-MGD BaNa4
WAA0004185
DANANG / VIETNAM

Doppelmayr ®
Innova Patent GmbH
A-6960 WOLFURT / AUSTRIA

GEAR BOX TEMP.

DRIVE STATION | LV-CONTROL

=A1+01

Date	20.01.17
Sheet :	44
Cont.sheet:	45

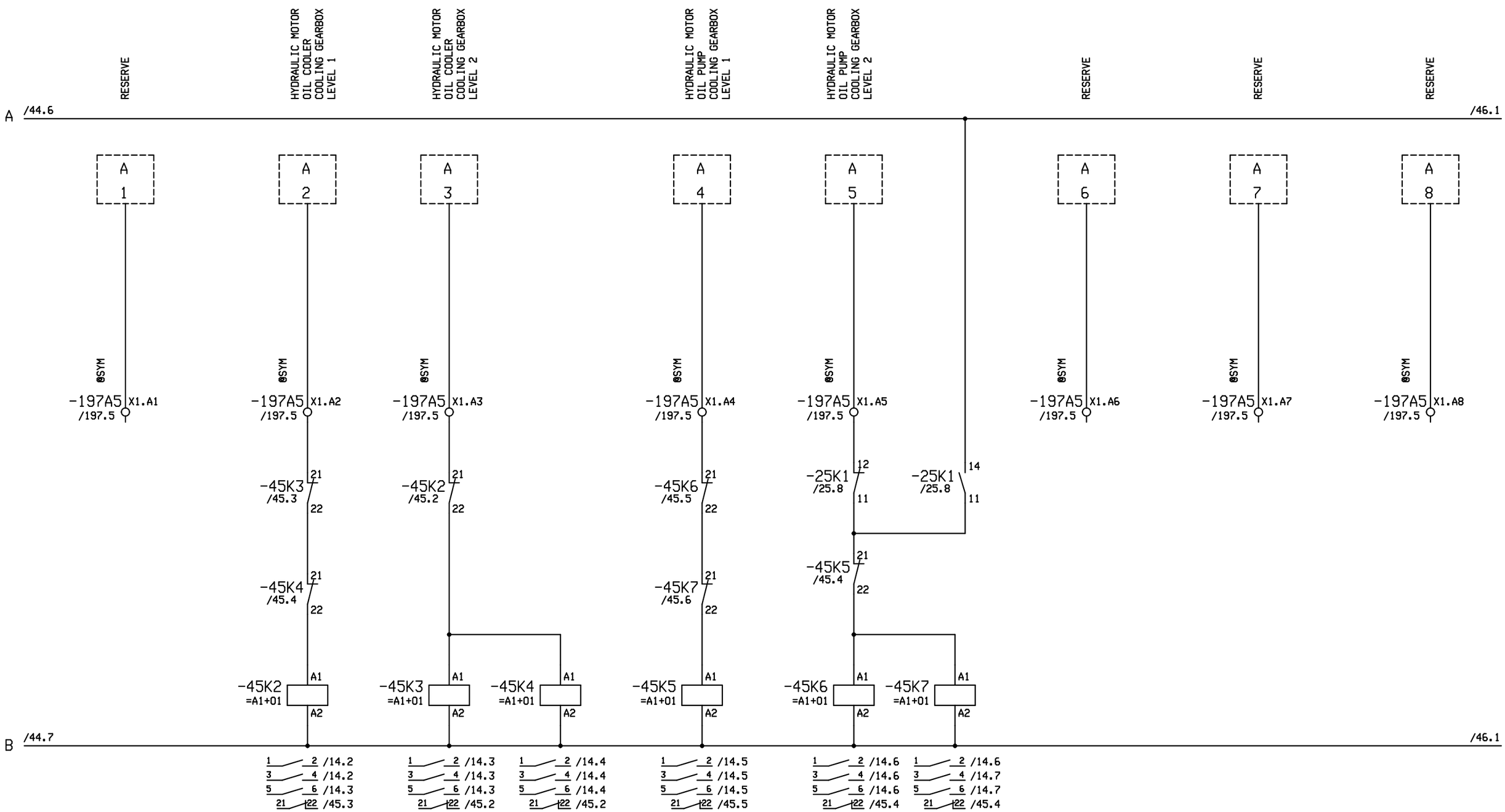

Revision	2.0	Drawn by	SST
Date	19.01.17	Dr.ch.by	FMa
File:	ANWAA4185		

10-MGD BaNa4
WAA0004185
DANANG / VIETNAM

Doppelmayr ®
Innova Patent GmbH
A-6960 WOLFURT / AUSTRIA

OUTPUT PLC BECKHOFF - OIL COOLER / OIL PUMP

DRIVE STATION | LV-CONTROL

=A1+01

Date	22.03.17
Sheet :	45
Cont.sheet:	46

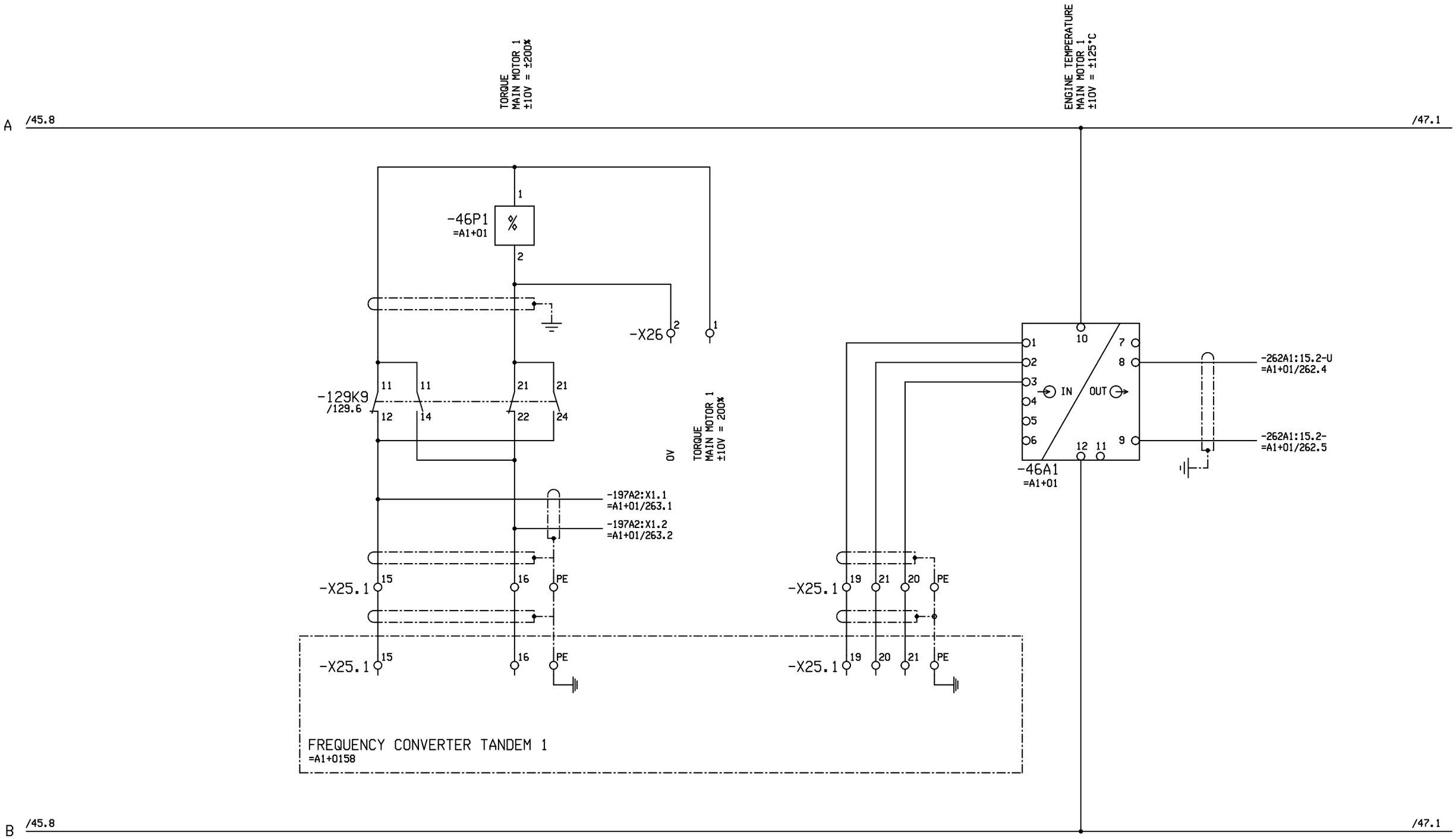

Revision	2.0	Drawn by	SST
Date	19.01.17	Dr.ch.by	FMa
File:	ANWAA4185		

10-MGD BaNa4
WAA0004185
DANANG / VIETNAM

Doppelmayr ®
Innova Patent GmbH
A-6960 WOLFURT / AUSTRIA

CONNECTIONS FREQUENCY CONV. - PANEL TANDEM 1

DRIVE STATION | LV-CONTROL

=A1+01

Date	03.06.16
Sheet :	46
Cont.sheet:	47

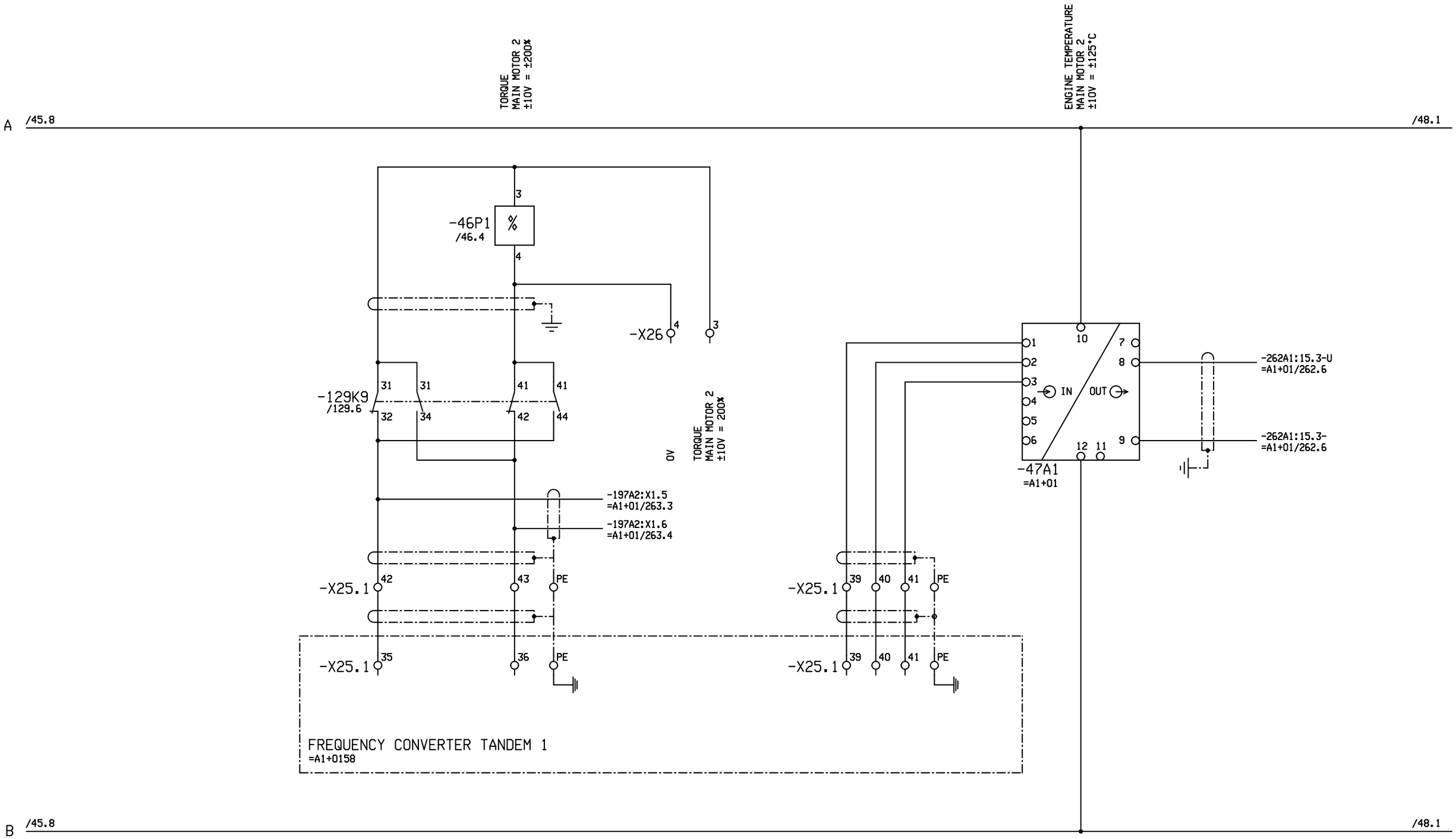

Revision	2.0	Drawn by	SST
Date	19.01.17	Dr.ch.by	FMa
File:	ANWAA4185		

10-MGD BaNa4
WAA0004185
DANANG / VIETNAM

Doppelmayr ®
Innova Patent GmbH
A-6960 WOLFURT / AUSTRIA

CONNECTIONS FREQUENCY CONV. - PANEL TANDEM 1

DRIVE STATION | LV-CONTROL

=A1+01

Date	03.06.16
Sheet :	47
Cont.sheet:	48

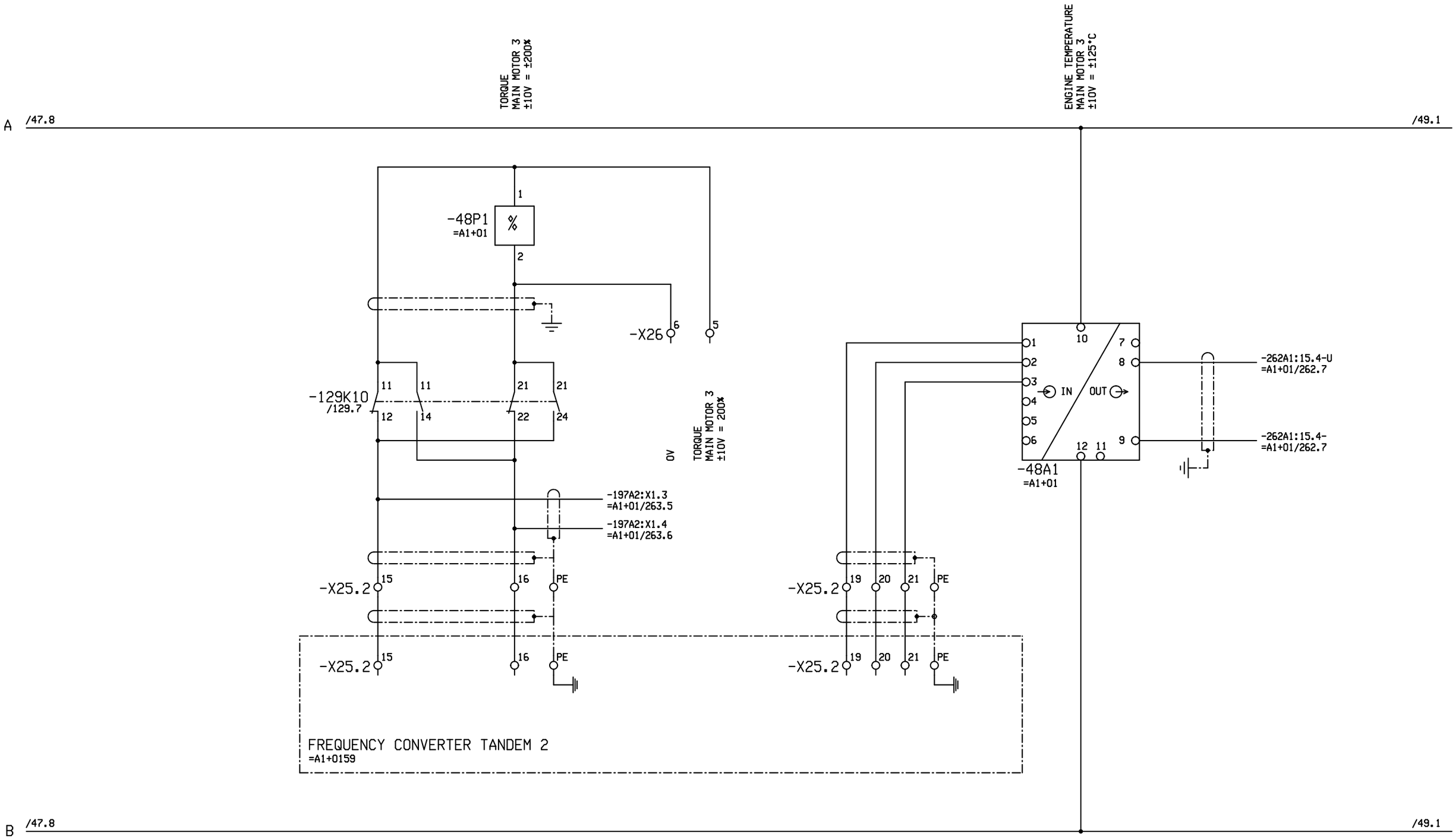

Revision	2.0	Drawn by	SST
Date	19.01.17	Dr.ch.by	FMa
File:	ANWAA4185		

10-MGD BaNa4
WAA0004185
DANANG / VIETNAM

Doppelmayr ®
Innova Patent GmbH
A-6960 WOLFURT / AUSTRIA

CONNECTIONS FREQUENCY CONV. - PANEL TANDEM 2

DRIVE STATION | LV-CONTROL

=A1+01

Date	03.06.16
Sheet :	48
Cont.sheet:	49

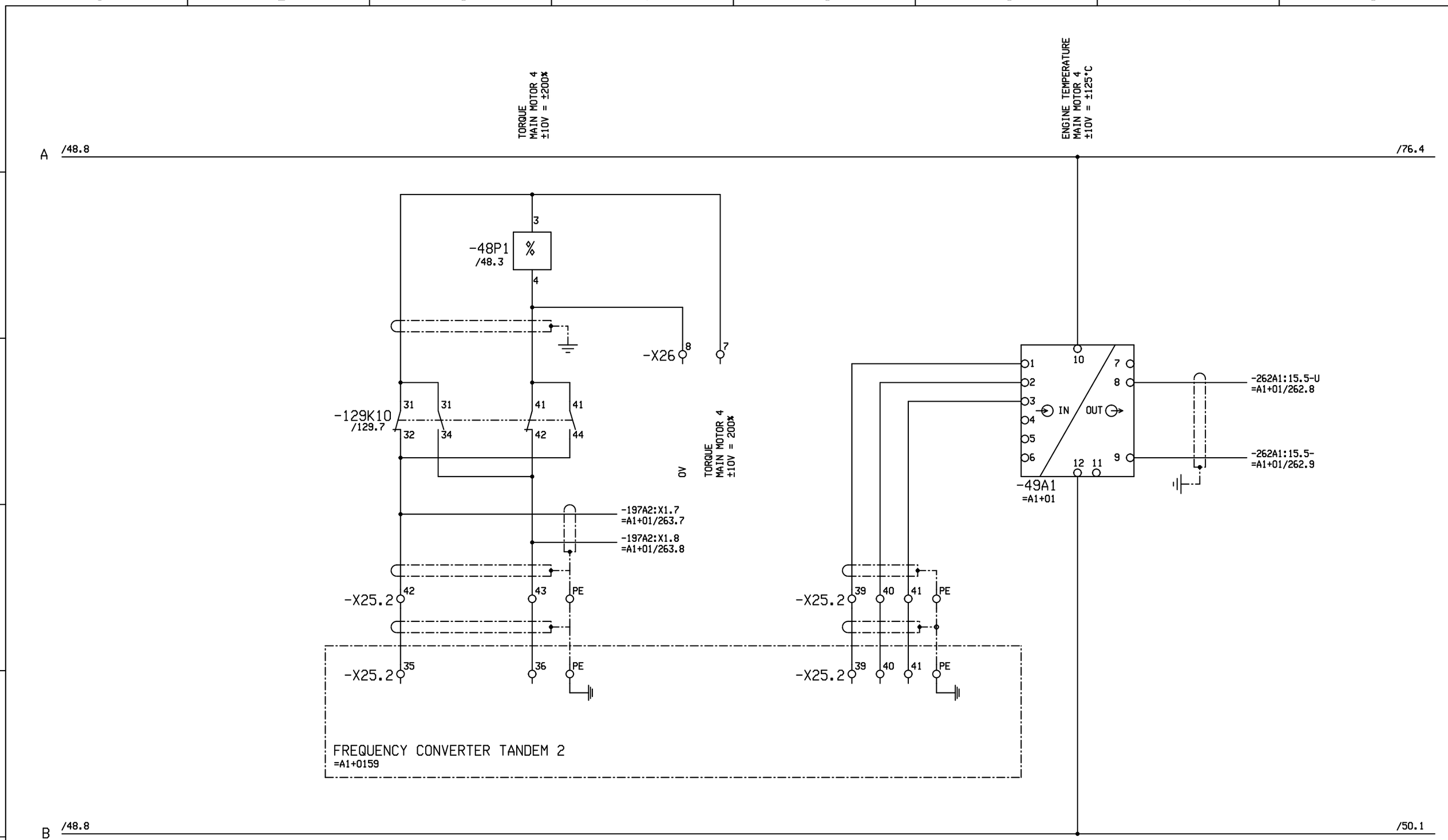

Revision	2.0	Drawn by	SST
Date	19.01.17	Dr.ch.by	FMa
File:	ANWAA4185		

10-MGD BaNa4
WAA0004185
DANANG / VIETNAM

Doppelmayr ®
Innova Patent GmbH
A-6960 WOLFURT / AUSTRIA

CONNECTIONS FREQUENCY CONV. - PANEL TANDEM 2

DRIVE STATION | LV-CONTROL

=A1+01

Date	03.06.16
Sheet :	49
Cont.sheet:	50

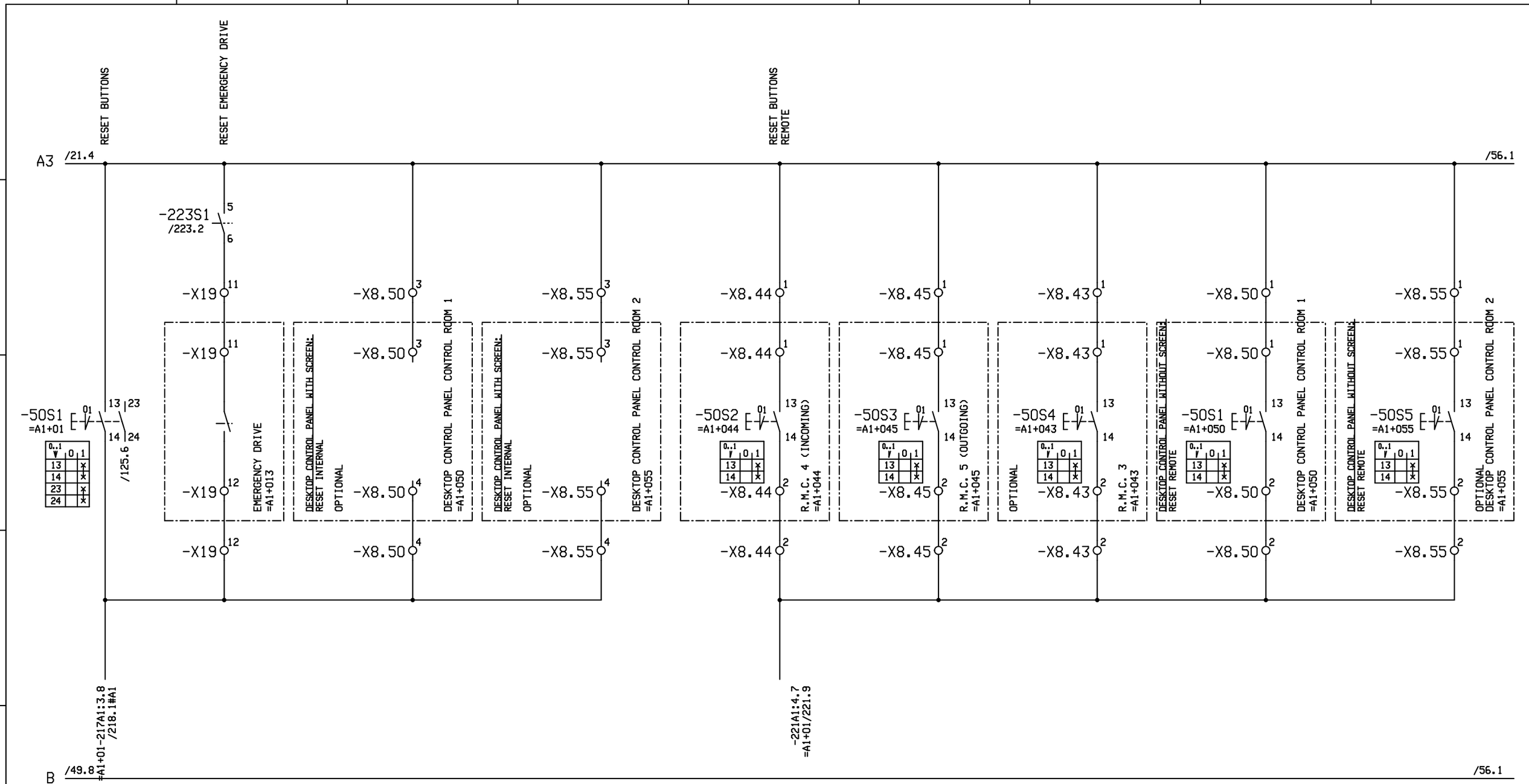

Revision	2.0	Drawn by	SST
Date	19.01.17	Dr.ch.by	FMa
File:	ANWAA4185		

10-MGD BaNa4
WAA0004185
DANANG / VIETNAM

Doppelmayr ®
Innova Patent GmbH
A-6960 WOLFURT / AUSTRIA

RESET BUTTONS

DRIVE STATION | LV-CONTROL

=A1+01

Date	10.05.17
Sheet :	50
Cont.sheet:	56

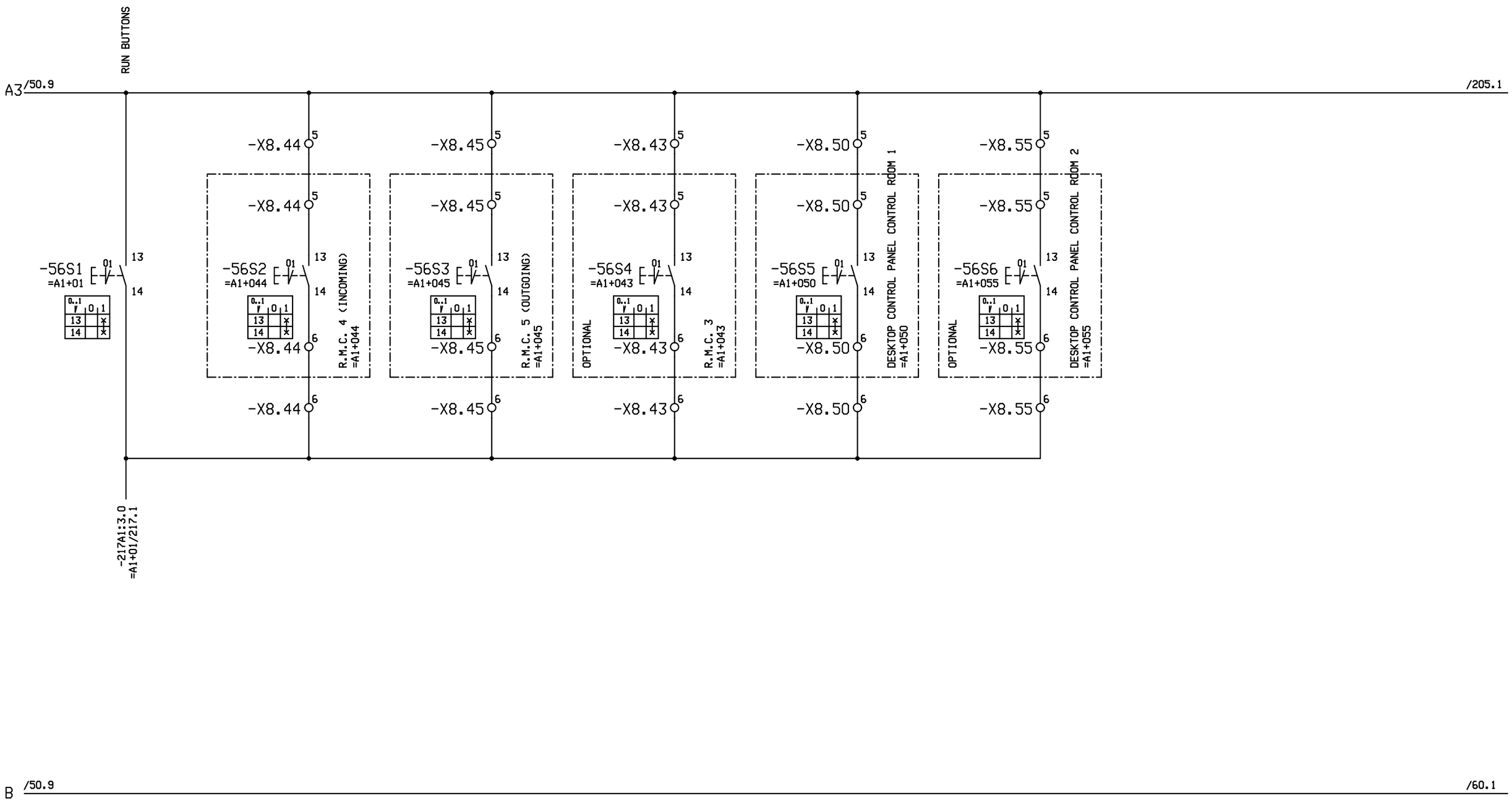

Revision	2.0	Drawn by	SST
Date	19.01.17	Dr.ch.by	FMa
File:	ANWAA4185		

10-MGD BaNa4
WAA0004185
DANANG / VIETNAM

Doppelmayr ®
Innova Patent GmbH
A-6960 WOLFURT / AUSTRIA

RUN BUTTONS

DRIVE STATION | LV-CONTROL

=A1+01

Date	03.06.16
Sheet :	56
Cont.sheet:	60

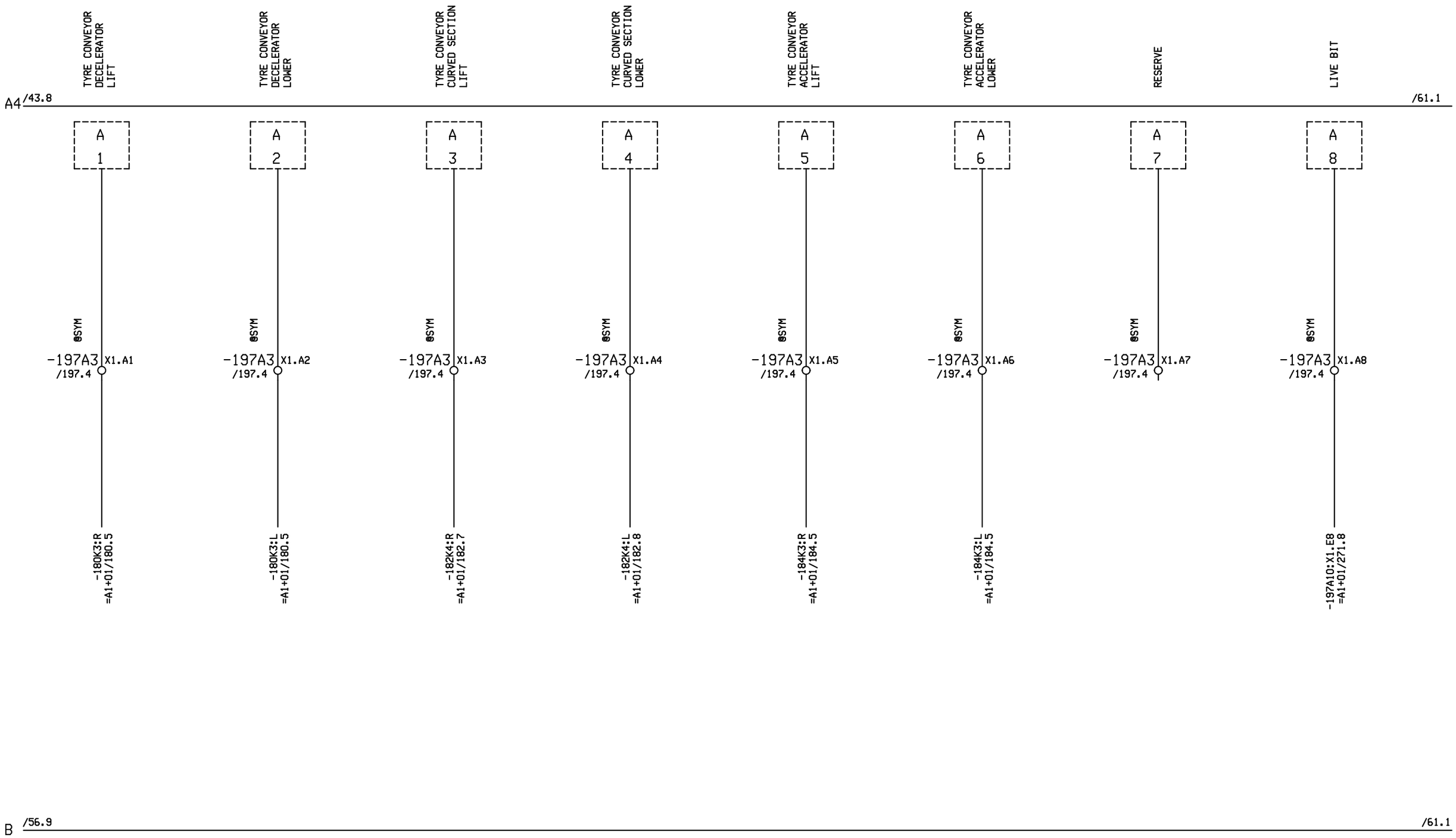

Revision	2.0	Drawn by	SST
Date	19.01.17	Dr.ch.by	FMa
File:	ANWAA4185		

10-MGD BaNa4
WAA0004185
DANANG / VIETNAM

Doppelmayr ®
Innova Patent GmbH
A-6960 WOLFURT / AUSTRIA

OUTPUT PLC BECKHOFF - TYRE CONVEYOR

DRIVE STATION | LV-CONTROL

=A1+01

Date	20.04.16
Sheet :	60
Cont.sheet:	61

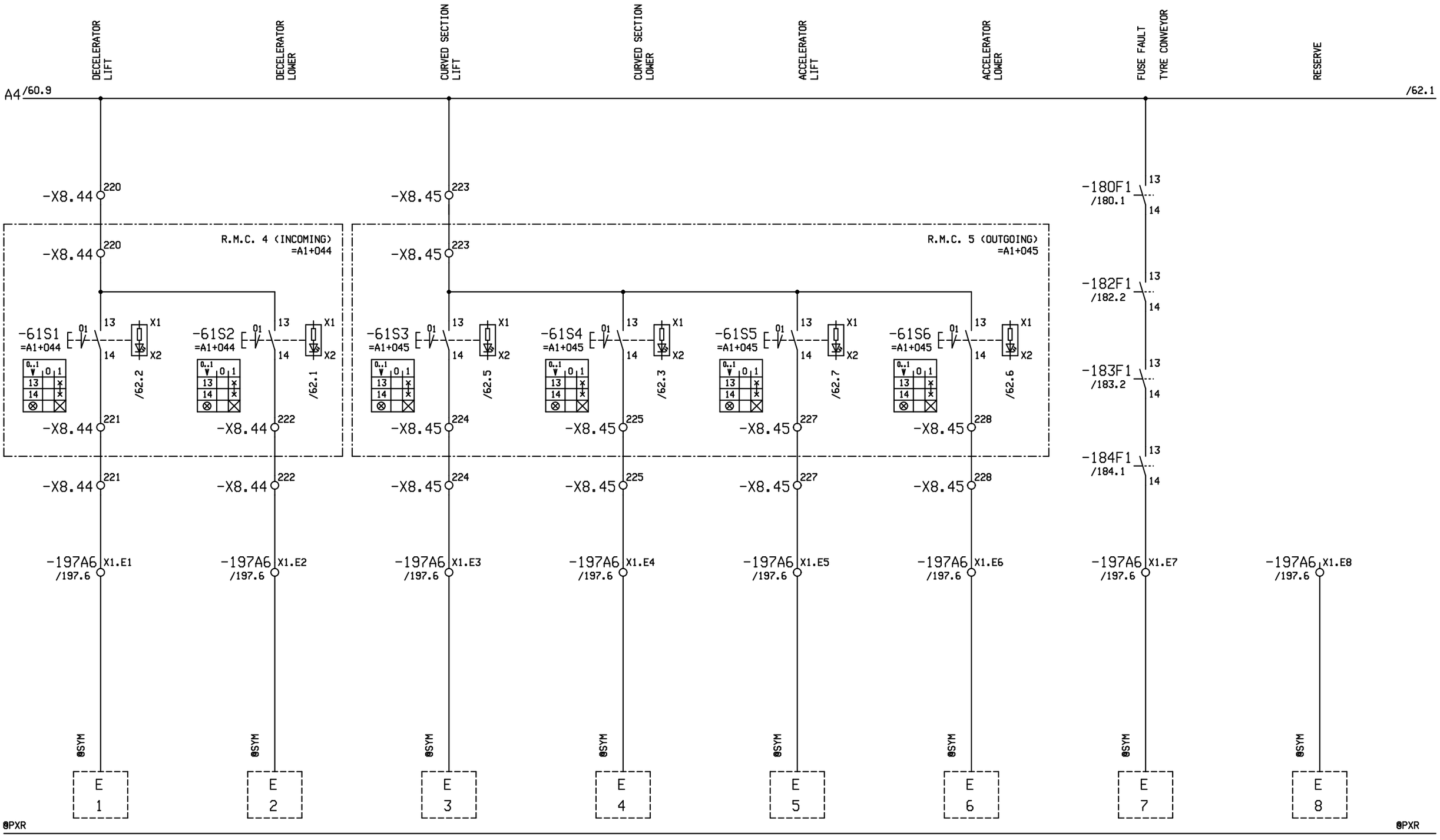

Revision	2.0	Drawn by	SST
Date	19.01.17	Dr.ch.by	FMa

File: ANWAA4185

10-MGD BaNa4
WAA0004185
DANANG / VIETNAM

Doppelmayr ®
Innova Patent GmbH
A-6960 WOLFURT / AUSTRIA

INPUT PLC BECKHOFF - BUTTONS - TYRE CONVEYOR

DRIVE STATION | LV-CONTROL

=A1+01

Date	18.10.16
Sheet :	61
Cont.sheet:	62

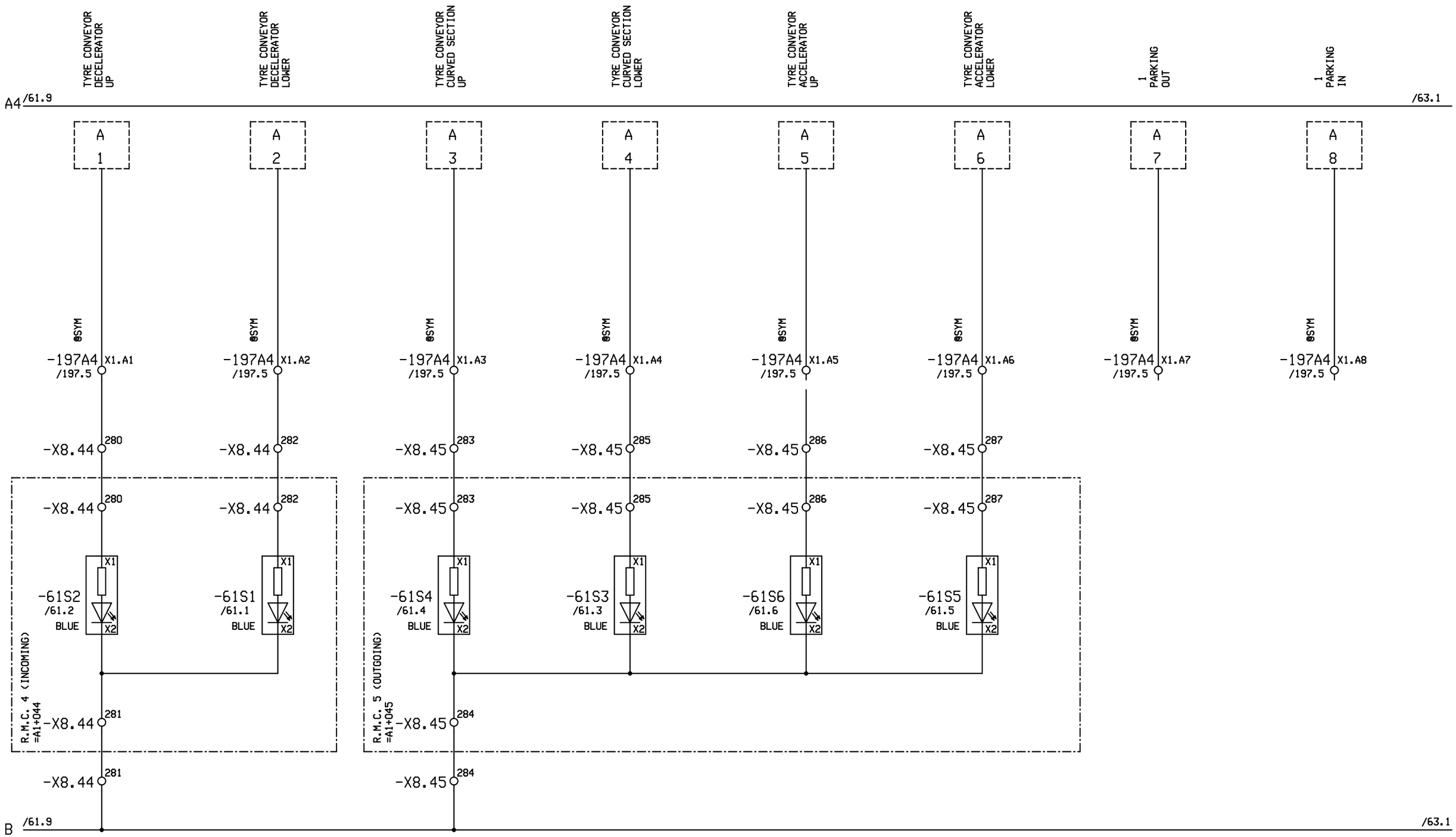

Revision	2.0	Drawn by	SST
Date	19.01.17	Dr.ch.by	FMa
File:	ANWAA4185		

10-MGD BaNa4
WAA0004185
DANANG / VIETNAM

Doppelmayr ®
Innova Patent GmbH
A-6960 WOLFURT / AUSTRIA

OUTPUT PLC BECKHOFF - CONTROL LIGHTS - TYRE CONVEYOR

DRIVE STATION | LV-CONTROL

=A1+01

Date	19.01.17
Sheet :	62
Cont.sheet:	63

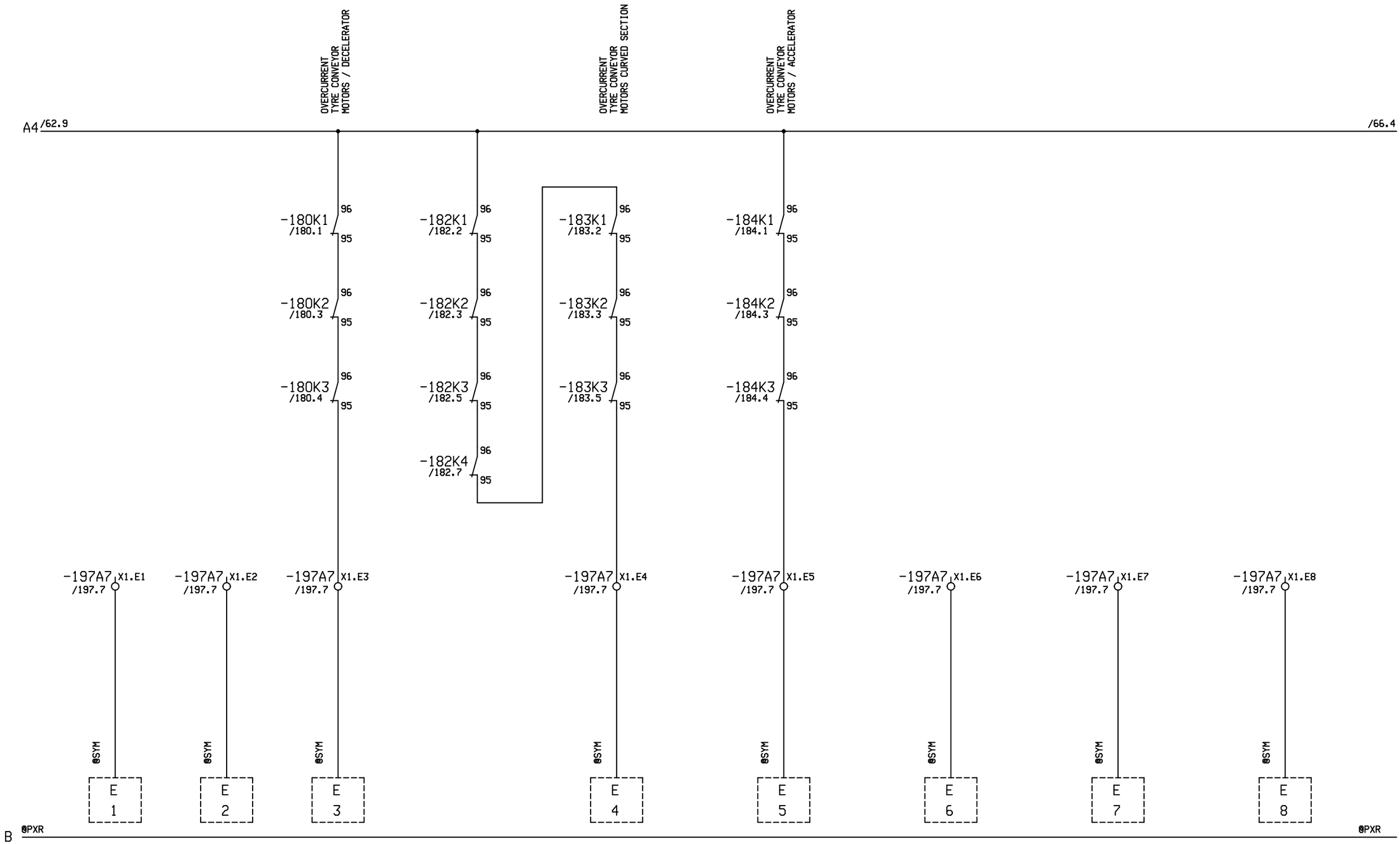

Revision	2.0	Drawn by	SST
Date	19.01.17	Dr.ch.by	FMa

File: ANWAA4185

10-MGD BaNa4
WAA0004185
DANANG / VIETNAM

Doppelmayr ®
Innova Patent GmbH
A-6960 WOLFURT / AUSTRIA

INPUT PLC BECKHOFF - OVERCURRENT - TYRE CONVEYOR

DRIVE STATION | LV-CONTROL

=A1+01

Date	18.10.16
Sheet :	63
Cont.sheet:	64

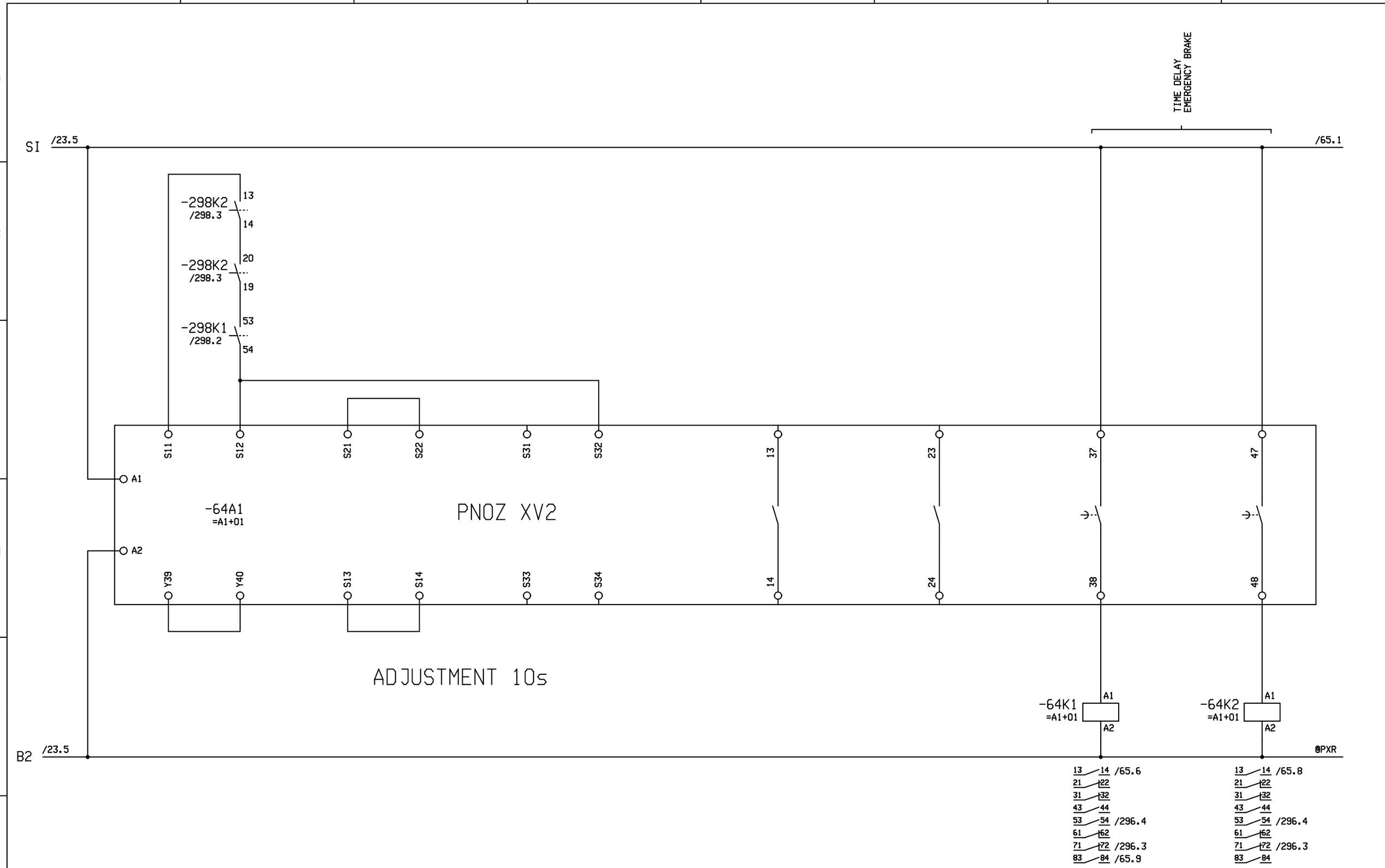

Revision	2.0	Drawn by	SST
Date	19.01.17	Dr.ch.by	FMa
File:	ANWAA4185		

10-MGD BaNa4
WAA0004185
DANANG / VIETNAM

Doppelmayr ®
Innova Patent GmbH
A-6960 WOLFURT / AUSTRIA

EMERGENCY BRAKE

DRIVE STATION | LV-CONTROL

=A1+01

Date	20.01.17
Sheet :	64
Cont.sheet:	65

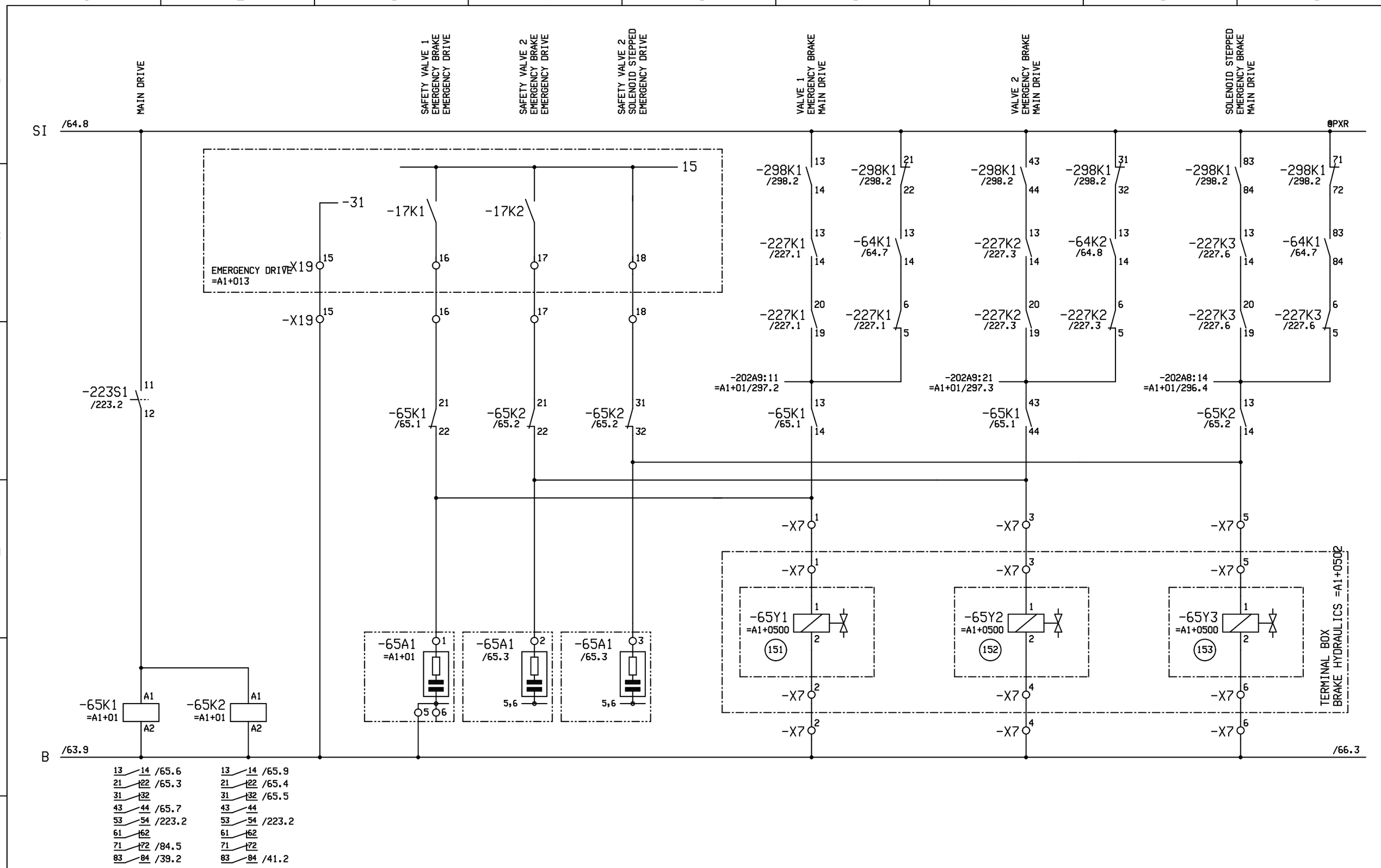

Revision	2.0	Drawn by	SST
Date	19.01.17	Dr.ch.by	FMa
File:	ANWAA4185		

10-MGD BaNa4
WAA0004185
DANANG / VIETNAM

Doppelmayr ®
Innova Patent GmbH
A-6960 WOLFURT / AUSTRIA

BRAKE HYDRAULICS

DRIVE STATION | LV-CONTROL

=A1+01

Date	20.01.17
Sheet :	65
Cont.sheet:	66

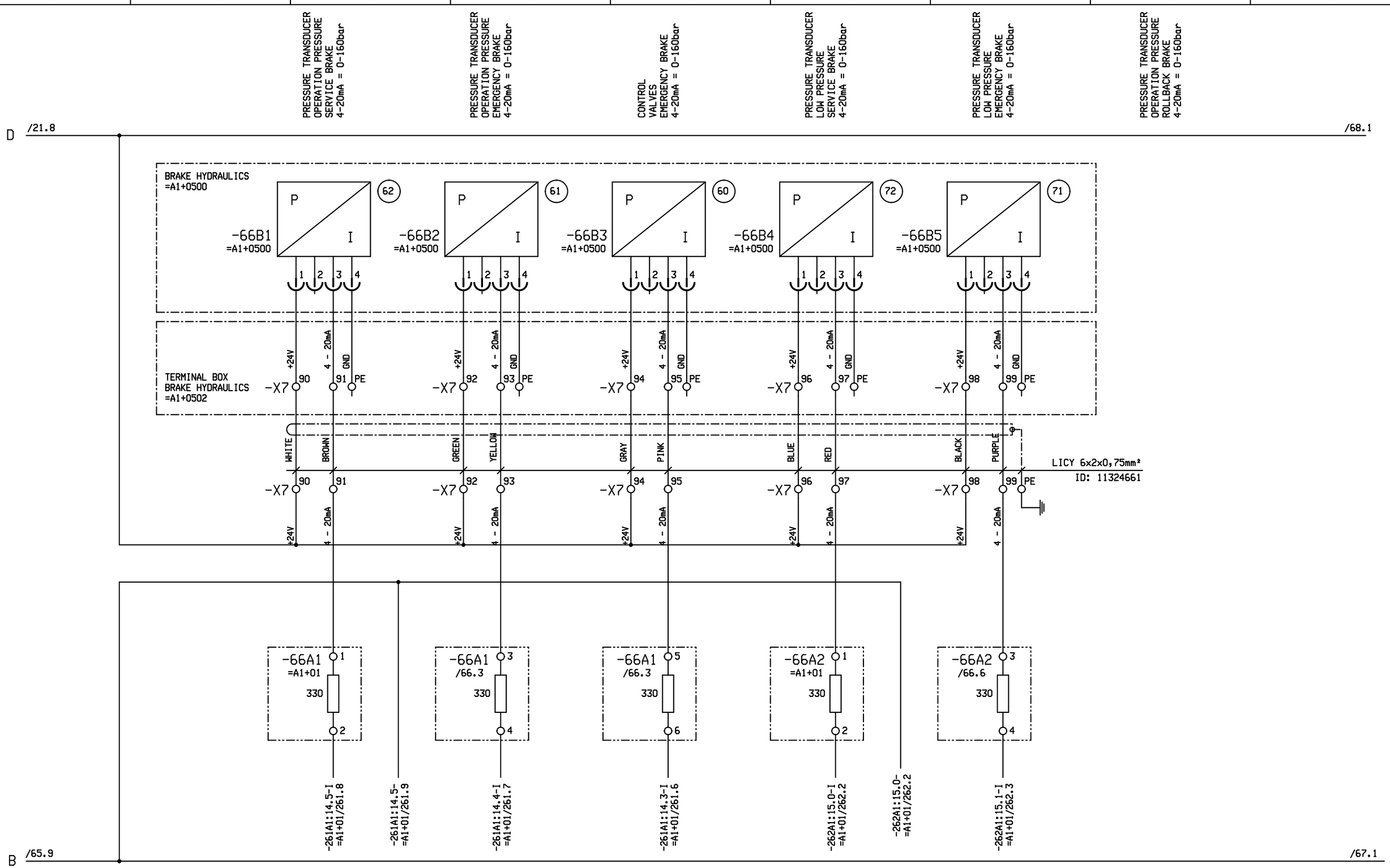

Revision	2.0	Drawn by	SST
Date	19.01.17	Dr.ch.by	FMa
File:	ANWAA4185		

10-MGD BaNa4
WAA0004185
DANANG / VIETNAM

Doppelmayr ®
Innova Patent GmbH
A-6960 WOLFURT / AUSTRIA

BRAKE HYDRAULICS

DRIVE STATION | LV-CONTROL

=A1+01

Date	03.06.16
Sheet :	66
Cont.sheet:	67

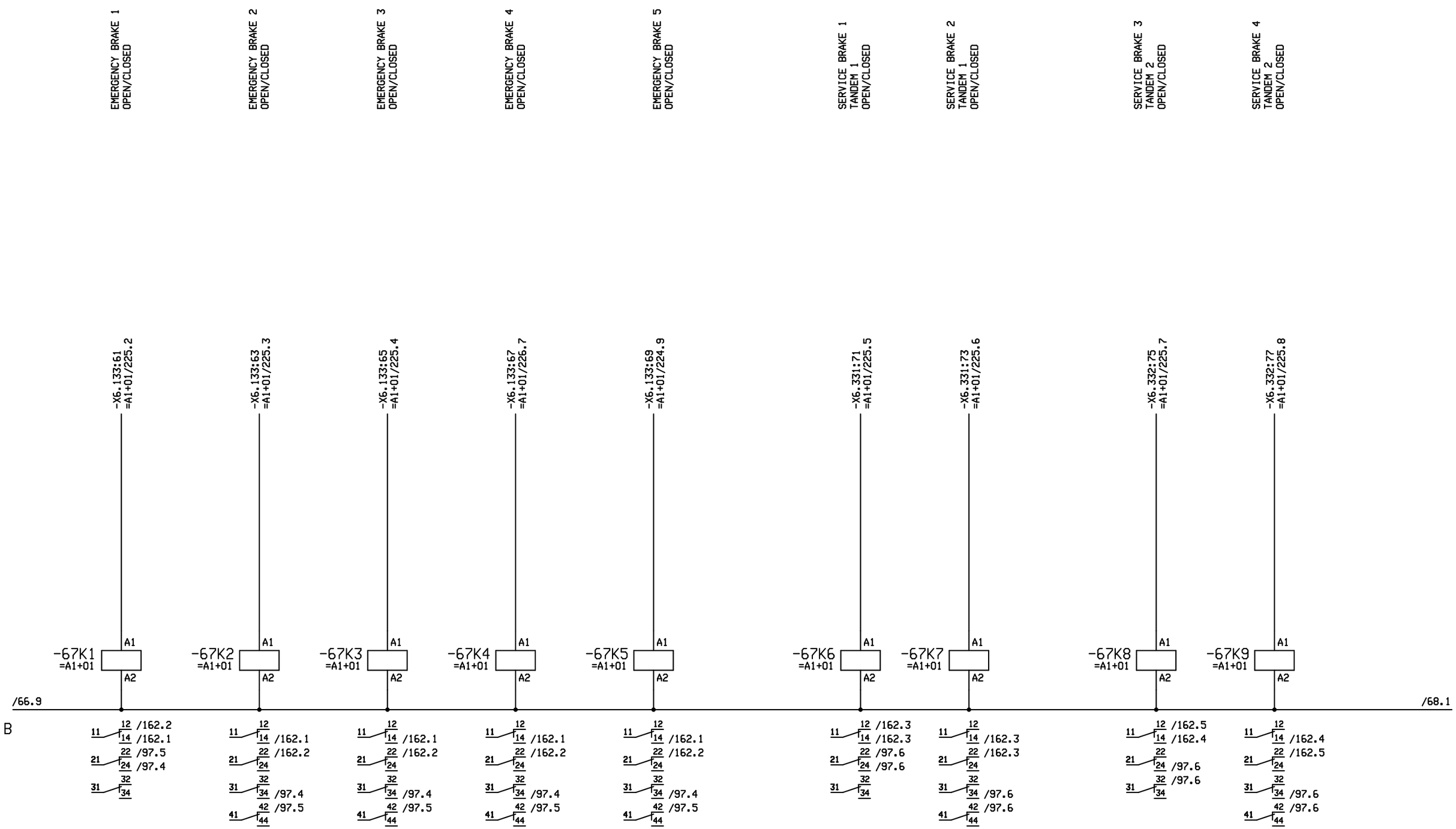

Revision	2.0	Drawn by	SST
Date	19.01.17	Dr.ch.by	FMa
File:	ANWAA4185		

10-MGD BaNa4
WAA0004185
DANANG / VIETNAM

Doppelmayr ®
Innova Patent GmbH
A-6960 WOLFURT / AUSTRIA

LIMIT SWITCH BRAKE

DRIVE STATION | LV-CONTROL

=A1+01

Date	18.10.16
Sheet :	67
Cont.sheet:	68

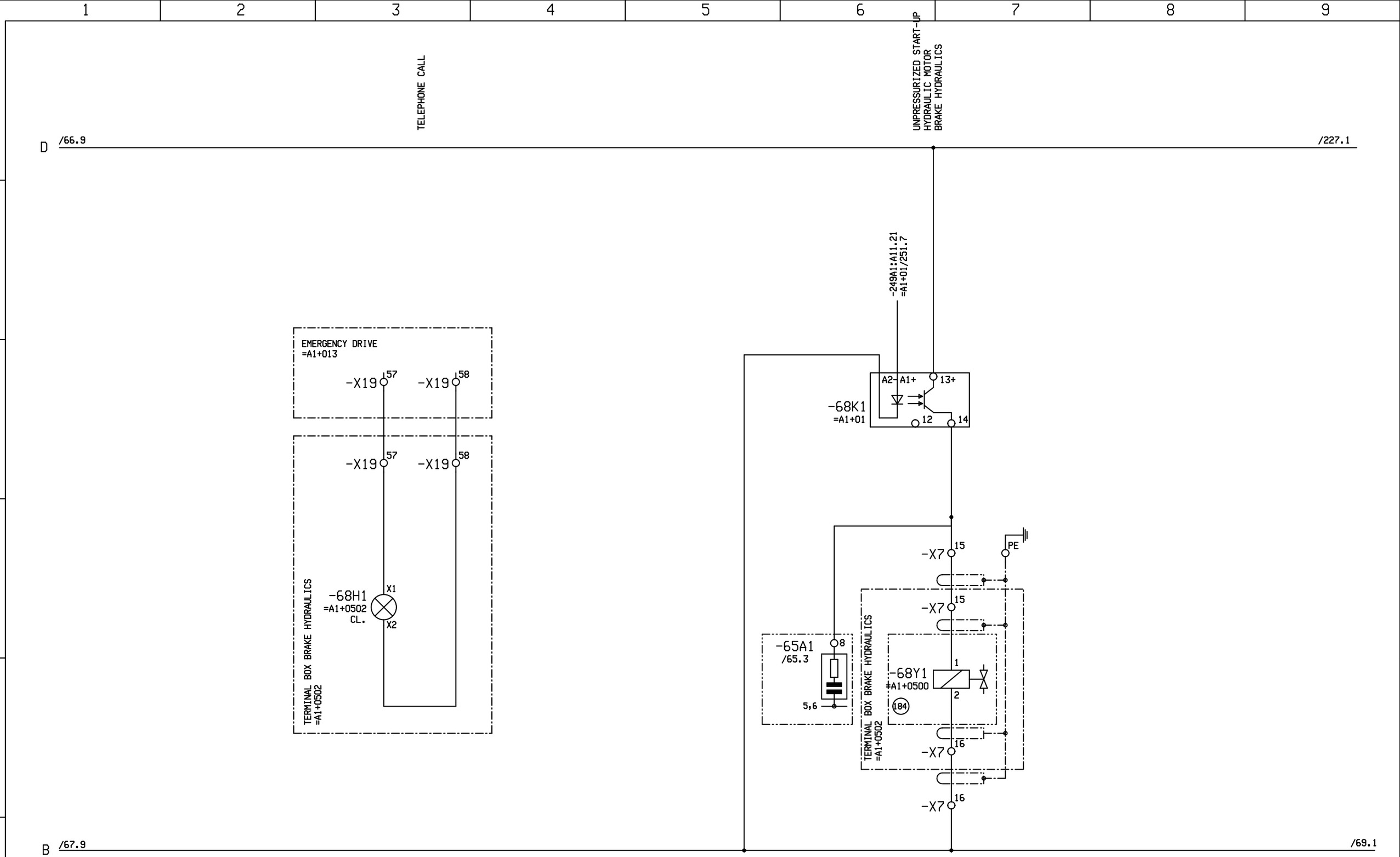

Revision	2.0	Drawn by	SST
Date	19.01.17	Dr.ch.by	FMa
File:	ANWAA4185		

10-MGD BaNa4
WAA0004185
DANANG / VIETNAM

Doppelmayr ®
Innova Patent GmbH
A-6960 WOLFURT / AUSTRIA

BRAKE HYDRAULICS

DRIVE STATION | LV-CONTROL

=A1+01

Date	10.06.16
Sheet :	68
Cont.sheet:	69

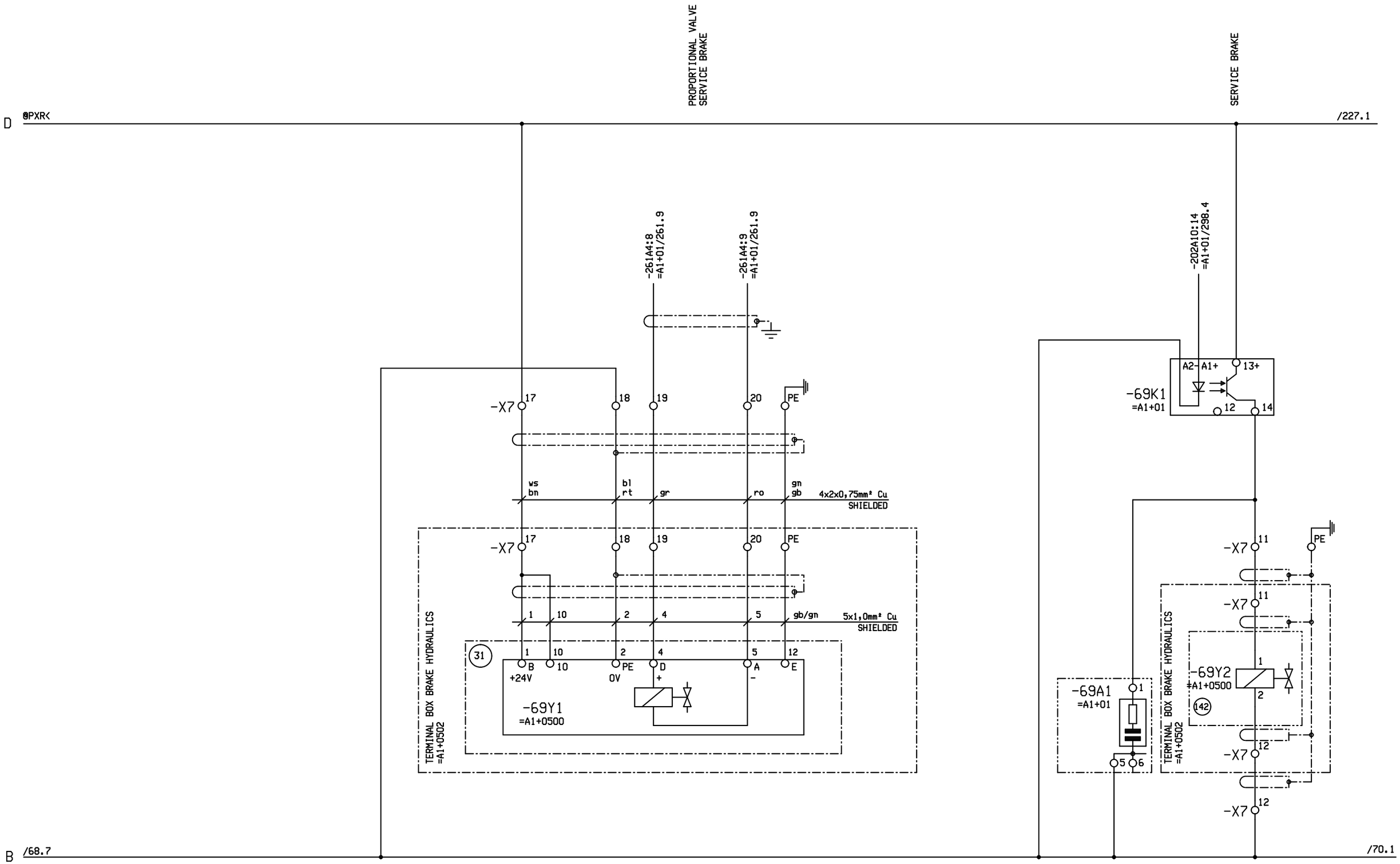

Revision	2.0	Drawn by	SST
Date	19.01.17	Dr.ch.by	FMa
File:	ANWAA4185		

10-MGD BaNa4
WAA0004185
DANANG / VIETNAM

Doppelmayr ®
Innova Patent GmbH
A-6960 WOLFURT / AUSTRIA

BRAKE HYDRAULICS

DRIVE STATION | LV-CONTROL

=A1+01

Date	20.01.17
Sheet :	69
Cont.sheet:	70

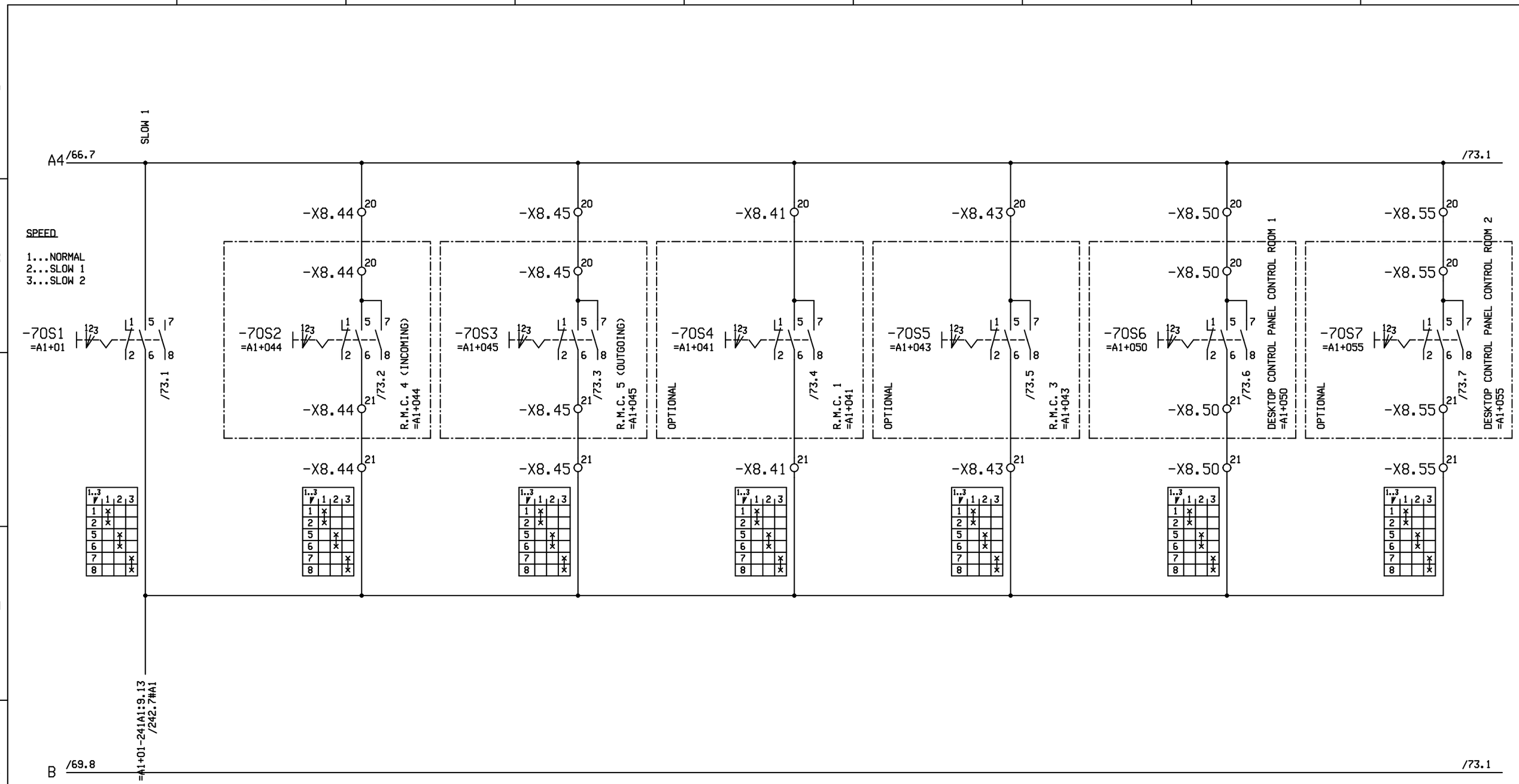

Revision	2.0	Drawn by	SST
Date	19.01.17	Dr.ch.by	FMa
File:	ANWAA4185		

10-MGD BaNa4
WAA0004185
DANANG / VIETNAM

Doppelmayr ®
Innova Patent GmbH
A-6960 WOLFURT / AUSTRIA

SLOW 1

DRIVE STATION | LV-CONTROL

=A1+01

Date	07.06.16
Sheet :	70
Cont.sheet:	73

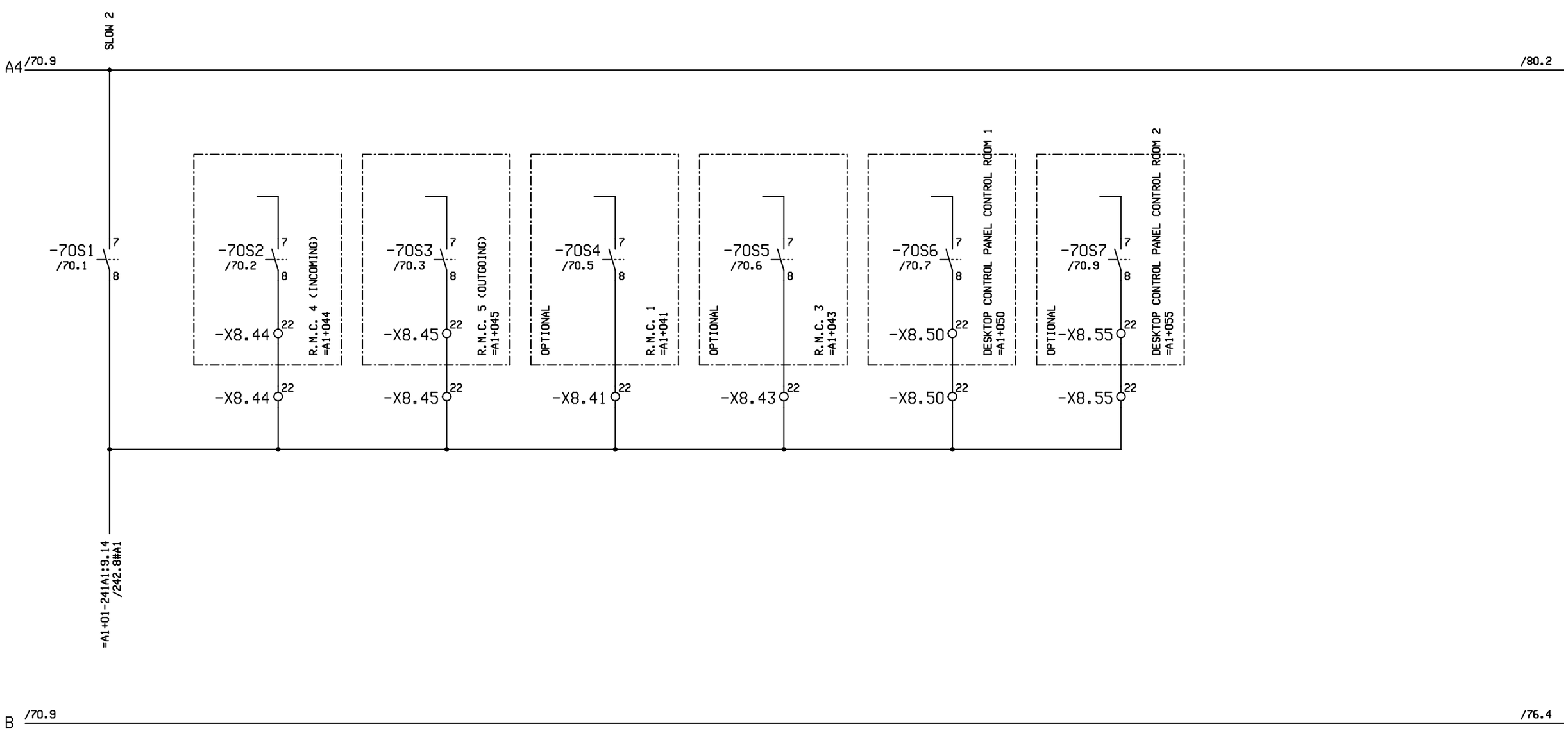

Revision	2.0	Drawn by	SST
Date	19.01.17	Dr.ch.by	FMa
File:	ANWAA4185		

10-MGD BaNa4
WAA0004185
DANANG / VIETNAM

Doppelmayr ®
Innova Patent GmbH
A-6960 WOLFURT / AUSTRIA

SLOW 2

DRIVE STATION | LV-CONTROL

=A1+01

Date	02.06.16
Sheet :	73
Cont.sheet:	75

SPEED
TANDEM 1
+/-8,5V = 0-6,5m/s

SPEED
TANDEM 2
+/-8,5V = 0-6,5m/s

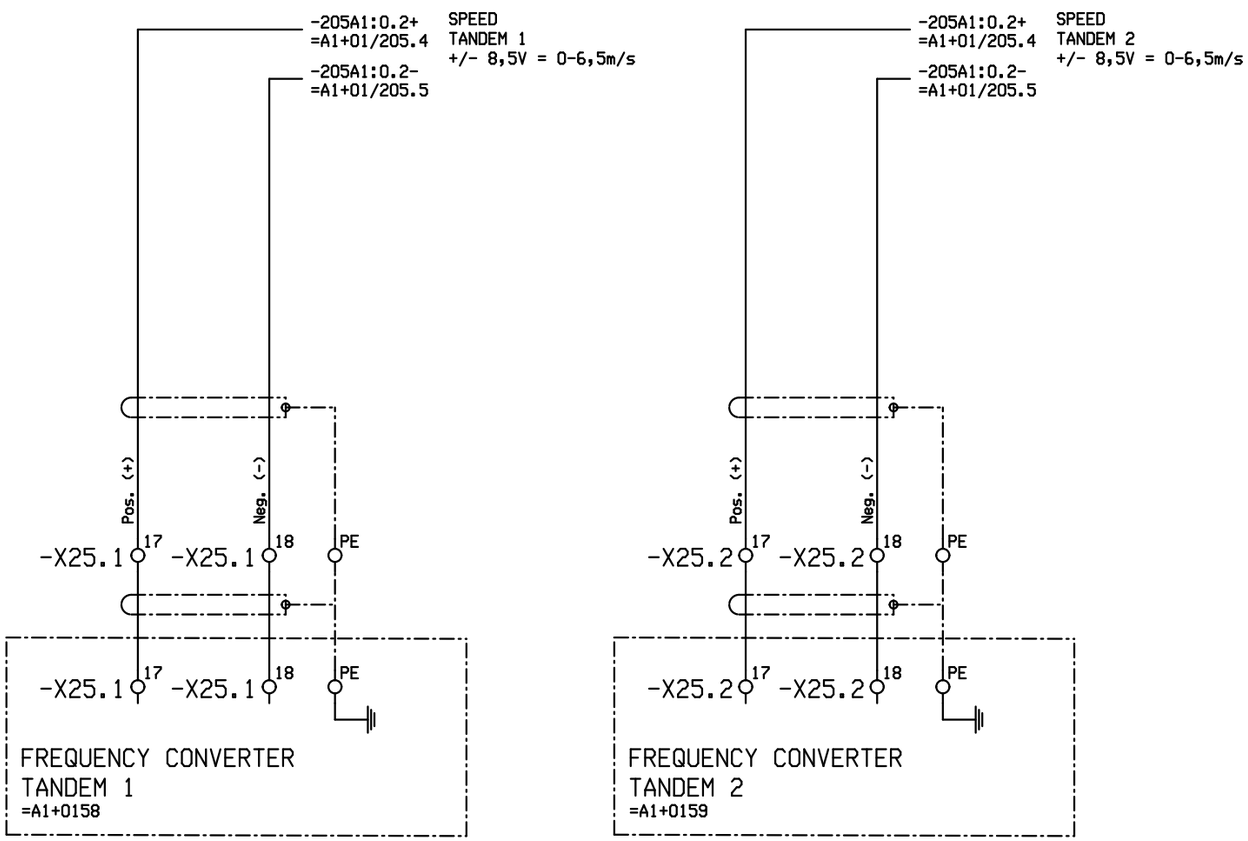

Revision	2.0	Drawn by	SST
Date	19.01.17	Dr.ch.by	FMa
File:	ANWAA4185		

10-MGD BaNa4
WAA0004185
DANANG / VIETNAM

Doppelmayr ®
Innova Patent GmbH
A-6960 WOLFURT / AUSTRIA

MOTOR TACHO

DRIVE STATION | LV-CONTROL

=A1+01

Date	03.06.16
Sheet :	75
Cont.sheet:	76

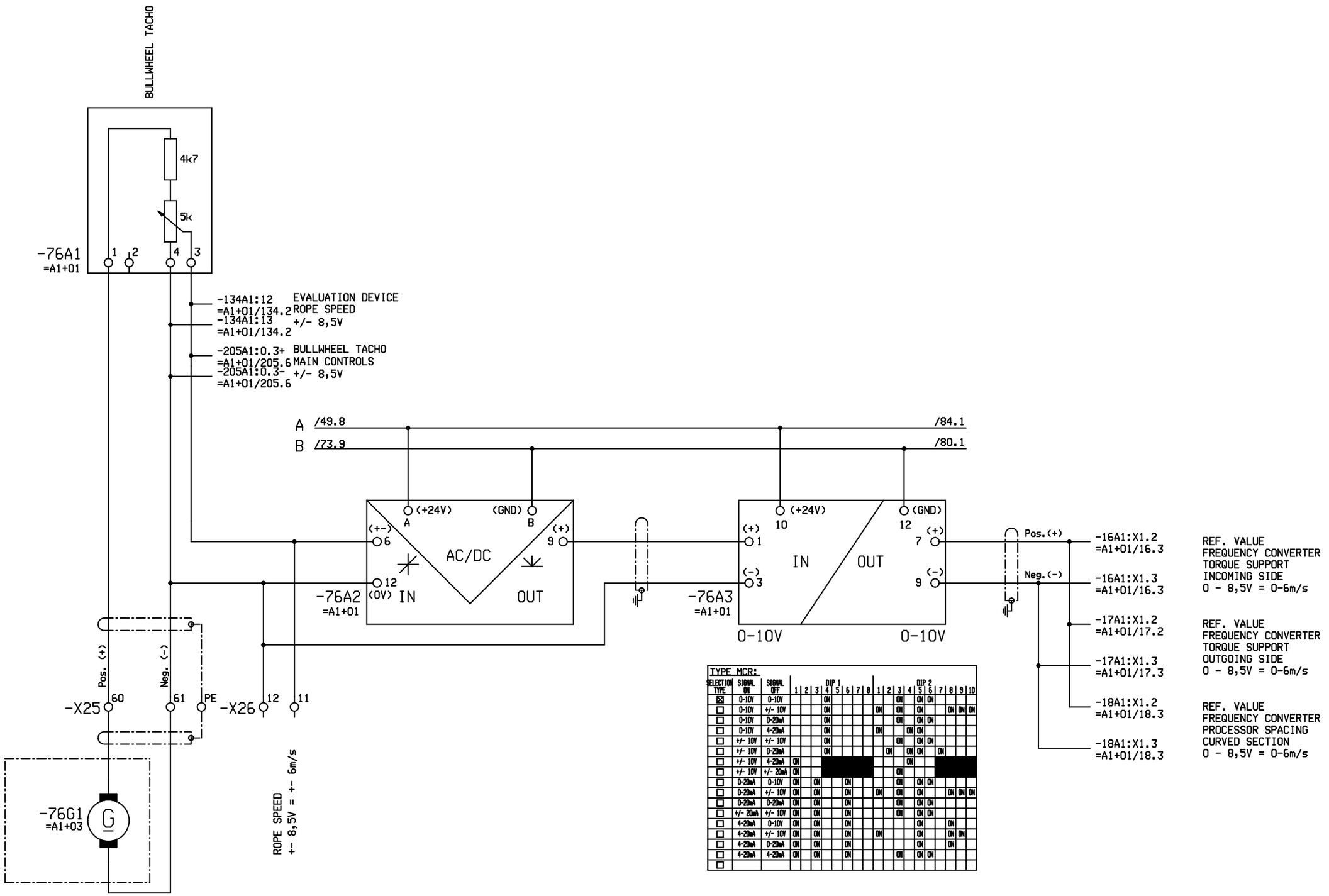

Revision	2.0	Drawn by	SST
Date	19.01.17	Dr.ch.by	FMa
File:	ANWAA4185		

10-MGD BaNa4
WAA0004185
DANANG / VIETNAM

Doppelmayr ®
Innova Patent GmbH
A-6960 WOLFURT / AUSTRIA

TACHO

DRIVE STATION | LV-CONTROL

=A1+01

Date	09.06.16
Sheet :	76
Cont.sheet:	80

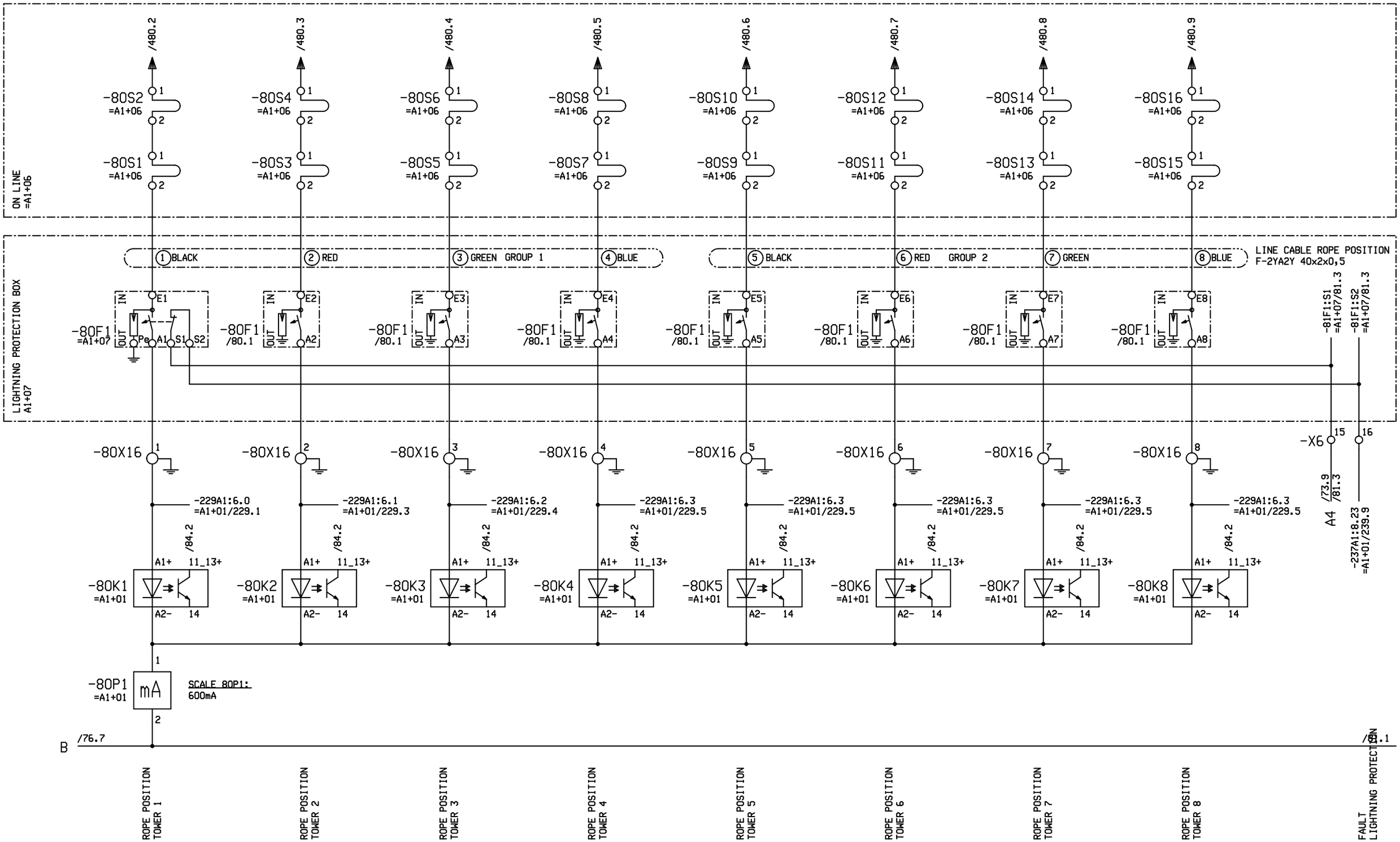

Revision	2.0	Drawn by	SST
Date	19.01.17	Dr.ch.by	FMa
File:	ANWAA4185		

10-MGD BaNa4
WAA0004185
DANANG / VIETNAM

Doppelmayr ®
Innova Patent GmbH
A-6960 WOLFURT / AUSTRIA

ROPE POSITION MONITORING

DRIVE STATION | LV-CONTROL

=A1+01

Date	19.01.17
Sheet :	80
Cont.sheet:	81

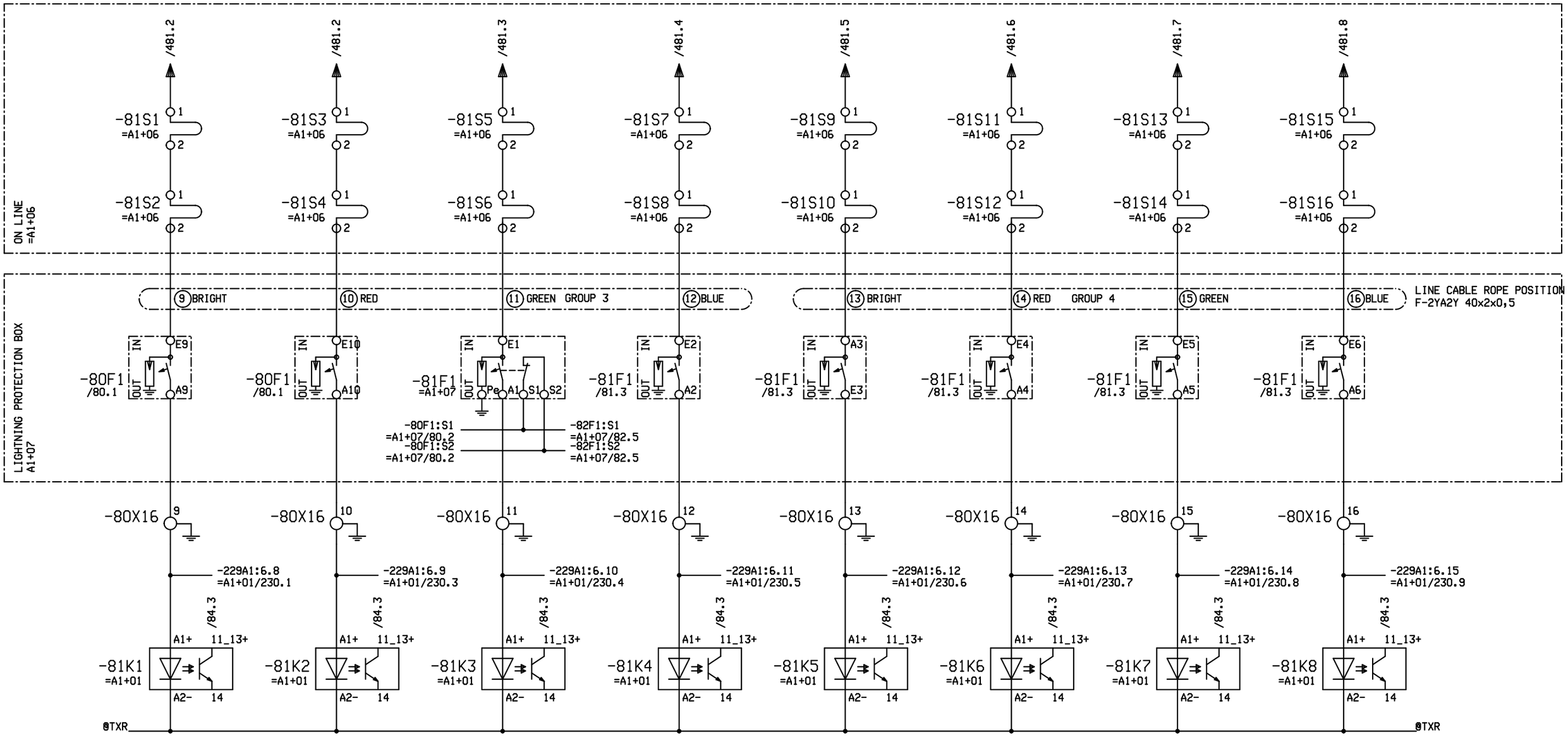

Revision	2.0	Drawn by	SST
Date	19.01.17	Dr.ch.by	FMa
File:	ANWAA4185		

10-MGD BaNa4
WAA0004185
DANANG / VIETNAM

Doppelmayr ®
Innova Patent GmbH
A-6960 WOLFURT / AUSTRIA

ROPE POSITION MONITORING

DRIVE STATION | LV-CONTROL

=A1+01

Date	06.06.16
Sheet :	81
Cont.sheet:	82

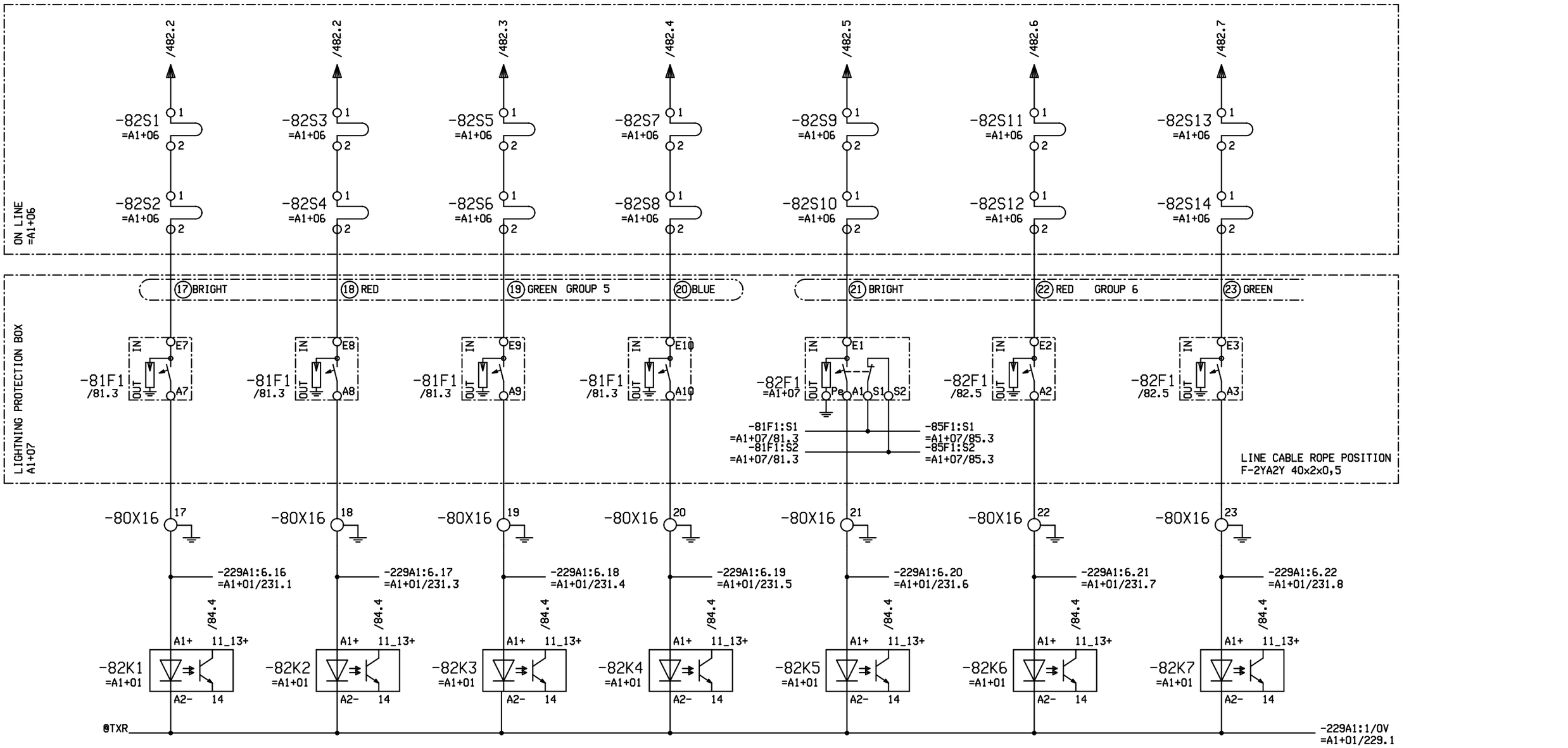

Revision	2.0	Drawn by	SST
Date	19.01.17	Dr.ch.by	FMa
File:	ANWAA4185		

10-MGD BaNa4
WAA0004185
DANANG / VIETNAM

Doppelmayr ®
Innova Patent GmbH
A-6960 WOLFURT / AUSTRIA

ROPE POSITION MONITORING

DRIVE STATION | LV-CONTROL

=A1+01

Date	22.06.16
Sheet :	82
Cont.sheet:	84

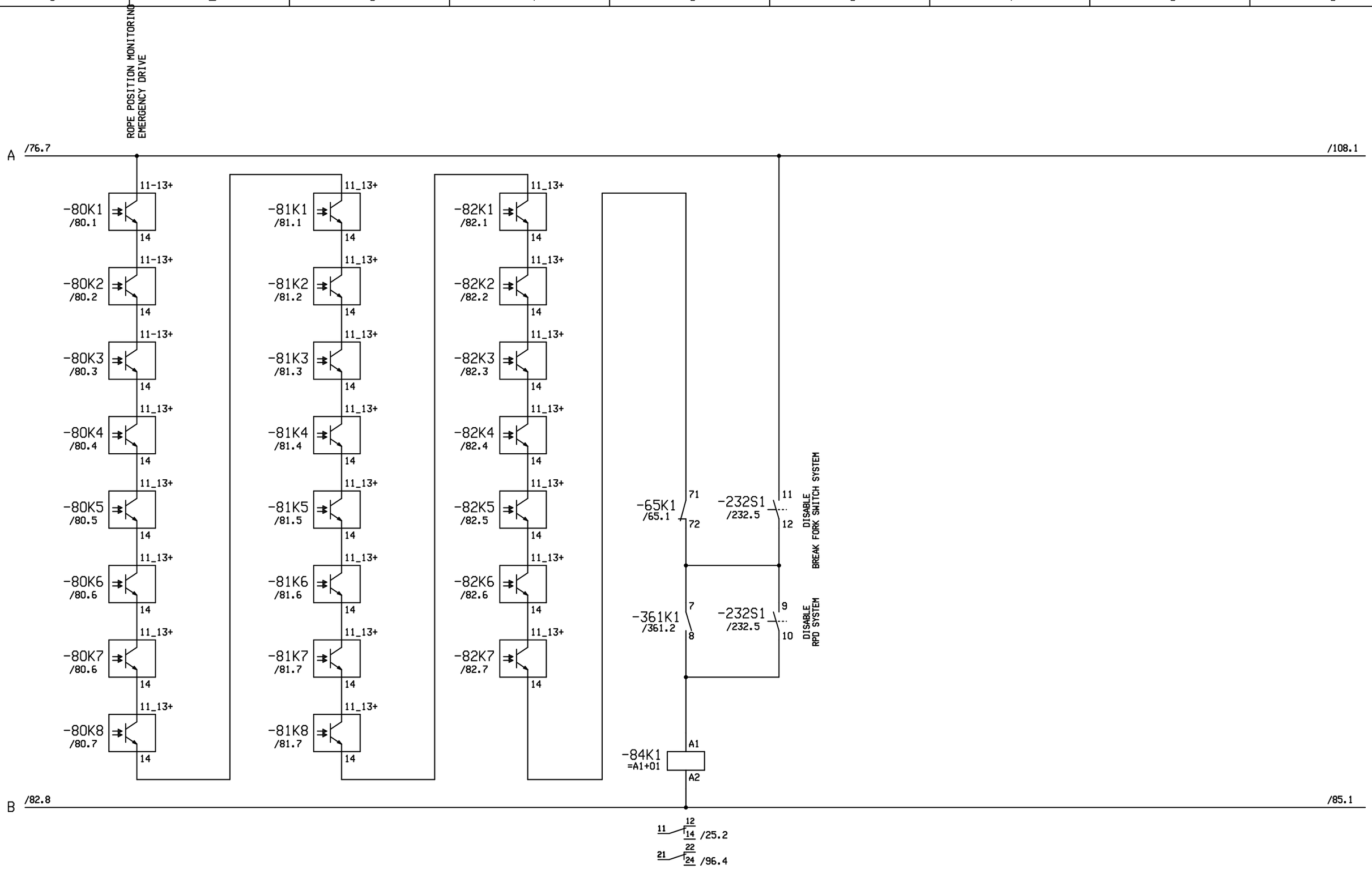

Revision	2.0	Drawn by	SST
Date	19.01.17	Dr.ch.by	FMa

File: ANWAA4185

10-MGD BaNa4
WAA0004185
DANANG / VIETNAM

Doppelmayr ®
Innova Patent GmbH
A-6960 WOLFURT / AUSTRIA

ROPE POSITION MONITORING

DRIVE STATION | LV-CONTROL

=A1+01

Date	20.01.17
Sheet :	84
Cont.sheet:	85

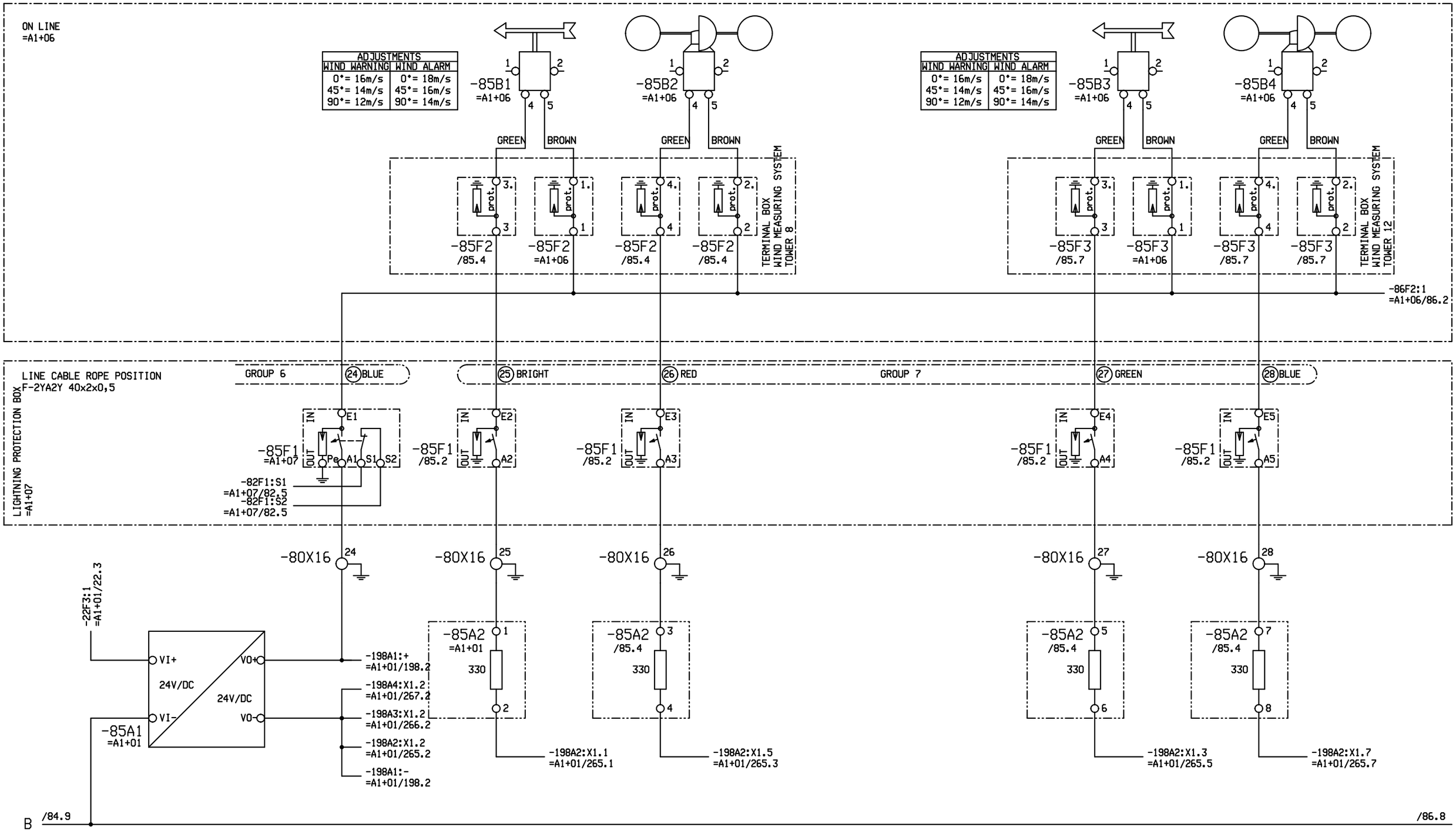

Revision	2.0	Drawn by	SST
Date	19.01.17	Dr.ch.by	FMa
File:	ANWAA4185		

10-MGD BaNa4
WAA0004185
DANANG / VIETNAM

Doppelmayr ®
Innova Patent GmbH
A-6960 WOLFURT / AUSTRIA

WIND WARNING

DRIVE STATION | LV-CONTROL

=A1+01

Date	10.05.17
Sheet :	85
Cont.sheet:	86

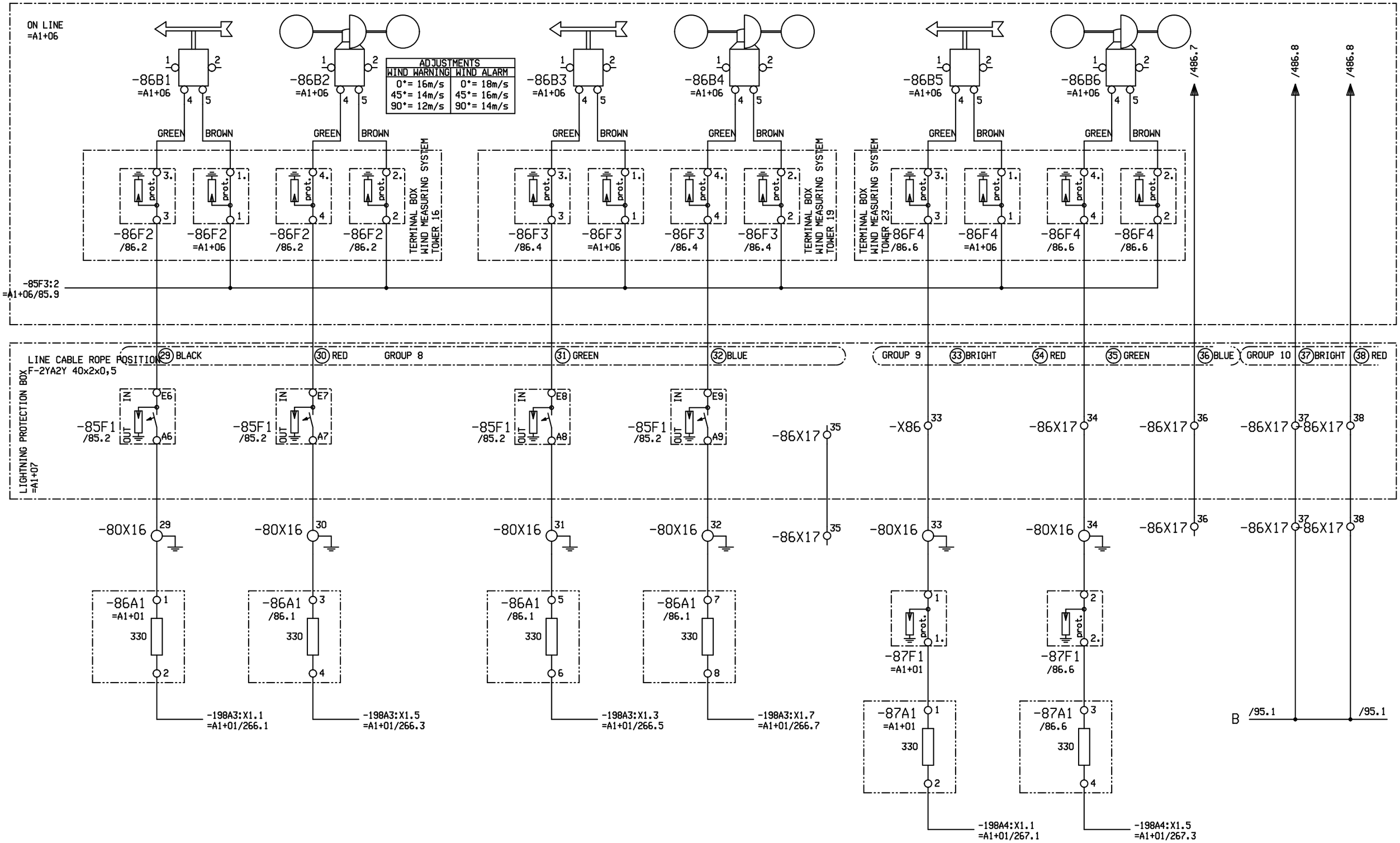

Revision	2.0	Drawn by	SST
Date	19.01.17	Dr.ch.by	FMa
File:	ANWAA4185		

10-MGD BaNa4
WAA0004185
DANANG / VIETNAM

Doppelmayr ®
Innova Patent GmbH
A-6960 WOLFURT / AUSTRIA

WIND WARNING

DRIVE STATION | LV-CONTROL

=A1+01

Date	19.01.17
Sheet :	86
Cont.sheet:	95

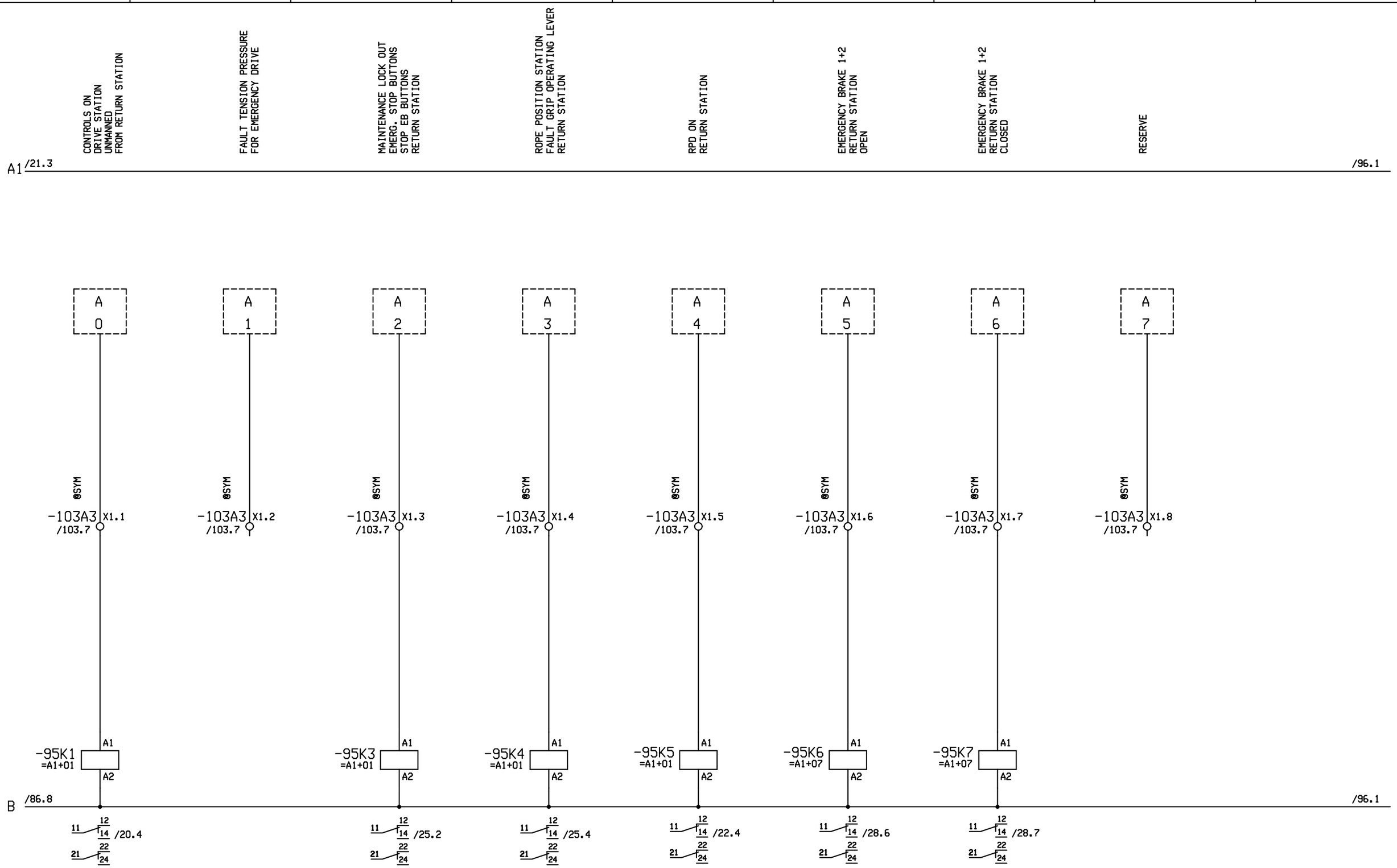

Revision	2.0	Drawn by	SST
Date	19.01.17	Dr.ch.by	FMa
File:	ANWAA4185		

10-MGD BaNa4
WAA0004185
DANANG / VIETNAM

Doppelmayr ®
Innova Patent GmbH
A-6960 WOLFURT / AUSTRIA

CONNECTIONS RETURN STATION FIBER OPTIC CABLE - CONVERTER RECEIVER

DRIVE STATION | LV-CONTROL

=A1+01

Date	19.01.17
Sheet :	95
Cont.sheet:	96

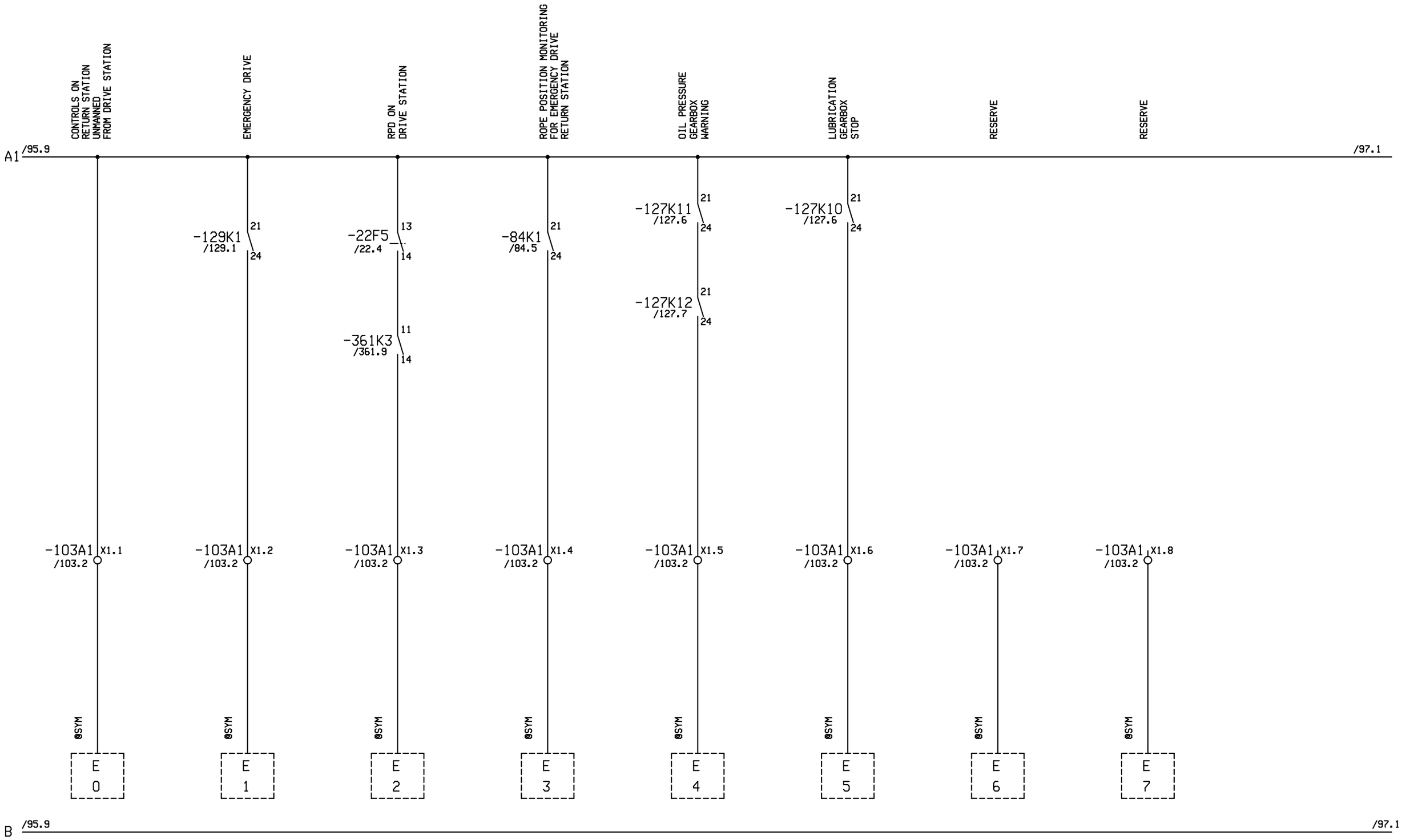

Revision	2.0	Drawn by	SST
Date	19.01.17	Dr.ch.by	FMa

File: ANWAA4185

10-MGD BaNa4
WAA0004185
DANANG / VIETNAM

Doppelmayr ®
Innova Patent GmbH
A-6960 WOLFURT / AUSTRIA

CONNECTIONS RETURN STATION FIBER OPTIC CABLE - CONVERTER TRANSMITTER

DRIVE STATION | LV-CONTROL

=A1+01

Date	08.06.16
Sheet :	96
Cont.sheet:	97

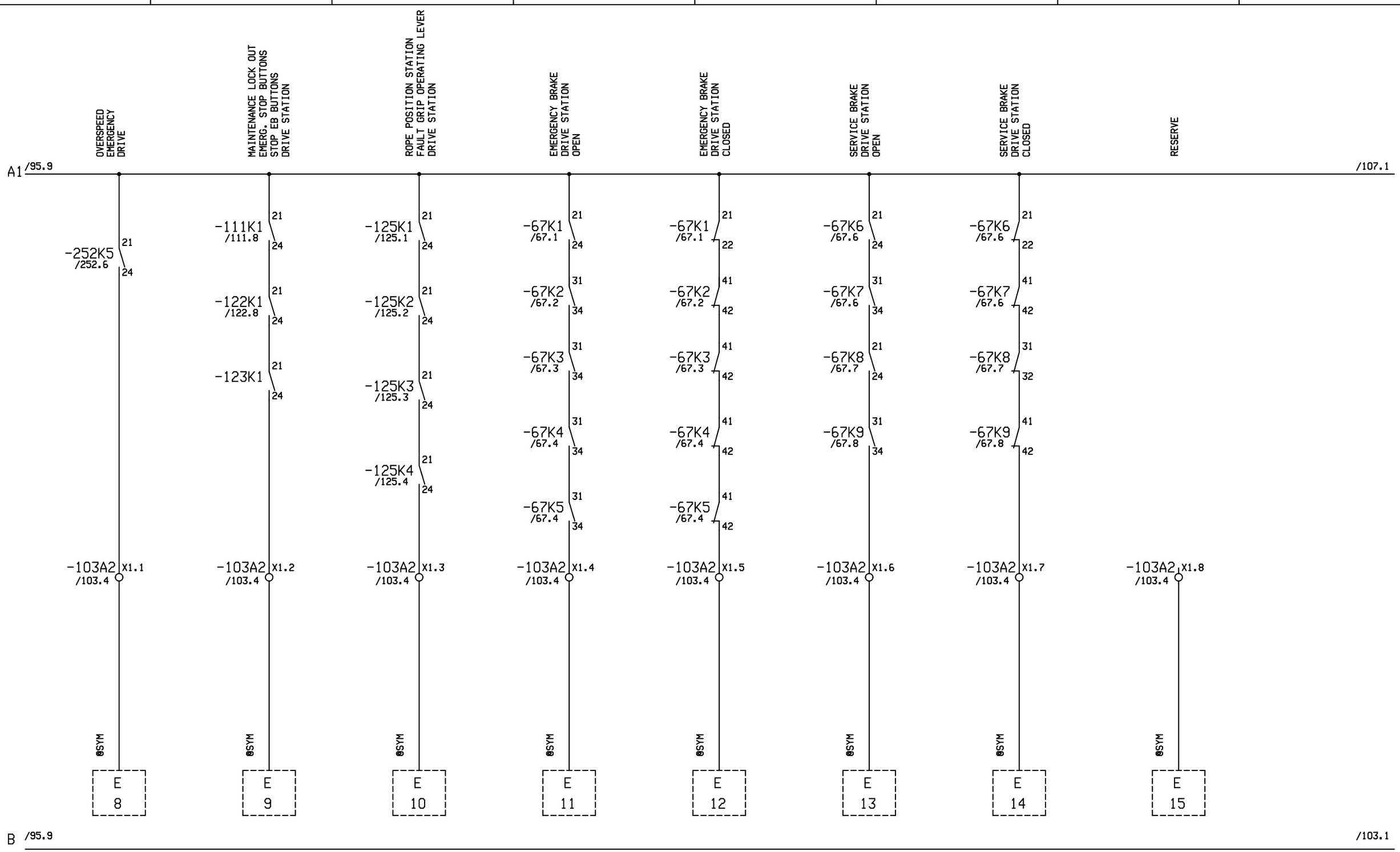

Revision	2.0	Drawn by	SST
Date	19.01.17	Dr.ch.by	FMa
File:	ANWAA4185		

10-MGD BaNa4
WAA0004185
DANANG / VIETNAM

Doppelmayr ®
Innova Patent GmbH
A-6960 WOLFURT / AUSTRIA

CONNECTIONS RETURN STATION FIBER OPTIC CABLE - CONVERTER TRANSMITTER

DRIVE STATION | LV-CONTROL

=A1+01

Date	04.10.16
Sheet :	97
Cont.sheet:	103

FIBER OPTIC CABLE - CONVERTER TRANSMITTER

FIBER OPTIC CABLE - CONVERTER TRANSMITTER ENLARGEMENT UNIT

FIBER OPTIC CABLE - CONVERTER RECEIVER

A10 /20.8 PXR>

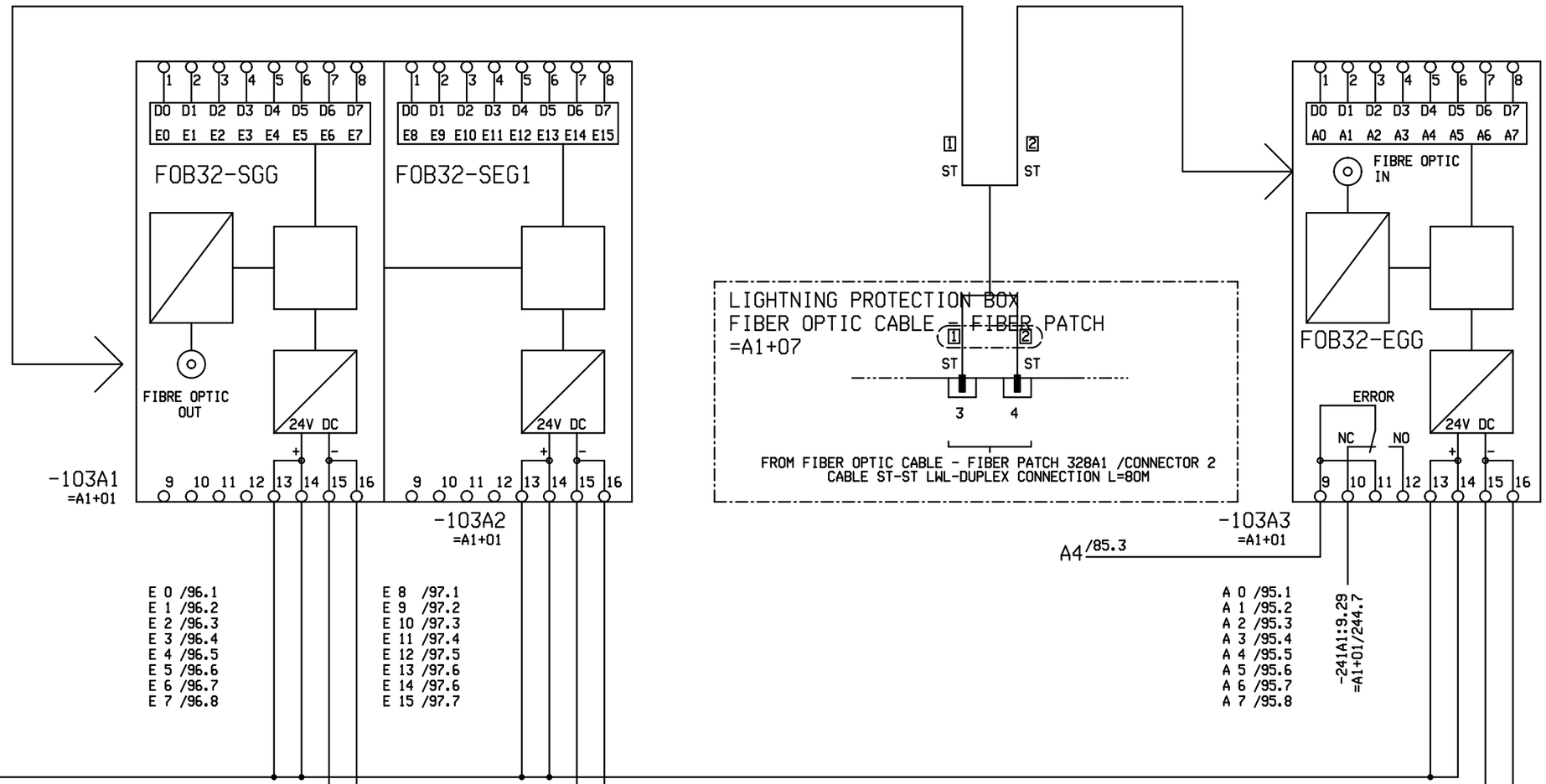

B /97.8 /104.1

ACHTUNG! EMPFANGSEINHEIT UND SENDEEINHEIT DÜRFEN NICHT
ZUSAMMENGESTECKT WERDEN --> KLEMME ZWISCHEN DIE ZWEI EINHEITEN MONTIEREN!

Revision	2.0	Drawn by	SST
Date	19.01.17	Dr.ch.by	FMa
File:	ANWAA4185		

10-MGD BaNa4
WAA0004185
DANANG / VIETNAM

Doppelmayr ®
Innova Patent GmbH
A-6960 WOLFURT / AUSTRIA

FIBER OPTIC CABLE - CONVERTER TRANSMITTER RECEIVER

DRIVE STATION | LV-CONTROL

=A1+01

Date	19.01.17
Sheet :	103
Cont.sheet:	104

SAFETY BUS
FIBER OPTIC CABLE - CONVERTER
MASTER

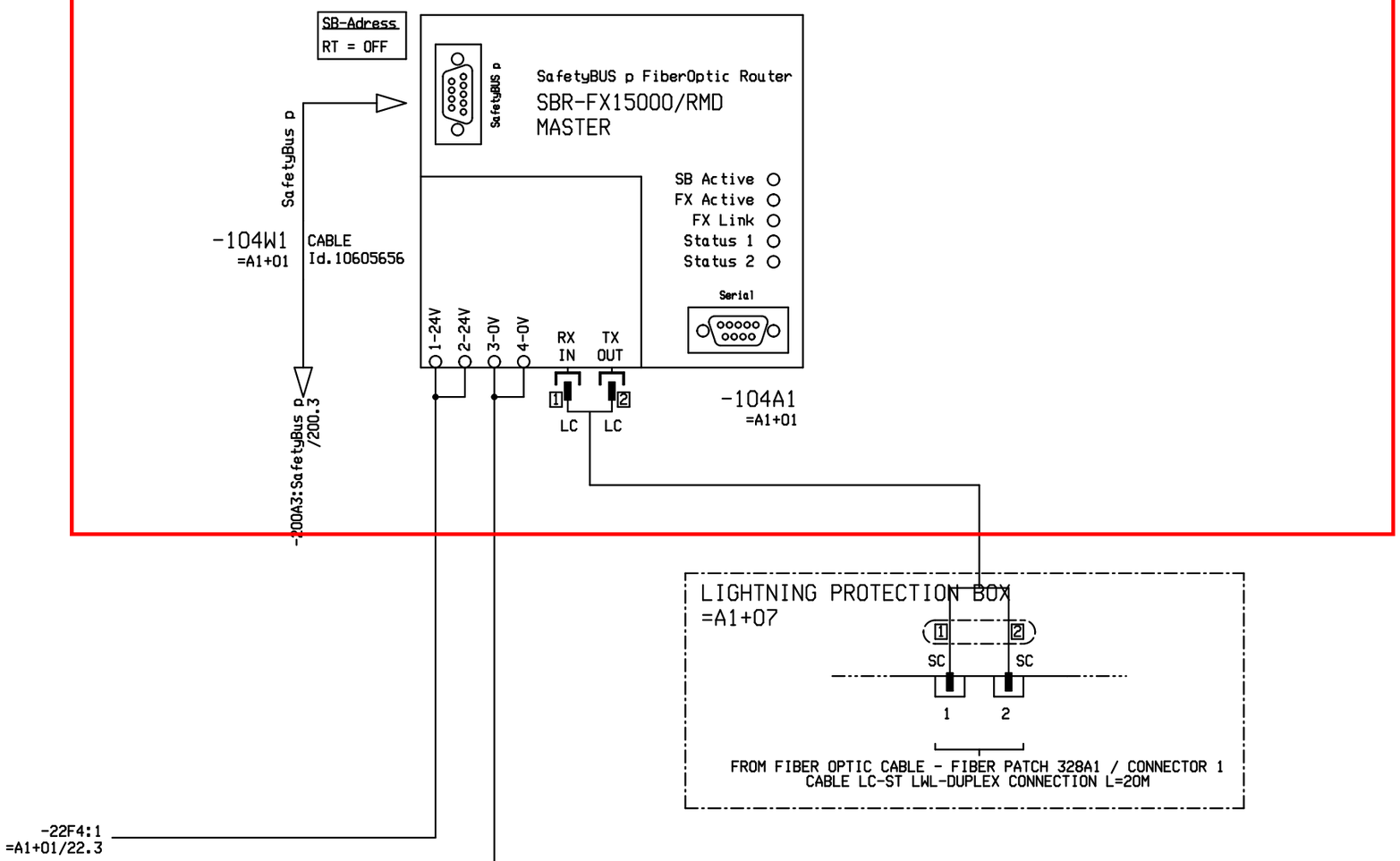

B /103.9 /105.1

Revision	2.0	Drawn by	SST
Date	19.01.17	Dr.ch.by	FMa
File:	ANWAA4185		

10-MGD BaNa4
WAA0004185
DANANG / VIETNAM

Doppelmayr ®
Innova Patent GmbH
A-6960 WOLFURT / AUSTRIA

FIBER OPTIC CABLE - CONVERTER

DRIVE STATION | LV-CONTROL

=A1+01

Date	06.06.16
Sheet :	104
Cont.sheet:	105

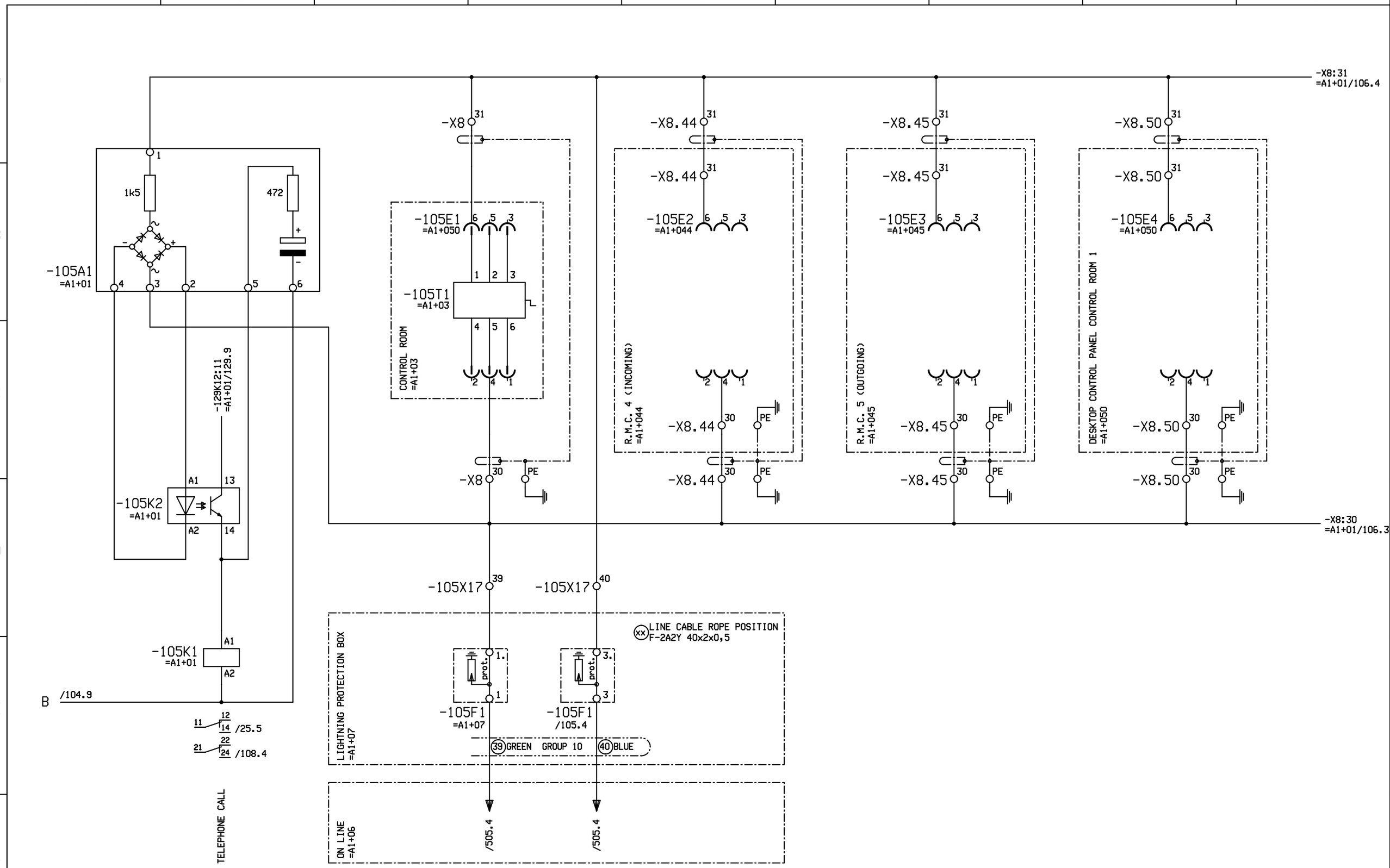

Revision	2.0	Drawn by	SST
Date	19.01.17	Dr.ch.by	FMa
File:	ANWAA4185		

10-MGD BaNa4
WAA0004185
DANANG / VIETNAM

Doppelmayr ®
Innova Patent GmbH
A-6960 WOLFURT / AUSTRIA

TELEPHONE

DRIVE STATION | LV-CONTROL

=A1+01

Date	19.01.17
Sheet :	105
Cont.sheet:	106

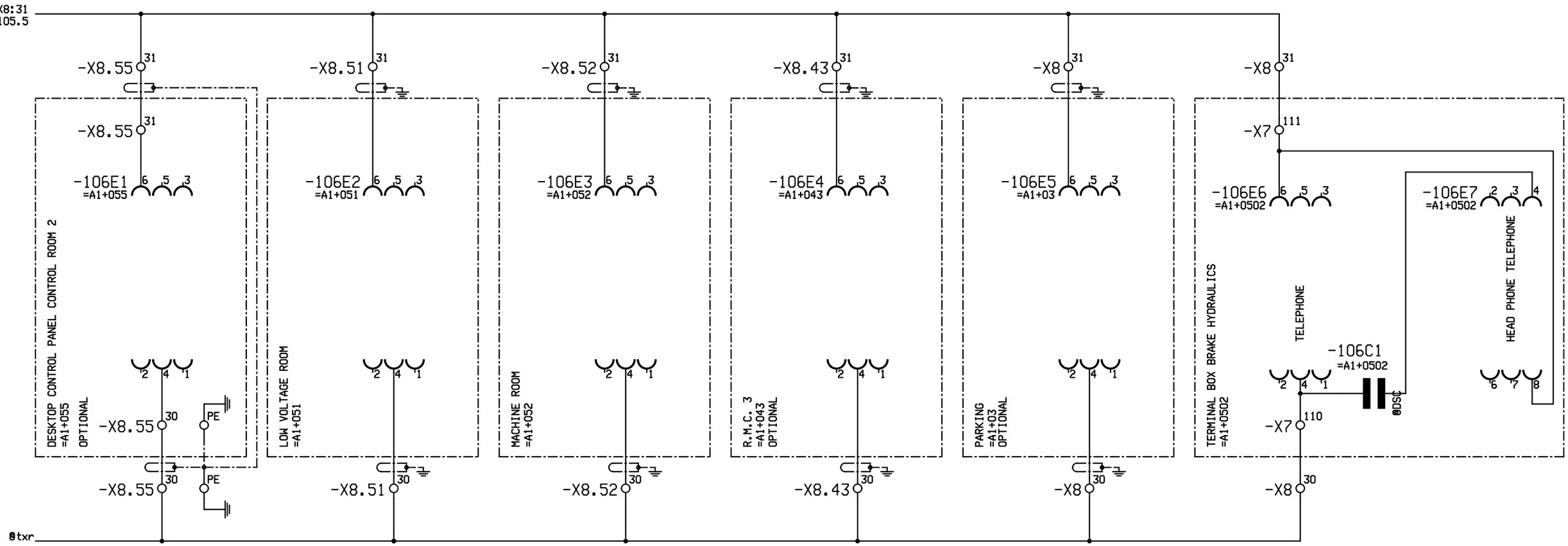

Revision	2.0	Drawn by	SST	10-MGD BaNa4	Doppelmayr ®	TELEPHONE	=A1+01
Date	19.01.17	Dr.ch.by	FMa	WAA0004185	Innova Patent GmbH		Date 21.04.16
File:	ANWAA4185			DANANG / VIETNAM	A-6960 WOLFURT / AUSTRIA	DRIVE STATION / LV-CONTROL	Sheet : 106
							Cont.sheet: 107

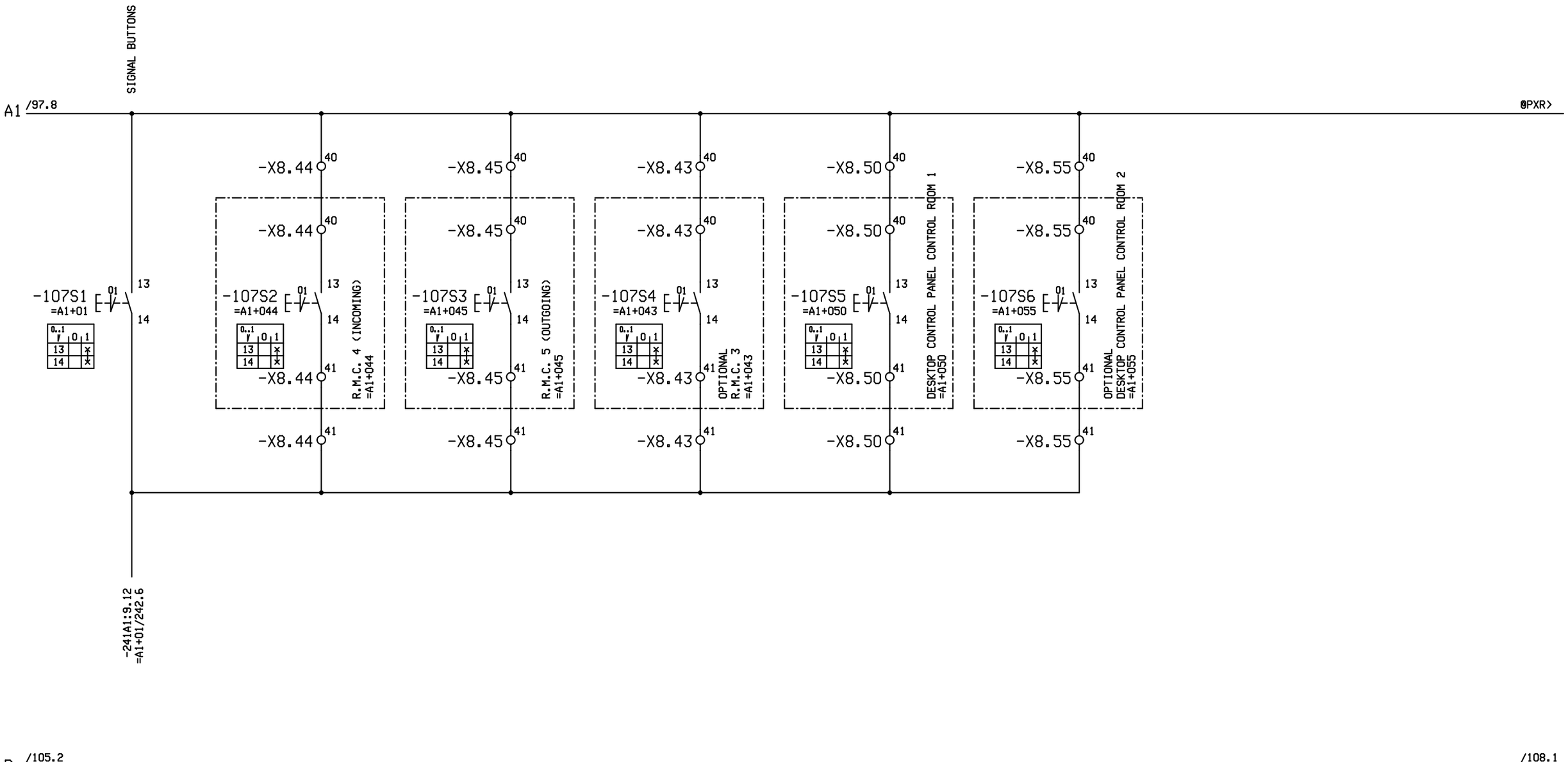

Revision	2.0	Drawn by	SST
Date	19.01.17	Dr.ch.by	FMa
File:	ANWAA4185		

10-MGD BaNa4
WAA0004185
DANANG / VIETNAM

Doppelmayr ®
Innova Patent GmbH
A-6960 WOLFURT / AUSTRIA

SIGNAL BUTTONS

DRIVE STATION | LV-CONTROL

=A1+01

Date	07.06.16
Sheet :	107
Cont.sheet:	108

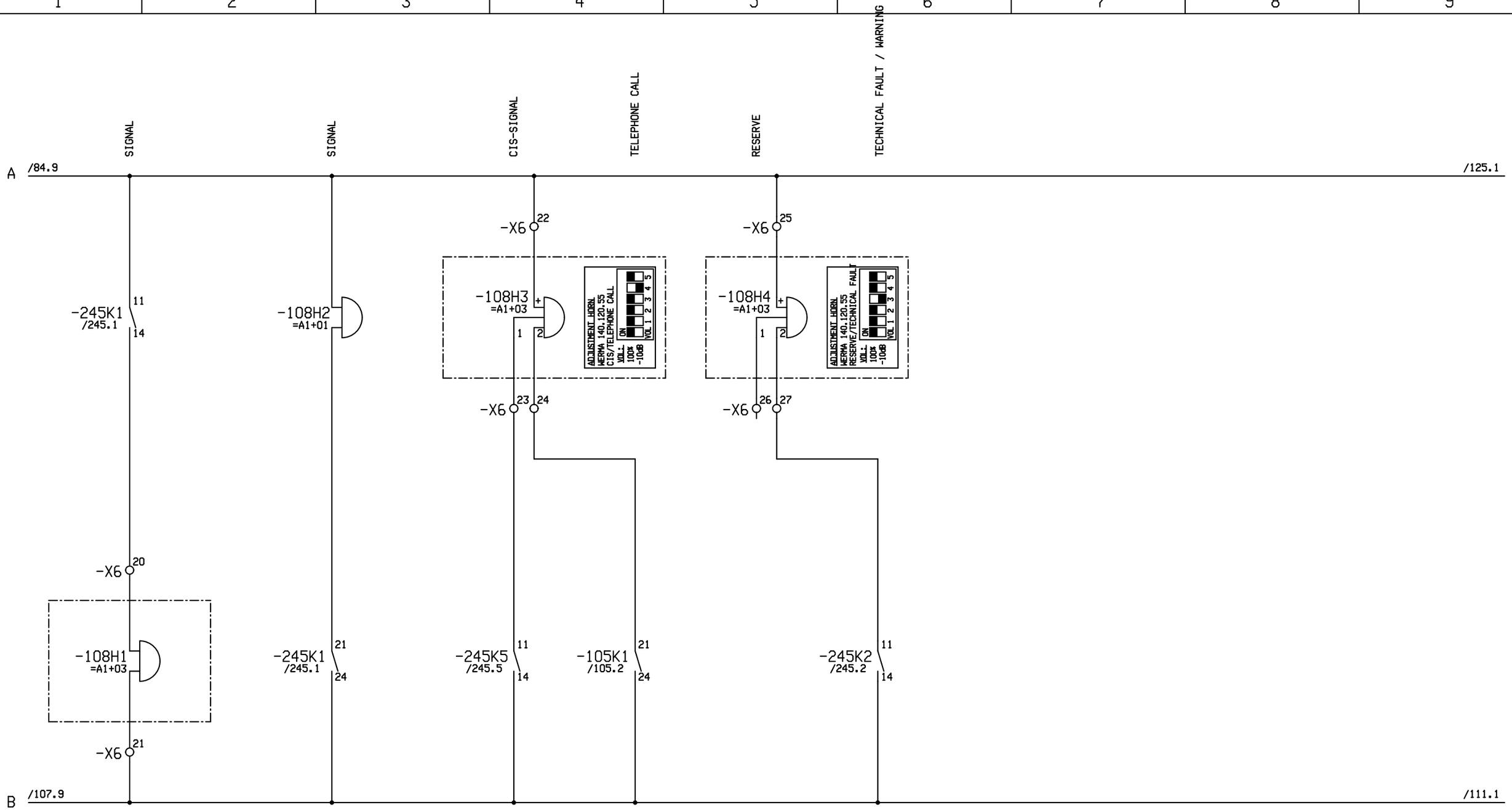

Revision	2.0	Drawn by	SST
Date	19.01.17	Dr.ch.by	FMa
File:	ANWAA4185		

10-MGD BaNa4
WAA0004185
DANANG / VIETNAM

Doppelmayr ®
Innova Patent GmbH
A-6960 WOLFURT / AUSTRIA

SIGNAL

DRIVE STATION | LV-CONTROL

=A1+01

Date	01.04.16
Sheet :	108
Cont.sheet:	111

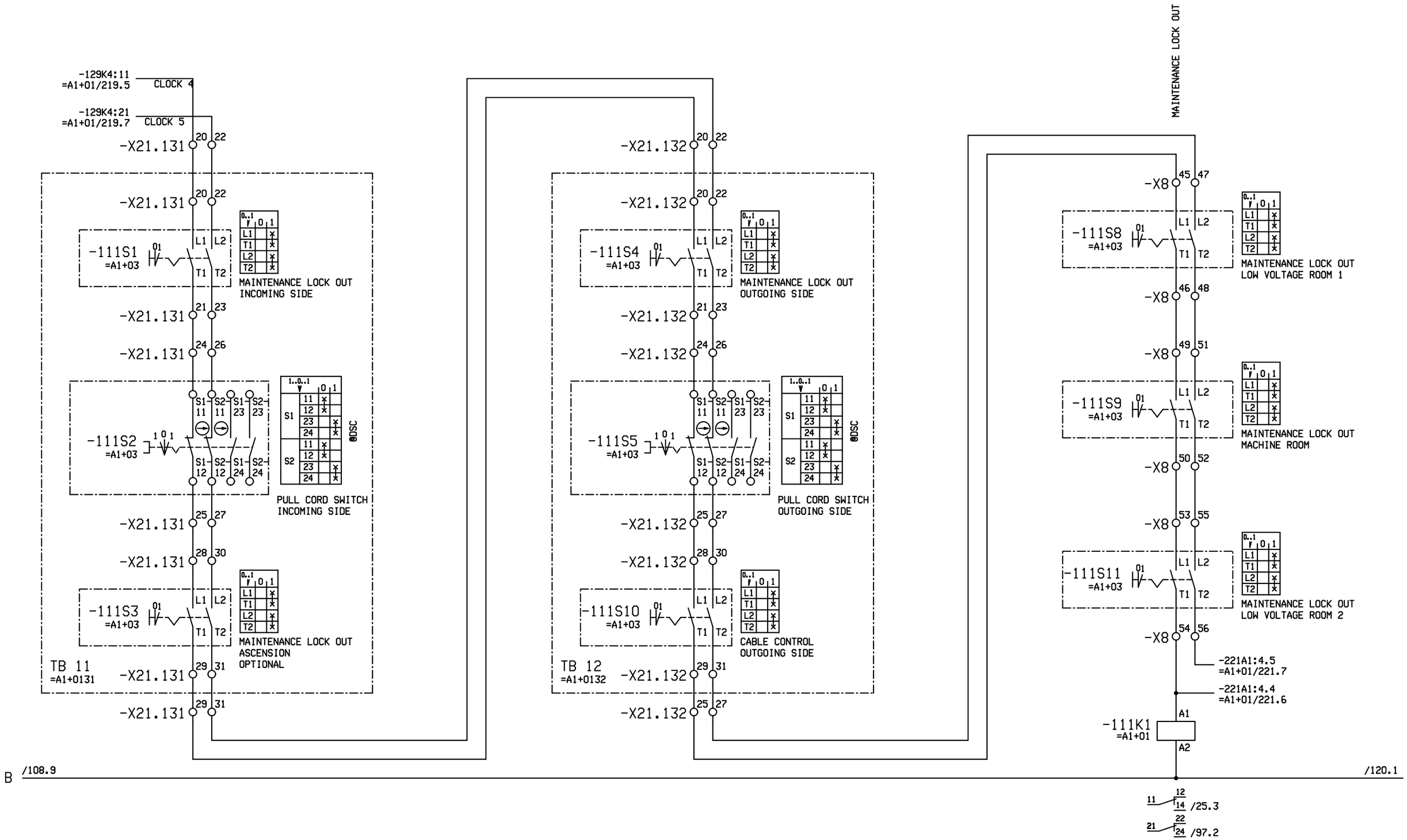

Revision	2.0	Drawn by	SST
Date	19.01.17	Dr.ch.by	FMa

File: ANWAA4185

10-MGD BaNa4
WAA0004185
DANANG / VIETNAM

Doppelmayr ®
Innova Patent GmbH
A-6960 WOLFURT / AUSTRIA

MAINTENANCE LOCK OUT

DRIVE STATION | LV-CONTROL

=A1+01

Date	10.05.17
Sheet :	111
Cont.sheet:	120

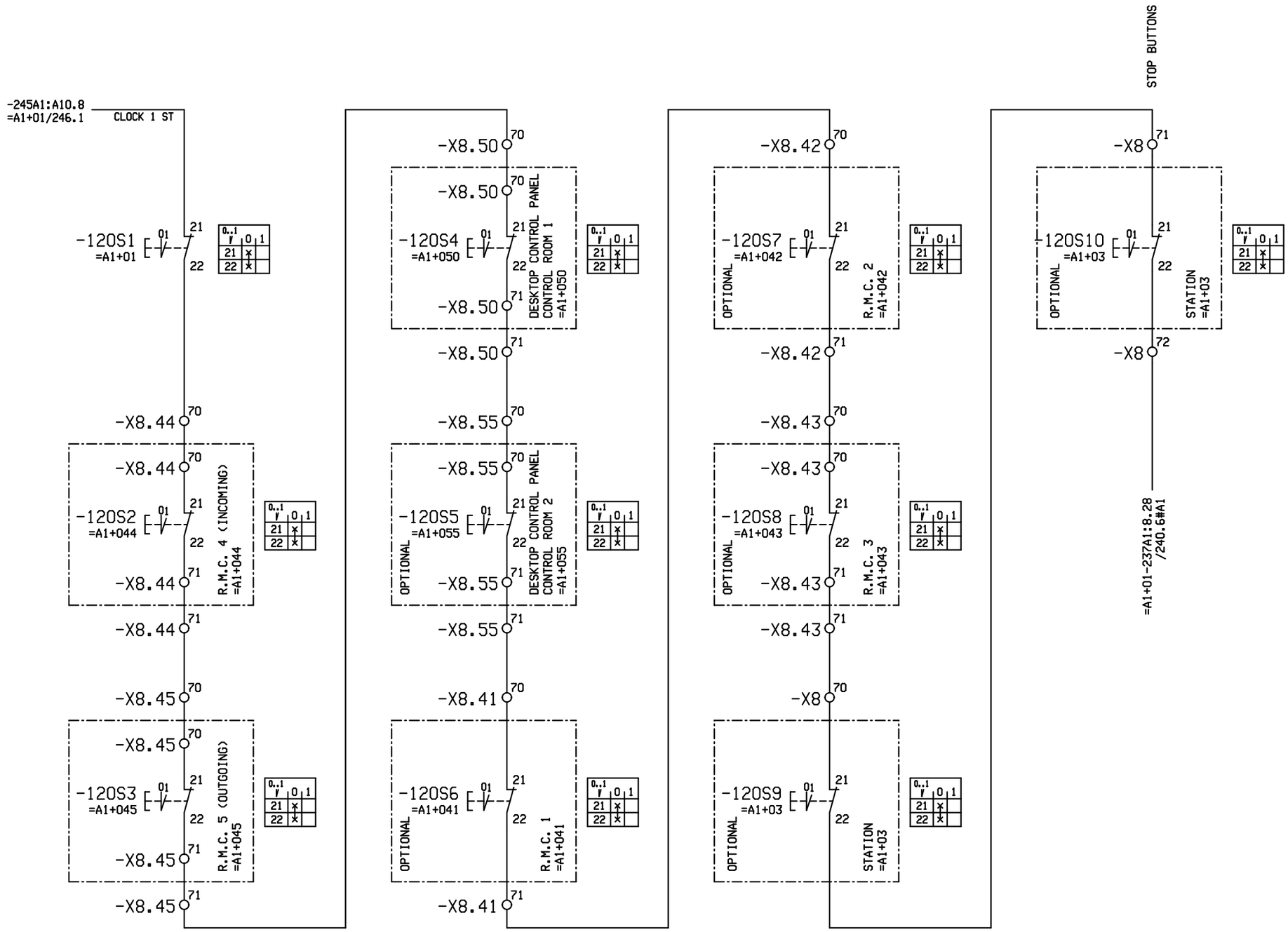

Revision	2.0	Drawn by	SST
Date	19.01.17	Dr.ch.by	FMa
File:	ANWAA4185		

10-MGD BaNa4
WAA0004185
DANANG / VIETNAM

Doppelmayr ®
Innova Patent GmbH
A-6960 WOLFURT / AUSTRIA

STOP BUTTONS

DRIVE STATION | LV-CONTROL

=A1+01

Date	20.04.16
Sheet :	120
Cont.sheet:	122

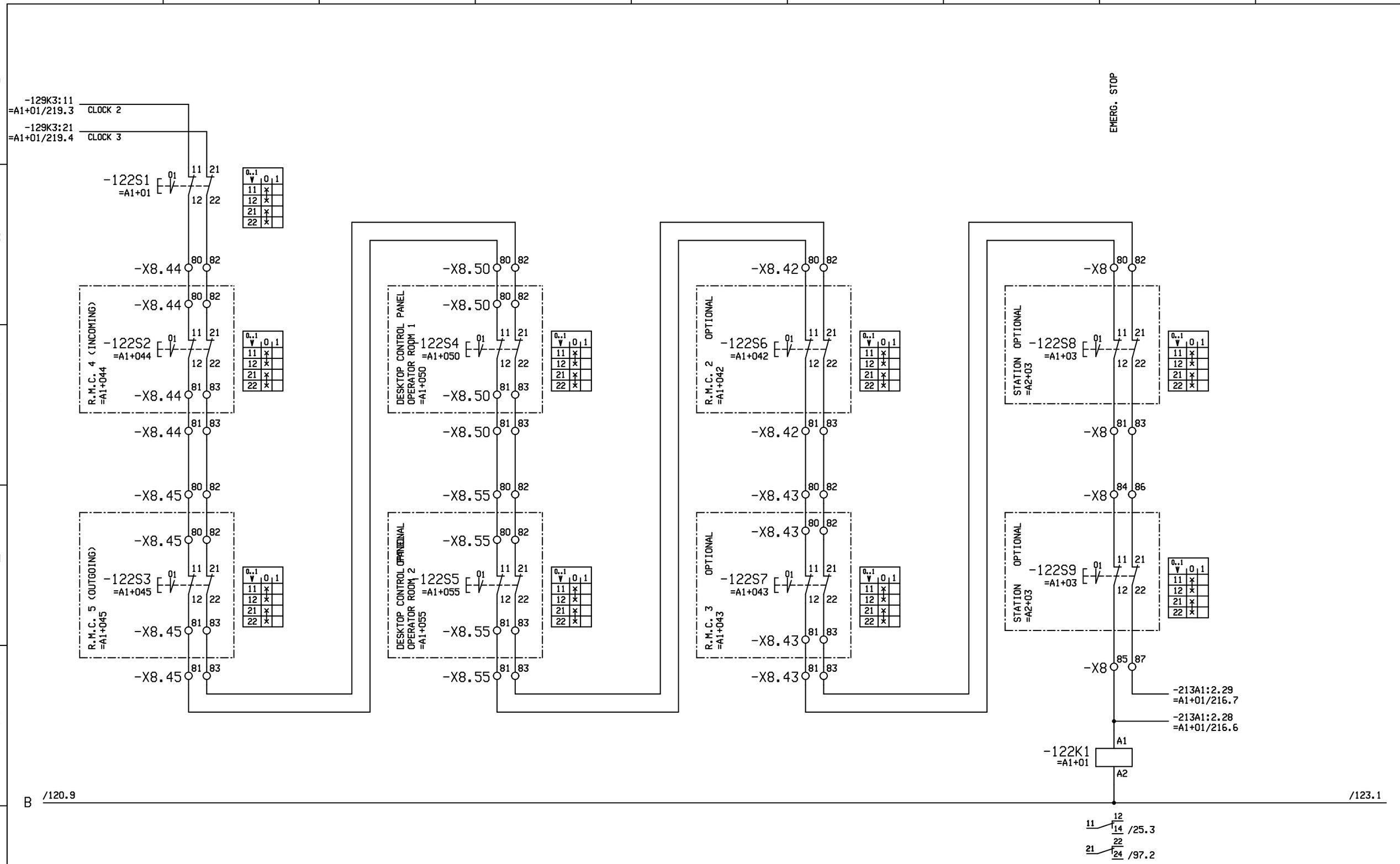

Revision	2.0	Drawn by	SST
Date	19.01.17	Dr.ch.by	FMa

File: ANWAA4185

10-MGD BaNa4
WAA0004185
DANANG / VIETNAM

Doppelmayr ®
Innova Patent GmbH
A-6960 WOLFURT / AUSTRIA

EMERG. STOP BUTTONS

DRIVE STATION | LV-CONTROL

=A1+01

Date	19.01.17
Sheet :	122
Cont.sheet:	123

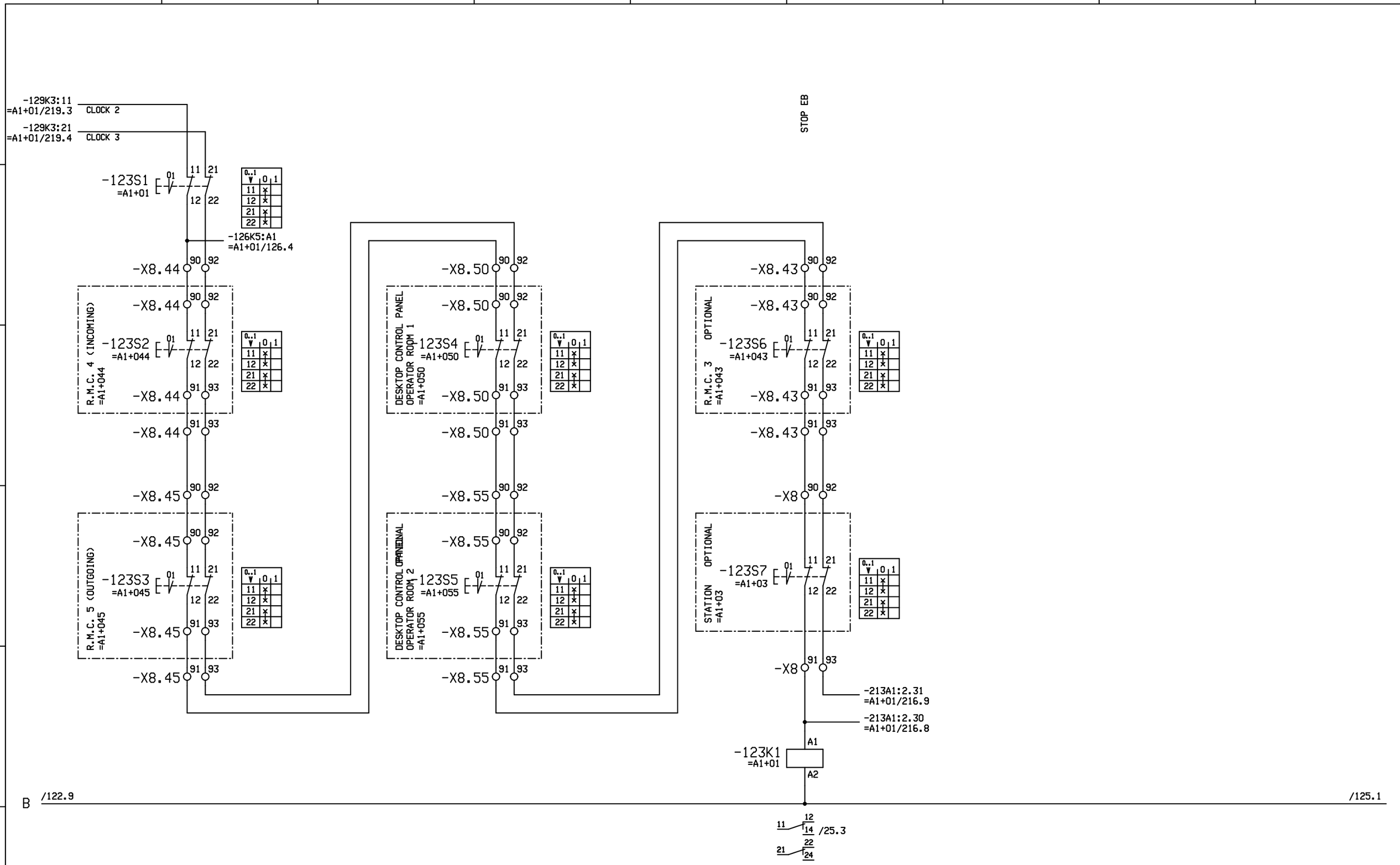

Revision	2.0	Drawn by	SST
Date	19.01.17	Dr.ch.by	FMa
File:	ANWAA4185		

10-MGD BaNa4
WAA0004185
DANANG / VIETNAM

Doppelmayr ®
Innova Patent GmbH
A-6960 WOLFURT / AUSTRIA

STOP EB BUTTONS

DRIVE STATION | LV-CONTROL

=A1+01

Date	22.03.17
Sheet :	123
Cont.sheet:	125

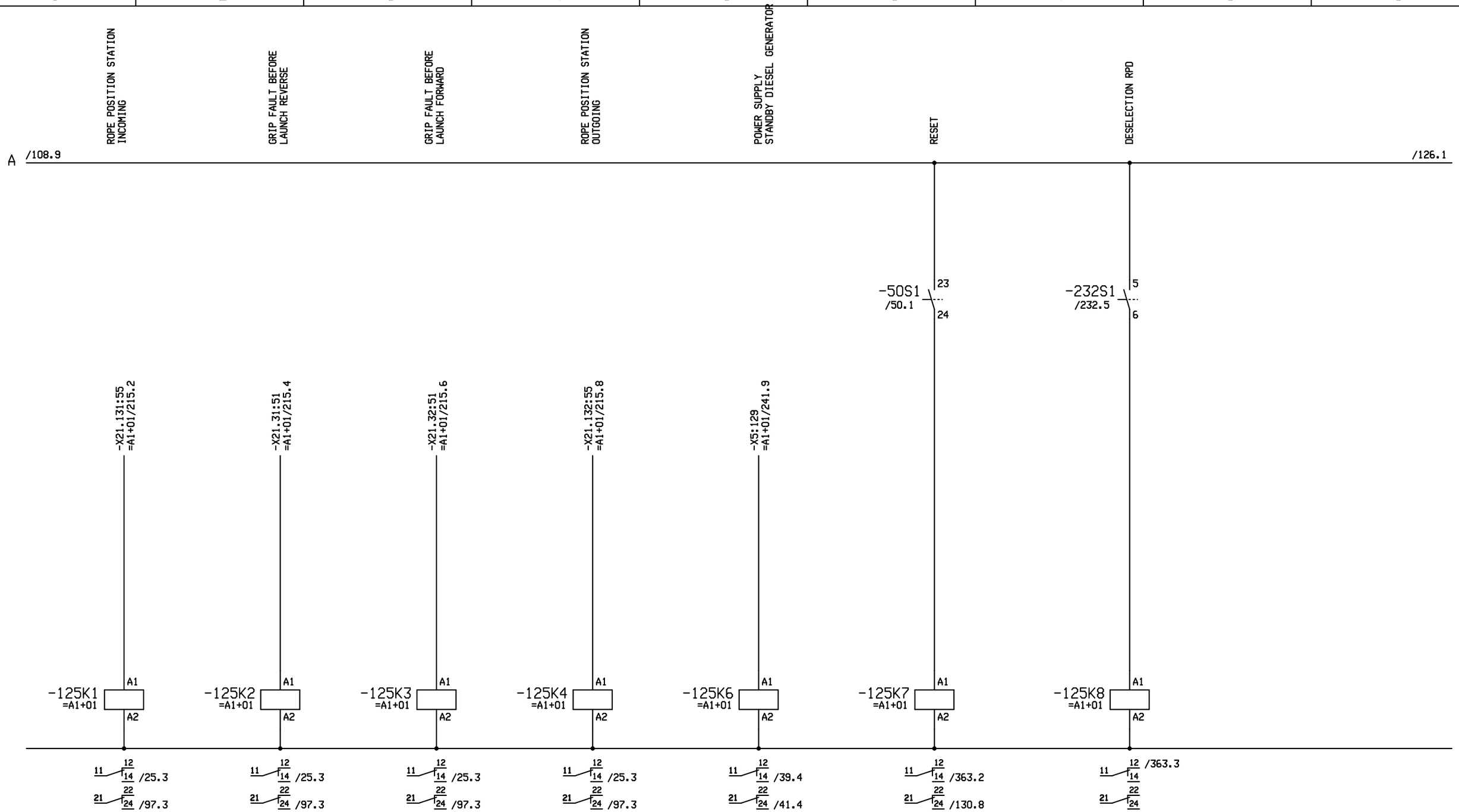

Revision	2.0	Drawn by	SST
Date	19.01.17	Dr.ch.by	FMa
File:	ANWAA4185		

10-MGD BaNa4
WAA0004185
DANANG / VIETNAM

Doppelmayr ®
Innova Patent GmbH
A-6960 WOLFURT / AUSTRIA

RELAY

DRIVE STATION | LV-CONTROL

=A1+01

Date	19.01.17
Sheet :	125
Cont.sheet:	126

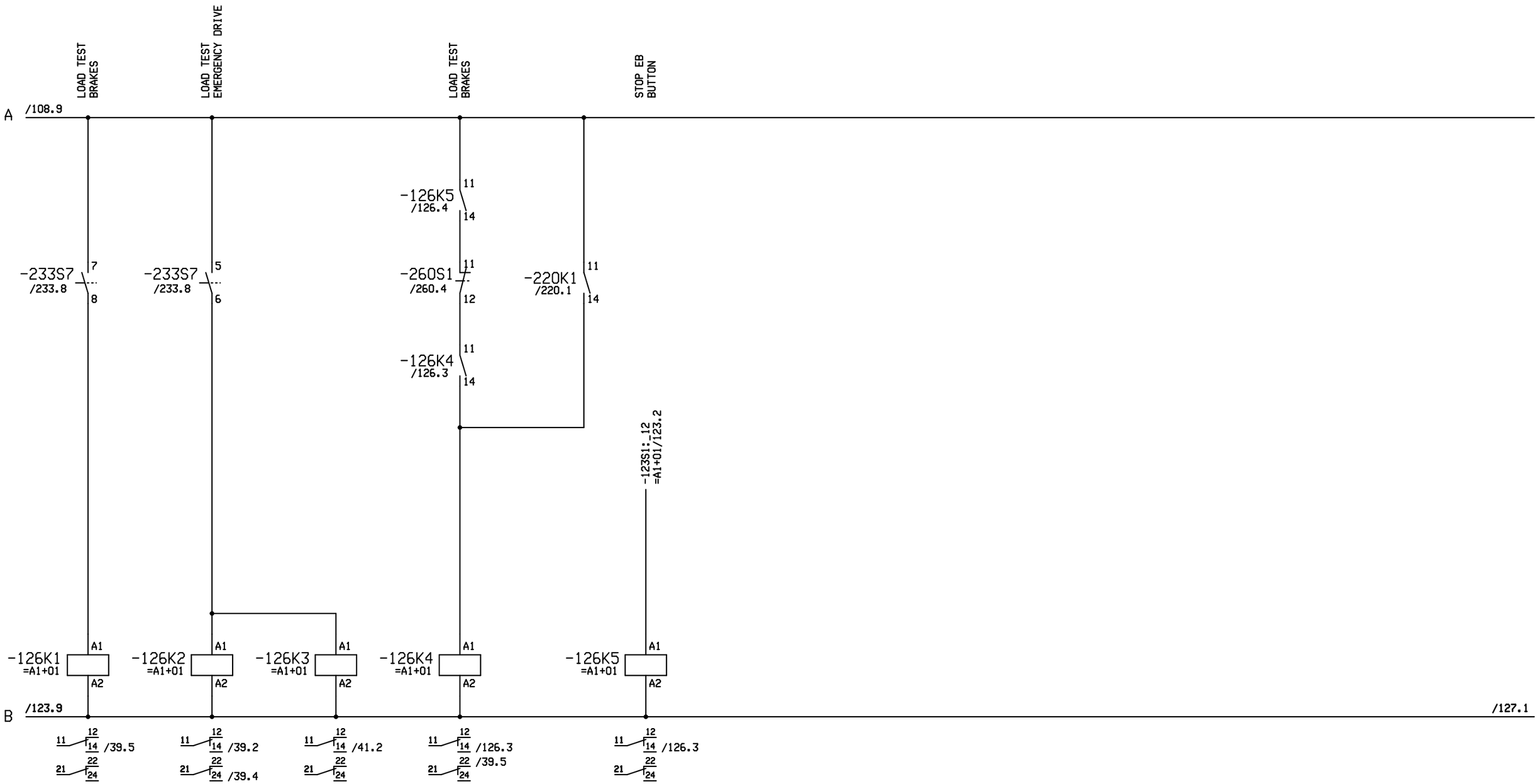

Revision	2.0	Drawn by	SST
Date	19.01.17	Dr.ch.by	FMa
File:	ANWAA4185		

10-MGD BaNa4
WAA0004185
DANANG / VIETNAM

Doppelmayr ®
Innova Patent GmbH
A-6960 WOLFURT / AUSTRIA

RELAY

DRIVE STATION | LV-CONTROL

=A1+01

Date	26.07.16
Sheet :	126
Cont.sheet:	127

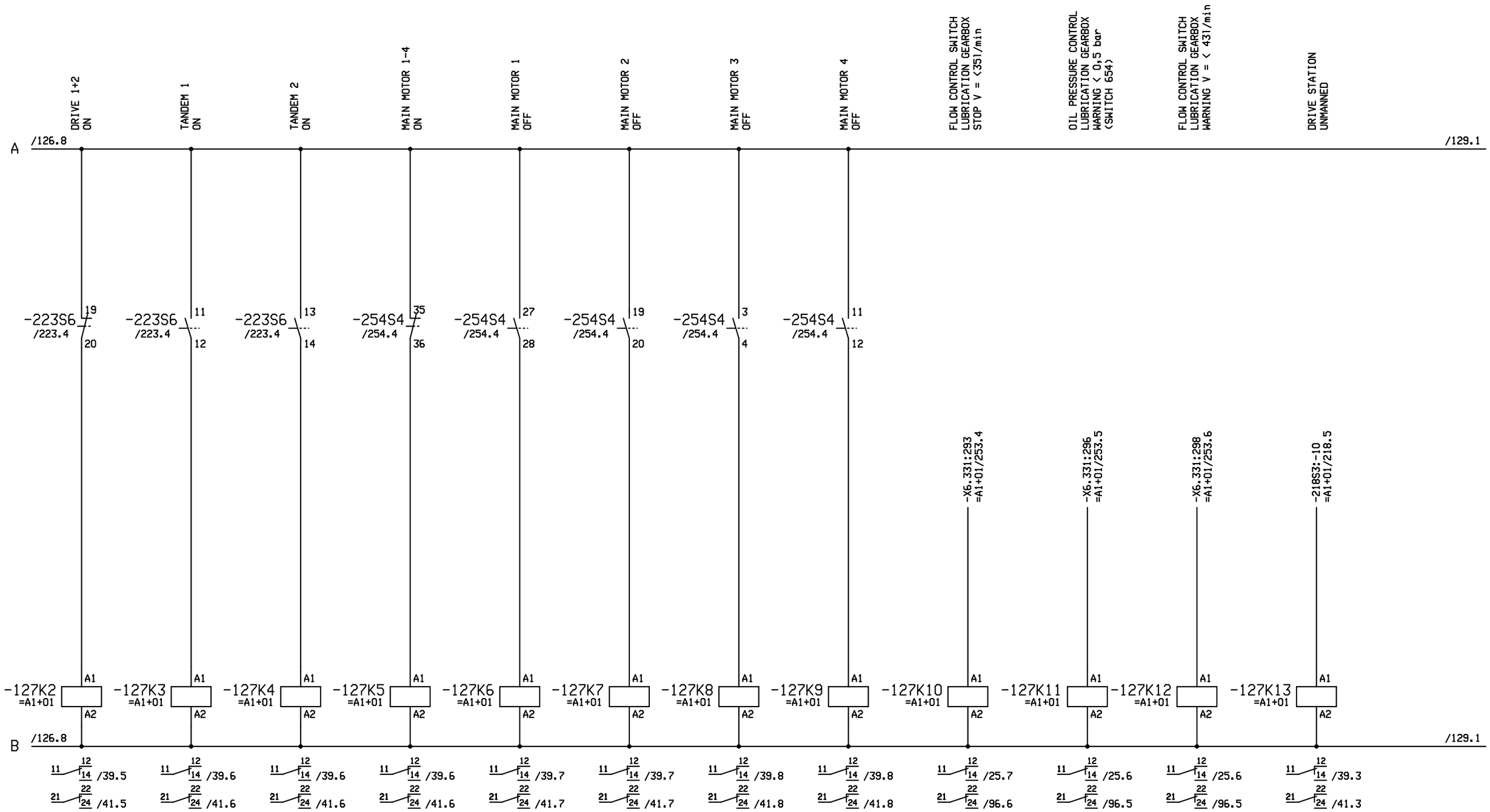

Revision	2.0	Drawn by	SST
Date	19.01.17	Dr.ch.by	FMa
File:	ANWAA4185		

10-MGD BaNa4
WAA0004185
DANANG / VIETNAM

Doppelmayr ®
Innova Patent GmbH
A-6960 WOLFURT / AUSTRIA

RELAY

DRIVE STATION | LV-CONTROL

=A1+01

Date	19.01.17
Sheet :	127
Cont.sheet:	129

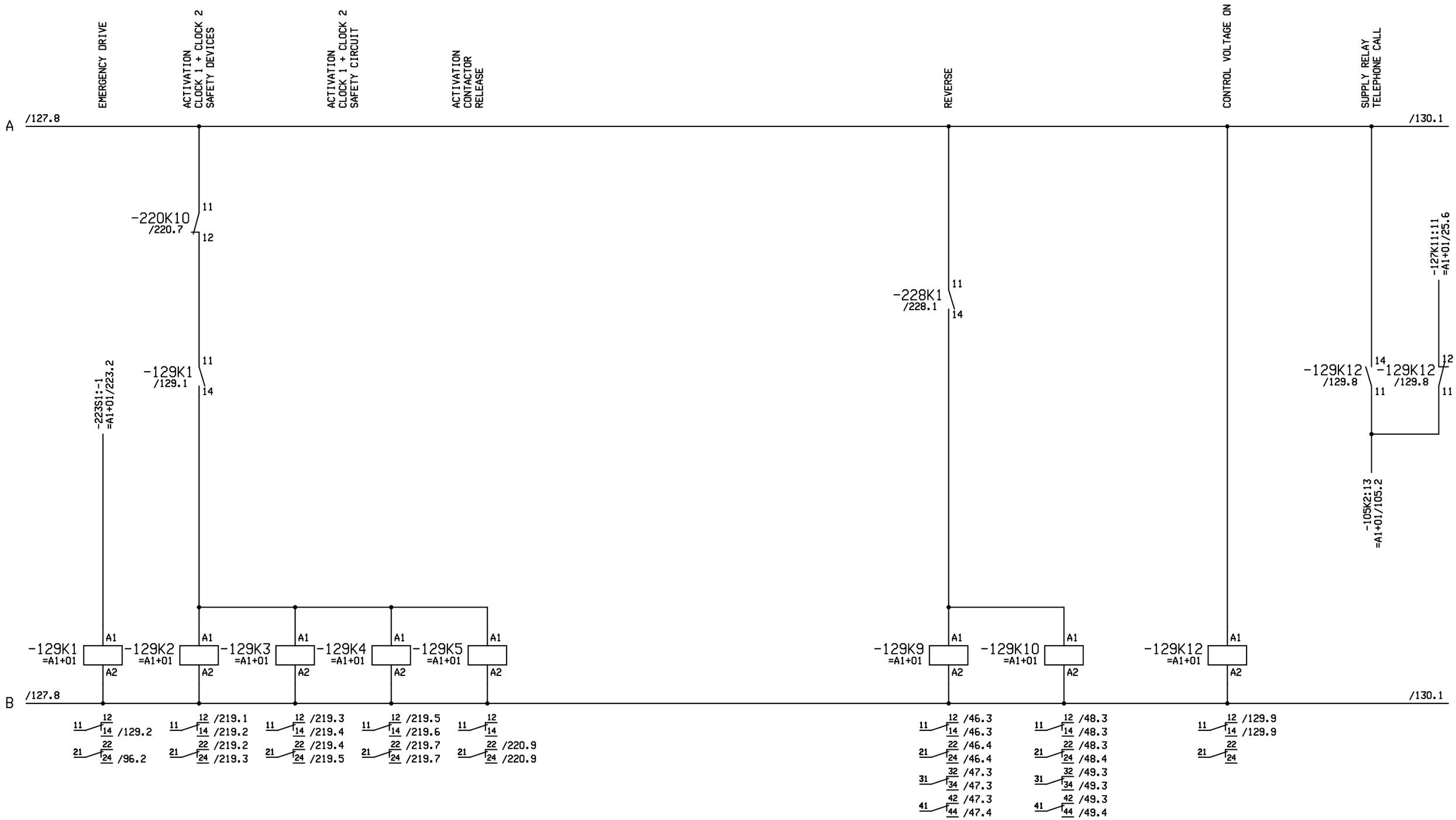

Revision	2.0	Drawn by	SST
Date	19.01.17	Dr.ch.by	FMa

File: ANWAA4185

10-MGD BaNa4
WAA0004185
DANANG / VIETNAM

Doppelmayr ®
Innova Patent GmbH
A-6960 WOLFURT / AUSTRIA

RELAY

DRIVE STATION | LV-CONTROL

=A1+01

Date	20.01.17
Sheet :	129
Cont.sheet:	130

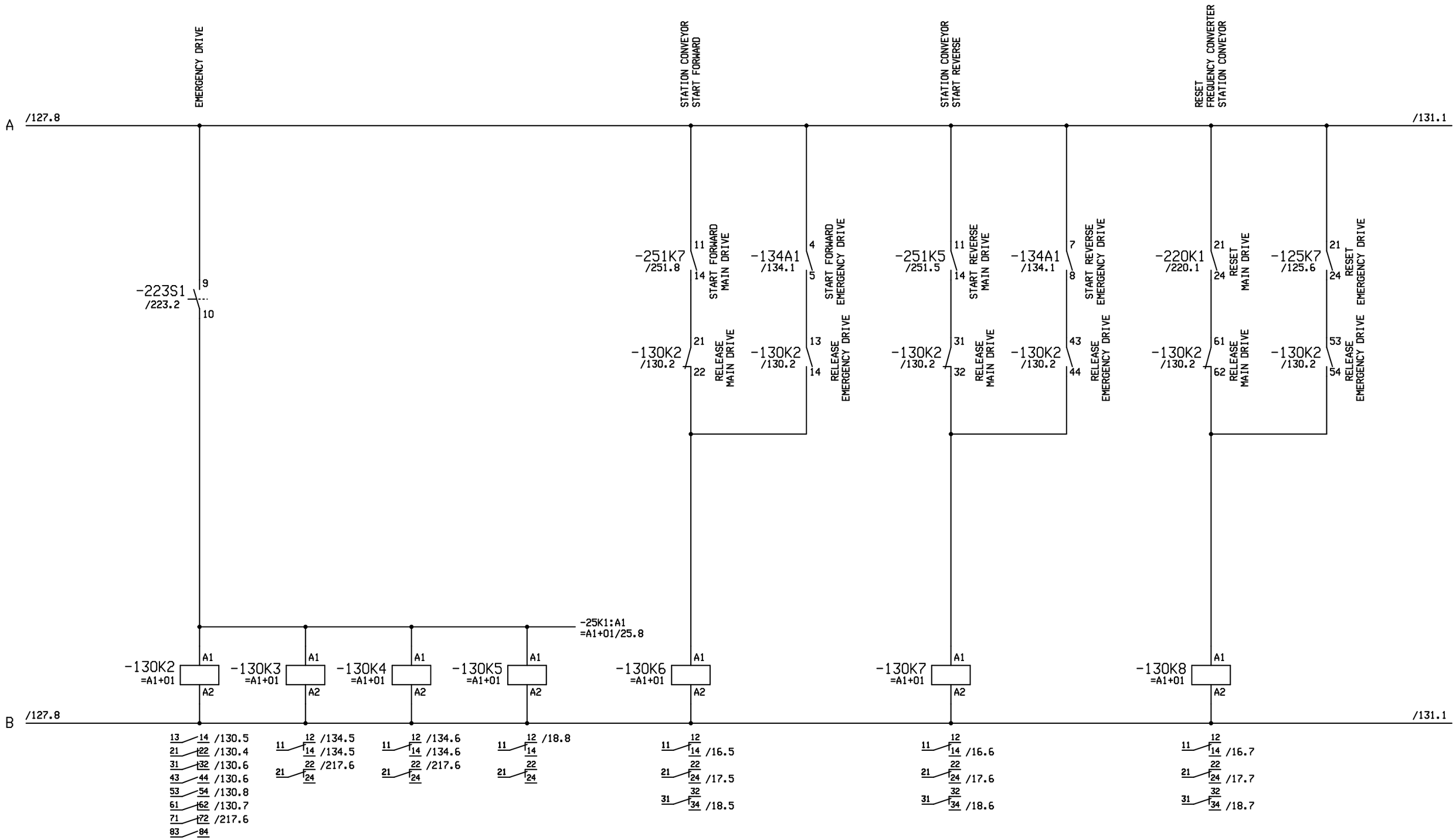

Revision	2.0	Drawn by	SST
Date	19.01.17	Dr.ch.by	FMa
File:	ANWAA4185		

10-MGD BaNa4
WAA0004185
DANANG / VIETNAM

Doppelmayr ®
Innova Patent GmbH
A-6960 WOLFURT / AUSTRIA

STATION CONVEYOR

DRIVE STATION | LV-CONTROL

=A1+01

Date	22.03.17
Sheet :	130
Cont.sheet:	131

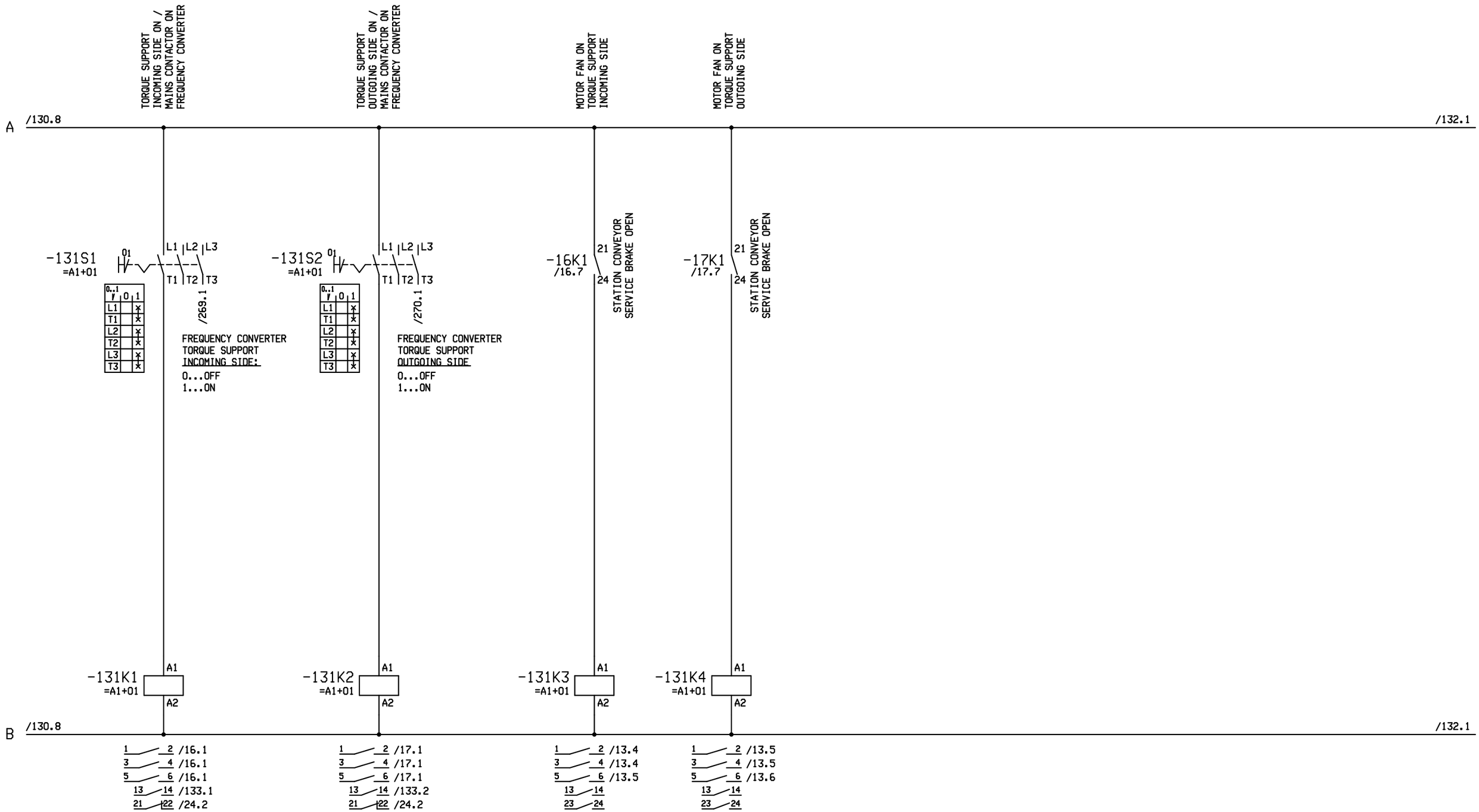

Revision	2.0	Drawn by	SST
Date	19.01.17	Dr.ch.by	FMa
File:	ANWAA4185		

10-MGD BaNa4
WAA0004185
DANANG / VIETNAM

Doppelmayr ®
Innova Patent GmbH
A-6960 WOLFURT / AUSTRIA

STATION CONVEYOR

DRIVE STATION | LV-CONTROL

=A1+01

Date	14.06.16
Sheet :	131
Cont.sheet:	132

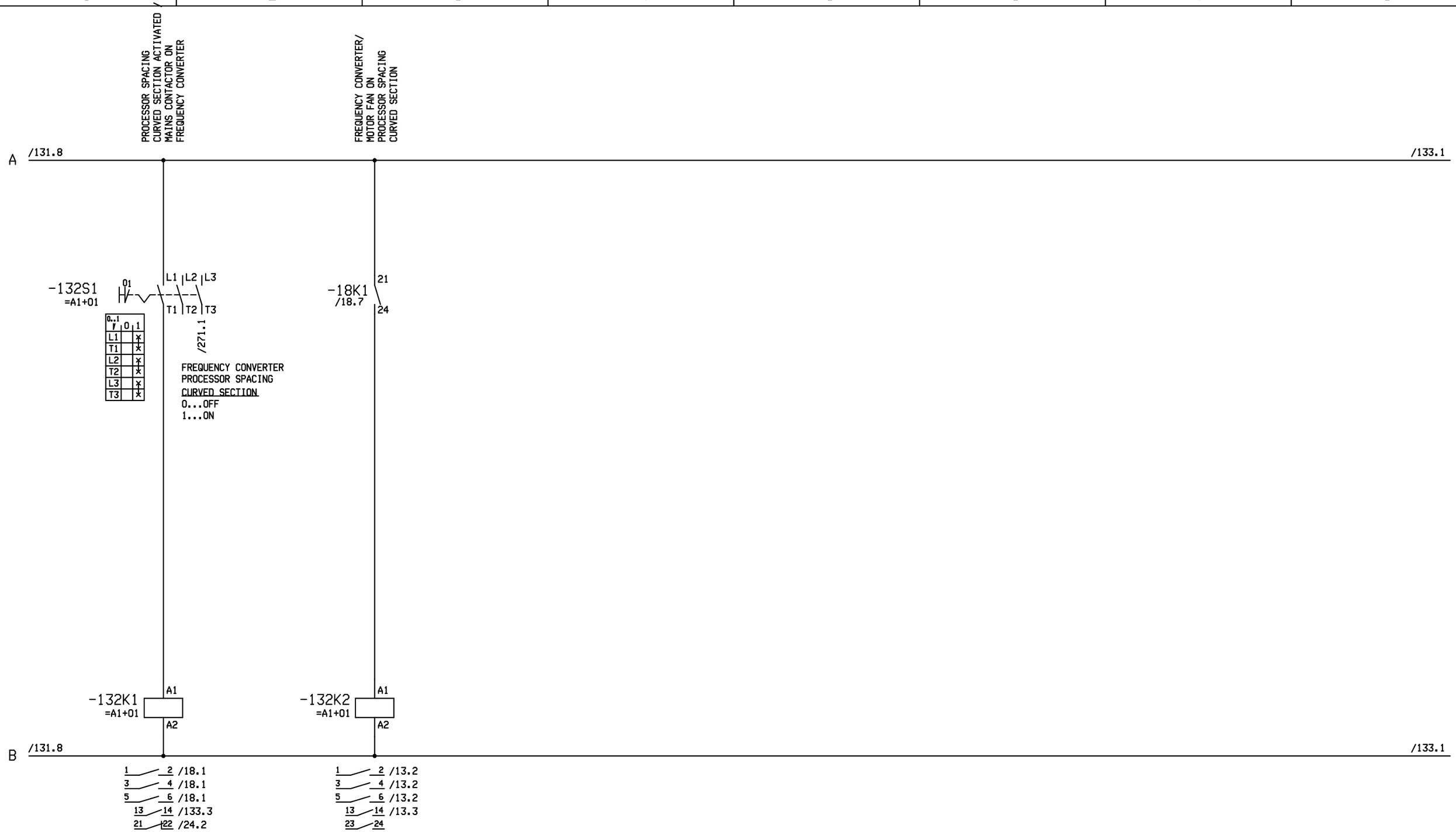

Revision	2.0	Drawn by	SST
Date	19.01.17	Dr.ch.by	FMa
File:	ANWAA4185		

10-MGD BaNa4
WAA0004185
DANANG / VIETNAM

Doppelmayr ®
Innova Patent GmbH
A-6960 WOLFURT / AUSTRIA

STATION CONVEYOR

DRIVE STATION | LV-CONTROL

=A1+01

Date	14.06.16
Sheet :	132
Cont.sheet:	133

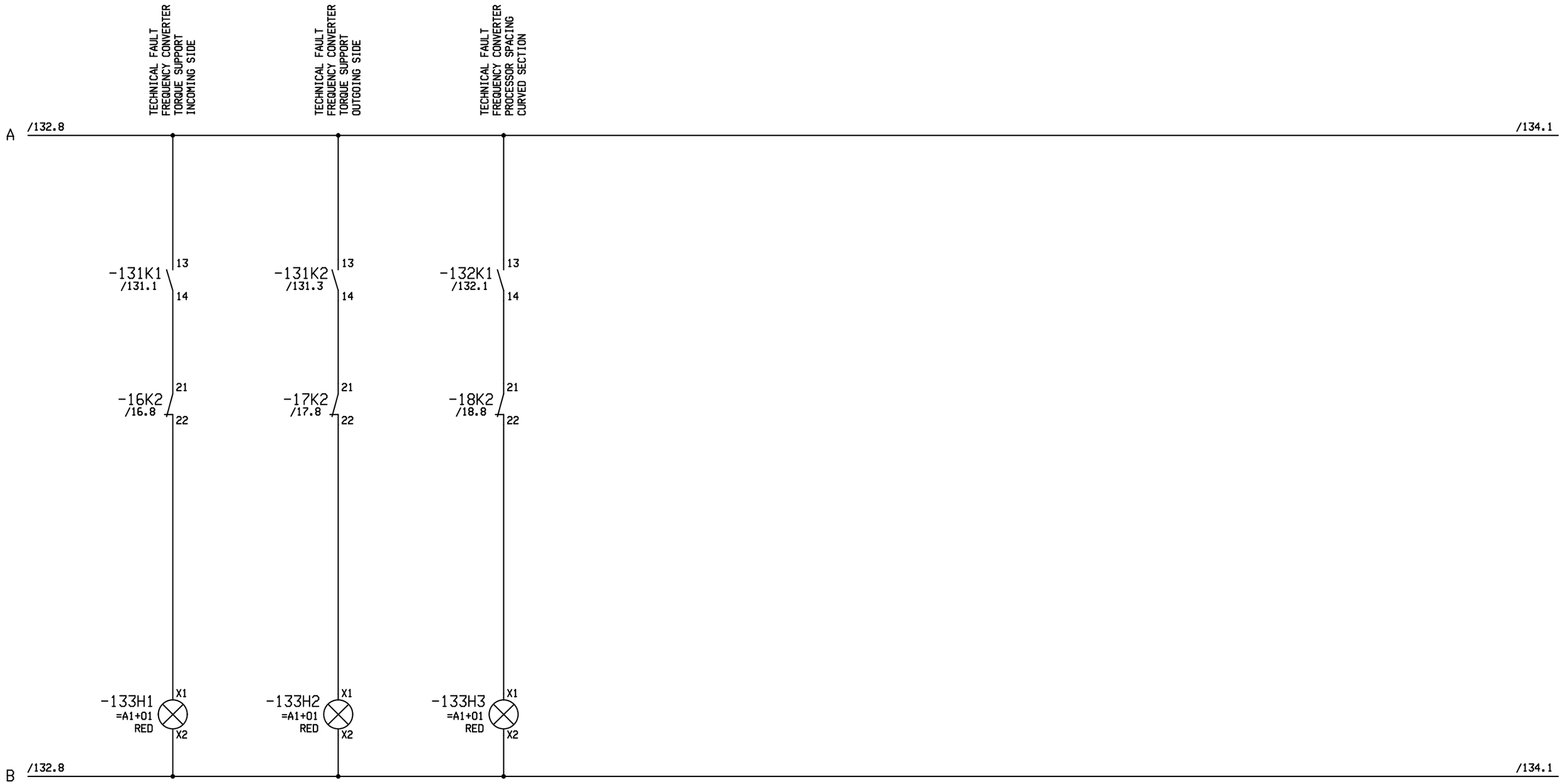

Revision	2.0	Drawn by	SST
Date	19.01.17	Dr.ch.by	FMa
File:	ANWAA4185		

10-MGD BaNa4
WAA0004185
DANANG / VIETNAM

Doppelmayr ®
Innova Patent GmbH
A-6960 WOLFURT / AUSTRIA

STATION CONVEYOR

DRIVE STATION | LV-CONTROL

=A1+01

Date	09.06.16
Sheet :	133
Cont.sheet:	134

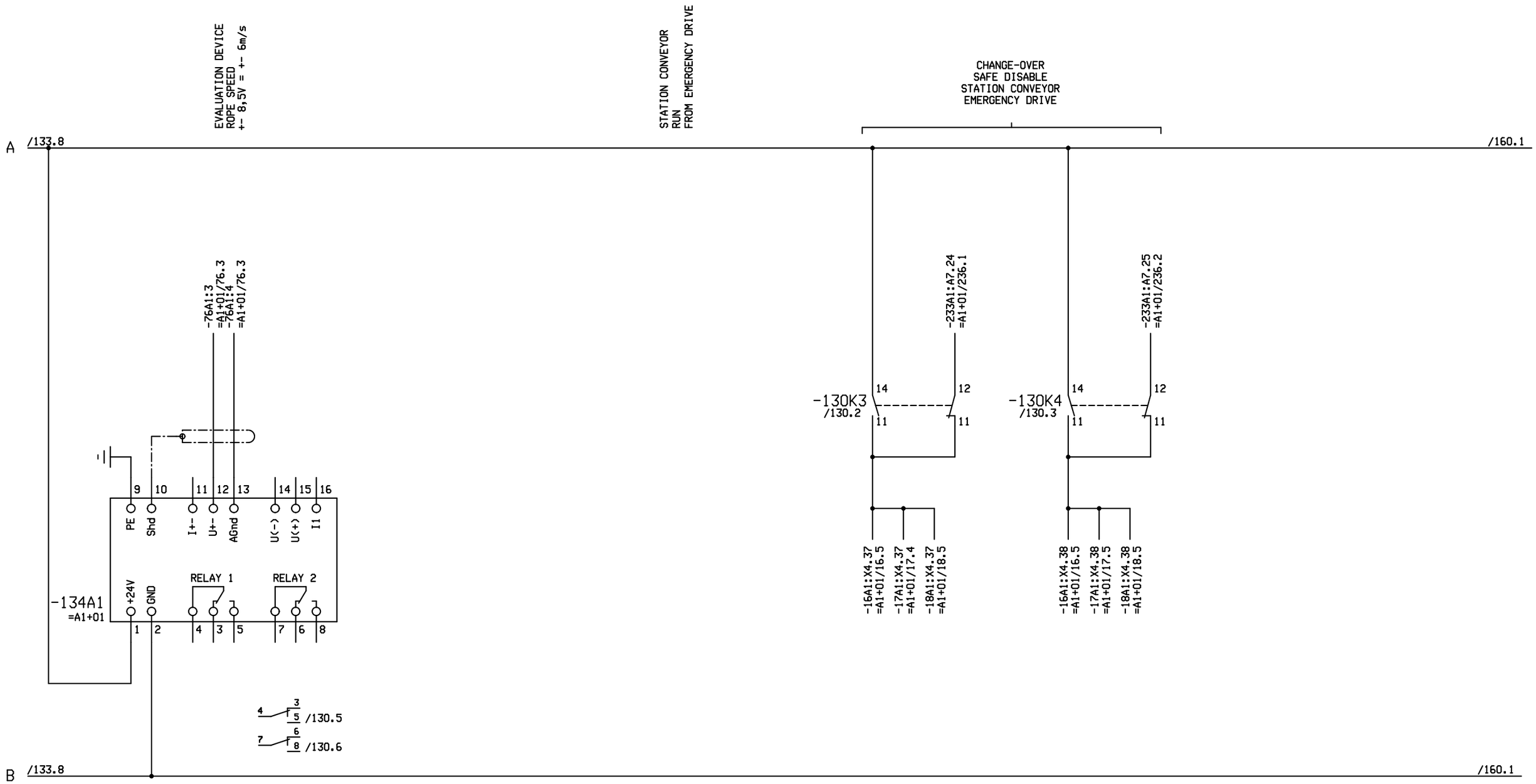

Revision	2.0	Drawn by	SST
Date	19.01.17	Dr.ch.by	FMa
File:	ANWAA4185		

10-MGD BaNa4
WAA0004185
DANANG / VIETNAM

Doppelmayr ®
Innova Patent GmbH
A-6960 WOLFURT / AUSTRIA

STATION CONVEYOR

DRIVE STATION | LV-CONTROL

=A1+01

Date	14.06.16
Sheet :	134
Cont.sheet:	160

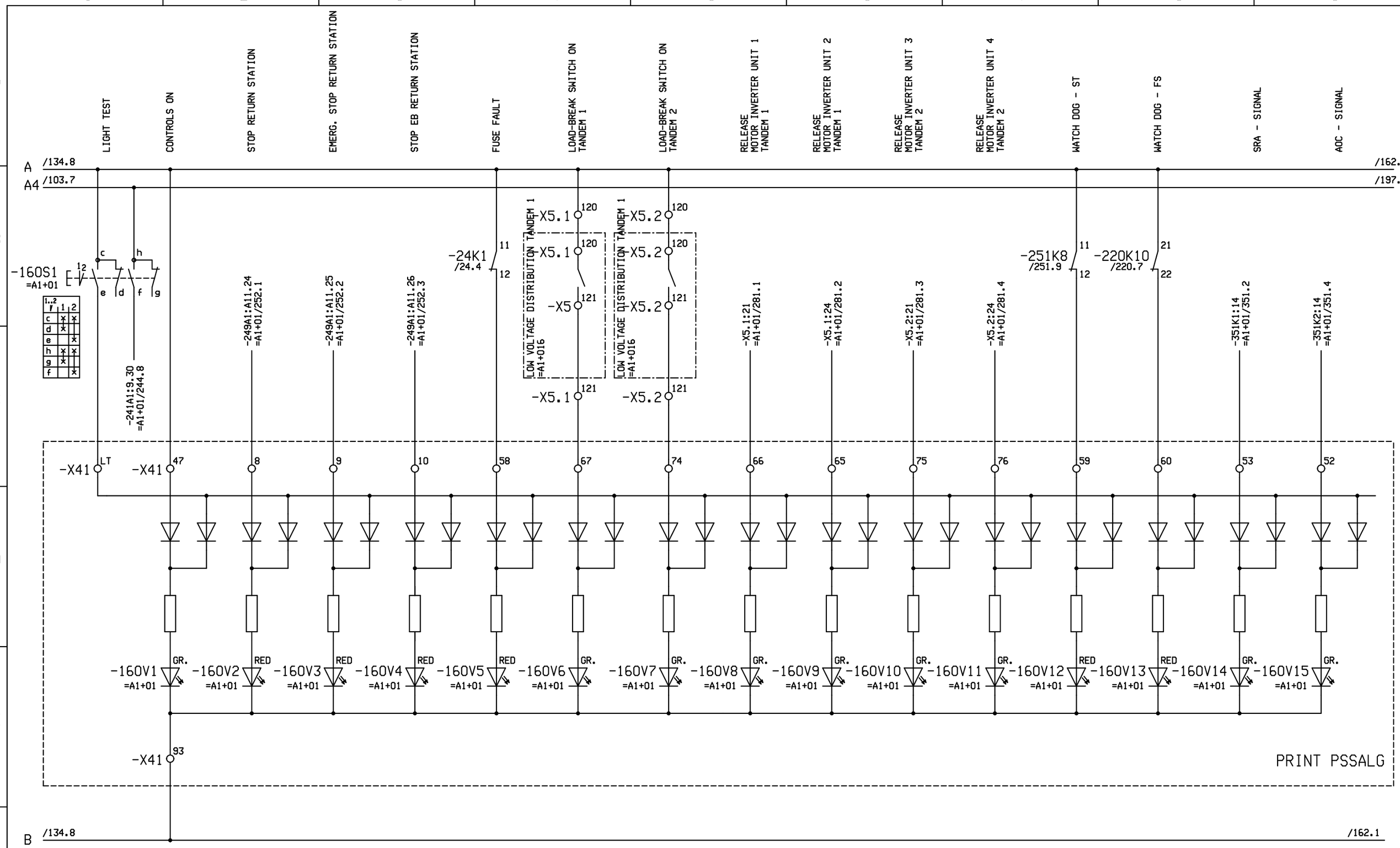

Revision	2.0	Drawn by	SST
Date	19.01.17	Dr.ch.by	FMa
File:	ANWAA4185		

10-MGD BaNa4
WAA0004185
DANANG / VIETNAM

Doppelmayr ®
Innova Patent GmbH
A-6960 WOLFURT / AUSTRIA

CONTROL LIGHTS

DRIVE STATION | LV-CONTROL

=A1+01

Date	19.01.17
Sheet :	160
Cont.sheet:	162

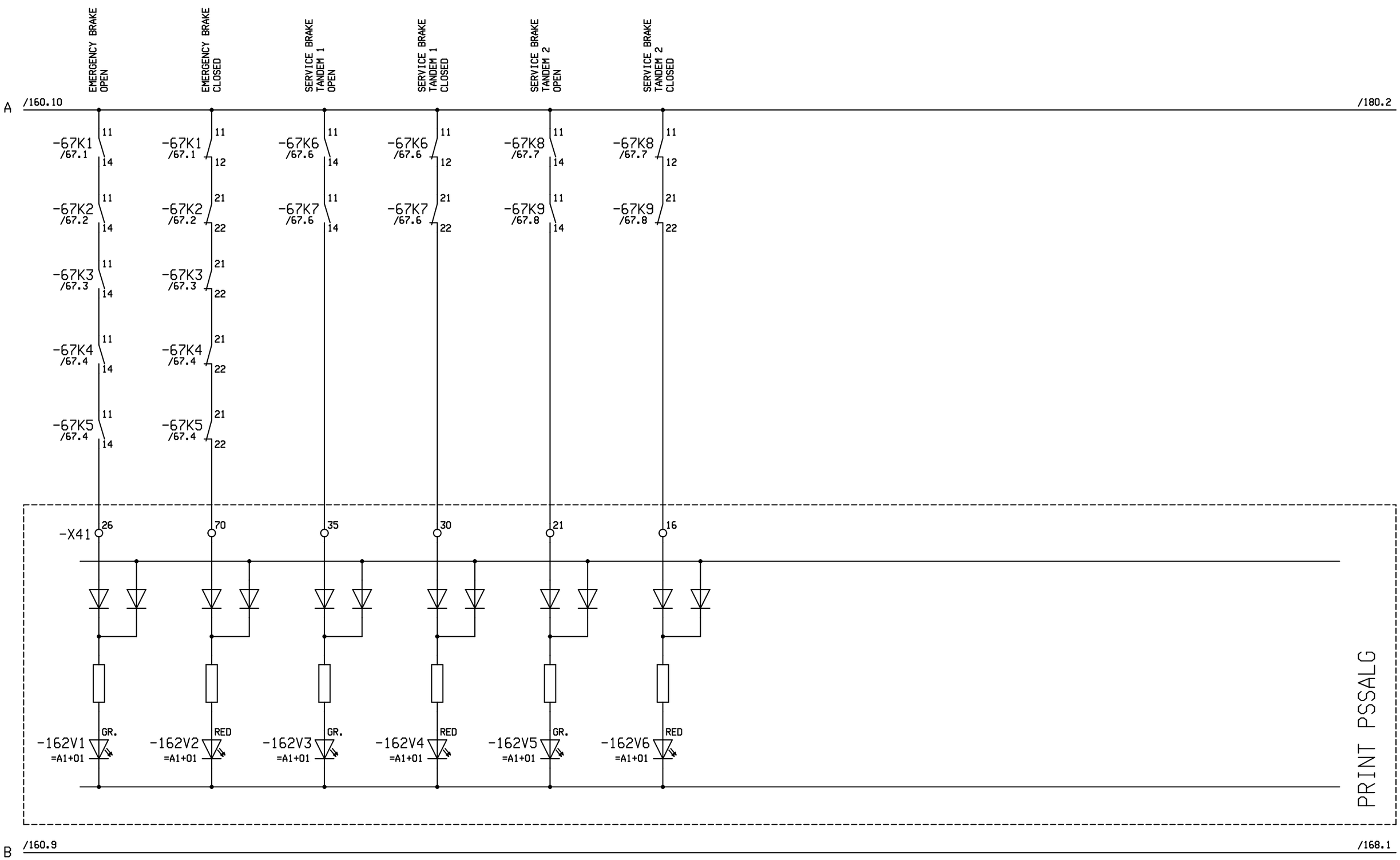

Revision	2.0	Drawn by	SST
Date	19.01.17	Dr.ch.by	FMa
File:	ANWAA4185		

10-MGD BaNa4
WAA0004185
DANANG / VIETNAM

Doppelmayr ®
Innova Patent GmbH
A-6960 WOLFURT / AUSTRIA

CONTROL LIGHTS

DRIVE STATION | LV-CONTROL

=A1+01

Date	27.07.16
Sheet :	162
Cont.sheet:	168

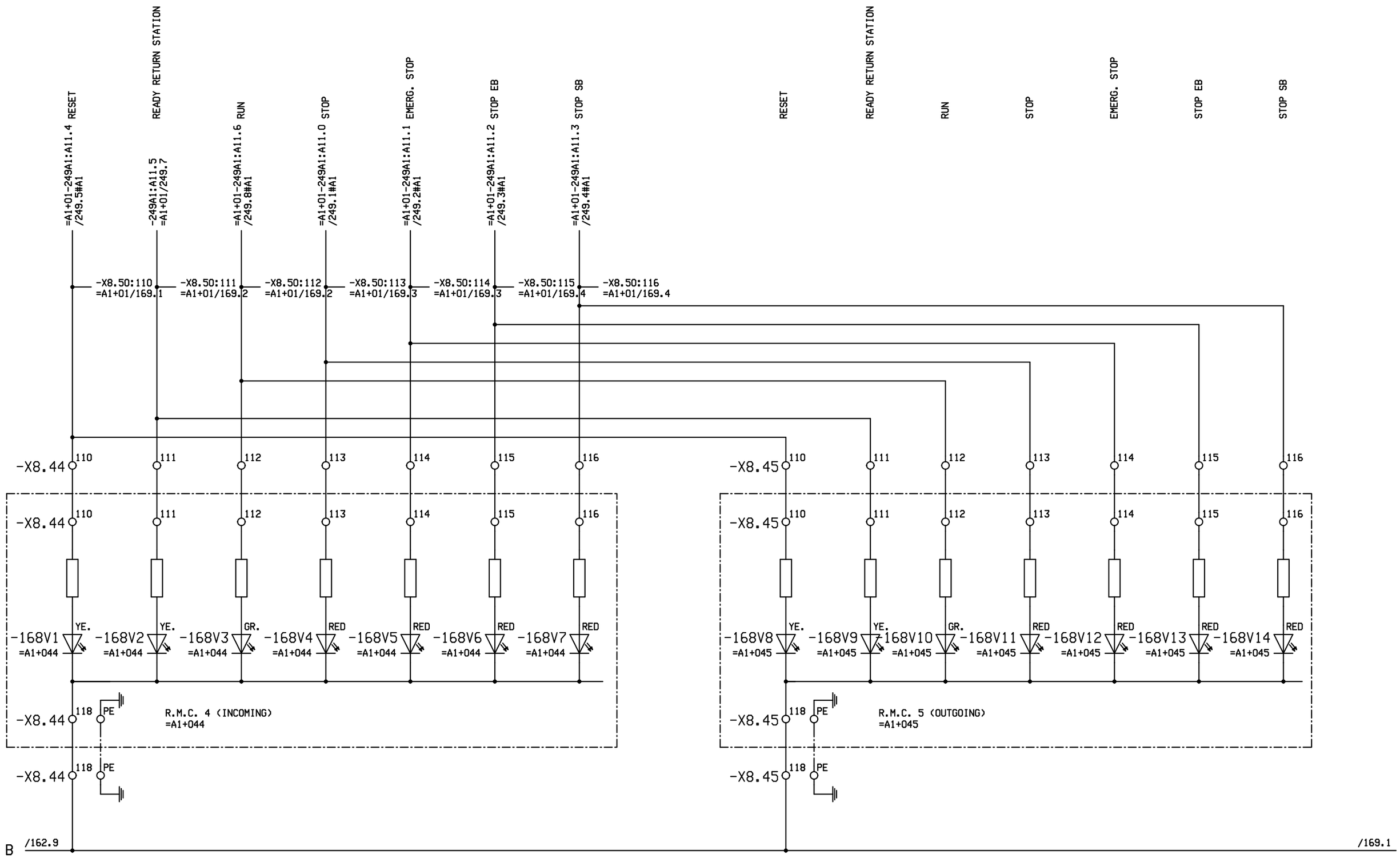

Revision	2.0	Drawn by	SST
Date	19.01.17	Dr.ch.by	FMa

File: ANWAA4185

10-MGD BaNa4
WAA0004185
DANANG / VIETNAM

Doppelmayr ®
Innova Patent GmbH
A-6960 WOLFURT / AUSTRIA

CONTROL LIGHTS

DRIVE STATION | LV-CONTROL

=A1+01

Date	21.04.16
Sheet :	168
Cont.sheet:	169

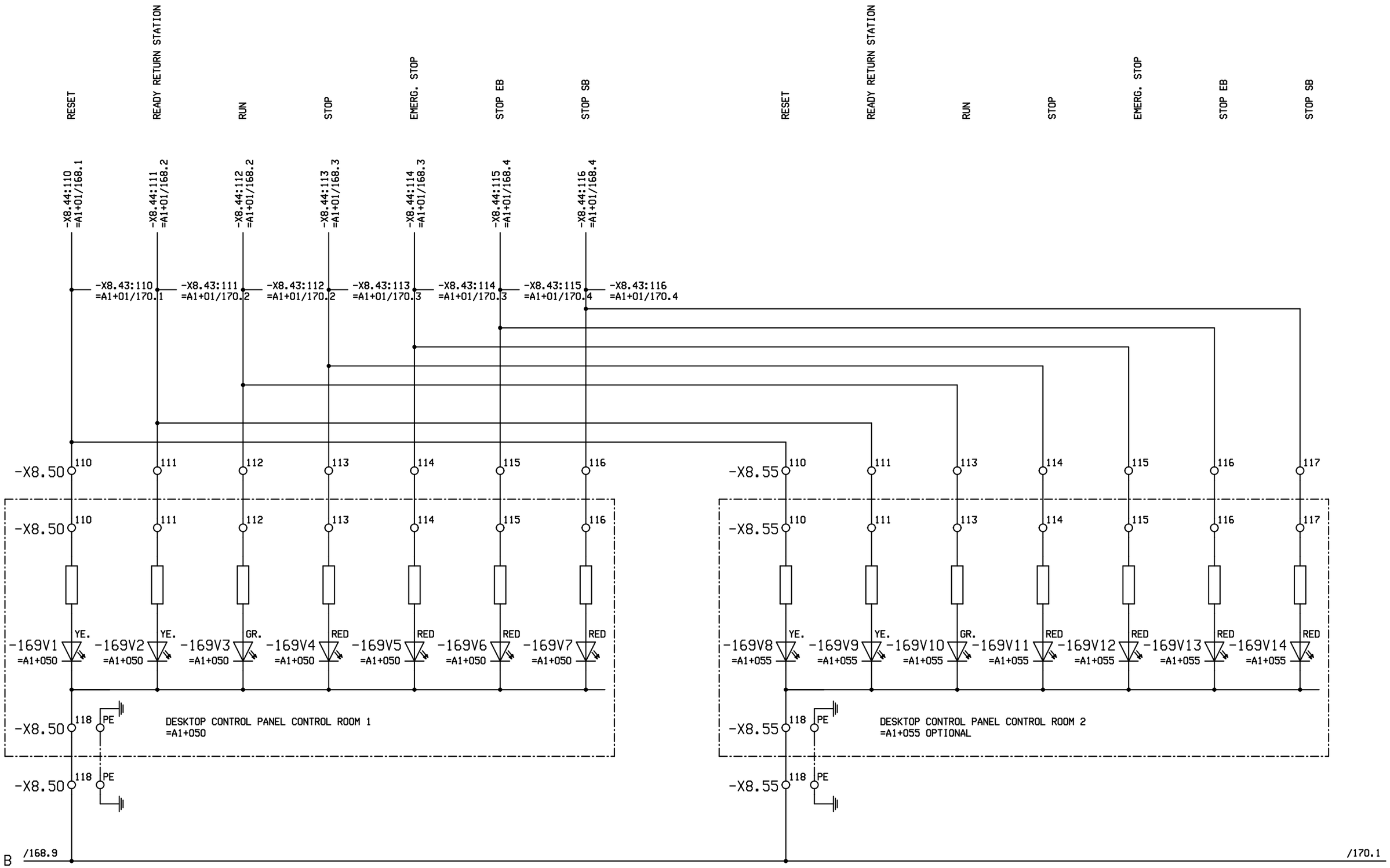

Revision	2.0	Drawn by	SST
Date	19.01.17	Dr.ch.by	FMa
File:	ANWAA4185		

10-MGD BaNa4
WAA0004185
DANANG / VIETNAM

Doppelmayr ®
Innova Patent GmbH
A-6960 WOLFURT / AUSTRIA

CONTROL LIGHTS

DRIVE STATION | LV-CONTROL

=A1+01

Date	21.04.16
Sheet :	169
Cont.sheet:	170

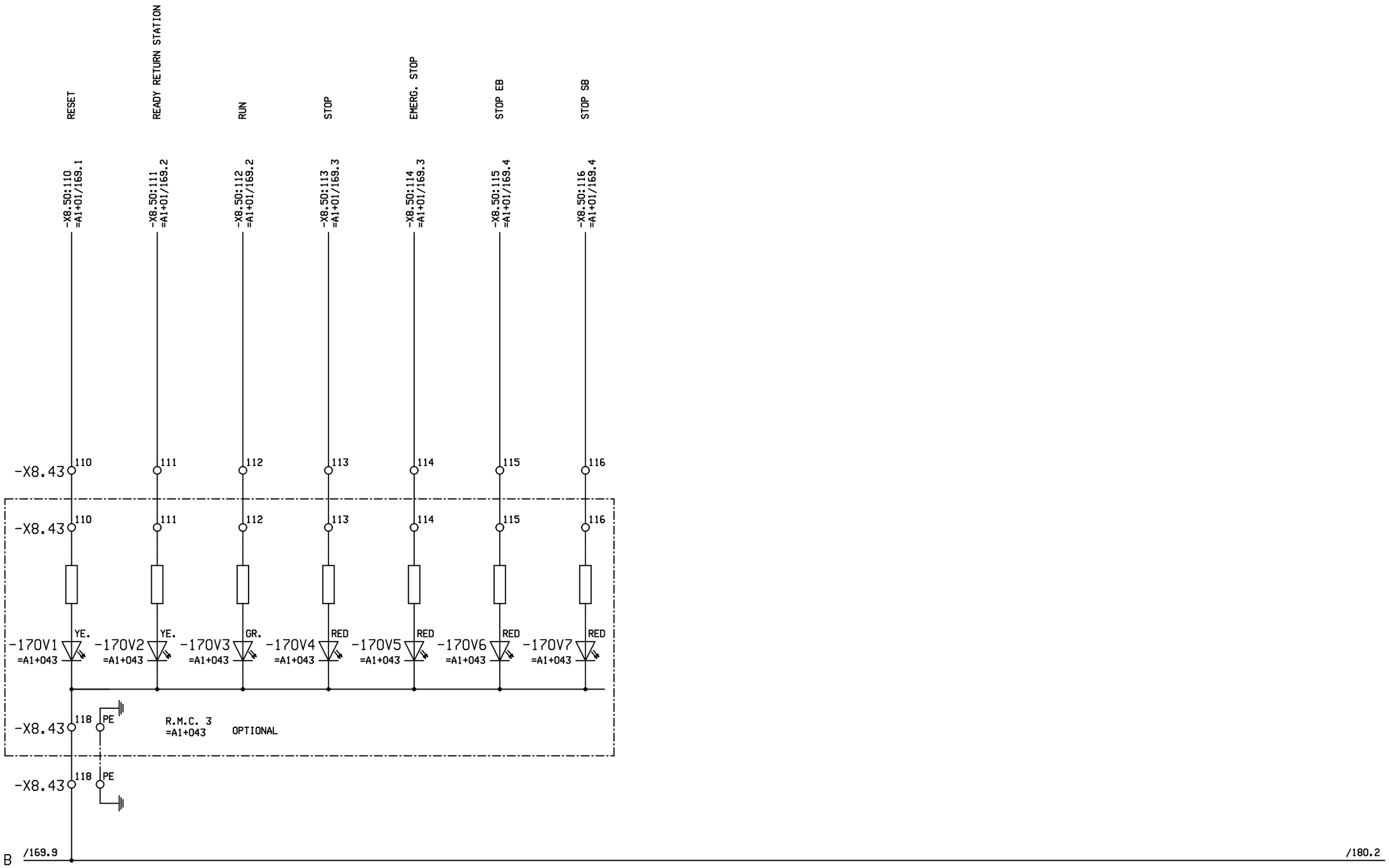

Revision	2.0	Drawn by	SST
Date	19.01.17	Dr.ch.by	FMa
File:	ANWAA4185		

10-MGD BaNa4
WAA0004185
DANANG / VIETNAM

Doppelmayr ®
Innova Patent GmbH
A-6960 WOLFURT / AUSTRIA

CONTROL LIGHTS

DRIVE STATION | LV-CONTROL

=A1+01

Date	21.04.16
Sheet :	170
Cont.sheet:	175

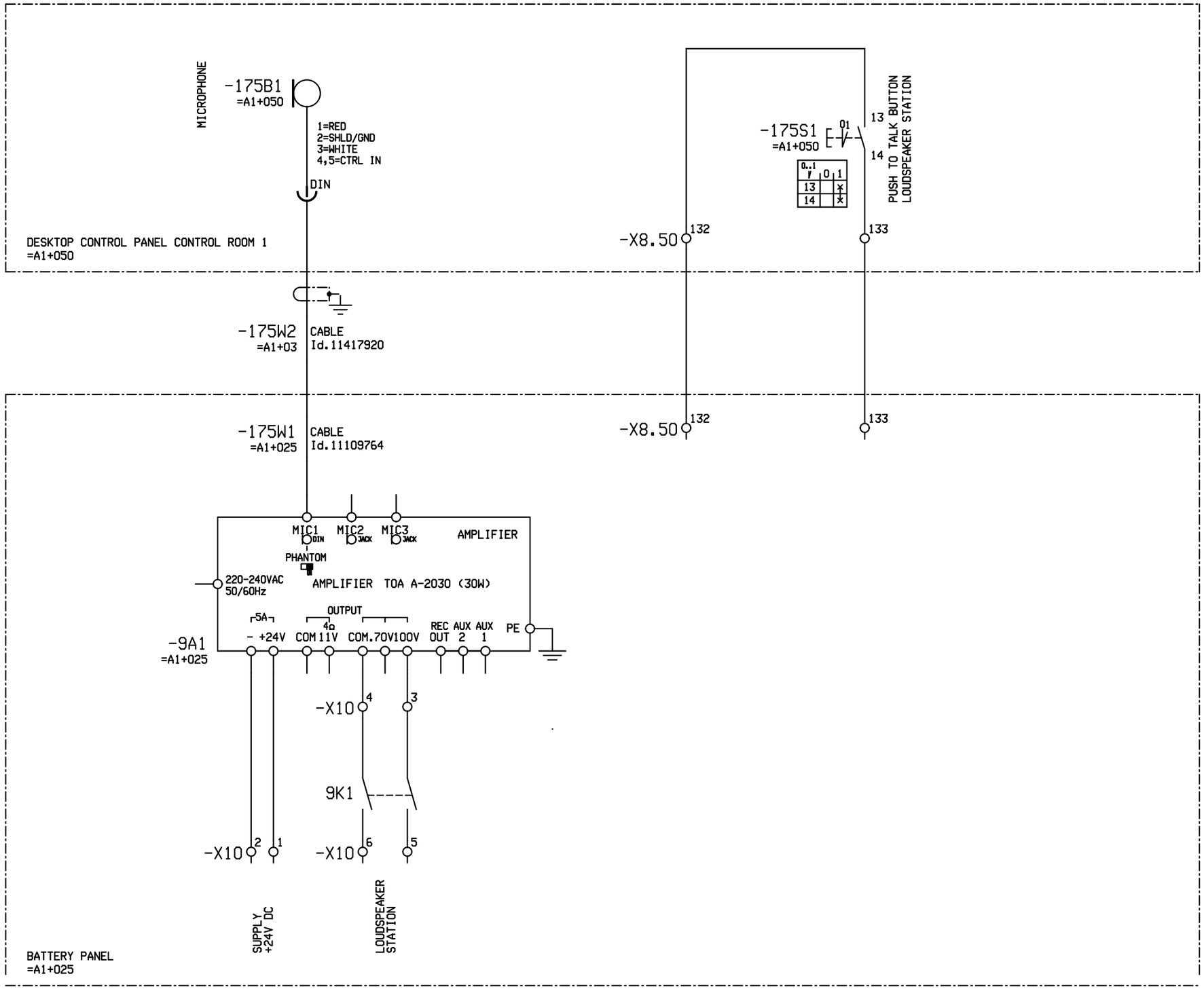

Revision	2.0	Drawn by	SST
Date	19.01.17	Dr.ch.by	FMa
File:	ANWAA4185		

10-MGD BaNa4
WAA0004185
DANANG / VIETNAM

Doppelmayr ®
Innova Patent GmbH
A-6960 WOLFURT / AUSTRIA

LOUDSPEAKER EQUIPMENT

DRIVE STATION | LV-CONTROL

=A1+01

Date	21.04.16
Sheet :	175
Cont.sheet:	180

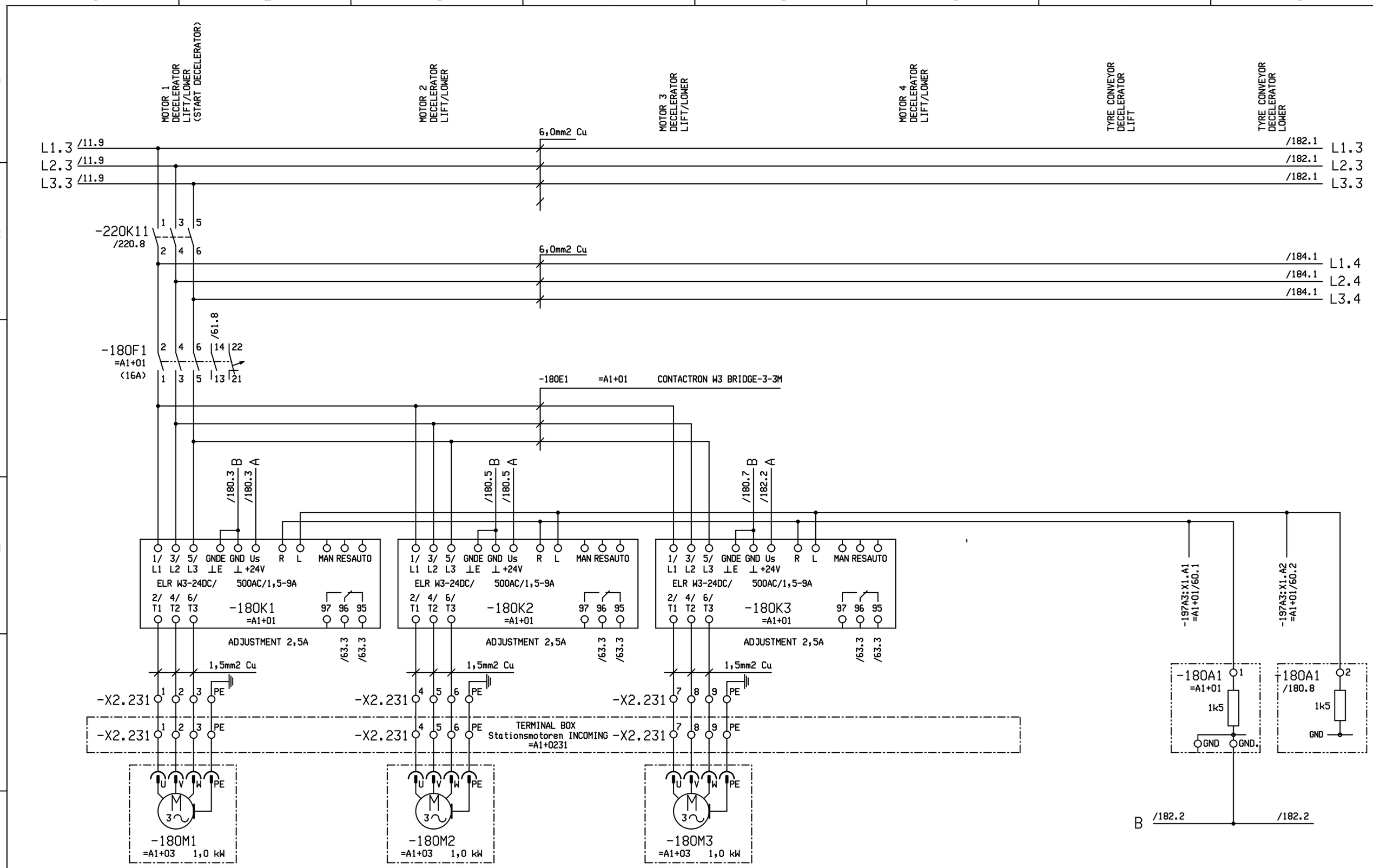

Revision	2.0	Drawn by	SST
Date	19.01.17	Dr.ch.by	FMa

File: ANWAA4185

10-MGD BaNa4
WAA0004185
DANANG / VIETNAM

Doppelmayr ®
Innova Patent GmbH
A-6960 WOLFURT / AUSTRIA

MOTORS - TYRE CONVEYOR DECELERATOR

DRIVE STATION | LV-CONTROL

=A1+01

Date	02.06.16
Sheet :	180
Cont.sheet:	182

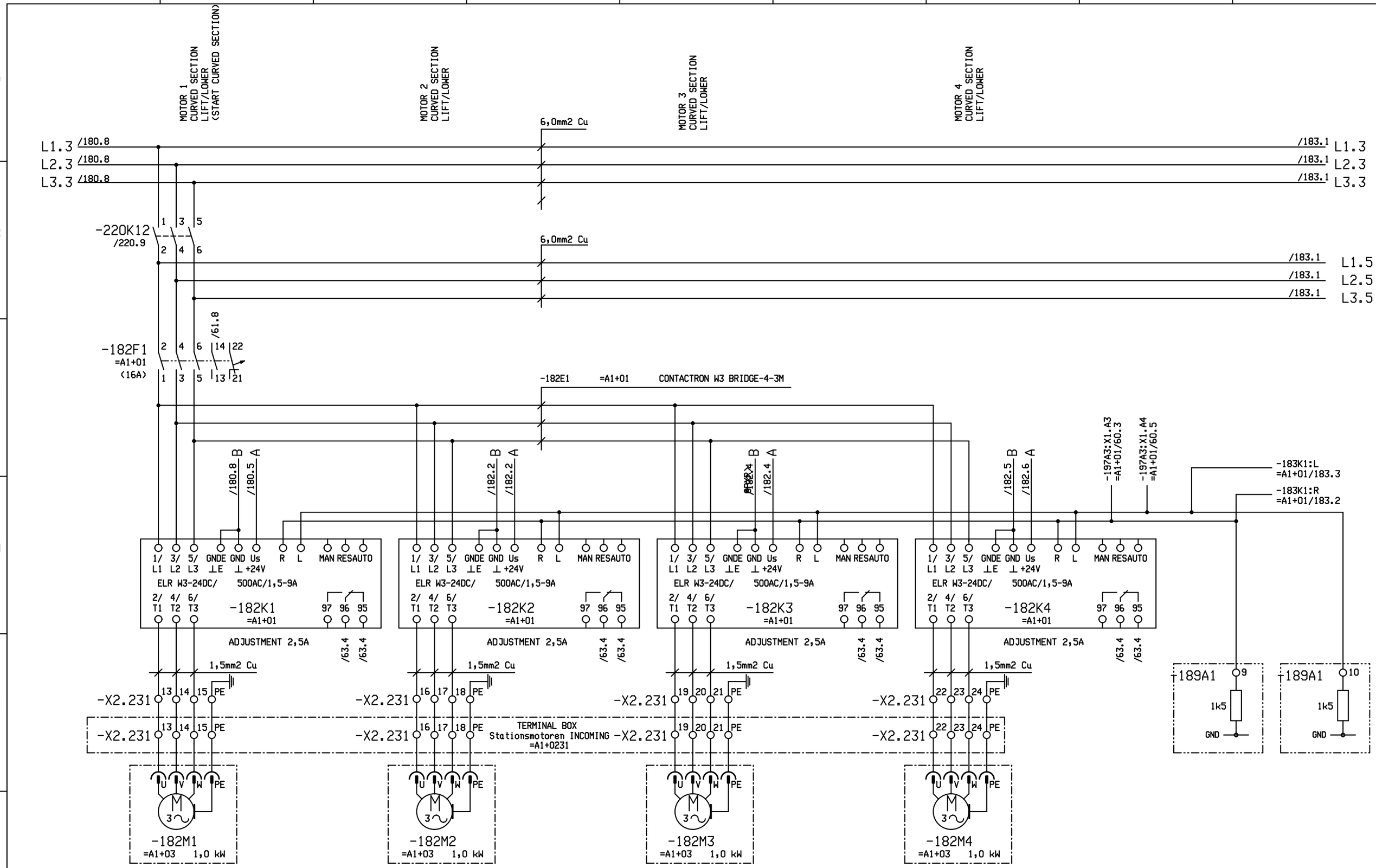

Revision	2.0	Drawn by	SST
Date	19.01.17	Dr.ch.by	FMa

File: ANWAA4185

10-MGD BaNa4
WAA0004185
DANANG / VIETNAM

Doppelmayr ®
Innova Patent GmbH
A-6960 WOLFURT / AUSTRIA

MOTORS - TYRE CONVEYOR CURVED SECTION

DRIVE STATION | LV-CONTROL

=A1+01

Date	02.06.16
Sheet :	182
Cont.sheet:	183

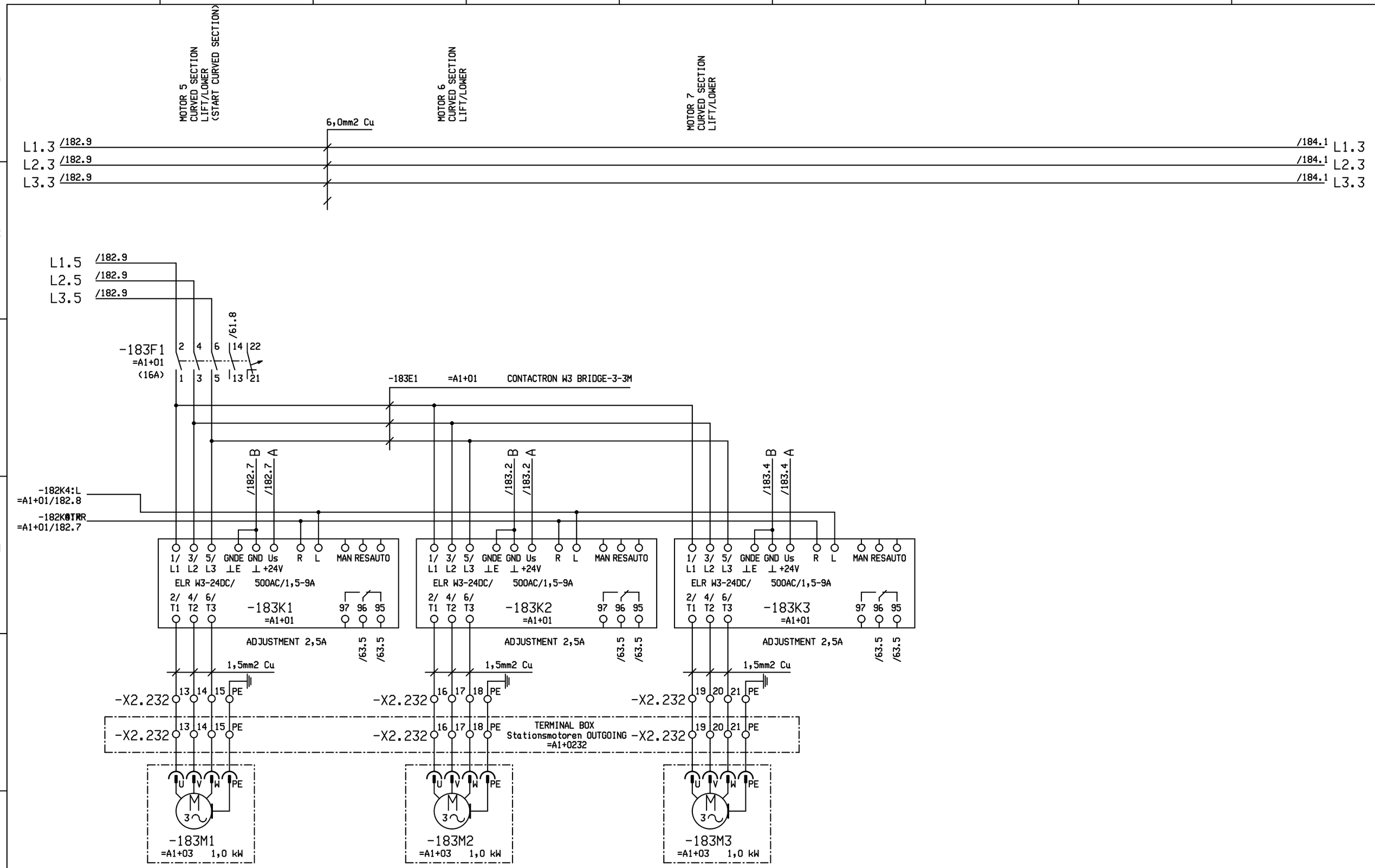

Revision	2.0	Drawn by	SST
Date	19.01.17	Dr.ch.by	FMa

File: ANWAA4185

10-MGD BaNa4
WAA0004185
DANANG / VIETNAM

Doppelmayr ®
Innova Patent GmbH
A-6960 WOLFURT / AUSTRIA

MOTORS - TYRE CONVEYOR CURVED SECTION

DRIVE STATION | LV-CONTROL

=A1+01

Date	02.06.16
Sheet :	183
Cont.sheet:	184

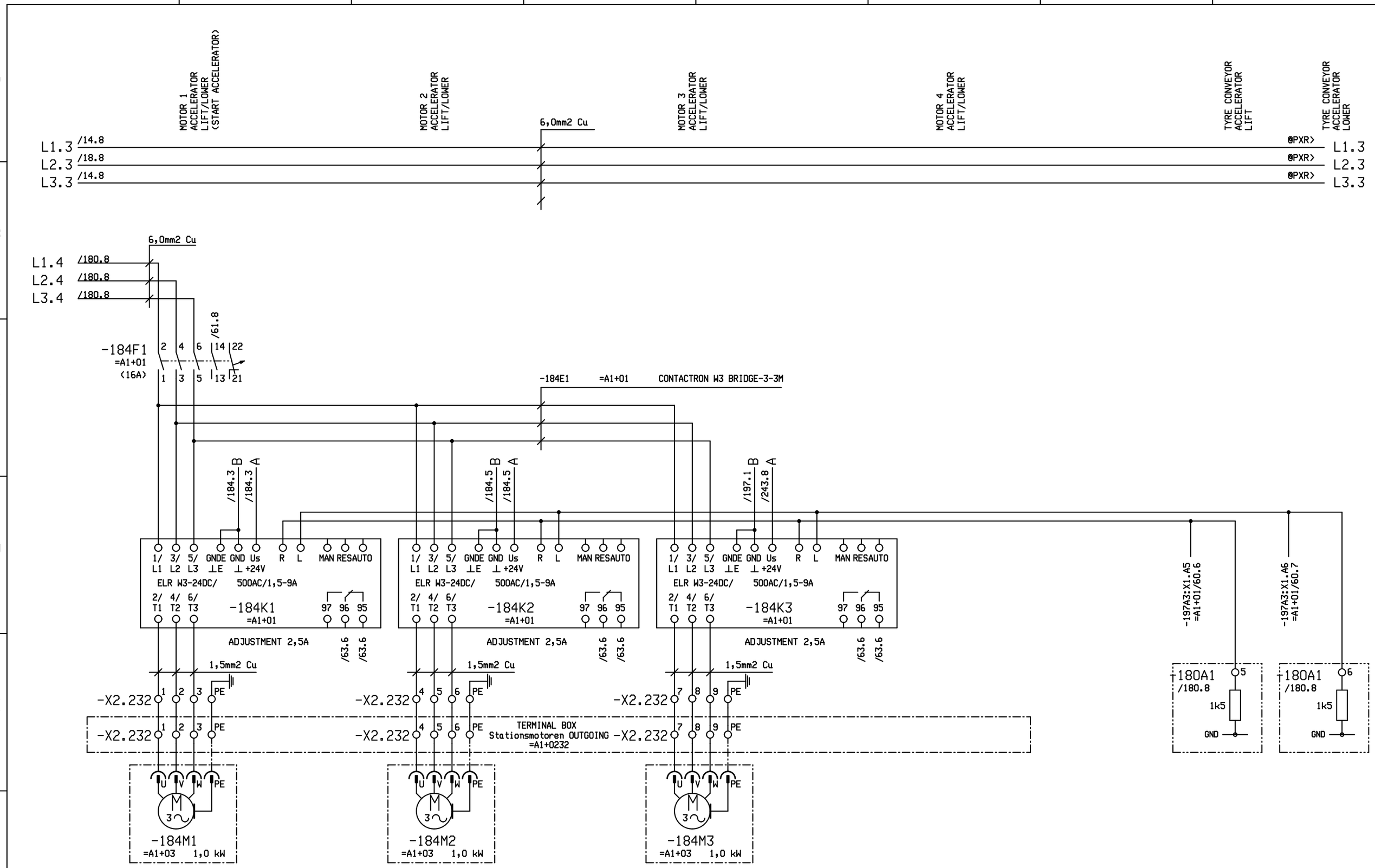

Revision	2.0	Drawn by	SST
Date	19.01.17	Dr.ch.by	FMa

File: ANWAA4185

10-MGD BaNa4
WAA0004185
DANANG / VIETNAM

Doppelmayr ®
Innova Patent GmbH
A-6960 WOLFURT / AUSTRIA

MOTORS - TYRE CONVEYOR ACCELERATOR

DRIVE STATION | LV-CONTROL

=A1+01

Date	02.06.16
Sheet :	184
Cont.sheet:	197

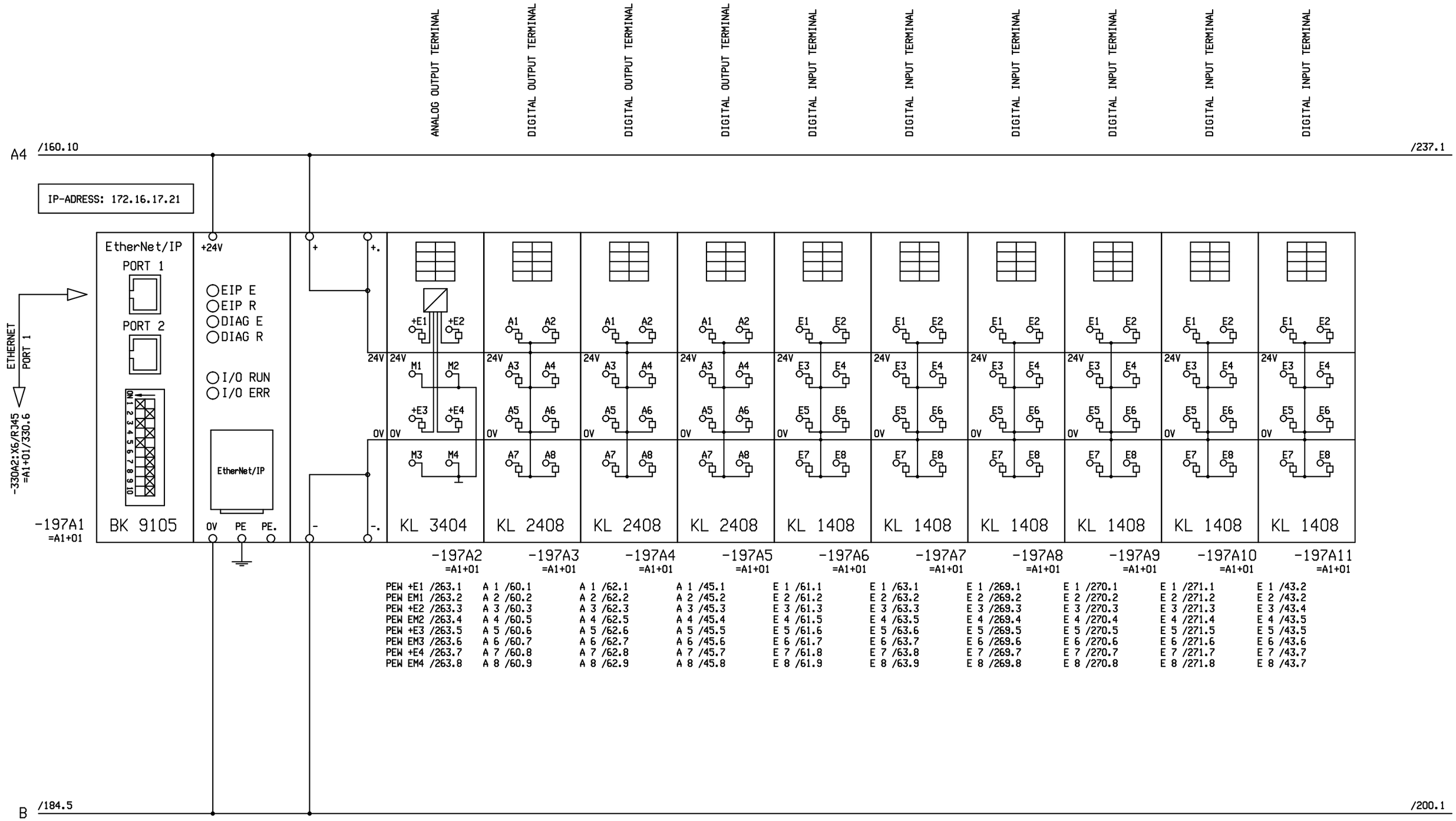

Revision	2.0	Drawn by	SST
Date	19.01.17	Dr.ch.by	FMa
File:	ANWAA4185		

10-MGD BaNa4
WAA0004185
DANANG / VIETNAM

Doppelmayr ®
Innova Patent GmbH
A-6960 WOLFURT / AUSTRIA

IN-OUTPUT MODULE BECKHOFF

DRIVE STATION | LV-CONTROL

=A1+01

Date	07.06.16
Sheet :	197
Cont.sheet:	198

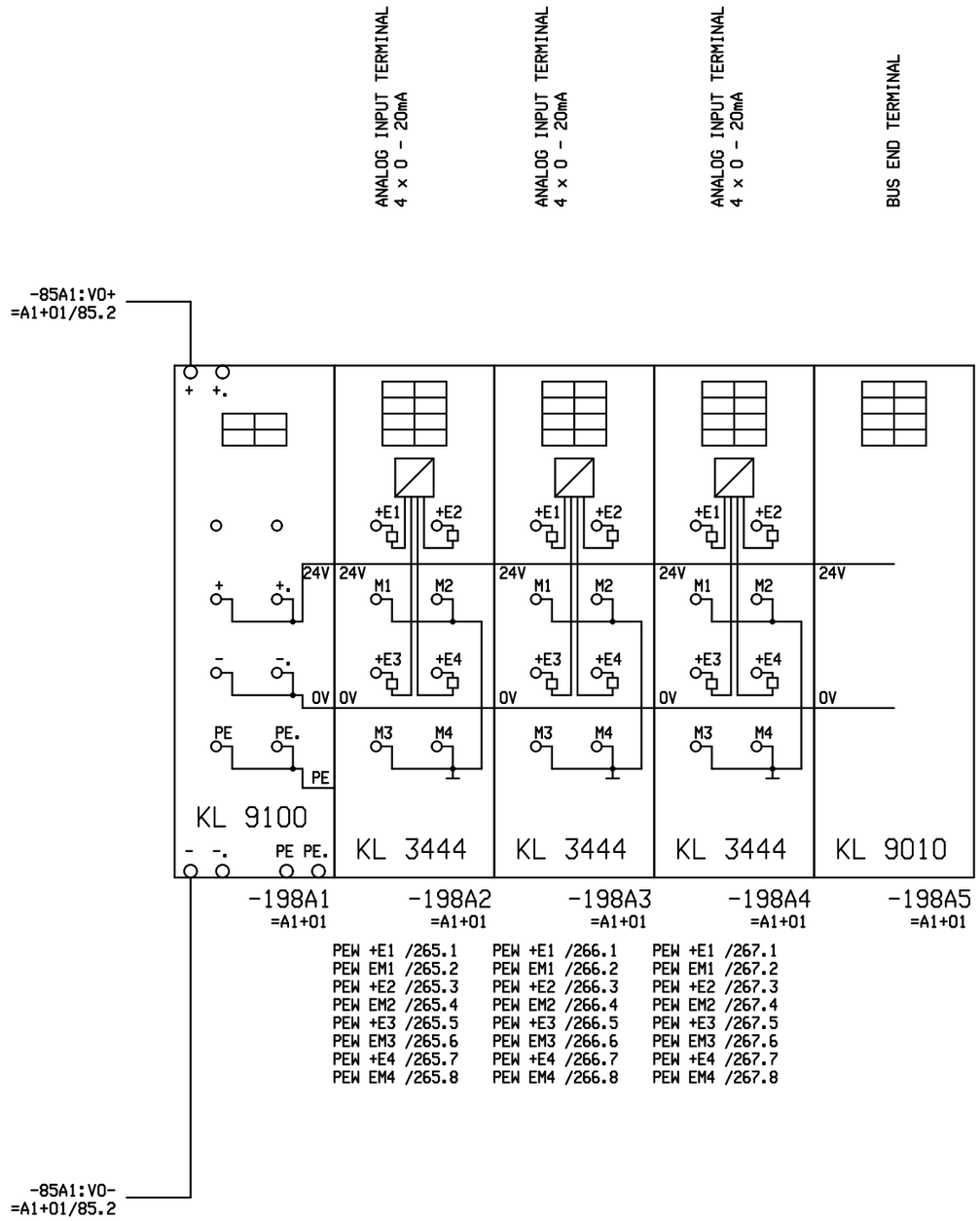

Revision	2.0	Drawn by	SST
Date	19.01.17	Dr.ch.by	FMa
File:	ANWAA4185		

10-MGD BaNa4
WAA0004185
DANANG / VIETNAM

Doppelmayr ®
Innova Patent GmbH
A-6960 WOLFURT / AUSTRIA

ANALOG INPUT TERMINAL BECKHOFF WIND MEASURING SYSTEM

DRIVE STATION | LV-CONTROL

=A1+01

Date	11.07.16
Sheet :	198
Cont.sheet:	200

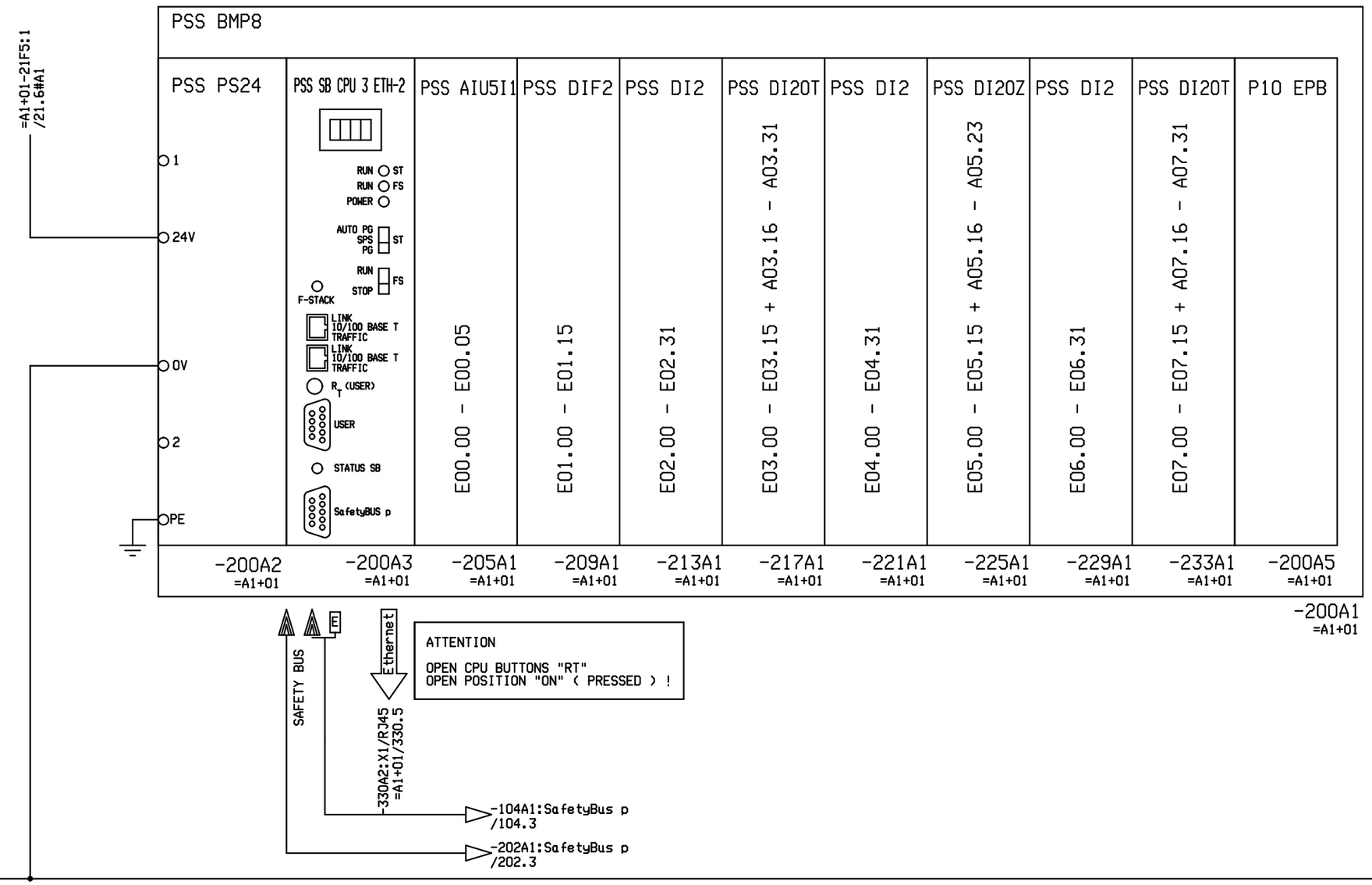

Revision	2.0	Drawn by	SST
Date	19.01.17	Dr.ch.by	FMa
File:	ANWAA4185		

10-MGD BaNa4
WAA0004185
DANANG / VIETNAM

Doppelmayr ®
Innova Patent GmbH
A-6960 WOLFURT / AUSTRIA

POWER SUPPLY PC-SYSTEM

DRIVE STATION | LV-CONTROL

=A1+01

Date	11.05.17
Sheet :	200
Cont.sheet:	201

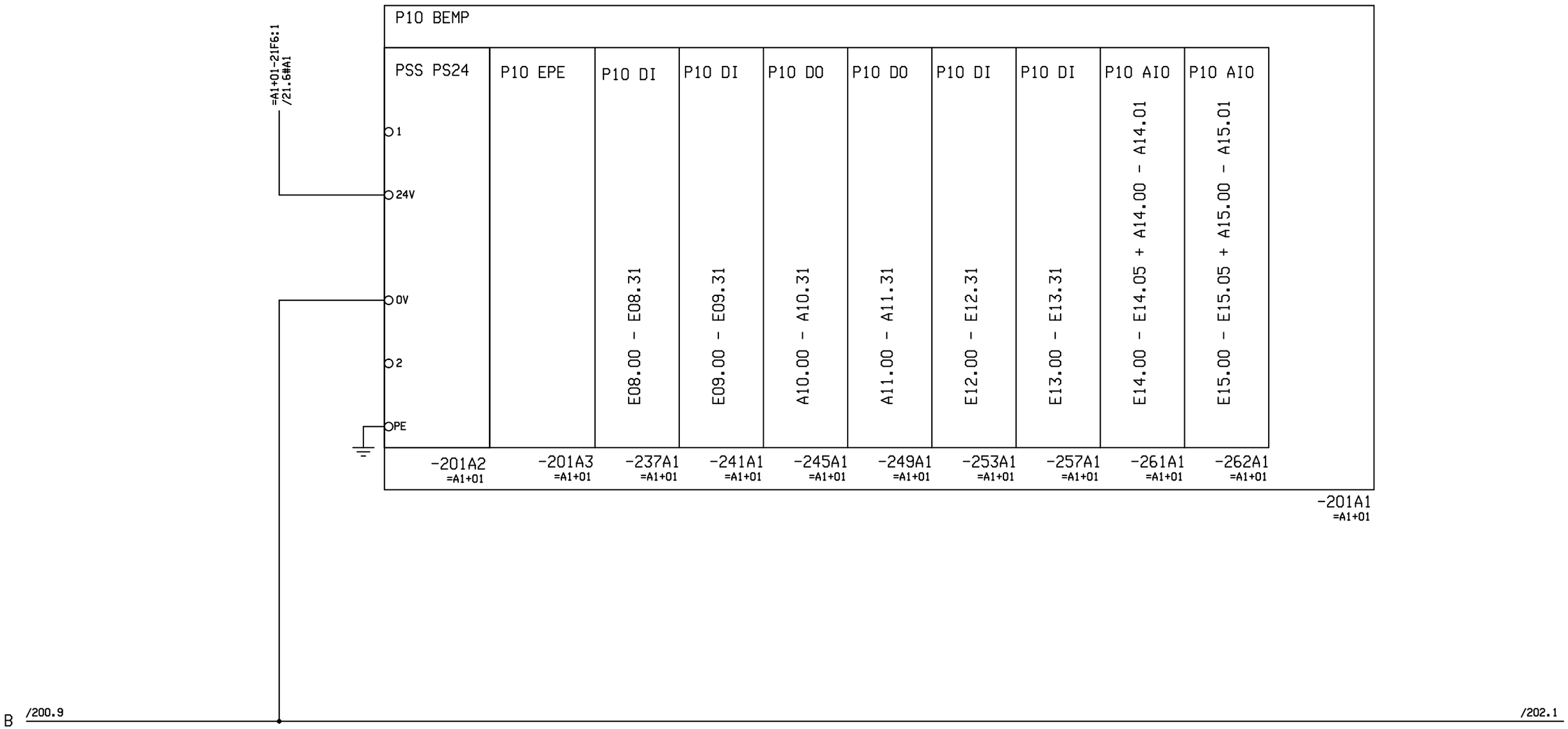

Revision	2.0	Drawn by	SST
Date	19.01.17	Dr.ch.by	FMa
File:	ANWAA4185		

10-MGD BaNa4
WAA0004185
DANANG / VIETNAM

Doppelmayr ®
Innova Patent GmbH
A-6960 WOLFURT / AUSTRIA

POWER SUPPLY PC-SYSTEM

DRIVE STATION | LV-CONTROL

=A1+01

Date	11.05.17
Sheet :	201
Cont.sheet:	202

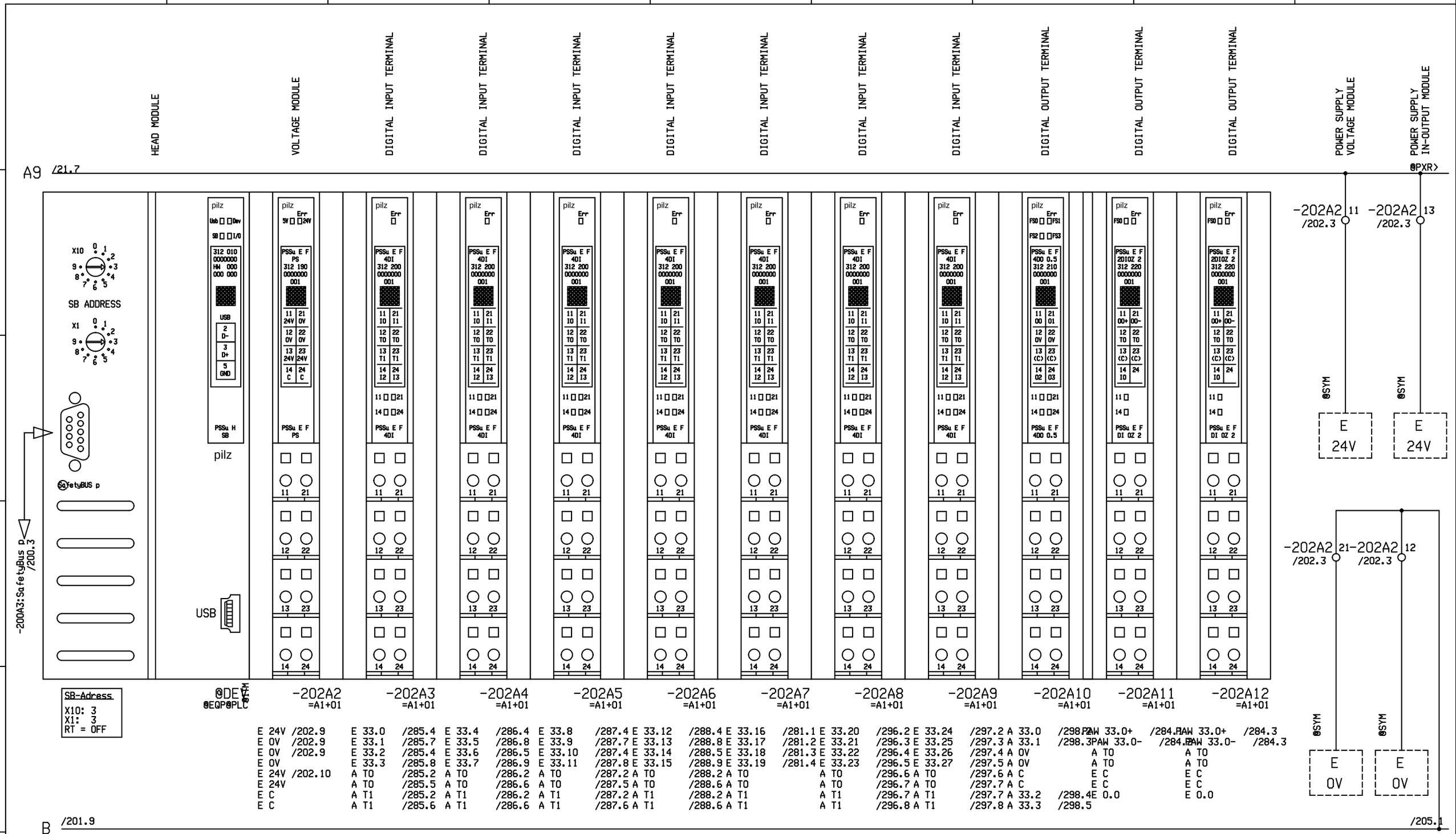

Revision	2.0	Drawn by	SST
Date	19.01.17	Dr.ch.by	FMa
File:	ANWAA4185		

10-MGD BaNa4
WAA0004185
DANANG / VIETNAM

Doppelmayr ®
Innova Patent GmbH
A-6960 WOLFURT / AUSTRIA

SAFETYBUS EXTENSION EW33

DRIVE STATION | LV-CONTROL

=A1+01

Date	20.01.17
Sheet :	202
Cont.sheet:	205

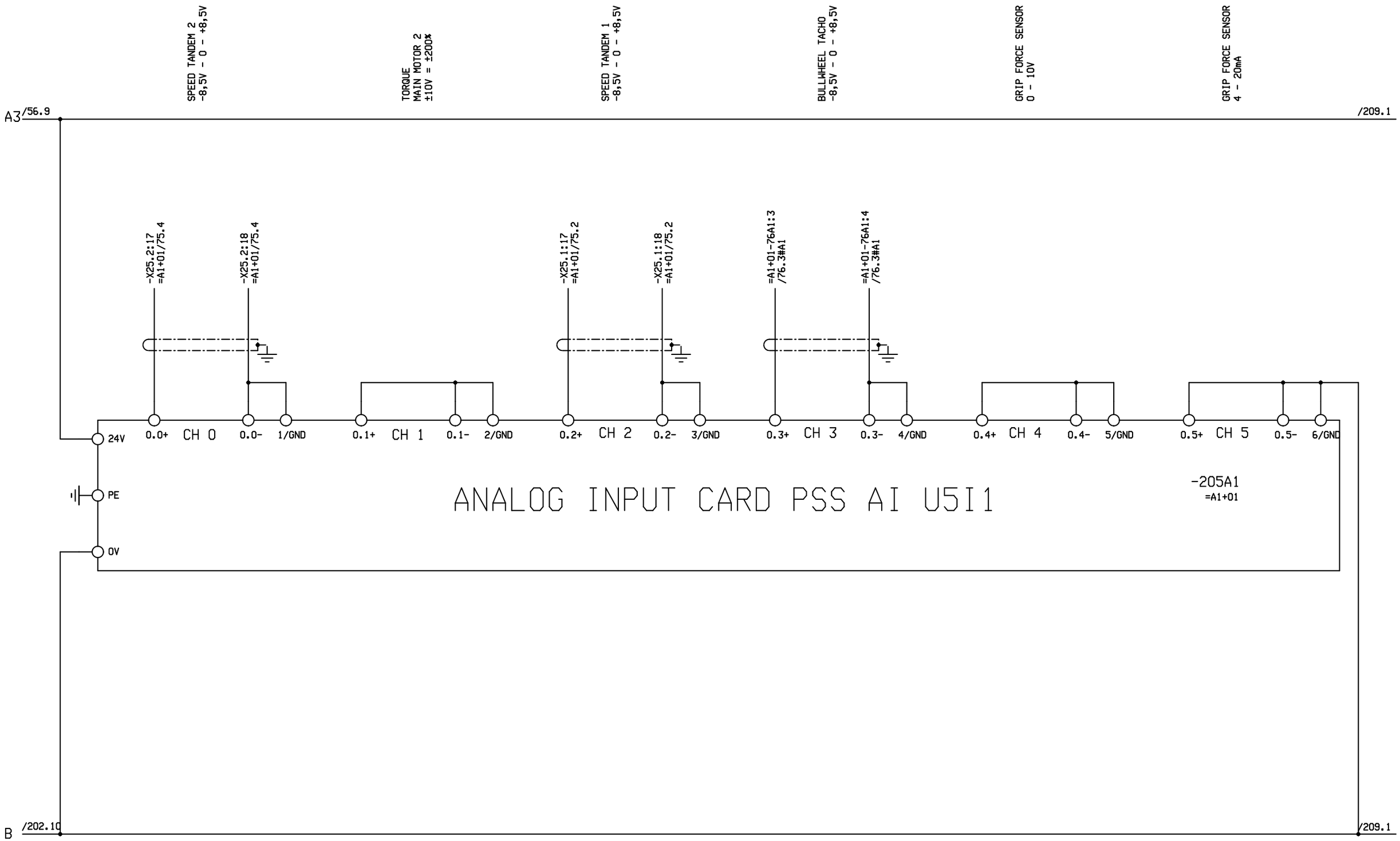

Revision	2.0	Drawn by	SST
Date	19.01.17	Dr.ch.by	FMa
File:	ANWAA4185		

10-MGD BaNa4
WAA0004185
DANANG / VIETNAM

Doppelmayr ®
Innova Patent GmbH
A-6960 WOLFURT / AUSTRIA

ANALOG INPUT (FS)

DRIVE STATION | LV-CONTROL

=A1+01

Date	03.06.16
Sheet :	205
Cont.sheet:	209

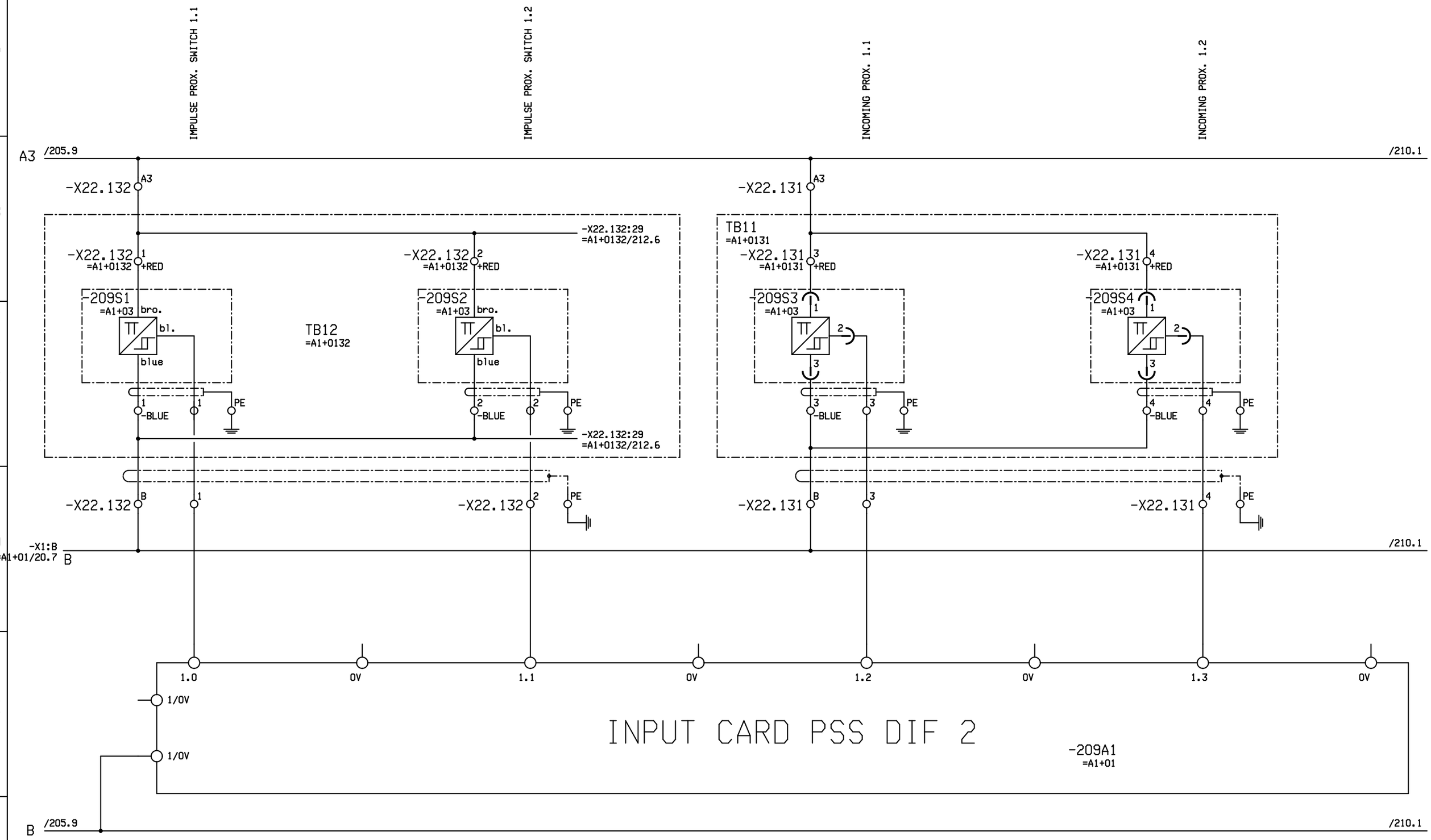

Revision	2.0	Drawn by	SST
Date	19.01.17	Dr.ch.by	FMa
File:	ANWAA4185		

10-MGD BaNa4
WAA0004185
DANANG / VIETNAM

Doppelmayr ®
Innova Patent GmbH
A-6960 WOLFURT / AUSTRIA

INPUT PLC (FS)

DRIVE STATION | LV-CONTROL

=A1+01

Date	21.04.16
Sheet :	209
Cont.sheet:	210

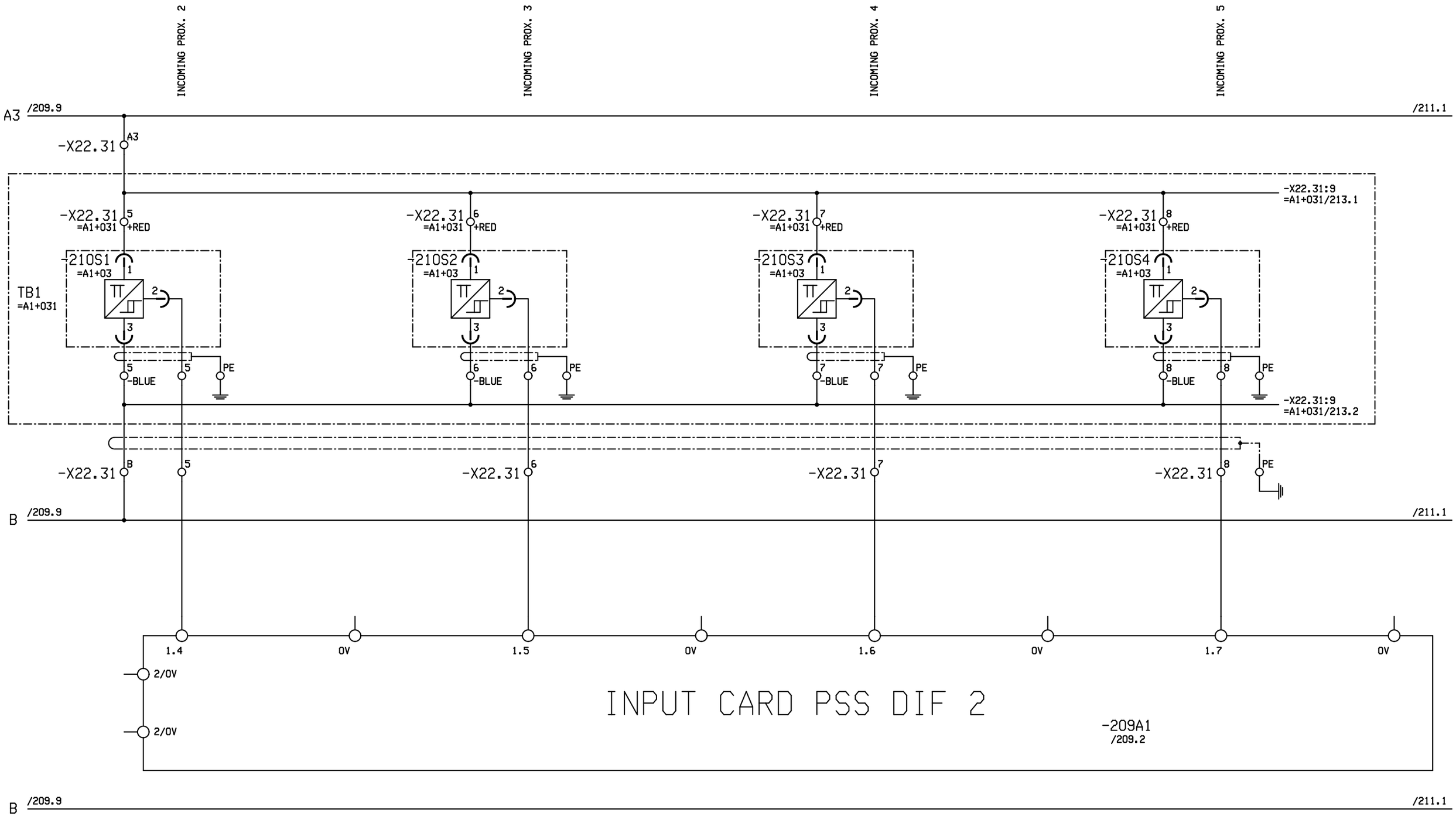

Revision	2.0	Drawn by	SST
Date	19.01.17	Dr.ch.by	FMa
File:	ANWAA4185		

10-MGD BaNa4
WAA0004185
DANANG / VIETNAM

Doppelmayr ®
Innova Patent GmbH
A-6960 WOLFURT / AUSTRIA

INPUT PLC (FS)

DRIVE STATION | LV-CONTROL

=A1+01

Date	07.06.16
Sheet :	210
Cont.sheet:	211

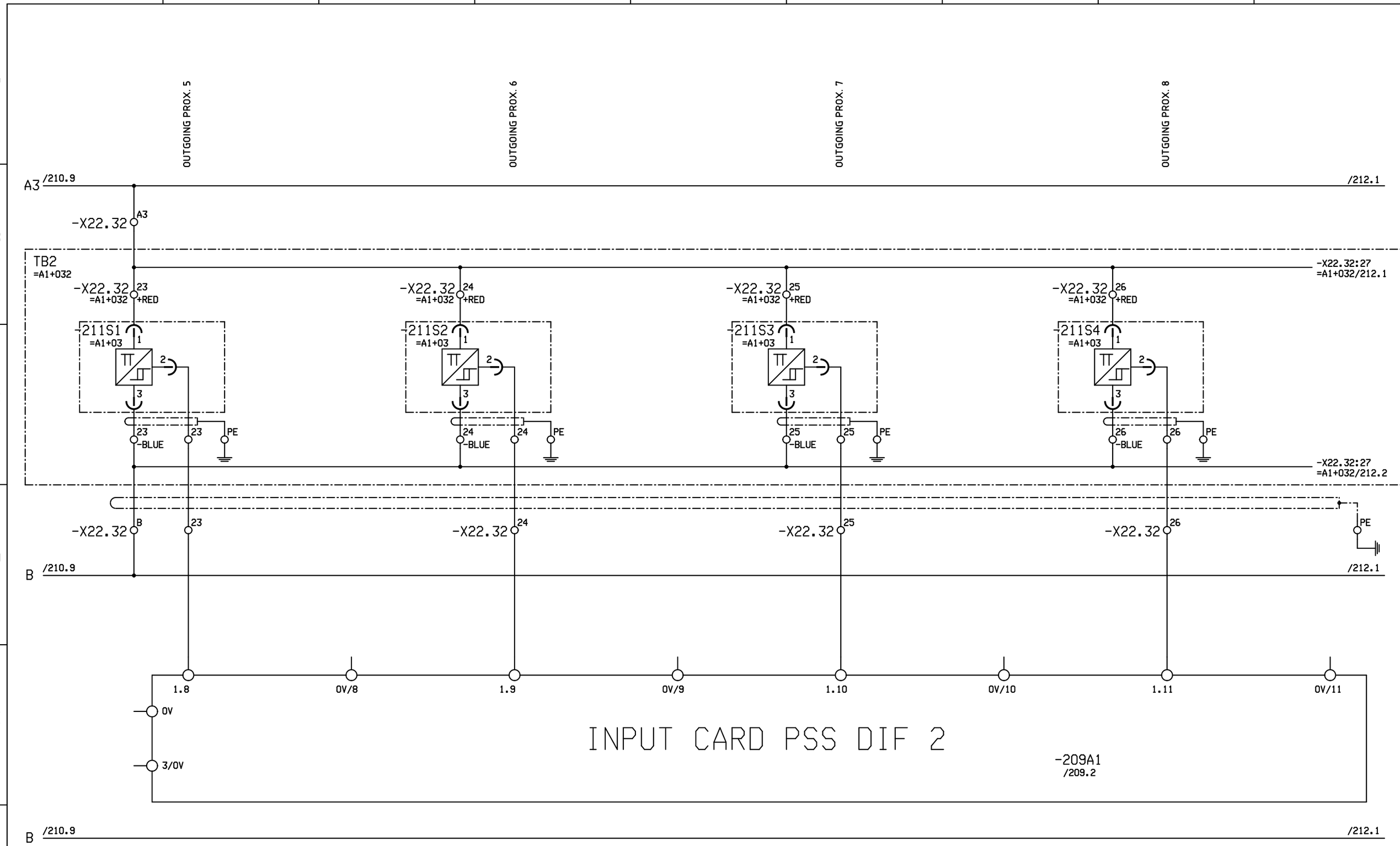

Revision	2.0	Drawn by	SST
Date	19.01.17	Dr.ch.by	FMa

File: ANWAA4185

10-MGD BaNa4
WAA0004185
DANANG / VIETNAM

Doppelmayr ®
Innova Patent GmbH
A-6960 WOLFURT / AUSTRIA

INPUT PLC (FS)

DRIVE STATION | LV-CONTROL

=A1+01

Date	21.04.16
Sheet :	211
Cont.sheet:	212

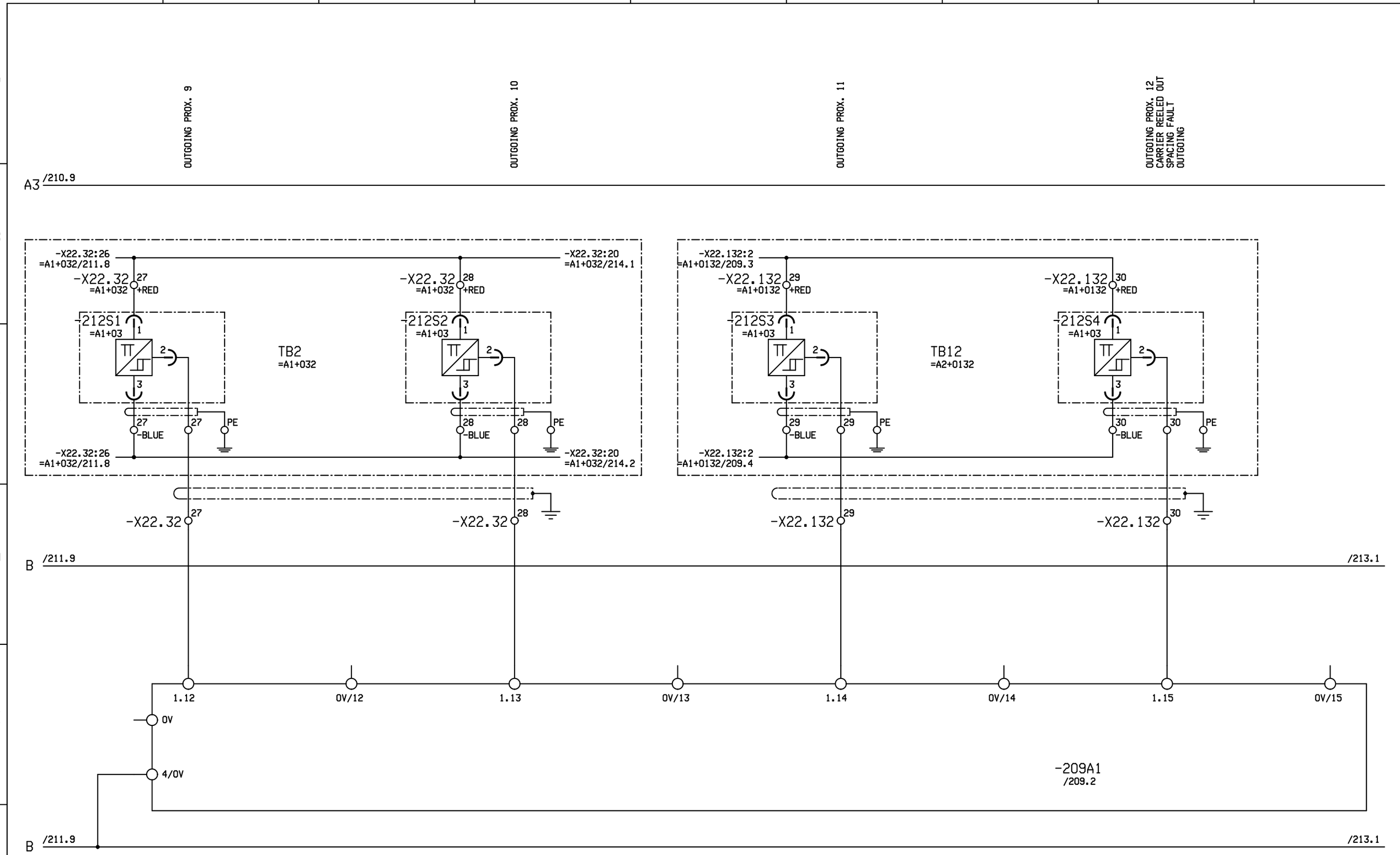

Revision	2.0	Drawn by	SST
Date	19.01.17	Dr.ch.by	FMa
File:	ANWAA4185		

10-MGD BaNa4
WAA0004185
DANANG / VIETNAM

Doppelmayr ®
Innova Patent GmbH
A-6960 WOLFURT / AUSTRIA

INPUT PLC (FS)

DRIVE STATION | LV-CONTROL

=A1+01

Date	27.04.16
Sheet :	212
Cont.sheet:	213

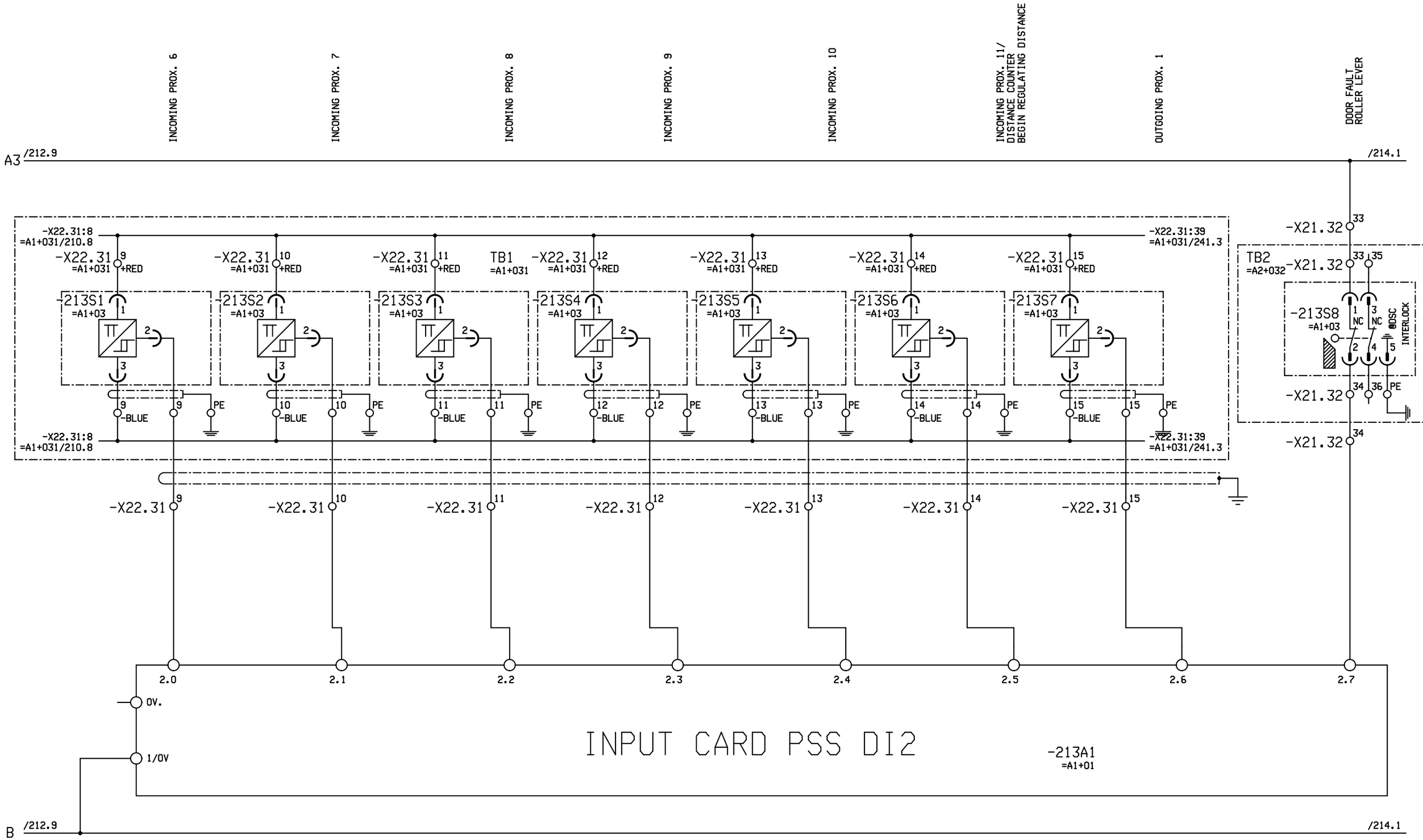

Revision	2.0	Drawn by	SST
Date	19.01.17	Dr.ch.by	FMa

File: ANWAA4185

10-MGD BaNa4
WAA0004185
DANANG / VIETNAM

Doppelmayr ®
Innova Patent GmbH
A-6960 WOLFURT / AUSTRIA

INPUT PLC (FS)

DRIVE STATION | LV-CONTROL

=A1+01

Date	18.10.16
Sheet :	213
Cont.sheet:	214

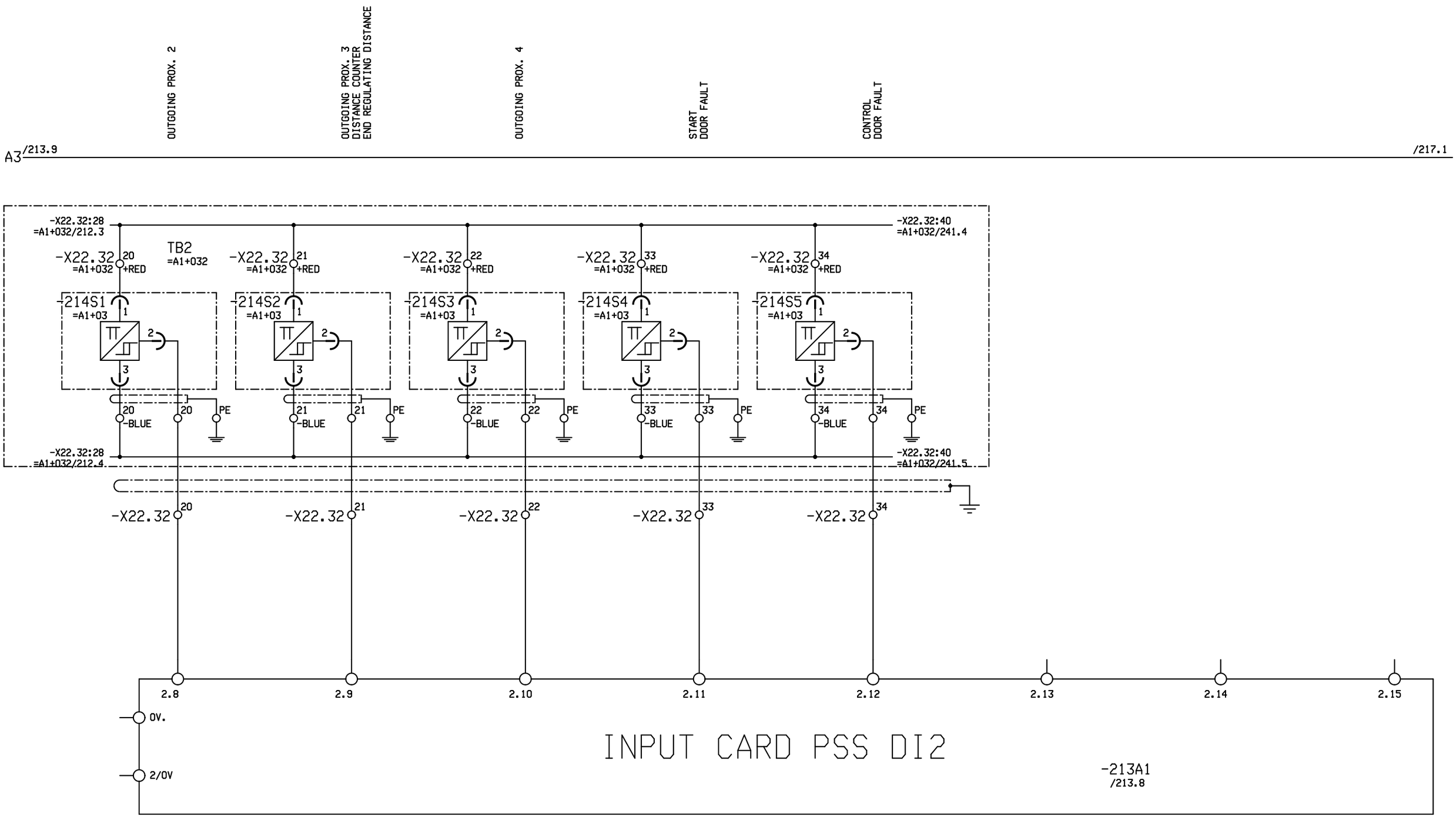

Revision	2.0	Drawn by	SST	10-MGD BaNa4	Doppelmayr ®	INPUT PLC (FS)	=A1+01
Date	19.01.17	Dr.ch.by	FMa	WAA0004185	Innova Patent GmbH		Date 18.10.16
File:	ANWAA4185			DANANG / VIETNAM	A-6960 WOLFURT / AUSTRIA	DRIVE STATION / LV-CONTROL	Sheet : 214
							Cont.sheet: 215

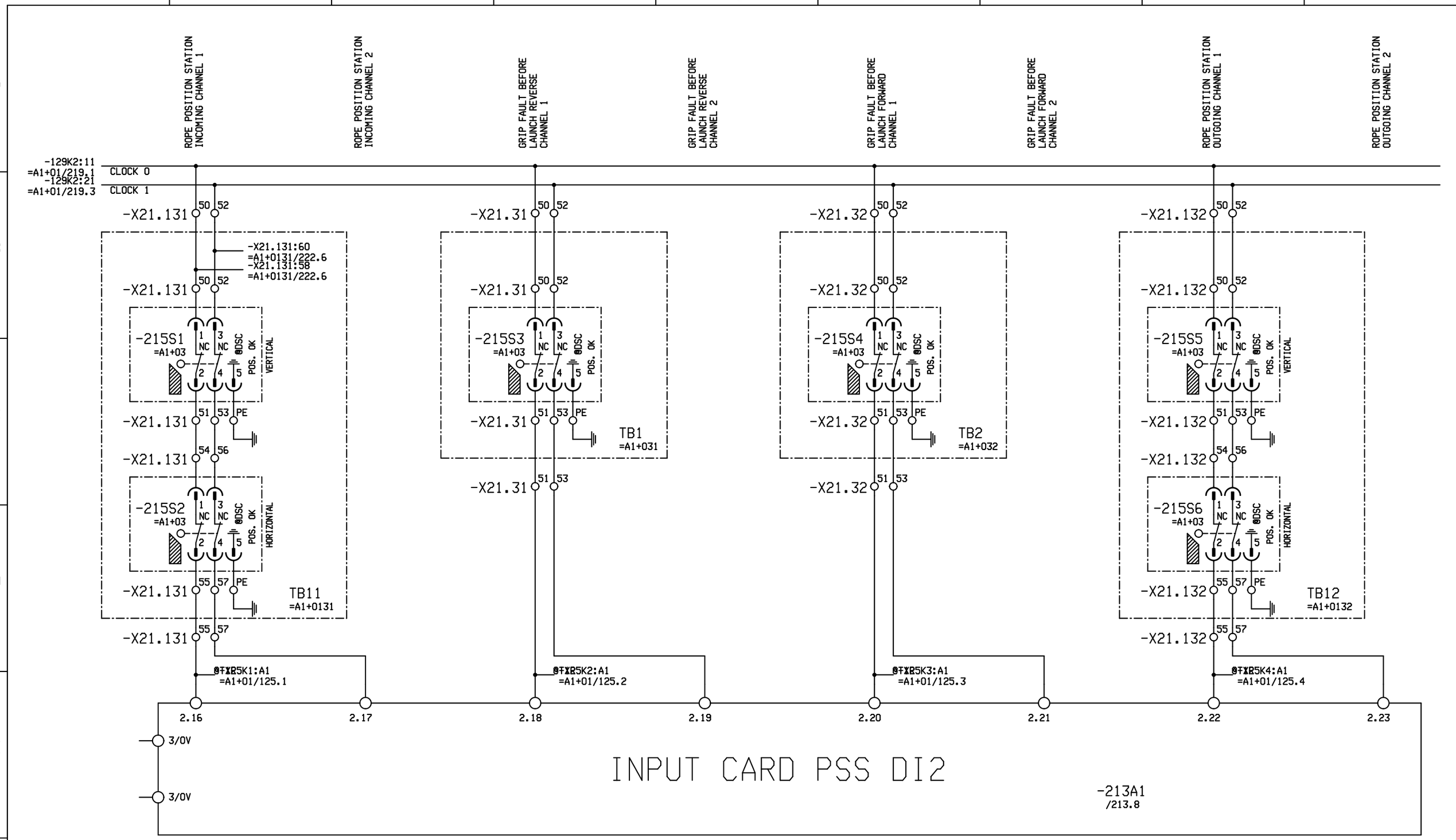

Revision	2.0	Drawn by	SST
Date	19.01.17	Dr.ch.by	FMa

File: ANWAA4185

10-MGD BaNa4
WAA0004185
DANANG / VIETNAM

Doppelmayr ®
Innova Patent GmbH
A-6960 WOLFURT / AUSTRIA

INPUT PLC (FS)

DRIVE STATION | LV-CONTROL

=A1+01

Date	18.10.16
Sheet :	215
Cont.sheet:	216

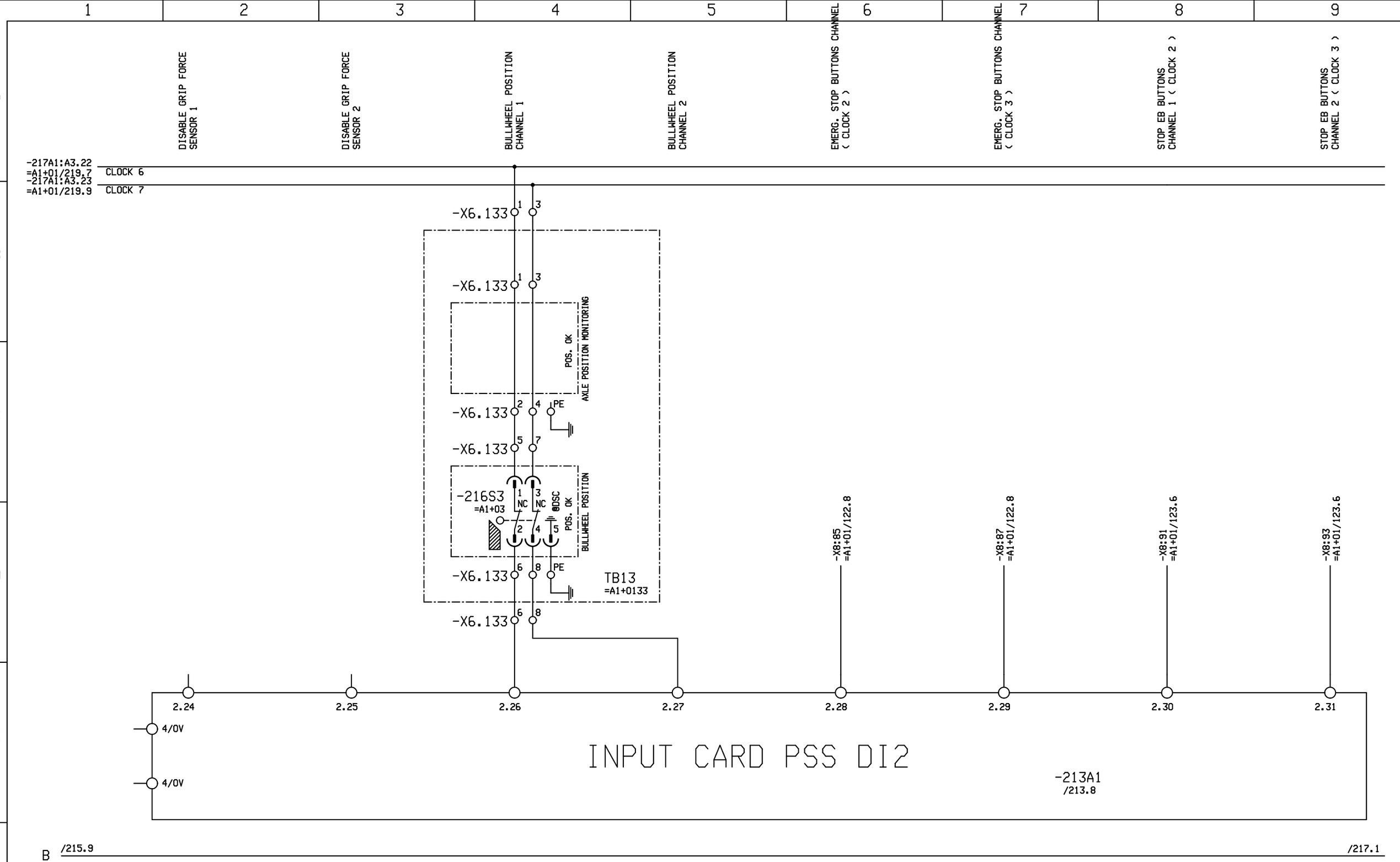

Revision	2.0	Drawn by	SST
Date	19.01.17	Dr.ch.by	FMa
File:	ANWAA4185		

10-MGD BaNa4
WAA0004185
DANANG / VIETNAM

Doppelmayr ®
Innova Patent GmbH
A-6960 WOLFURT / AUSTRIA

INPUT PLC (FS)

DRIVE STATION | LV-CONTROL

=A1+01

Date	18.10.16
Sheet :	216
Cont.sheet:	217

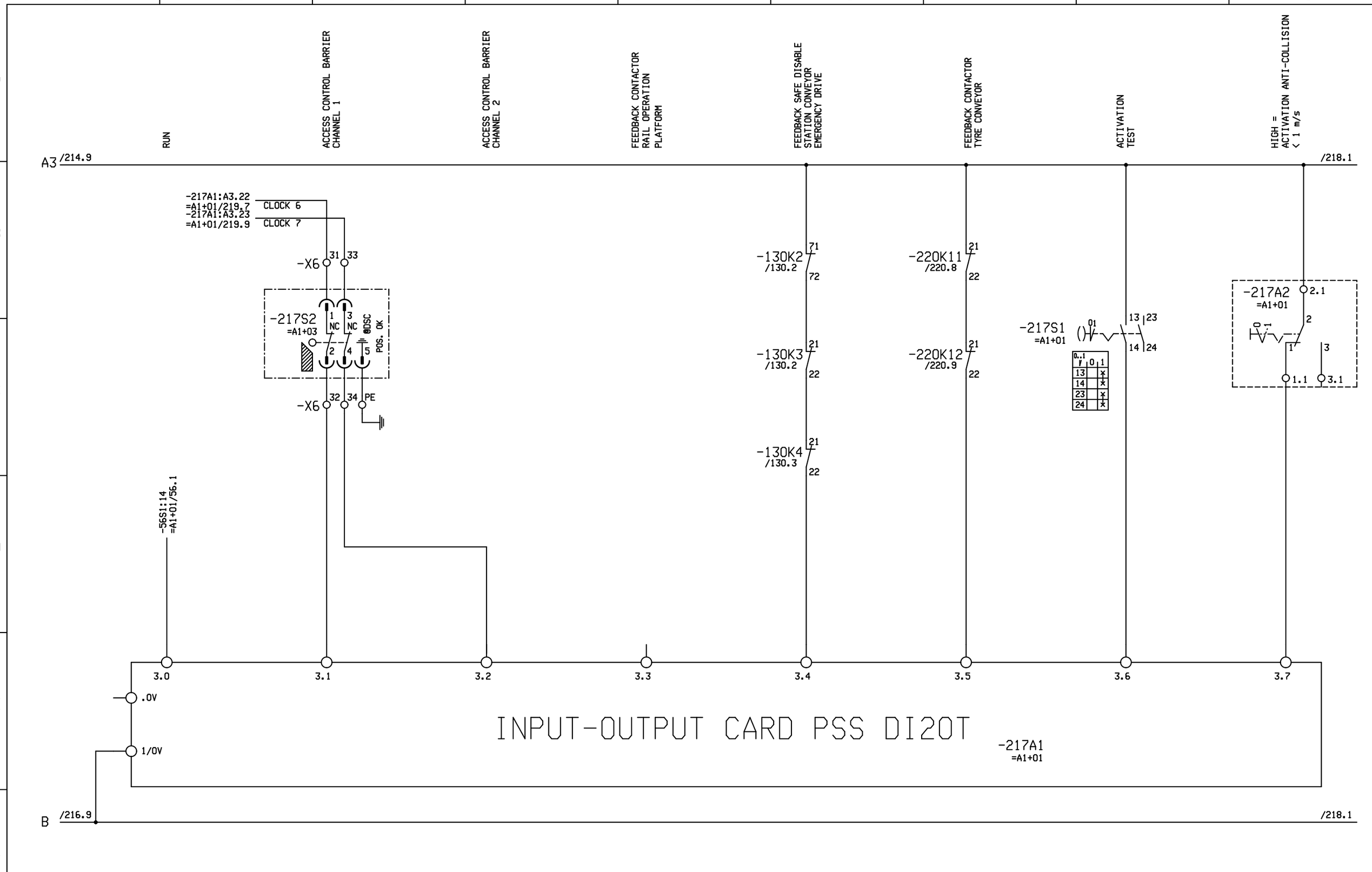

Revision	2.0	Drawn by	SST
Date	19.01.17	Dr.ch.by	FMa
File:	ANWAA4185		

10-MGD BaNa4
WAA0004185
DANANG / VIETNAM

Doppelmayr ®
Innova Patent GmbH
A-6960 WOLFURT / AUSTRIA

INPUT PLC (FS)

DRIVE STATION | LV-CONTROL

=A1+01

Date	18.10.16
Sheet :	217
Cont.sheet:	218

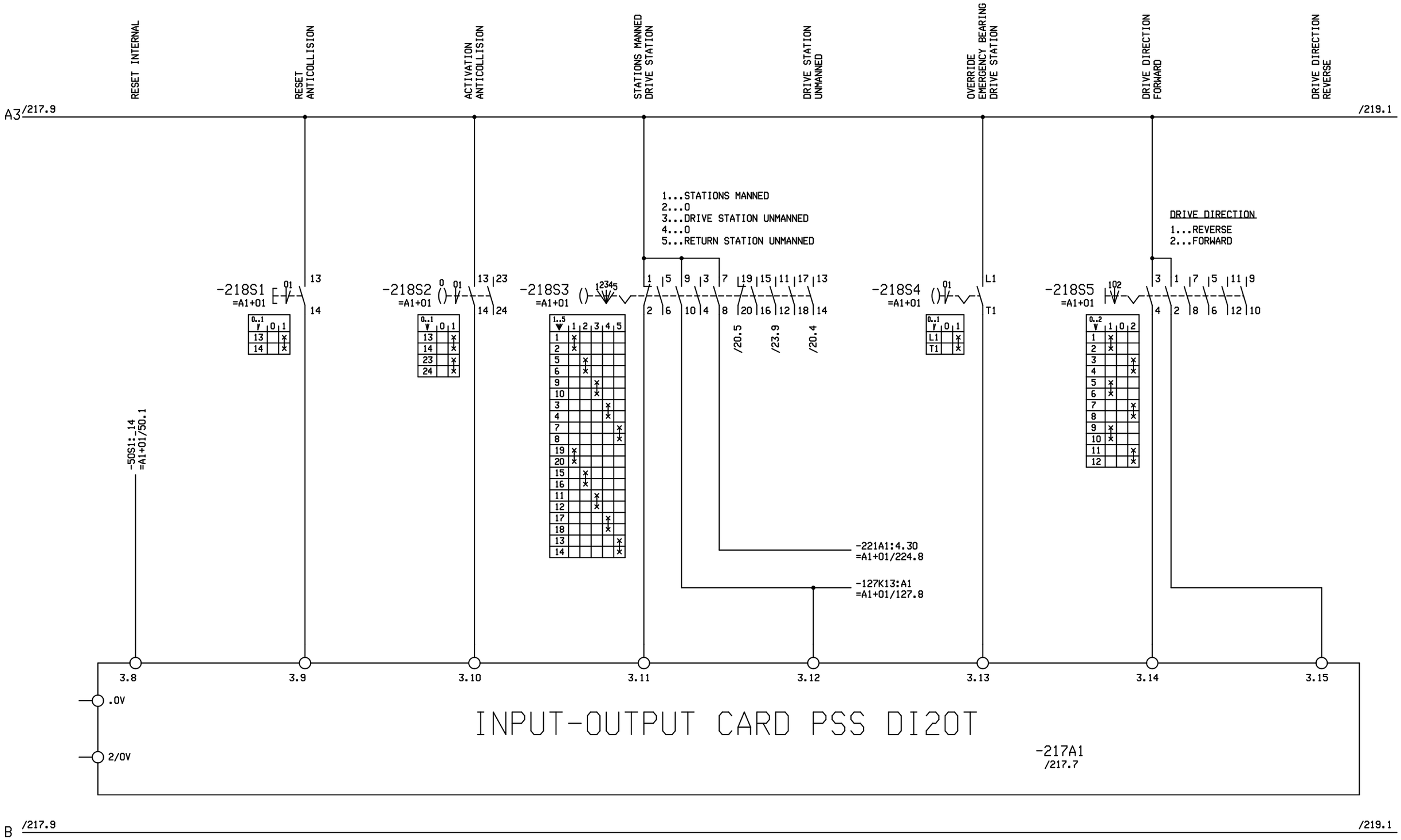

Revision	2.0	Drawn by	SST
Date	19.01.17	Dr.ch.by	FMa
File:	ANWAA4185		

10-MGD BaNa4
WAA0004185
DANANG / VIETNAM

Doppelmayr ®
Innova Patent GmbH
A-6960 WOLFURT / AUSTRIA

INPUT PLC (FS)

DRIVE STATION | LV-CONTROL

=A1+01

Date	26.07.16
Sheet :	218
Cont.sheet:	219

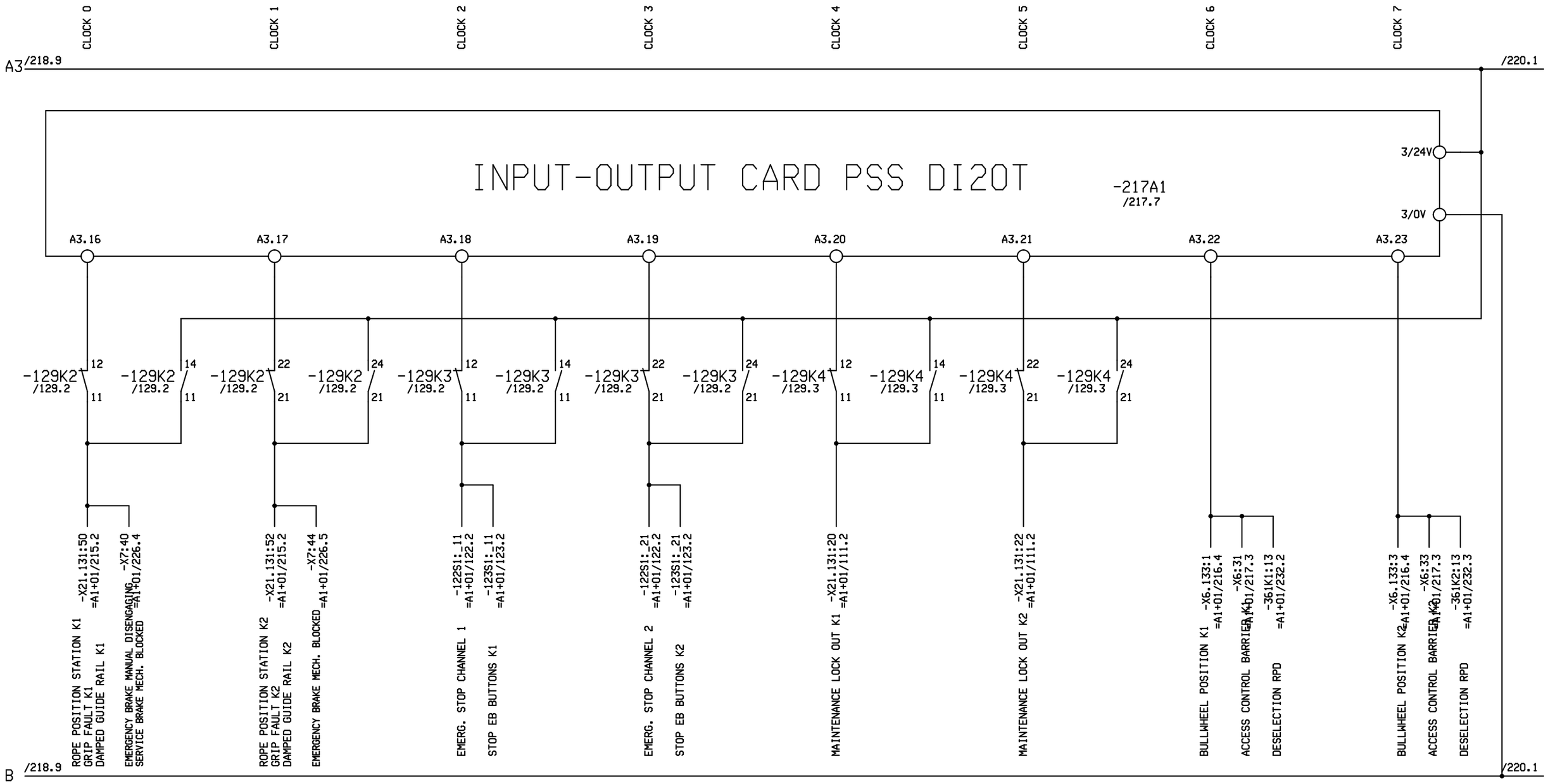

Revision	2.0	Drawn by	SST
Date	19.01.17	Dr.ch.by	FMa
File:	ANWAA4185		

10-MGD BaNa4
WAA0004185
DANANG / VIETNAM

Doppelmayr ®
Innova Patent GmbH
A-6960 WOLFURT / AUSTRIA

OUTPUT PLC (FS)

DRIVE STATION | LV-CONTROL

=A1+01

Date	18.10.16
Sheet :	219
Cont.sheet:	220

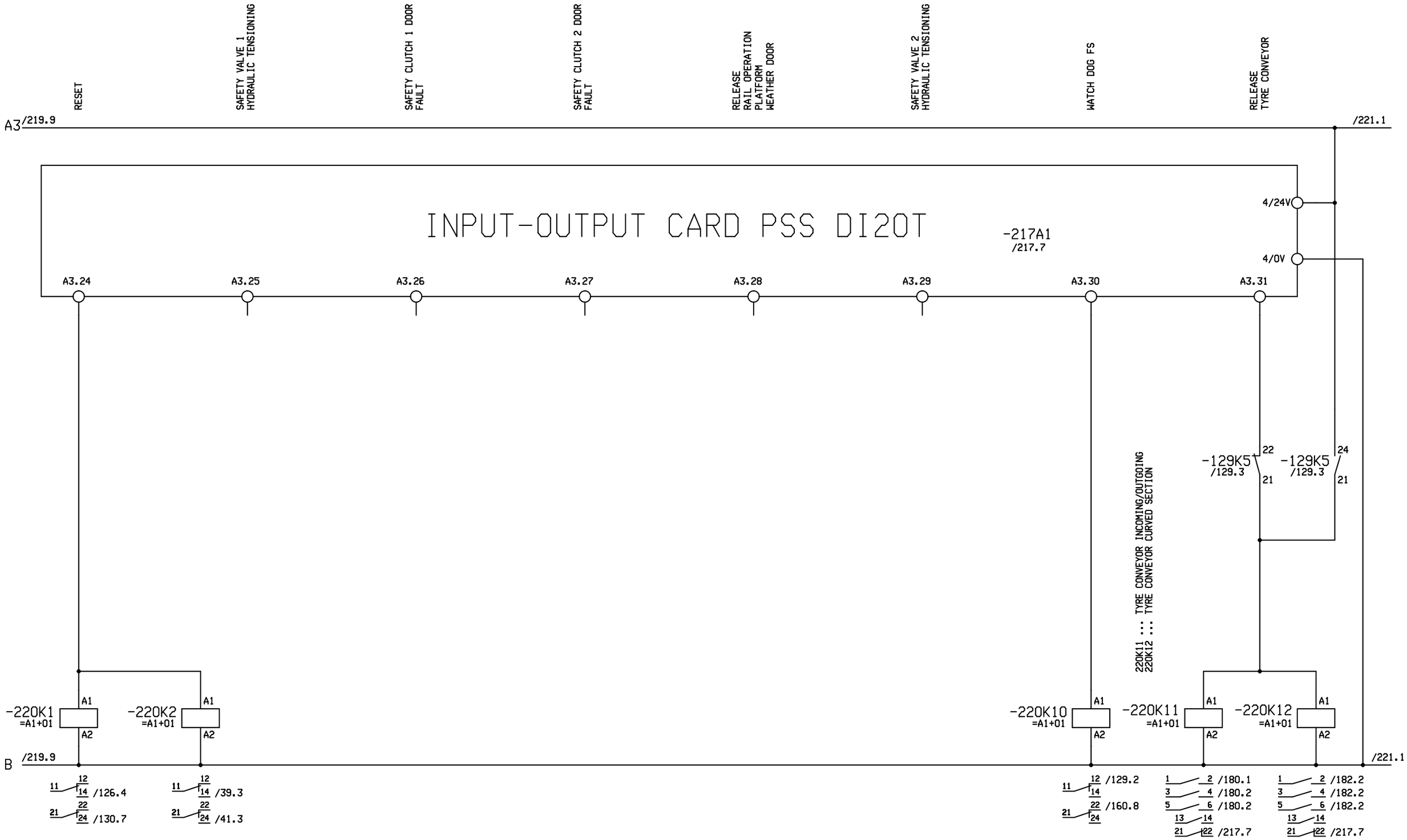

Revision	2.0	Drawn by	SST
Date	19.01.17	Dr.ch.by	FMa

File: ANWAA4185

10-MGD BaNa4
WAA0004185
DANANG / VIETNAM

Doppelmayr ®
Innova Patent GmbH
A-6960 WOLFURT / AUSTRIA

OUTPUT PLC (FS)

DRIVE STATION | LV-CONTROL

=A1+01

Date	11.05.17
Sheet :	220
Cont.sheet:	221

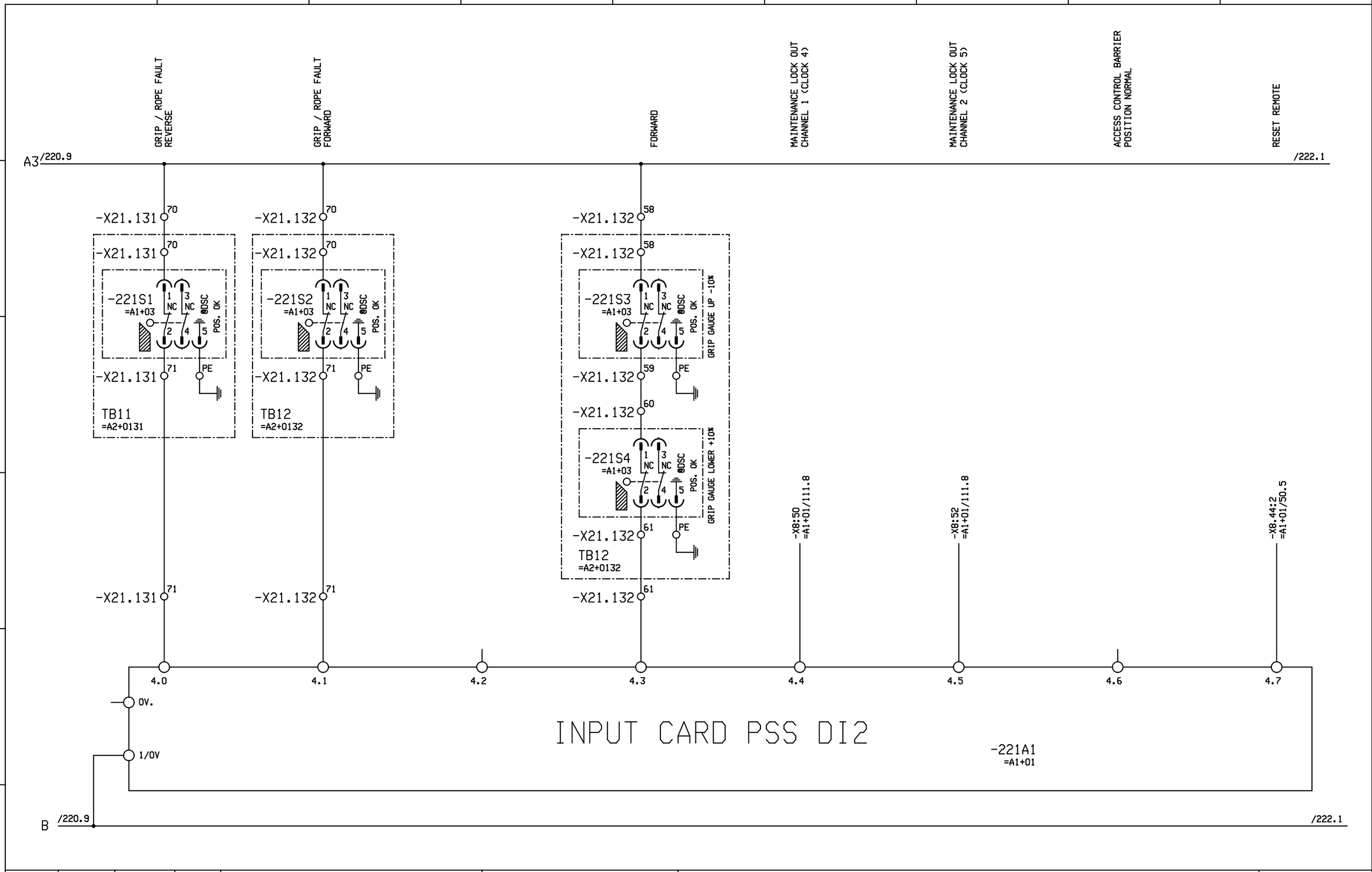

Revision	2.0	Drawn by	SST
Date	19.01.17	Dr.ch.by	FMa
File:	ANWAA4185		

10-MGD BaNa4
WAA0004185
DANANG / VIETNAM

Doppelmayr ®
Innova Patent GmbH
A-6960 WOLFURT / AUSTRIA

INPUT PLC (FS)

DRIVE STATION | LV-CONTROL

=A1+01

Date	11.05.17
Sheet :	221
Cont.sheet:	222

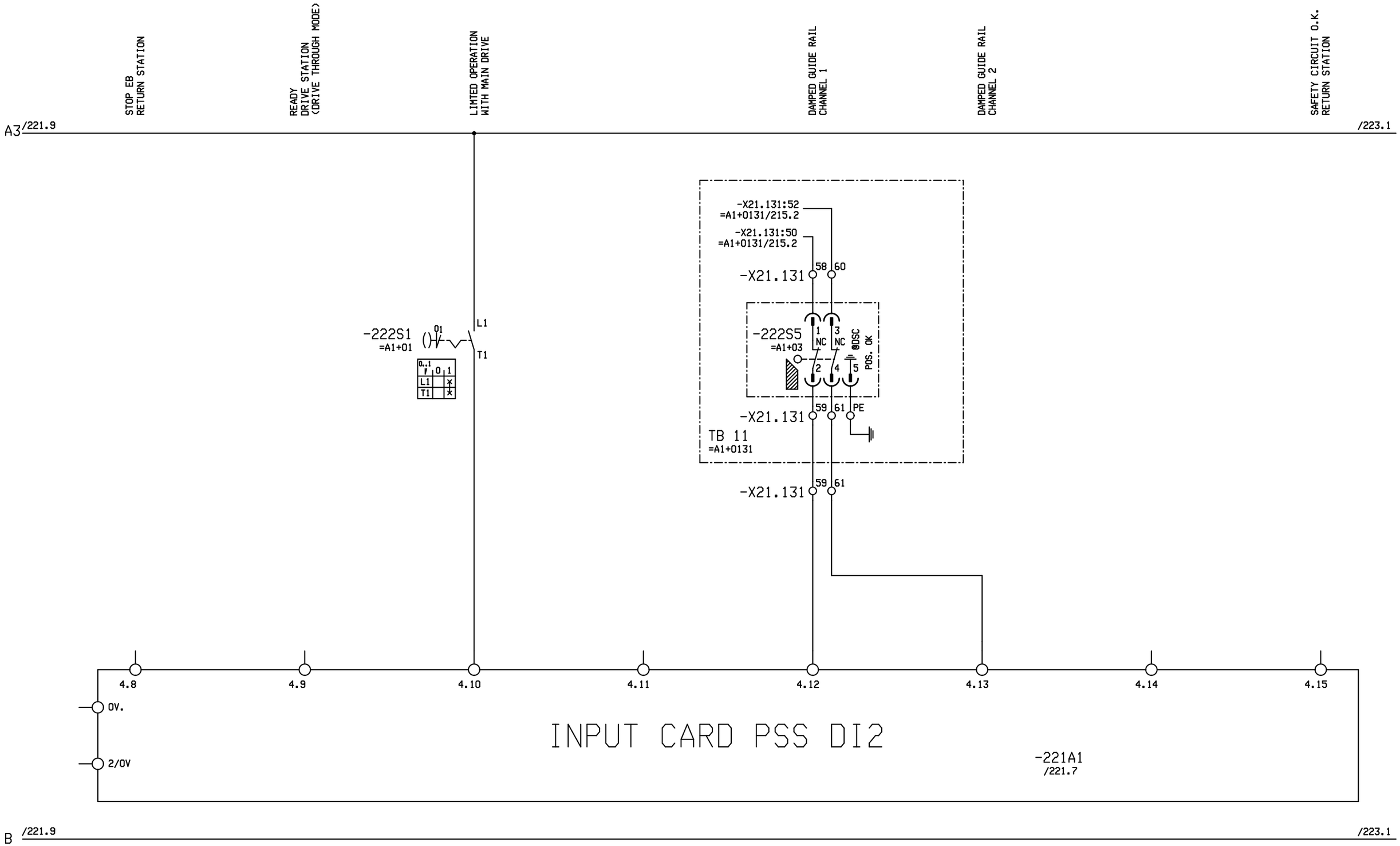

Revision	2.0	Drawn by	SST
Date	19.01.17	Dr.ch.by	FMa
File:	ANWAA4185		

10-MGD BaNa4
WAA0004185
DANANG / VIETNAM

Doppelmayr ®
Innova Patent GmbH
A-6960 WOLFURT / AUSTRIA

INPUT PLC (FS)

DRIVE STATION | LV-CONTROL

=A1+01

Date	18.10.16
Sheet :	222
Cont.sheet:	223

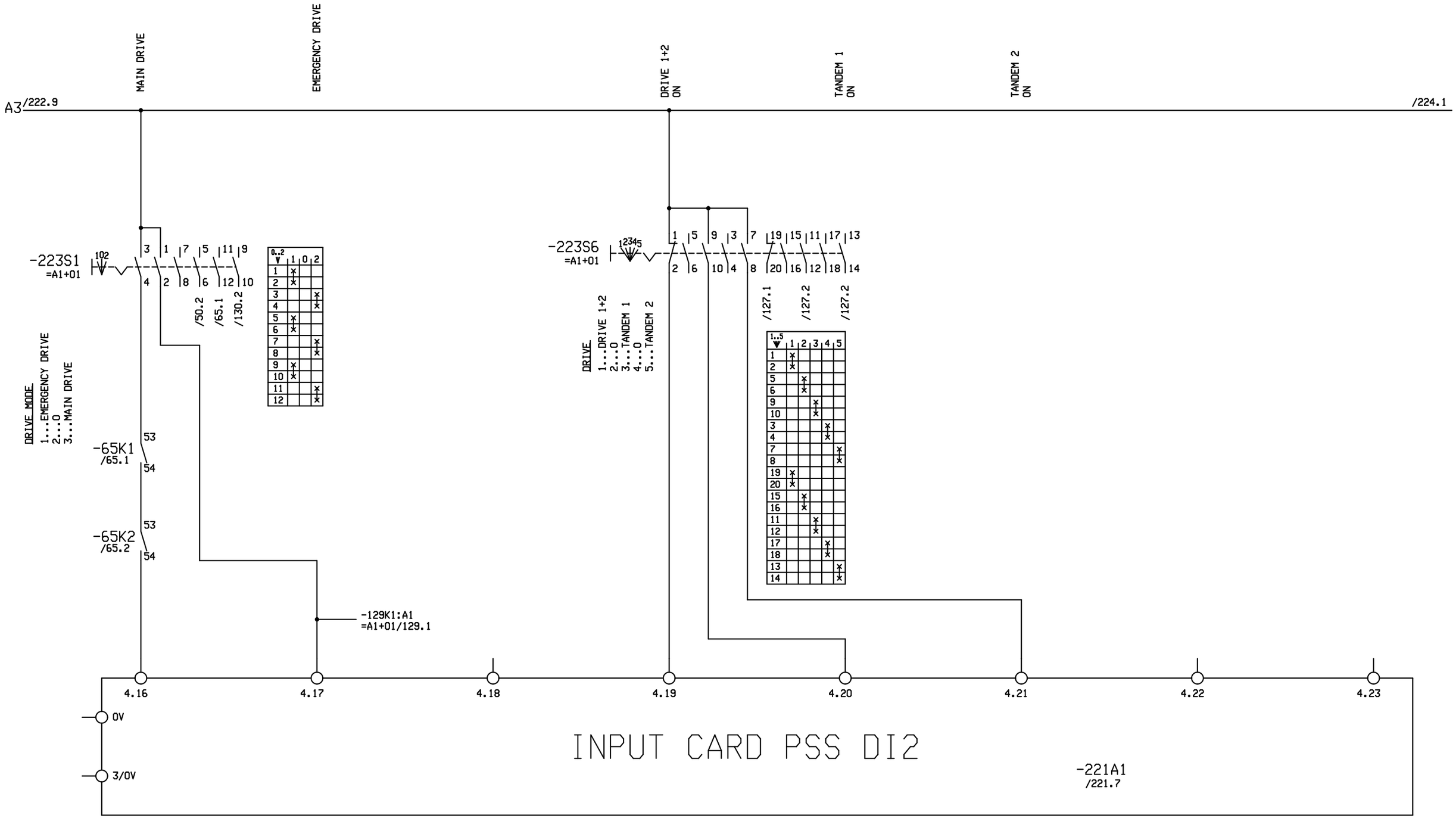

Revision	2.0	Drawn by	SST
Date	19.01.17	Dr.ch.by	FMa

File: ANWAA4185

10-MGD BaNa4
WAA0004185
DANANG / VIETNAM

Doppelmayr ®
Innova Patent GmbH
A-6960 WOLFURT / AUSTRIA

INPUT PLC (FS)

DRIVE STATION | LV-CONTROL

=A1+01

Date	21.03.17
Sheet :	223
Cont.sheet:	224

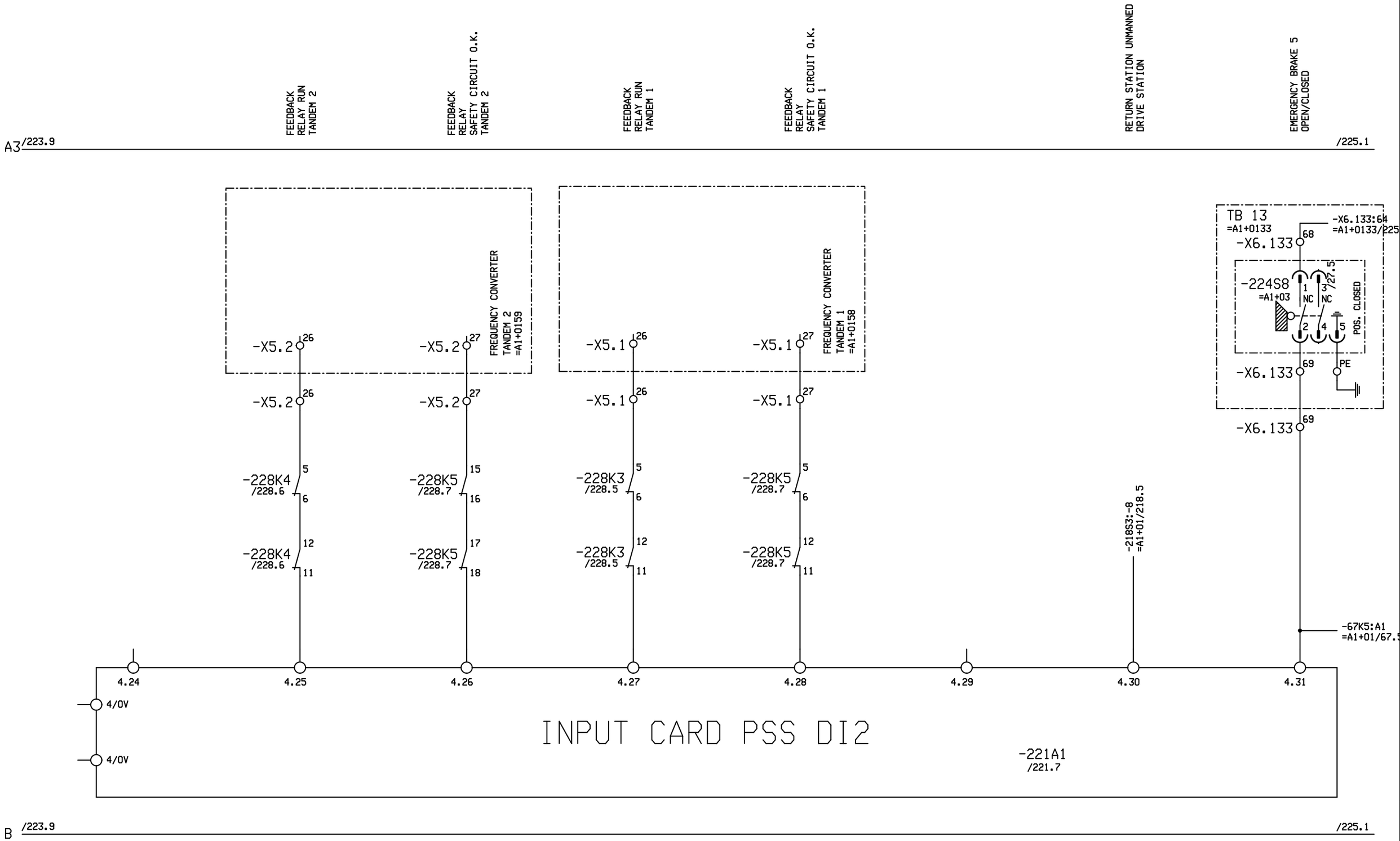

Revision	2.0	Drawn by	SST
Date	19.01.17	Dr.ch.by	FMa
File:	ANWAA4185		

10-MGD BaNa4
WAA0004185
DANANG / VIETNAM

Doppelmayr ®
Innova Patent GmbH
A-6960 WOLFURT / AUSTRIA

INPUT PLC (FS)

DRIVE STATION | LV-CONTROL

=A1+01

Date	19.01.17
Sheet :	224
Cont.sheet:	225

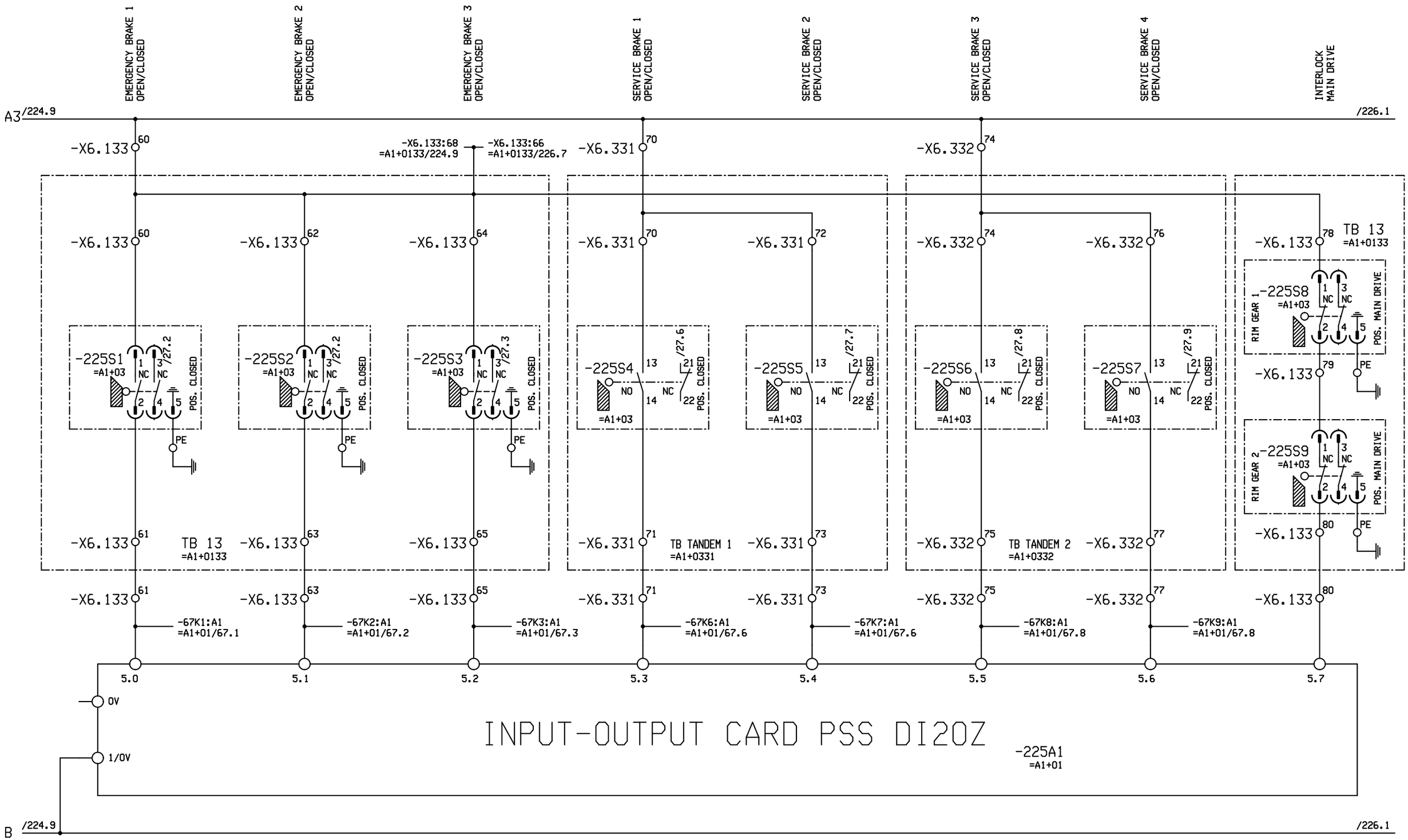

Revision	2.0	Drawn by	SST
Date	19.01.17	Dr.ch.by	FMa
File:	ANWAA4185		

10-MGD BaNa4
WAA0004185
DANANG / VIETNAM

Doppelmayr ®
Innova Patent GmbH
A-6960 WOLFURT / AUSTRIA

INPUT PLC (FS)

DRIVE STATION | LV-CONTROL

=A1+01

Date	19.01.17
Sheet :	225
Cont.sheet:	226

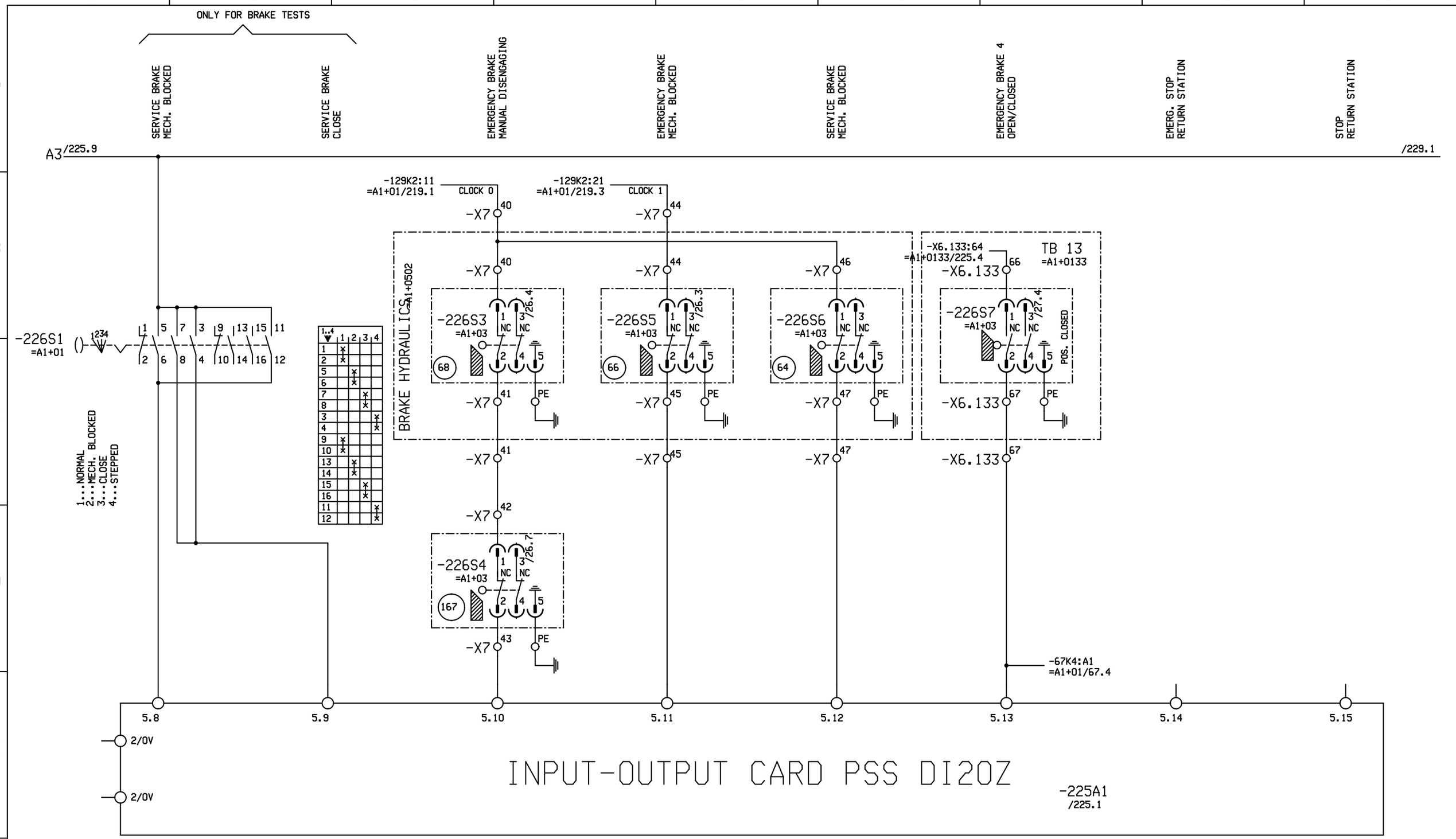

Revision	2.0	Drawn by	SST	10-MGD BaNa4	Doppelmayr ®	INPUT PLC (FS)	=A1+01
Date	19.01.17	Dr.ch.by	FMa	WAA0004185	Innova Patent GmbH		Date 20.01.17
File:	ANWAA4185			DANANG / VIETNAM	A-6960 WOLFURT / AUSTRIA	DRIVE STATION / LV-CONTROL	Sheet : 226
							Cont.sheet: 227

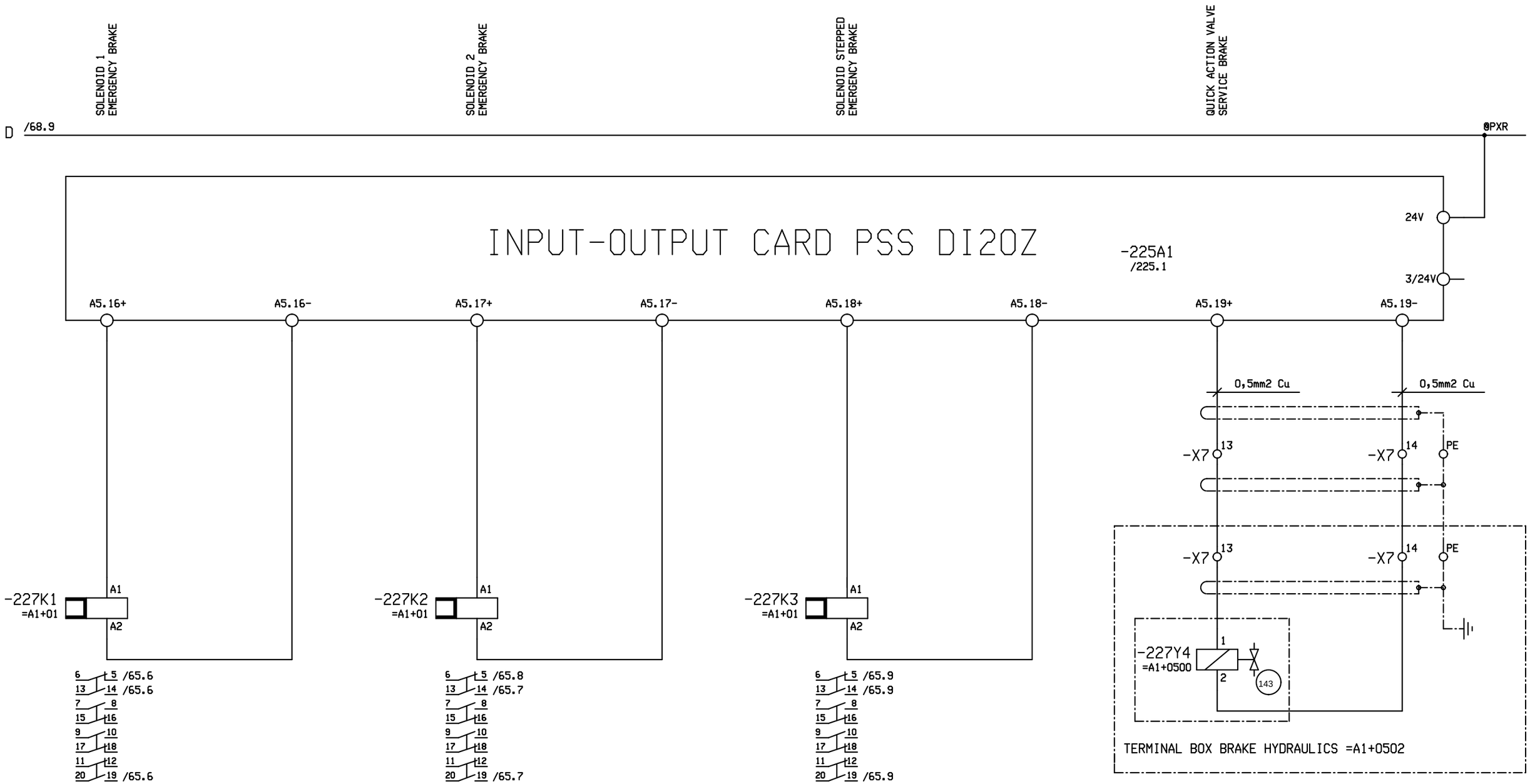

Revision	2.0	Drawn by	SST
Date	19.01.17	Dr.ch.by	FMa
File:	ANWAA4185		

10-MGD BaNa4
WAA0004185
DANANG / VIETNAM

Doppelmayr ®
Innova Patent GmbH
A-6960 WOLFURT / AUSTRIA

OUTPUT PLC (FS)

DRIVE STATION | LV-CONTROL

=A1+01

Date	20.01.17
Sheet :	227
Cont.sheet:	228

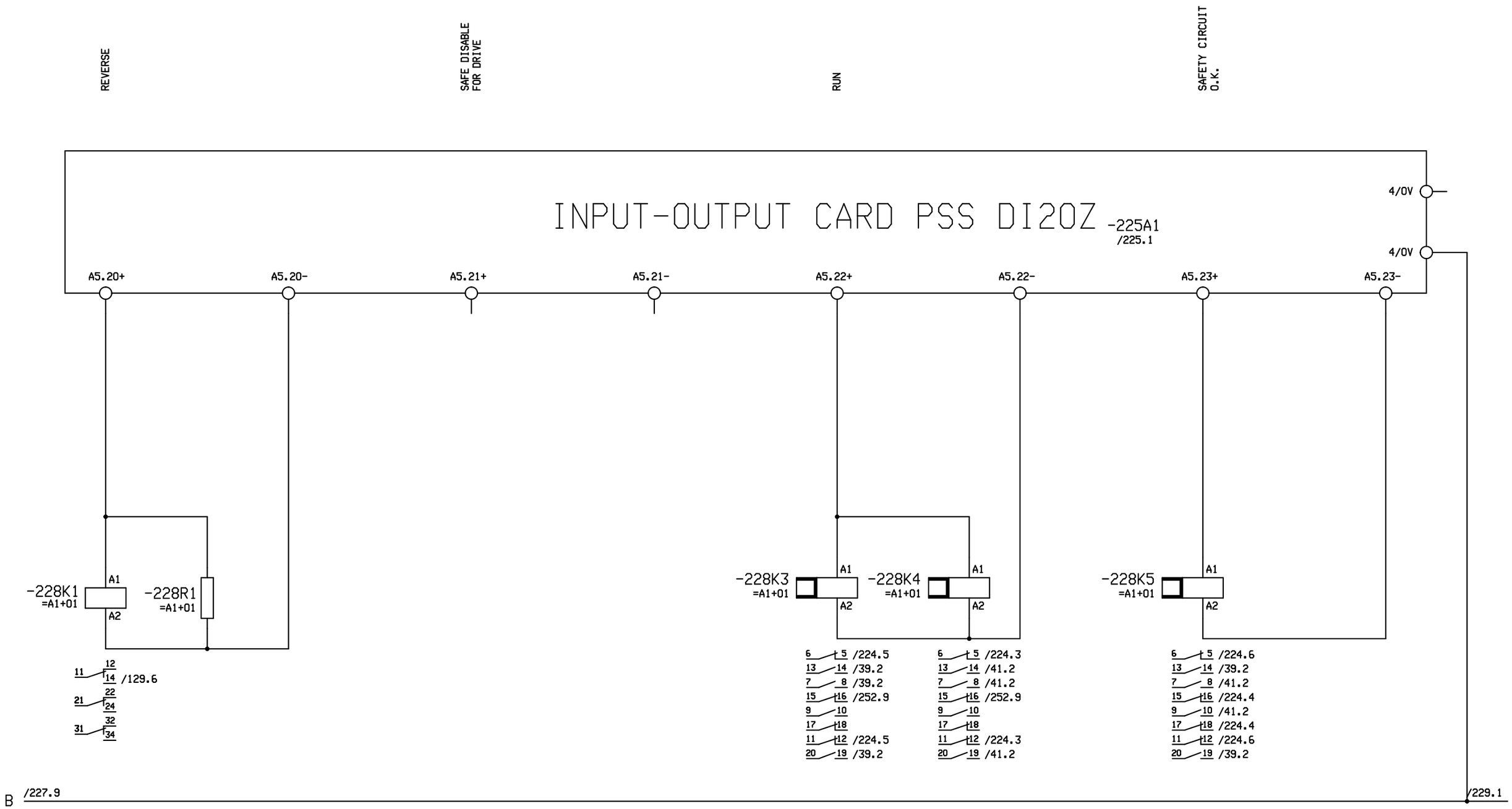

Revision	2.0	Drawn by	SST
Date	19.01.17	Dr.ch.by	FMa
File:	ANWAA4185		

10-MGD BaNa4
WAA0004185
DANANG / VIETNAM

Doppelmayr ®
Innova Patent GmbH
A-6960 WOLFURT / AUSTRIA

OUTPUT PLC (FS)

DRIVE STATION | LV-CONTROL

=A1+01

Date	20.01.17
Sheet :	228
Cont.sheet:	229

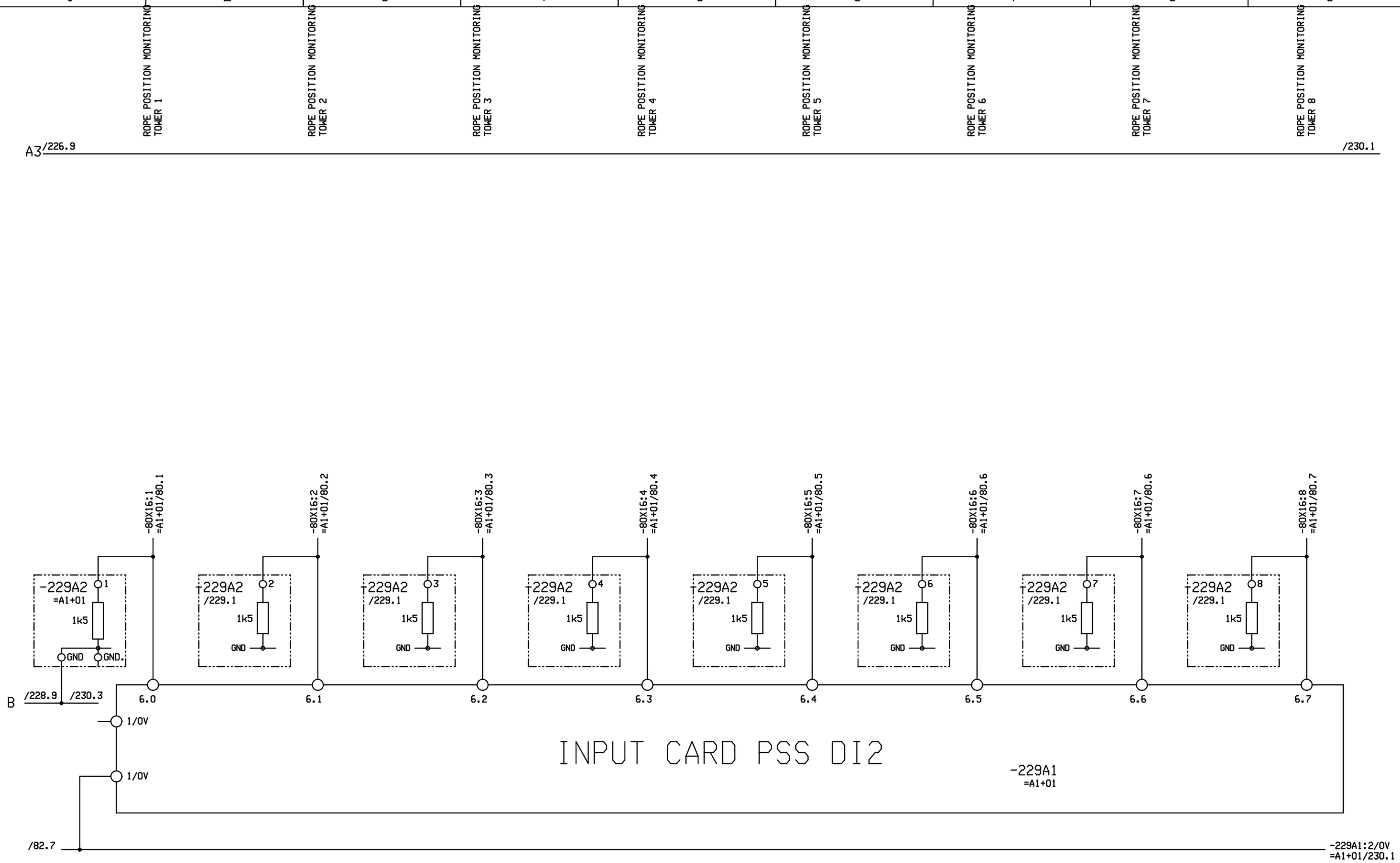

Revision	2.0	Drawn by	SST
Date	19.01.17	Dr.ch.by	FMa
File:	ANWAA4185		

10-MGD BaNa4
WAA0004185
DANANG / VIETNAM

Doppelmayr ®
Innova Patent GmbH
A-6960 WOLFURT / AUSTRIA

INPUT PLC (FS)

DRIVE STATION | LV-CONTROL

=A1+01

Date	06.06.16
Sheet :	229
Cont.sheet:	230

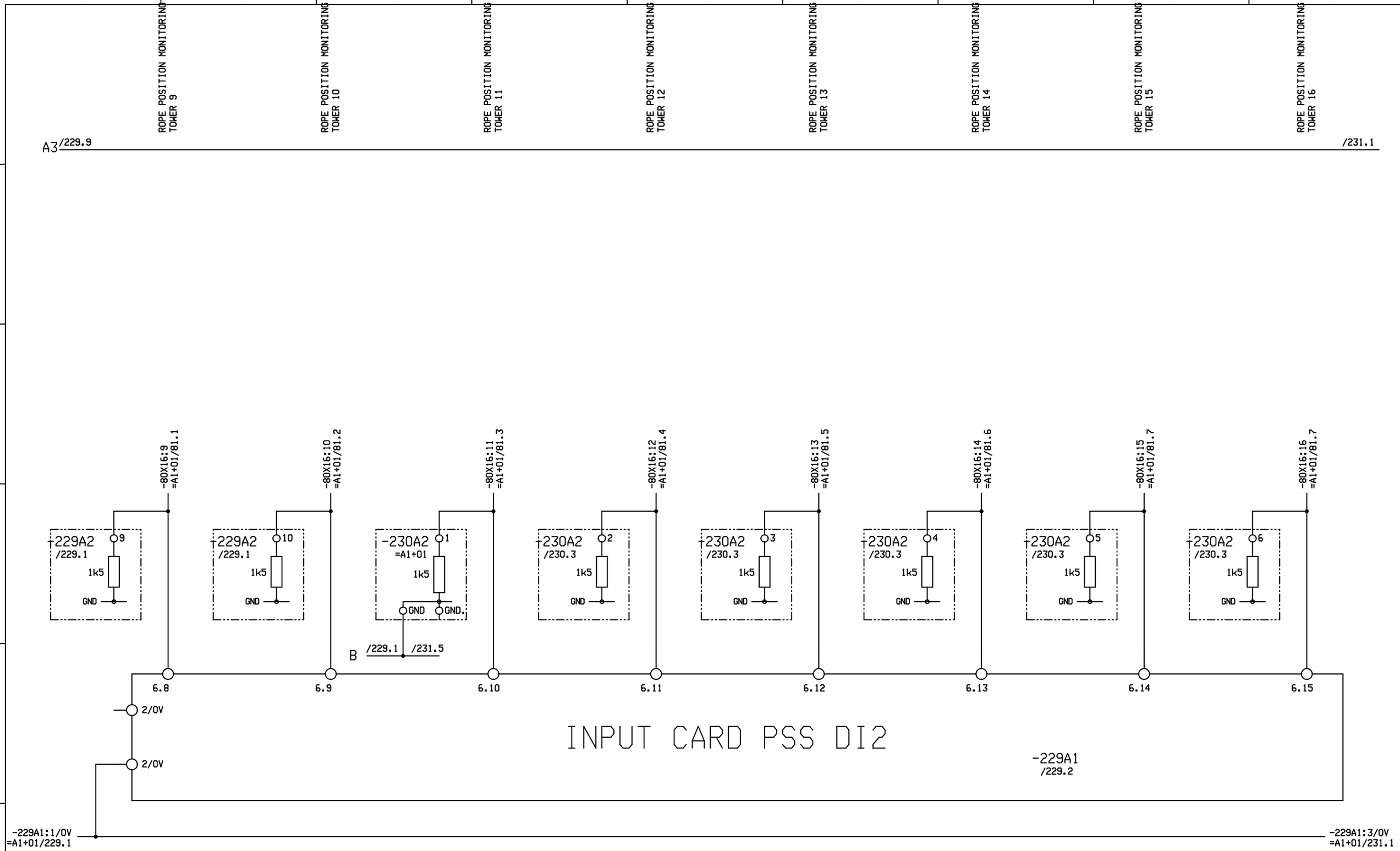

Revision	2.0	Drawn by	SST
Date	19.01.17	Dr.ch.by	FMa
File:	ANWAA4185		

10-MGD BaNa4
WAA0004185
DANANG / VIETNAM

Doppelmayr ®
Innova Patent GmbH
A-6960 WOLFURT / AUSTRIA

INPUT PLC (FS)

DRIVE STATION | LV-CONTROL

=A1+01

Date	06.06.16
Sheet :	230
Cont.sheet:	231

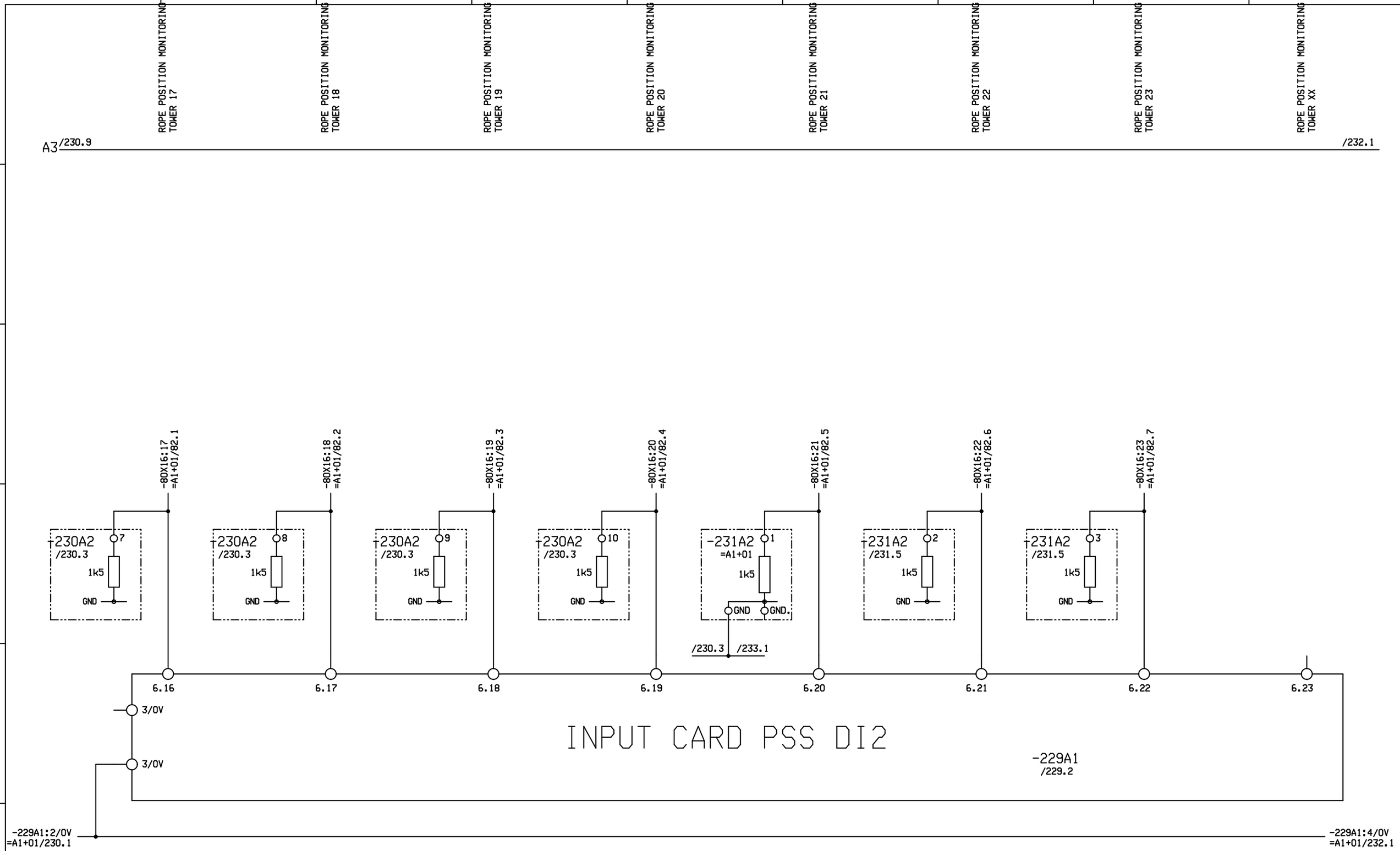

Revision	2.0	Drawn by	SST
Date	19.01.17	Dr.ch.by	FMa

File: ANWAA4185

10-MGD BaNa4
WAA0004185
DANANG / VIETNAM

Doppelmayr ®
Innova Patent GmbH
A-6960 WOLFURT / AUSTRIA

INPUT PLC (FS)

DRIVE STATION | LV-CONTROL

=A1+01

Date	09.06.16
Sheet :	231
Cont.sheet:	232

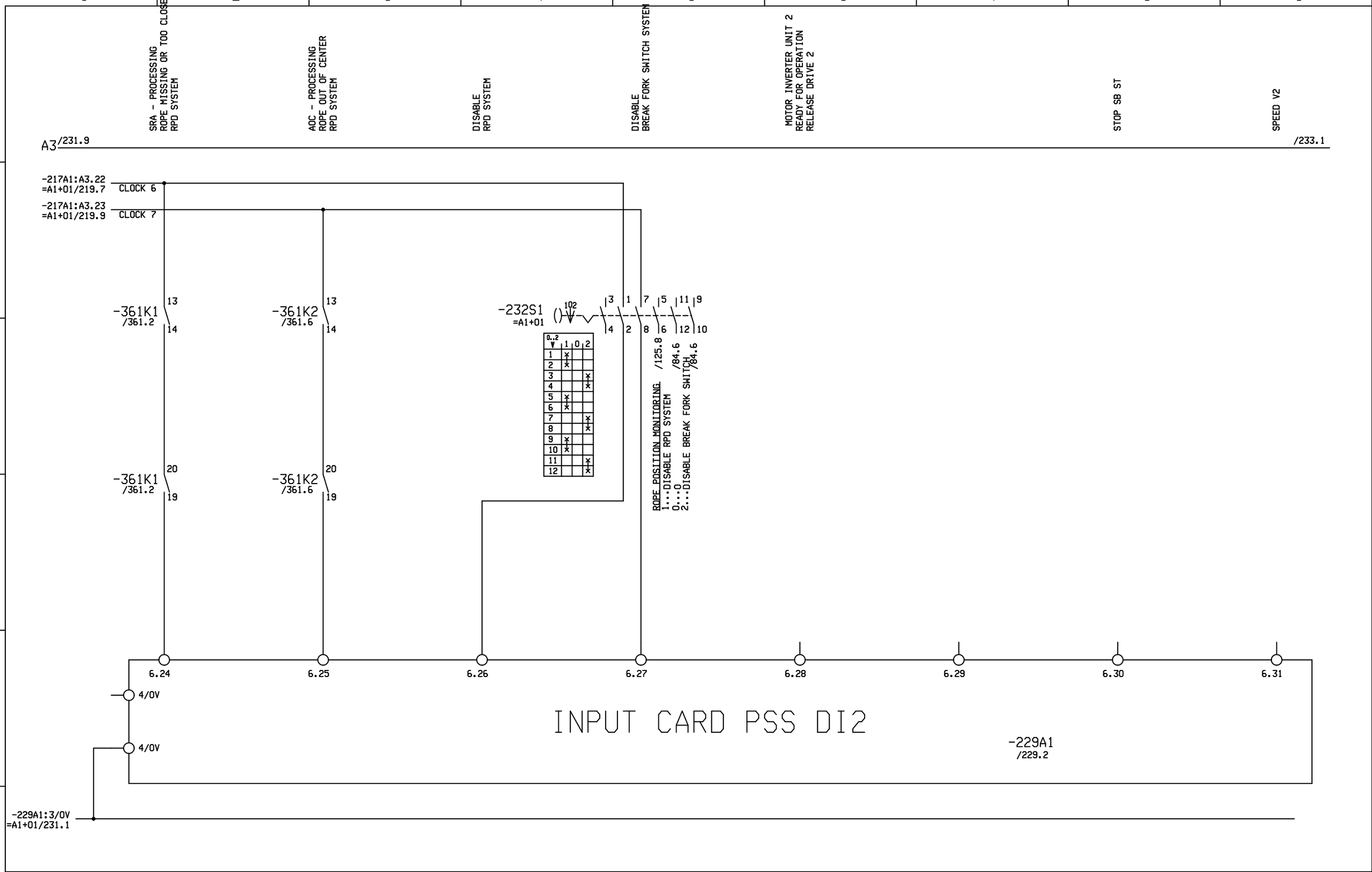

Revision	2.0	Drawn by	SST
Date	19.01.17	Dr.ch.by	FMa
File:	ANWAA4185		

10-MGD BaNa4
WAA0004185
DANANG / VIETNAM

Doppelmayr ®
Innova Patent GmbH
A-6960 WOLFURT / AUSTRIA

INPUT PLC (FS)

DRIVE STATION | LV-CONTROL

=A1+01

Date	02.06.16
Sheet :	232
Cont.sheet:	233

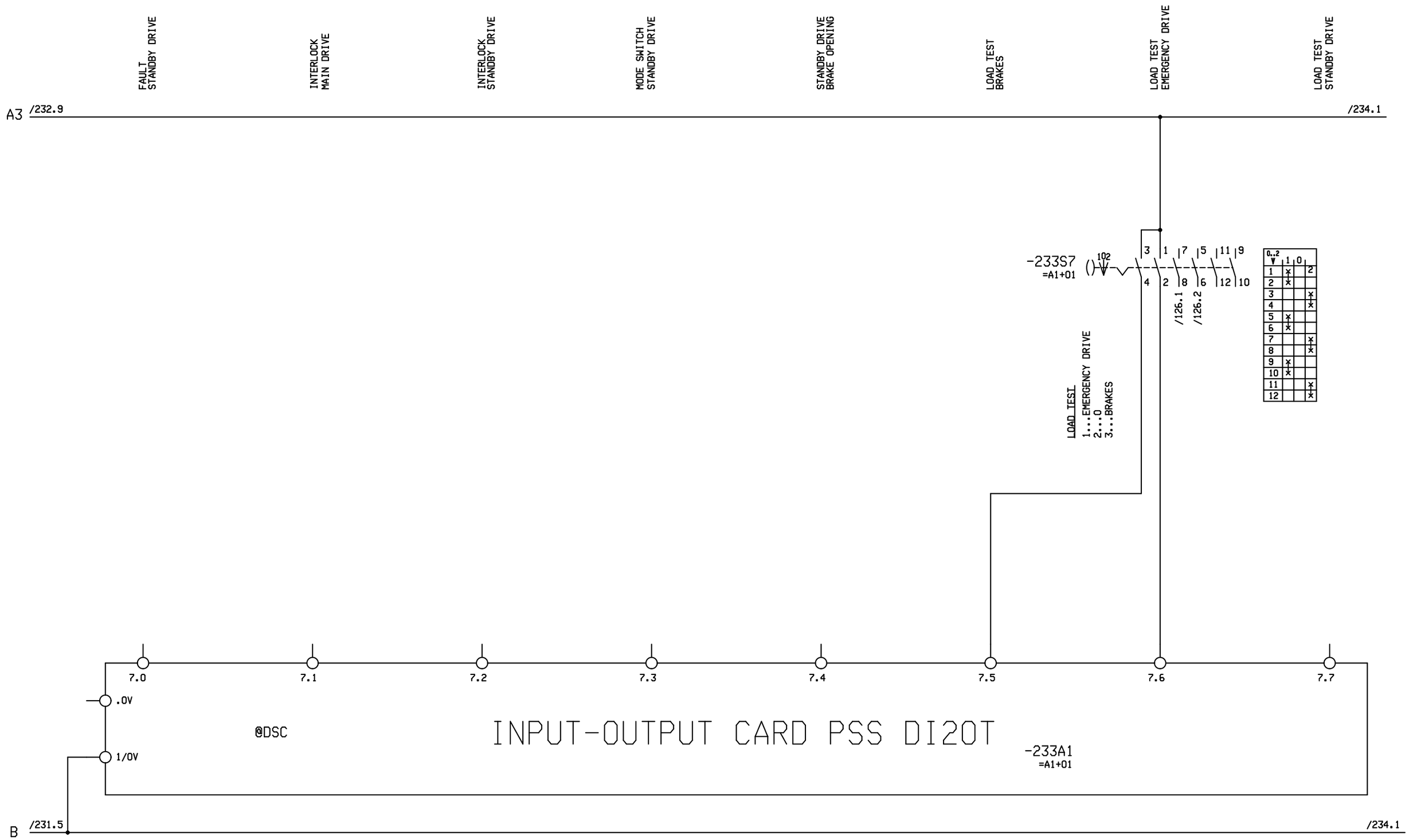

Revision	2.0	Drawn by	SST
Date	19.01.17	Dr.ch.by	FMa
File:	ANWAA4185		

10-MGD BaNa4
WAA0004185
DANANG / VIETNAM

Doppelmayr ®
Innova Patent GmbH
A-6960 WOLFURT / AUSTRIA

INPUT PLC (FS)

DRIVE STATION | LV-CONTROL

=A1+01

Date	19.01.17
Sheet :	233
Cont.sheet:	234

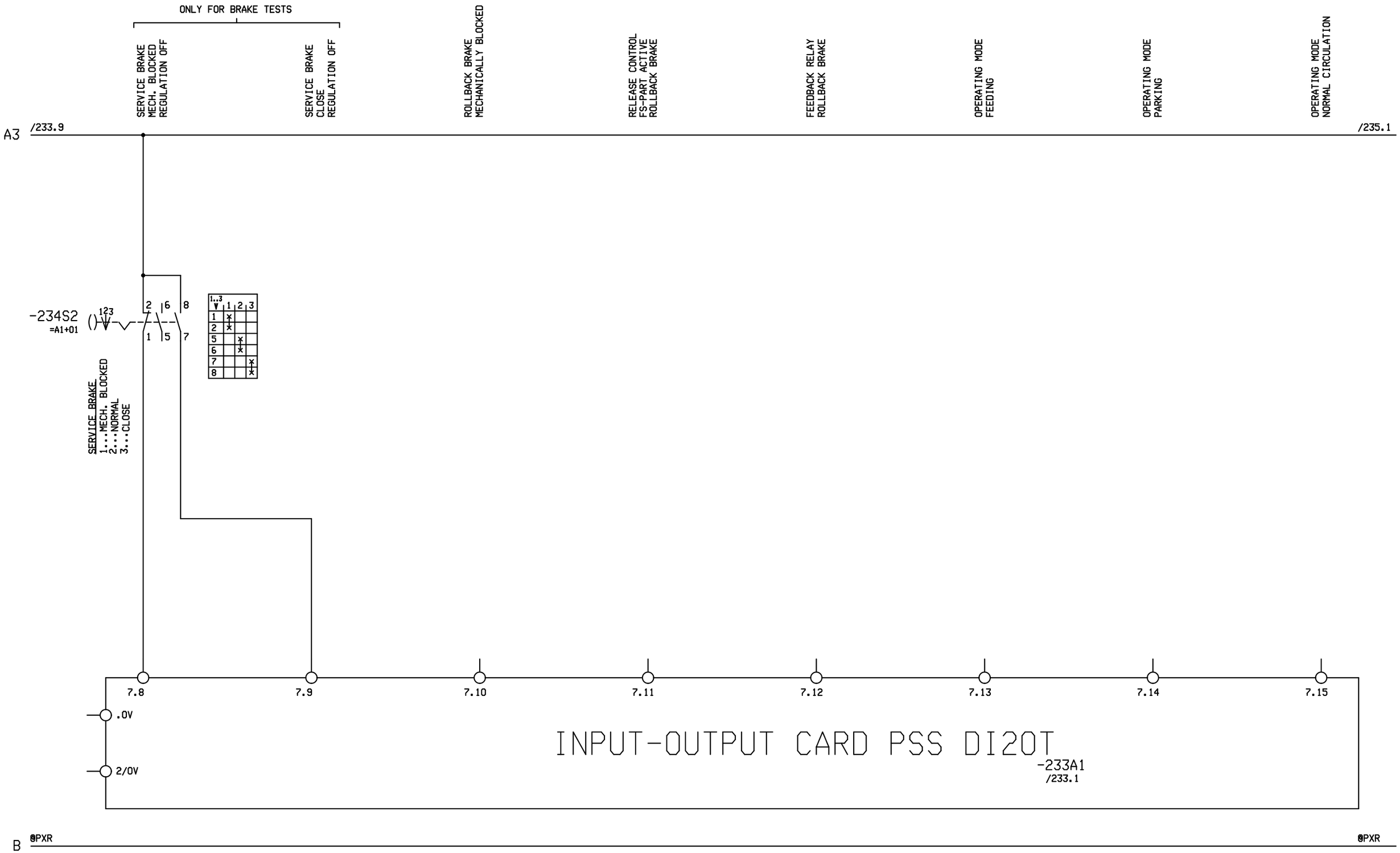

Revision	2.0	Drawn by	SST
Date	19.01.17	Dr.ch.by	FMa

File: ANWAA4185

10-MGD BaNa4
WAA0004185
DANANG / VIETNAM

Doppelmayr ®
Innova Patent GmbH
A-6960 WOLFURT / AUSTRIA

OUTPUT PLC (FS)

DRIVE STATION | LV-CONTROL

=A1+01

Date	23.01.17
Sheet :	234
Cont.sheet:	235

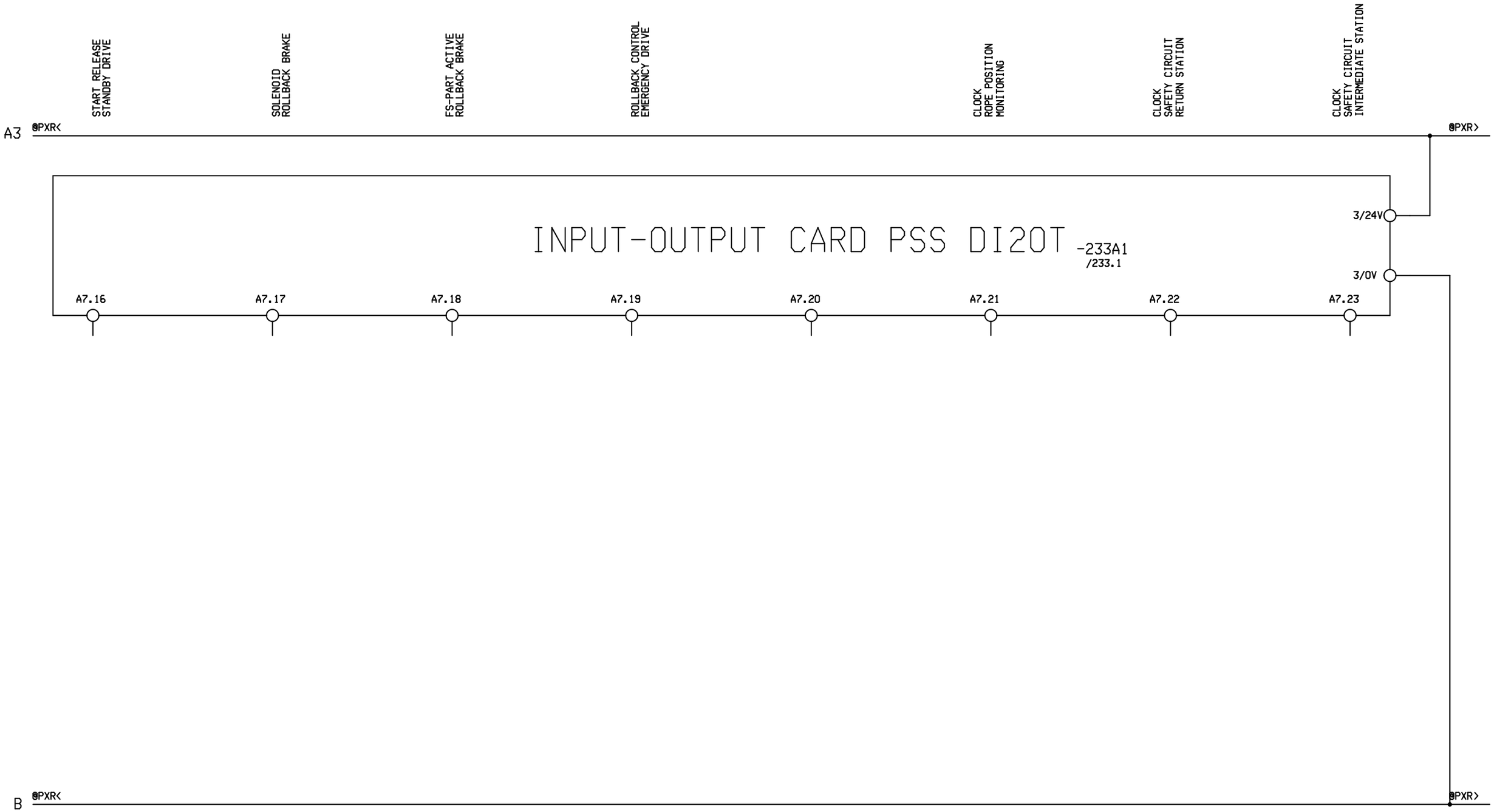

Revision	2.0	Drawn by	SST
Date	19.01.17	Dr.ch.by	FMa
File:	ANWAA4185		

10-MGD BaNa4
WAA0004185
DANANG / VIETNAM

Doppelmayr ®
Innova Patent GmbH
A-6960 WOLFURT / AUSTRIA

INPUT PLC (FS)

DRIVE STATION | LV-CONTROL

=A1+01

Date	09.06.16
Sheet :	235
Cont.sheet:	236

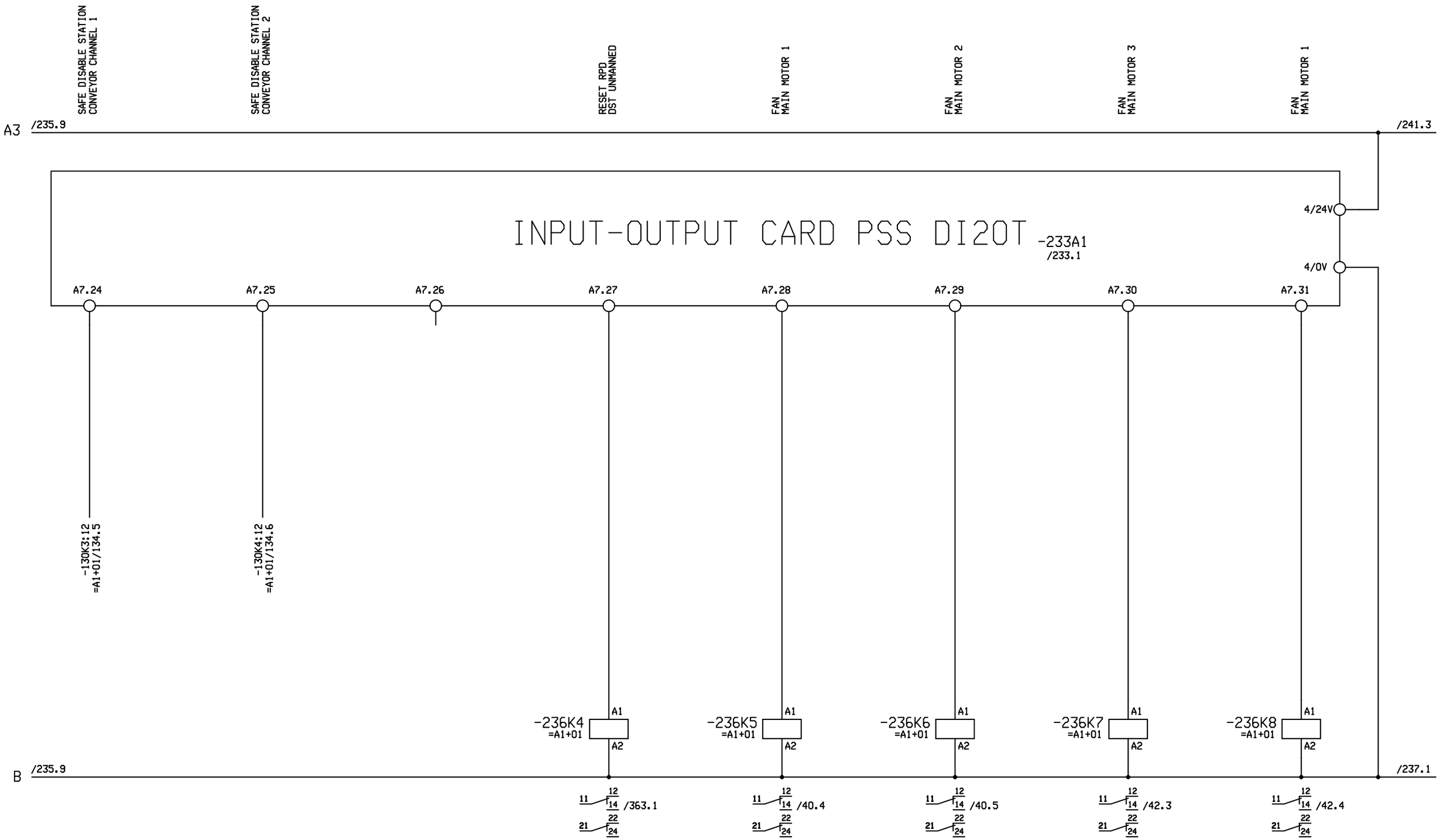

Revision	2.0	Drawn by	SST
Date	19.01.17	Dr.ch.by	FMa
File:	ANWAA4185		

10-MGD BaNa4
WAA0004185
DANANG / VIETNAM

Doppelmayr ®
Innova Patent GmbH
A-6960 WOLFURT / AUSTRIA

INPUT PLC (FS)

DRIVE STATION | LV-CONTROL

=A1+01

Date	14.06.16
Sheet :	236
Cont.sheet:	237

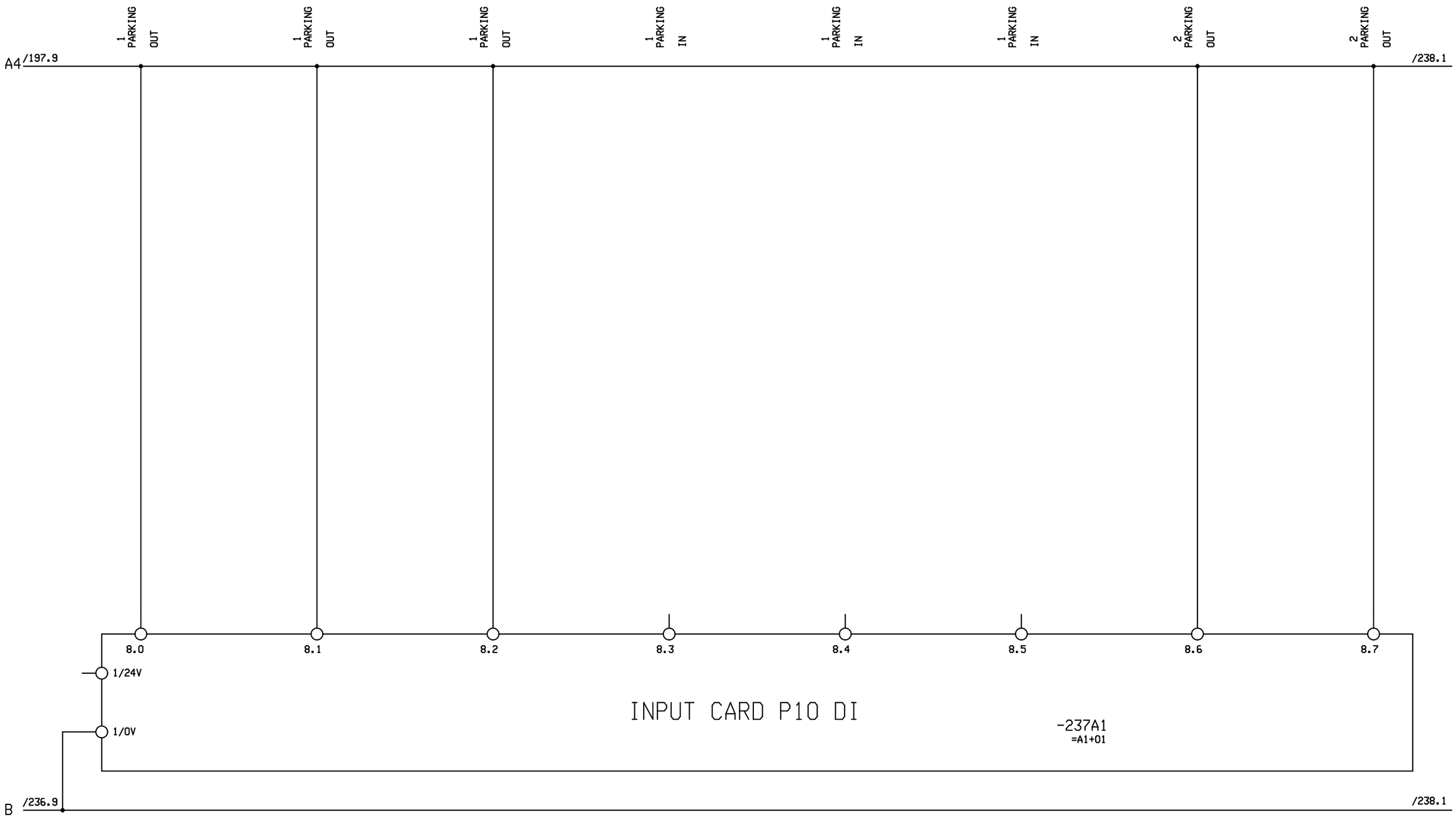

RAILS DRAWN IN POSITION OUT

Revision	2.0	Drawn by	SST
Date	19.01.17	Dr.ch.by	FMa
File:	ANWAA4185		

10-MGD BaNa4
WAA0004185
DANANG / VIETNAM

Doppelmayr ®
Innova Patent GmbH
A-6960 WOLFURT / AUSTRIA

INPUT PLC (ST)

DRIVE STATION | LV-CONTROL

=A1+01

Date	01.04.16
Sheet :	237
Cont.sheet:	238

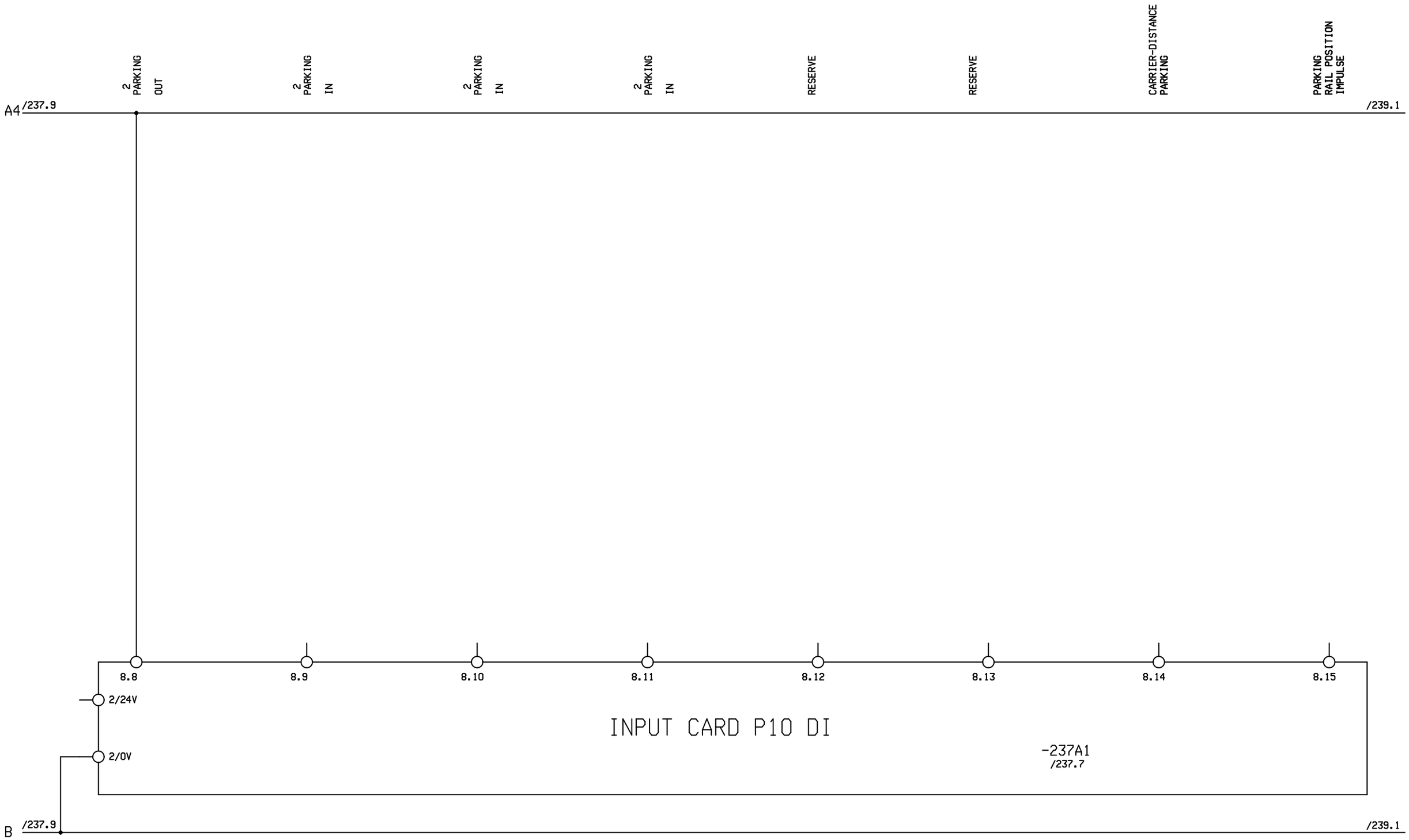

RAILS DRAWN IN POSITION OUT

Revision	2.0	Drawn by	SST
Date	19.01.17	Dr.ch.by	FMa
File:	ANWAA4185		

10-MGD BaNa4
WAA0004185
DANANG / VIETNAM

Doppelmayr ®
Innova Patent GmbH
A-6960 WOLFURT / AUSTRIA

INPUT PLC (ST)

DRIVE STATION | LV-CONTROL

=A1+01

Date	01.04.16
Sheet :	238
Cont.sheet:	239

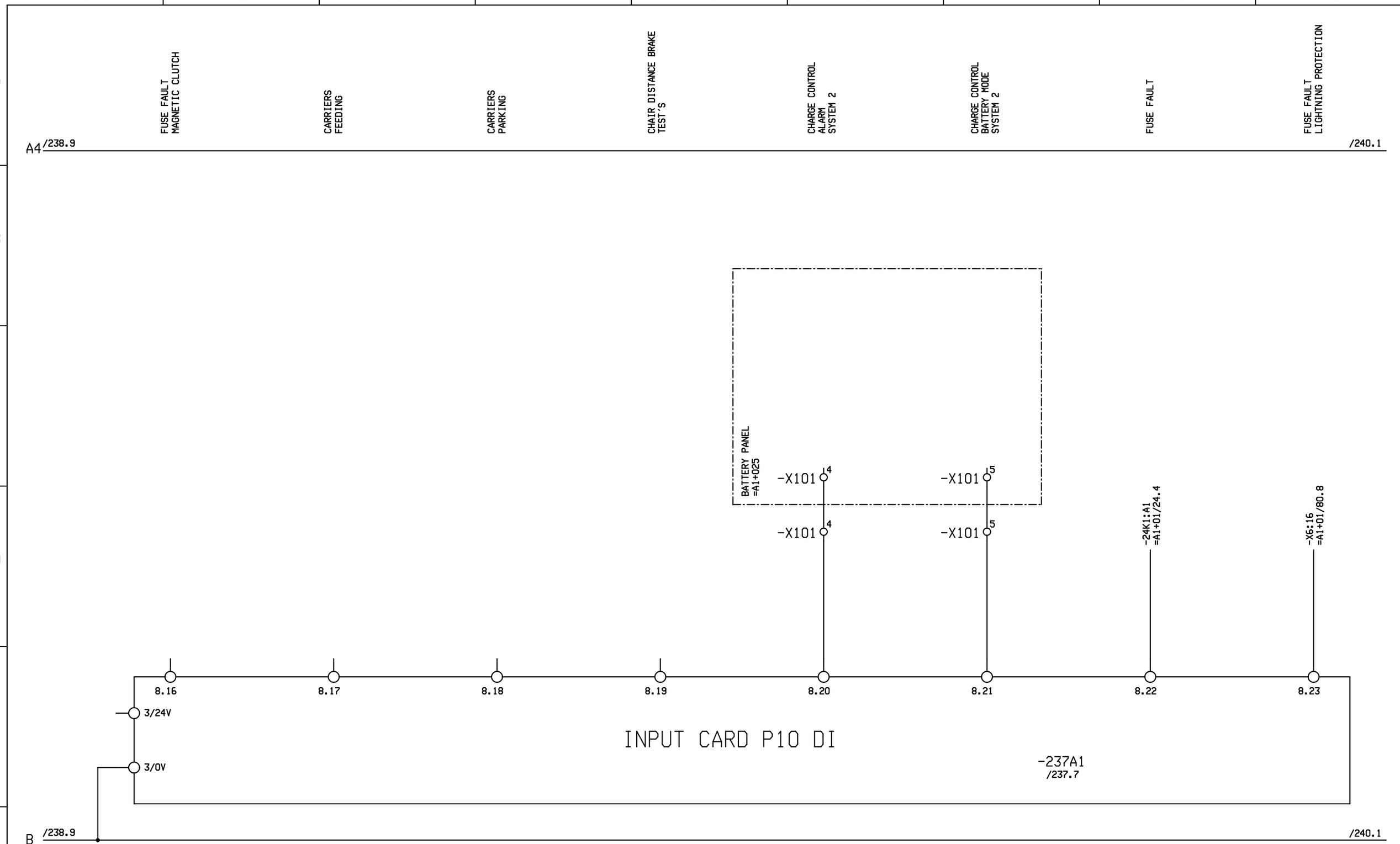

Revision	2.0	Drawn by	SST
Date	19.01.17	Dr.ch.by	FMa
File:	ANWAA4185		

10-MGD BaNa4
WAA0004185
DANANG / VIETNAM

Doppelmayr ®
Innova Patent GmbH
A-6960 WOLFURT / AUSTRIA

INPUT PLC (ST)

DRIVE STATION | LV-CONTROL

=A1+01

Date	20.01.17
Sheet :	239
Cont.sheet:	240

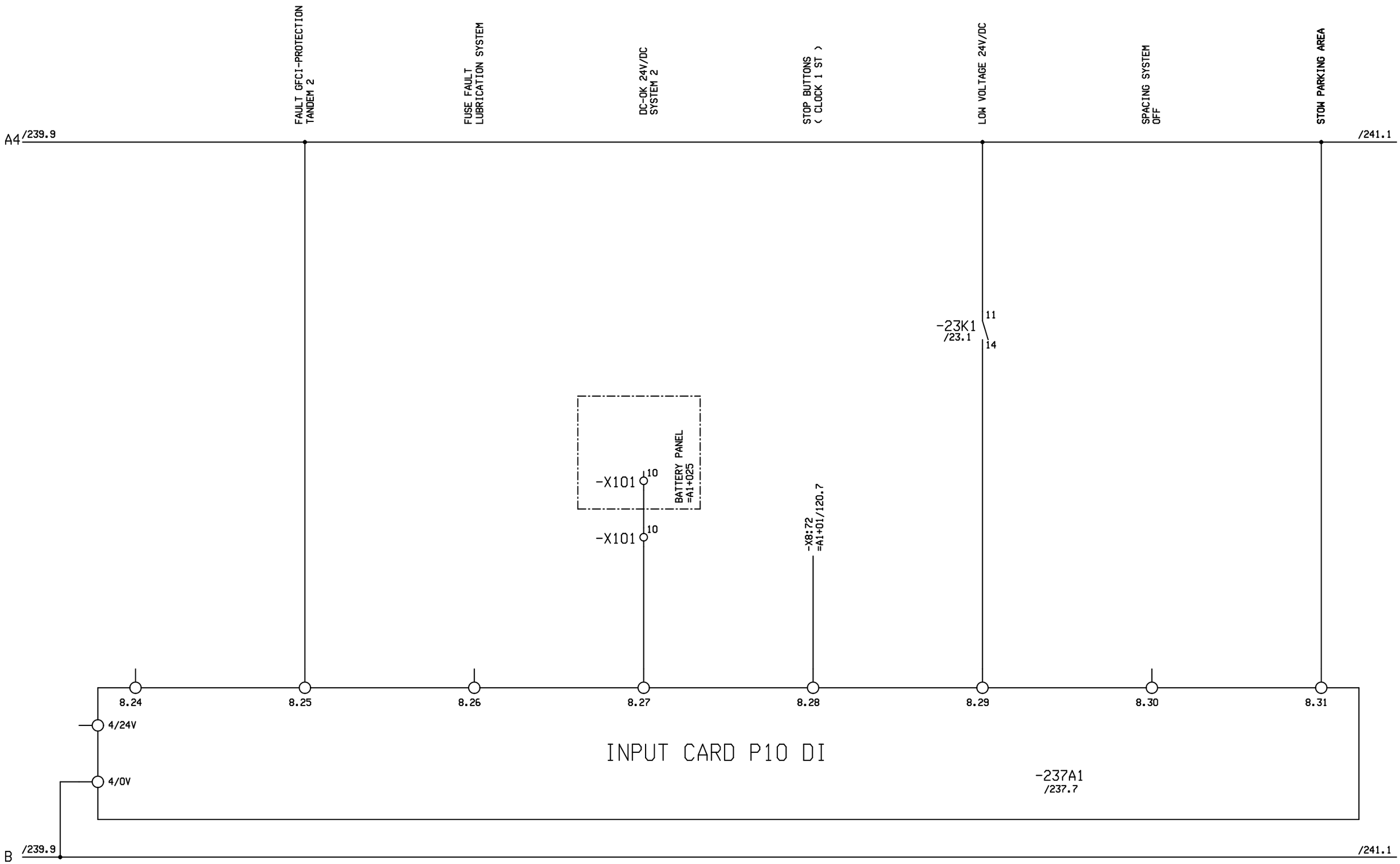

Revision	2.0	Drawn by	SST	10-MGD BaNa4 WAA0004185 DANANG / VIETNAM	Doppelmayr ® Innova Patent GmbH A-6960 WOLFURT / AUSTRIA	INPUT PLC (ST)	=A1+01
Date	19.01.17	Dr.ch.by	FMa				Date 11.05.17
File:	ANWAA4185					DRIVE STATION / LV-CONTROL	Sheet : 240
							Cont.sheet: 241

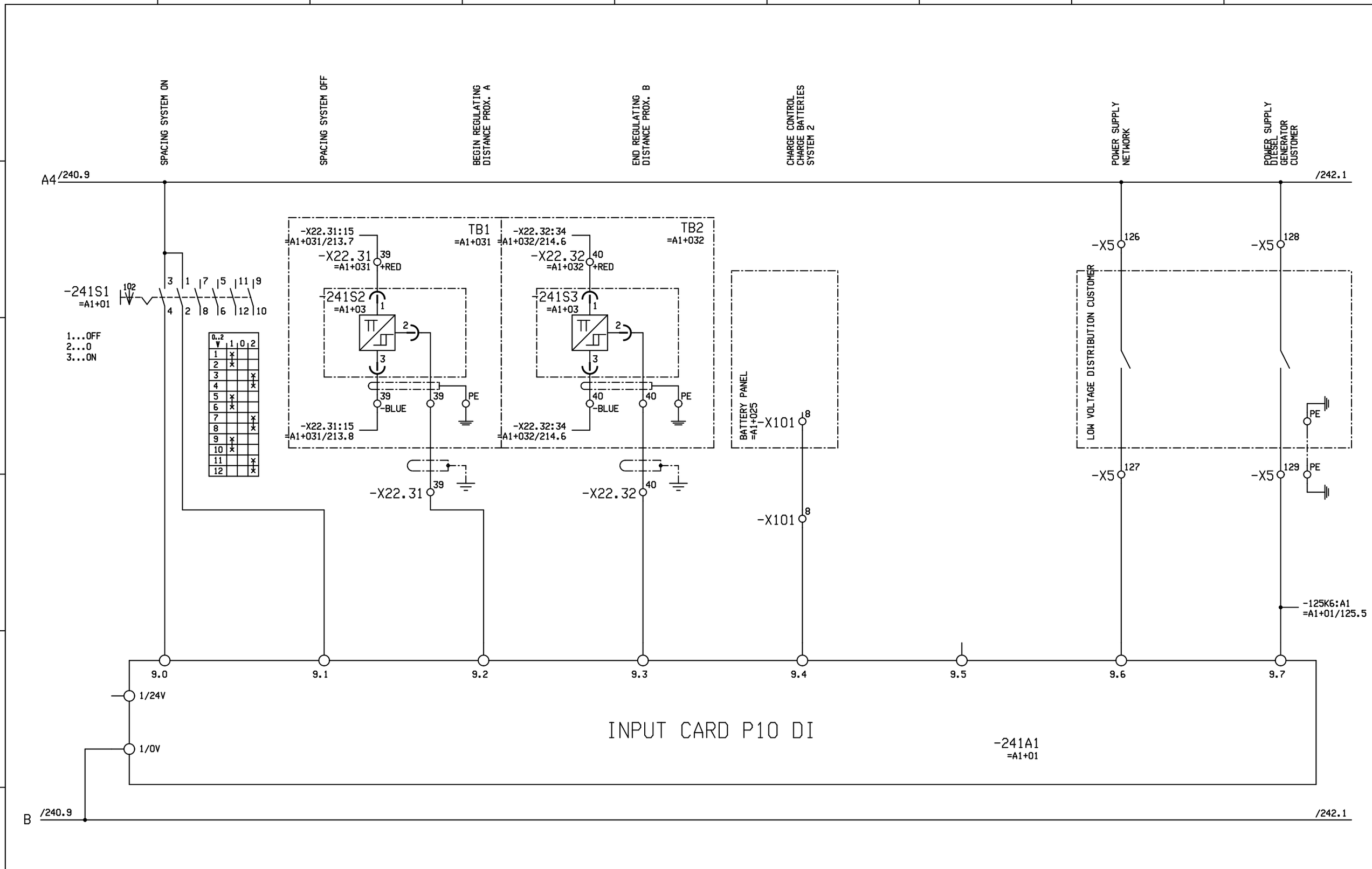

Revision	2.0	Drawn by	SST
Date	19.01.17	Dr.ch.by	FMa
File:	ANWAA4185		

10-MGD BaNa4
WAA0004185
DANANG / VIETNAM

Doppelmayr ®
Innova Patent GmbH
A-6960 WOLFURT / AUSTRIA

INPUT PLC (ST)

DRIVE STATION | LV-CONTROL

=A1+01

Date	11.05.17
Sheet :	241
Cont.sheet:	242

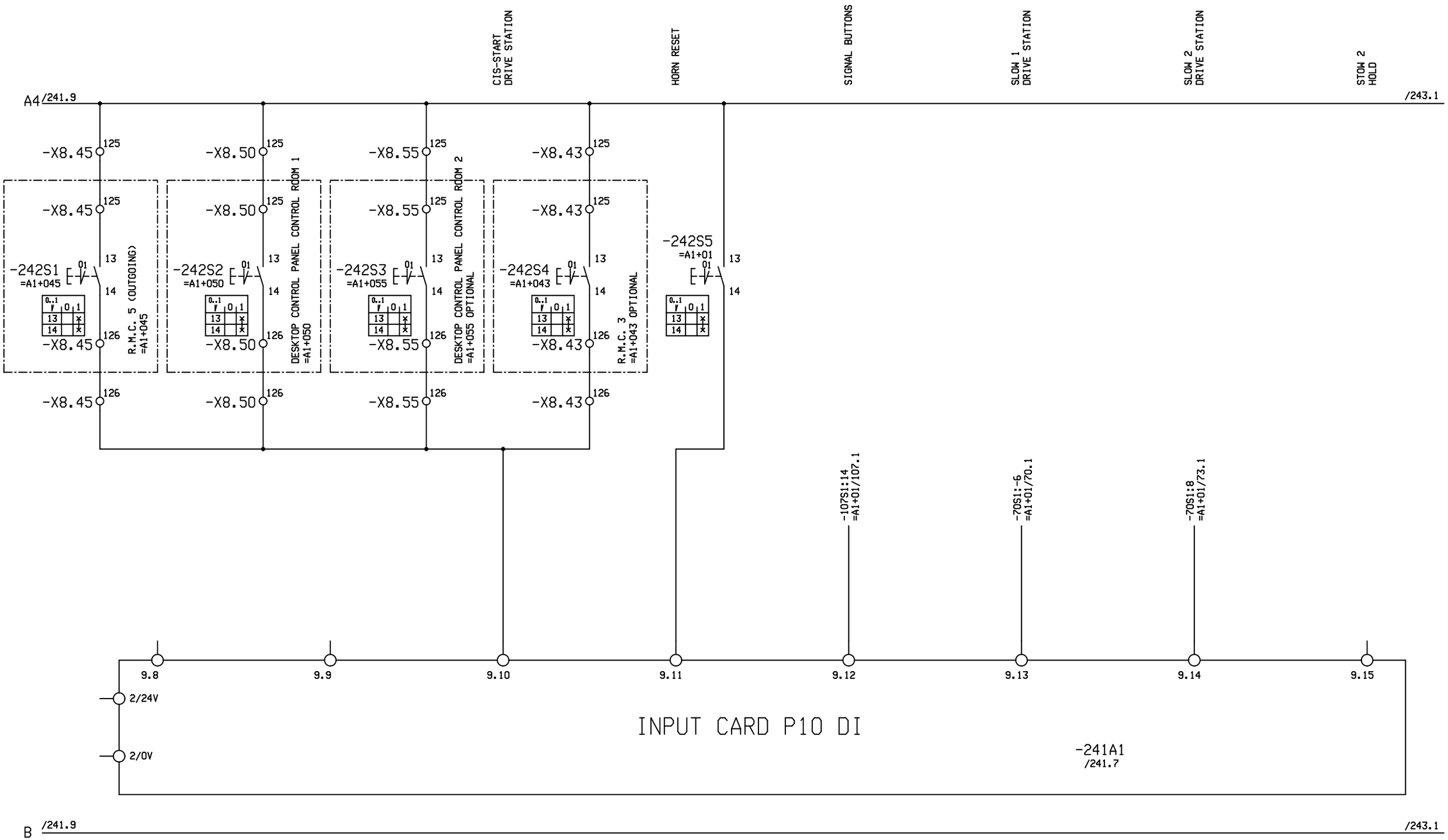

Revision	2.0	Drawn by	SST
Date	19.01.17	Dr.ch.by	FMa
File:	ANWAA4185		

10-MGD BaNa4
WAA0004185
DANANG / VIETNAM

Doppelmayr ®
Innova Patent GmbH
A-6960 WOLFURT / AUSTRIA

INPUT PLC (ST)

DRIVE STATION | LV-CONTROL

=A1+01

Date	20.01.17
Sheet :	242
Cont.sheet:	243

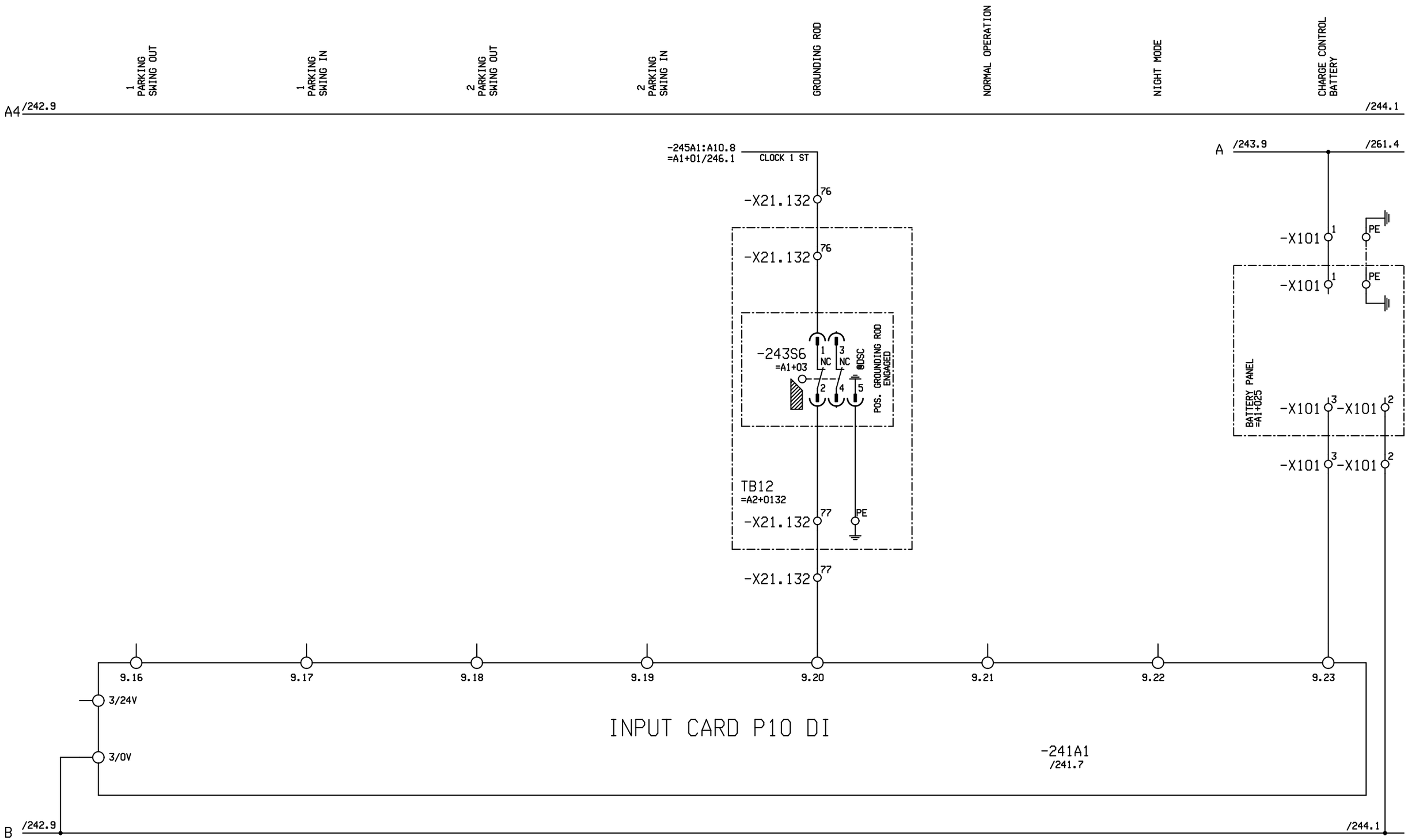

Revision	2.0	Drawn by	SST
Date	19.01.17	Dr.ch.by	FMa

File: ANWAA4185

10-MGD BaNa4
WAA0004185
DANANG / VIETNAM

Doppelmayr ®
Innova Patent GmbH
A-6960 WOLFURT / AUSTRIA

INPUT PLC (ST)

DRIVE STATION | LV-CONTROL

=A1+01

Date	19.01.17
Sheet :	243
Cont.sheet:	244

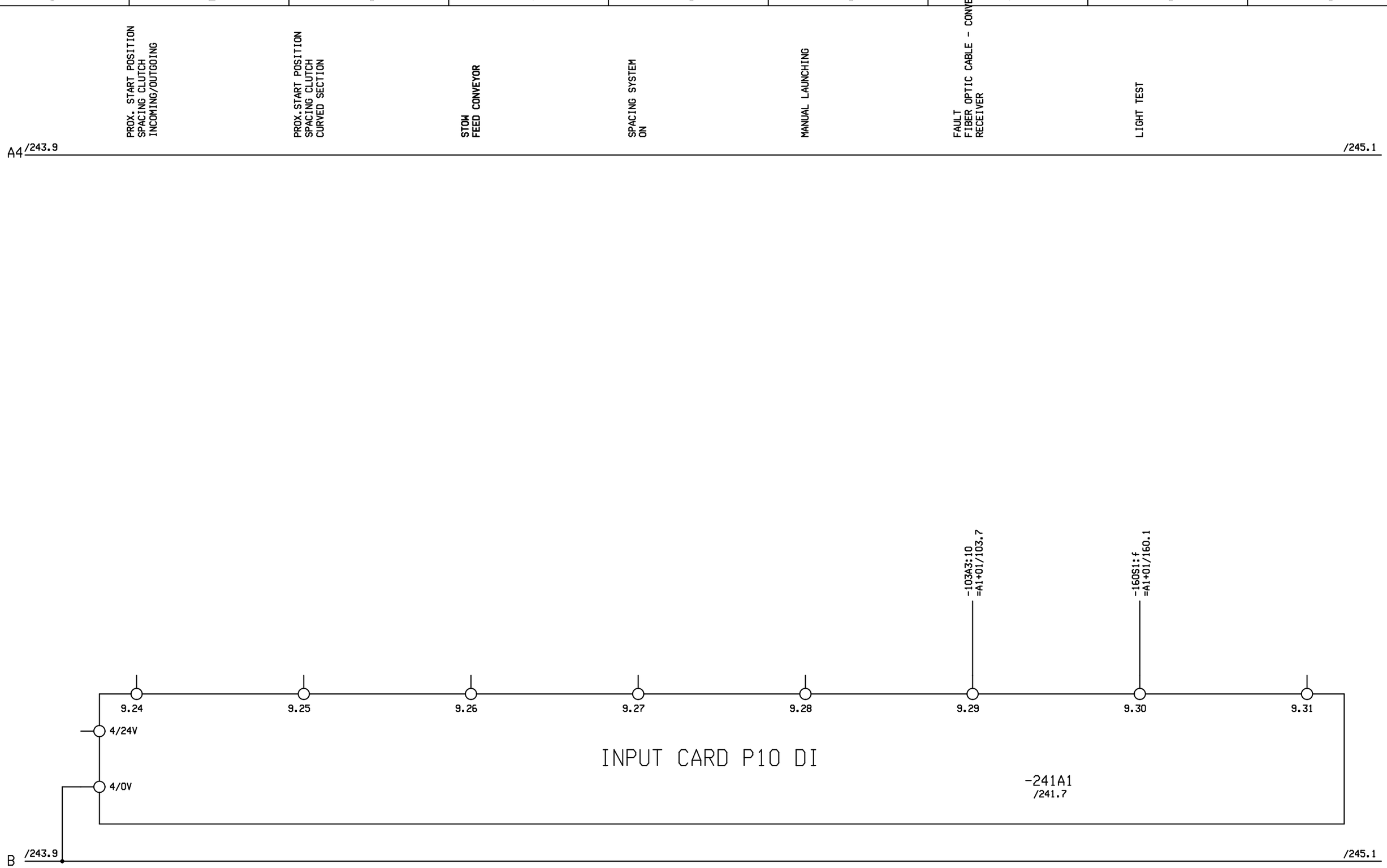

Revision	2.0	Drawn by	SST
Date	19.01.17	Dr.ch.by	FMa
File:	ANWAA4185		

10-MGD BaNa4
WAA0004185
DANANG / VIETNAM

Doppelmayr ®
Innova Patent GmbH
A-6960 WOLFURT / AUSTRIA

INPUT PLC (ST)

DRIVE STATION | LV-CONTROL

=A1+01

Date	19.04.16
Sheet :	244
Cont.sheet:	245

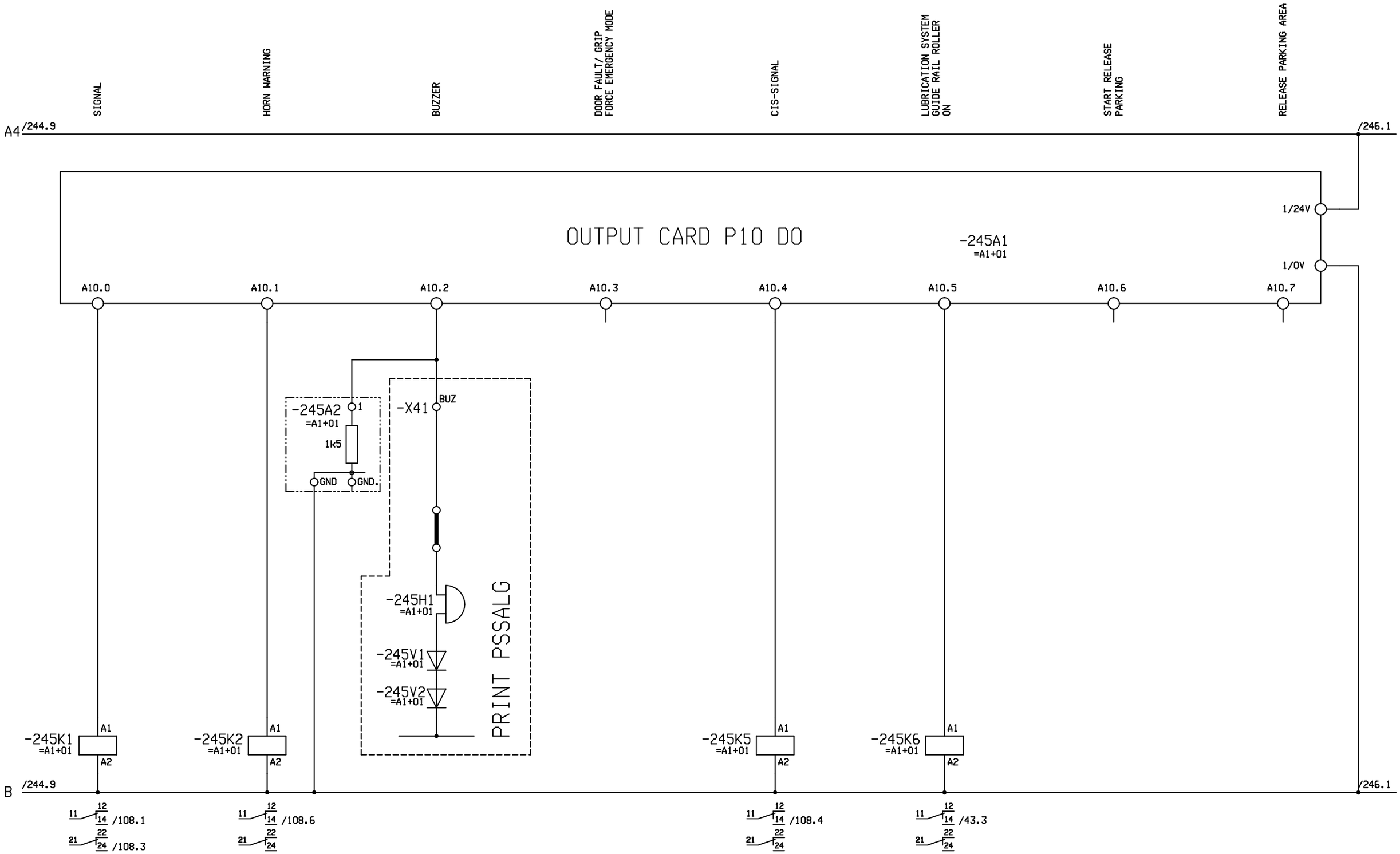

Revision	2.0	Drawn by	SST	10-MGD BaNa4 WAA0004185 DANANG / VIETNAM	Doppelmayr ® Innova Patent GmbH A-6960 WOLFURT / AUSTRIA	OUTPUT PLC (ST)	=A1+01
Date	19.01.17	Dr.ch.by	FMa				Date 09.06.16
File:	ANWAA4185					DRIVE STATION / LV-CONTROL	Sheet : 245
							Cont.sheet: 246

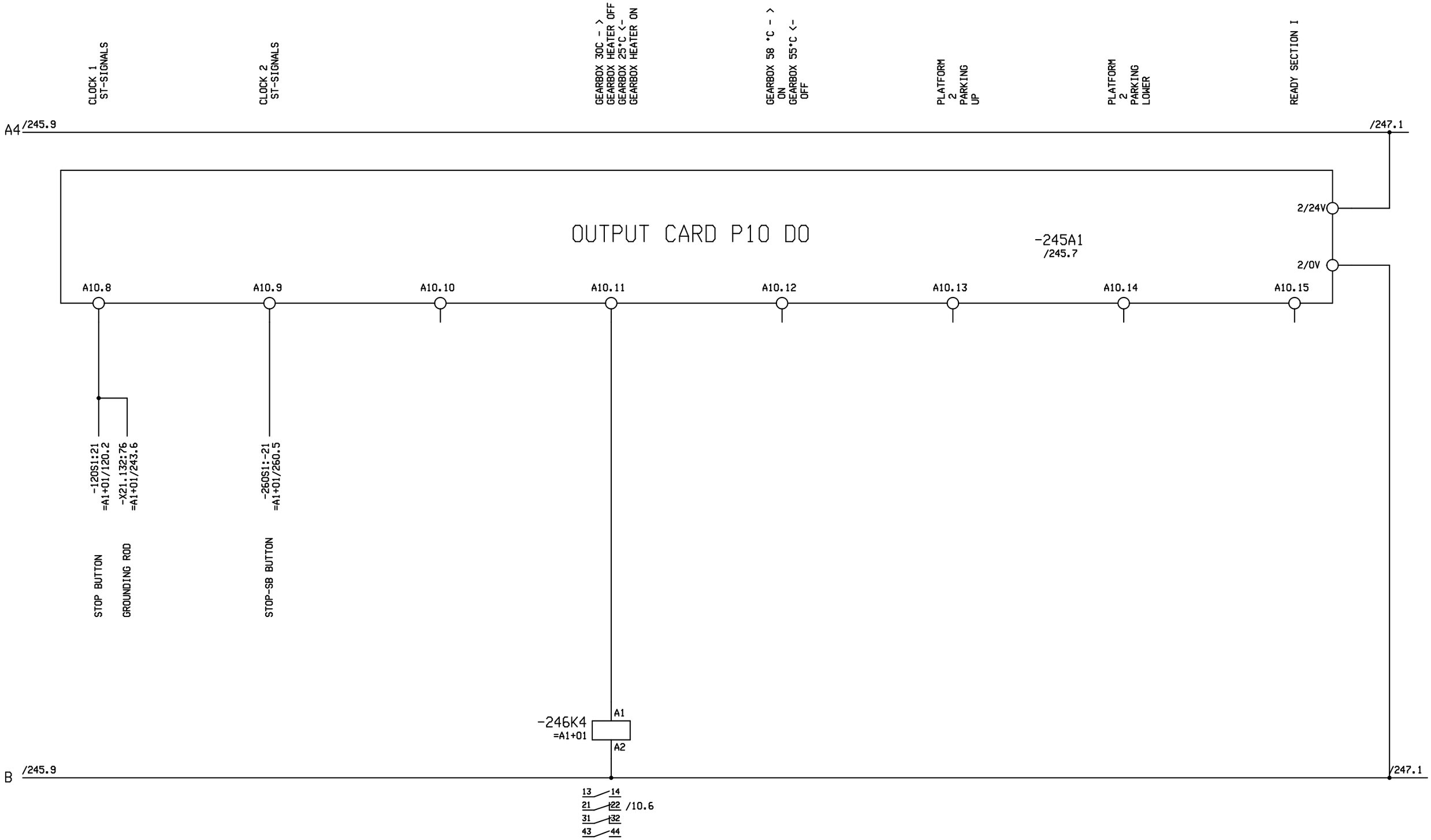

Revision	2.0	Drawn by	SST
Date	19.01.17	Dr.ch.by	FMa
File:	ANWAA4185		

10-MGD BaNa4
WAA0004185
DANANG / VIETNAM

Doppelmayr ®
Innova Patent GmbH
A-6960 WOLFURT / AUSTRIA

OUTPUT PLC (ST)

DRIVE STATION | LV-CONTROL

=A1+01

Date	14.06.16
Sheet :	246
Cont.sheet:	247

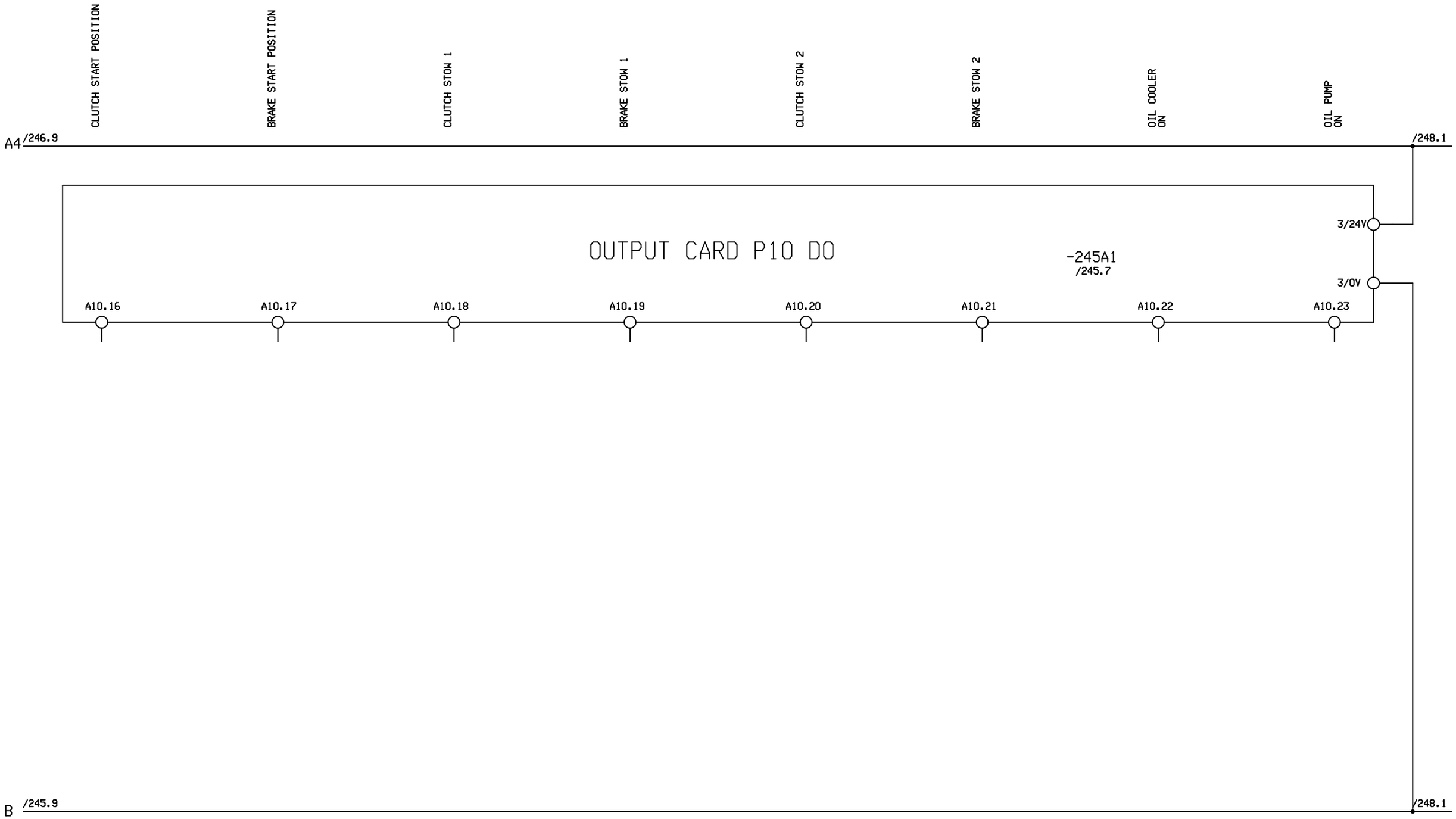

Revision	2.0	Drawn by	SST
Date	19.01.17	Dr.ch.by	FMa
File:	ANWAA4185		

10-MGD BaNa4
WAA0004185
DANANG / VIETNAM

Doppelmayr ®
Innova Patent GmbH
A-6960 WOLFURT / AUSTRIA

OUTPUT PLC (ST)

DRIVE STATION | LV-CONTROL

=A1+01

Date	03.06.16
Sheet :	247
Cont.sheet:	248

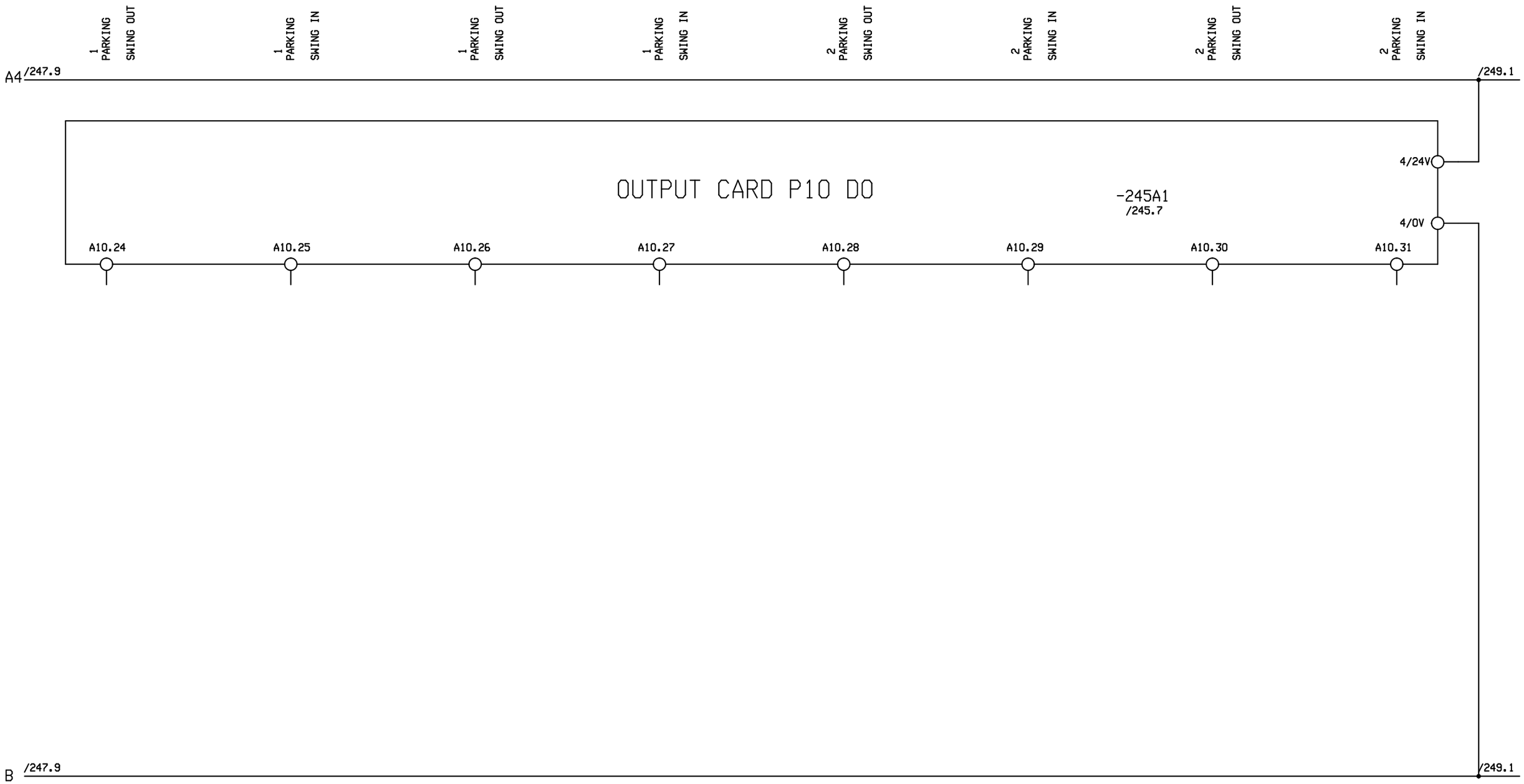

Revision	2.0	Drawn by	SST
Date	19.01.17	Dr.ch.by	FMa
File:	ANWAA4185		

10-MGD BaNa4
WAA0004185
DANANG / VIETNAM

Doppelmayr ®
Innova Patent GmbH
A-6960 WOLFURT / AUSTRIA

OUTPUT PLC (ST)

DRIVE STATION | LV-CONTROL

=A1+01

Date	27.04.16
Sheet :	248
Cont.sheet:	249

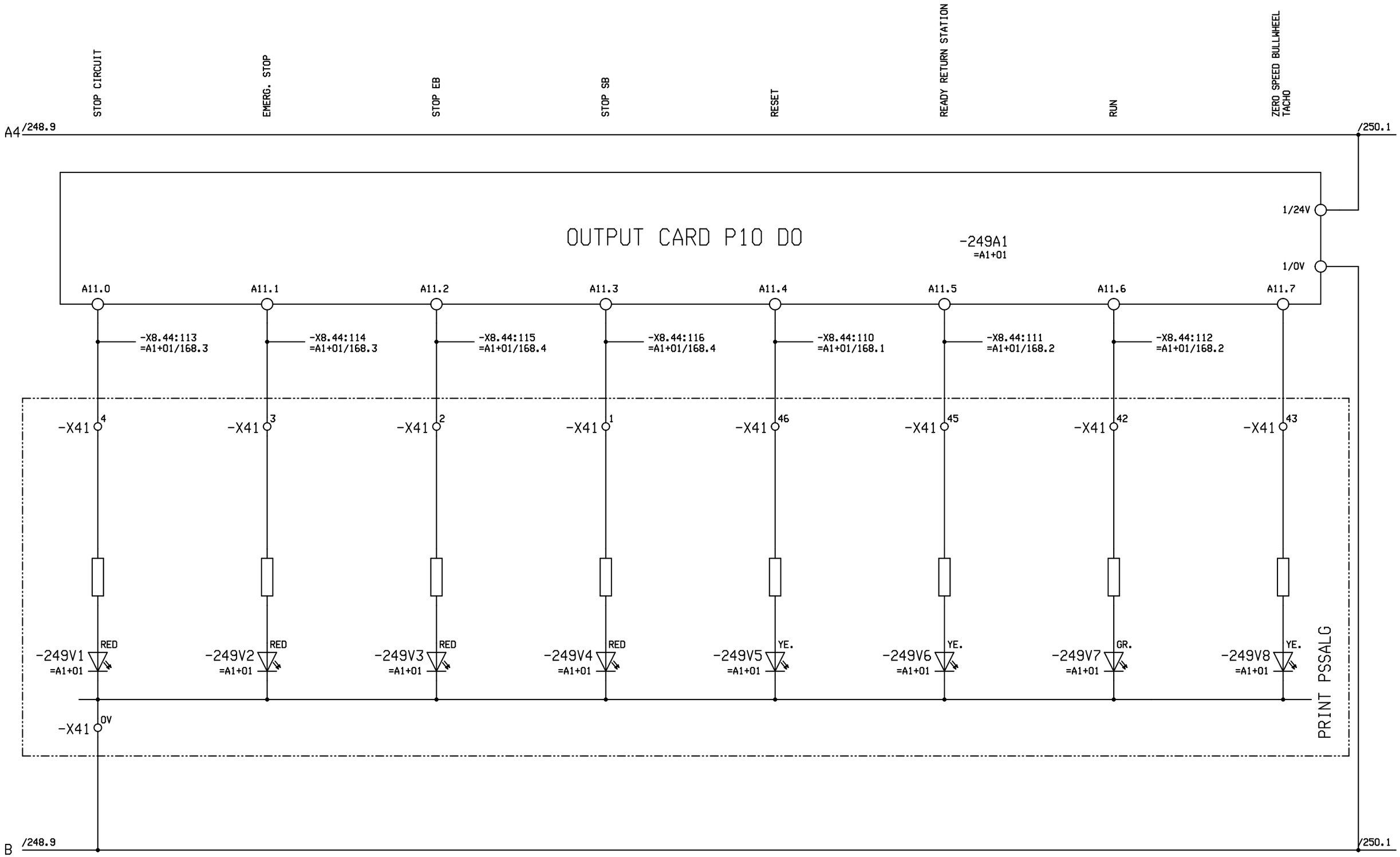

Revision	2.0	Drawn by	SST
Date	19.01.17	Dr.ch.by	FMa
File:	ANWAA4185		

10-MGD BaNa4
WAA0004185
DANANG / VIETNAM

Doppelmayr ®
Innova Patent GmbH
A-6960 WOLFURT / AUSTRIA

OUTPUT PLC (ST)

DRIVE STATION | LV-CONTROL

=A1+01

Date	03.06.16
Sheet :	249
Cont.sheet:	250

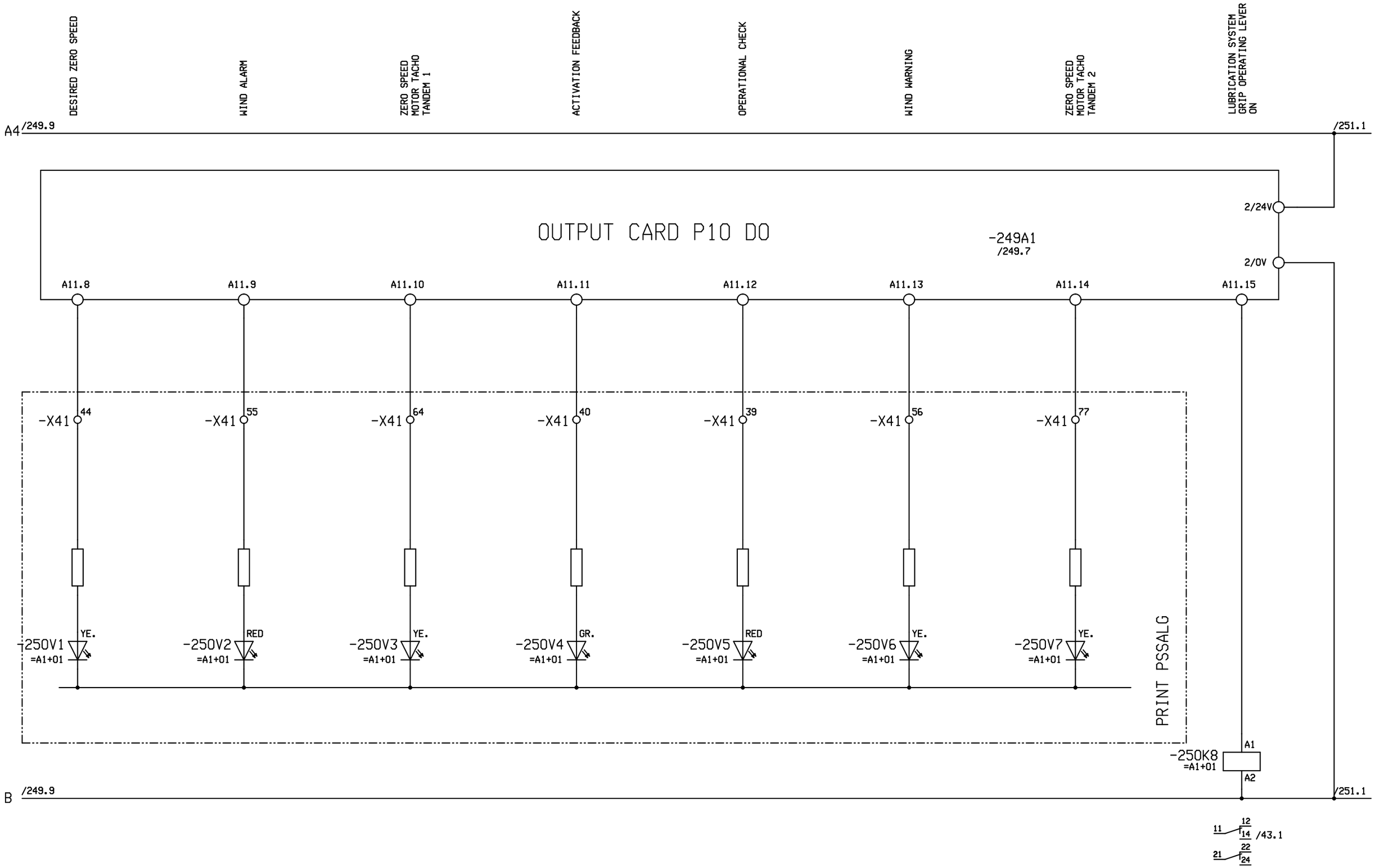

Revision	2.0	Drawn by	SST
Date	19.01.17	Dr.ch.by	FMa
File:	ANWAA4185		

10-MGD BaNa4
WAA0004185
DANANG / VIETNAM

Doppelmayr ®
Innova Patent GmbH
A-6960 WOLFURT / AUSTRIA

OUTPUT PLC (ST)

DRIVE STATION | LV-CONTROL

=A1+01

Date	07.06.16
Sheet :	250
Cont.sheet:	251

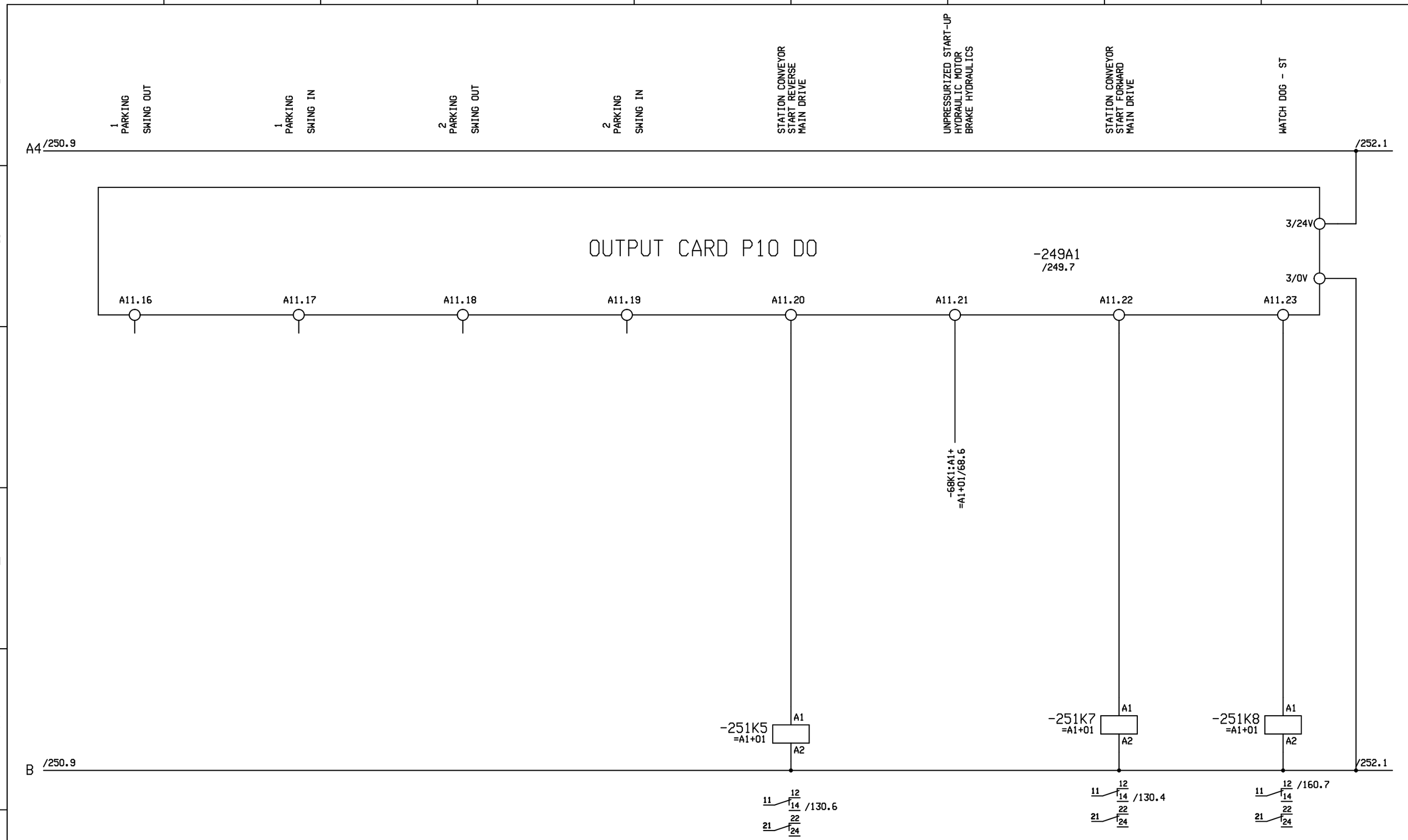

Revision	2.0	Drawn by	SST
Date	19.01.17	Dr.ch.by	FMa

File: ANWAA4185

10-MGD BaNa4
WAA0004185
DANANG / VIETNAM

Doppelmayr ®
Innova Patent GmbH
A-6960 WOLFURT / AUSTRIA

OUTPUT PLC (ST)

DRIVE STATION | LV-CONTROL

=A1+01

Date	14.06.16
Sheet :	251
Cont.sheet:	252

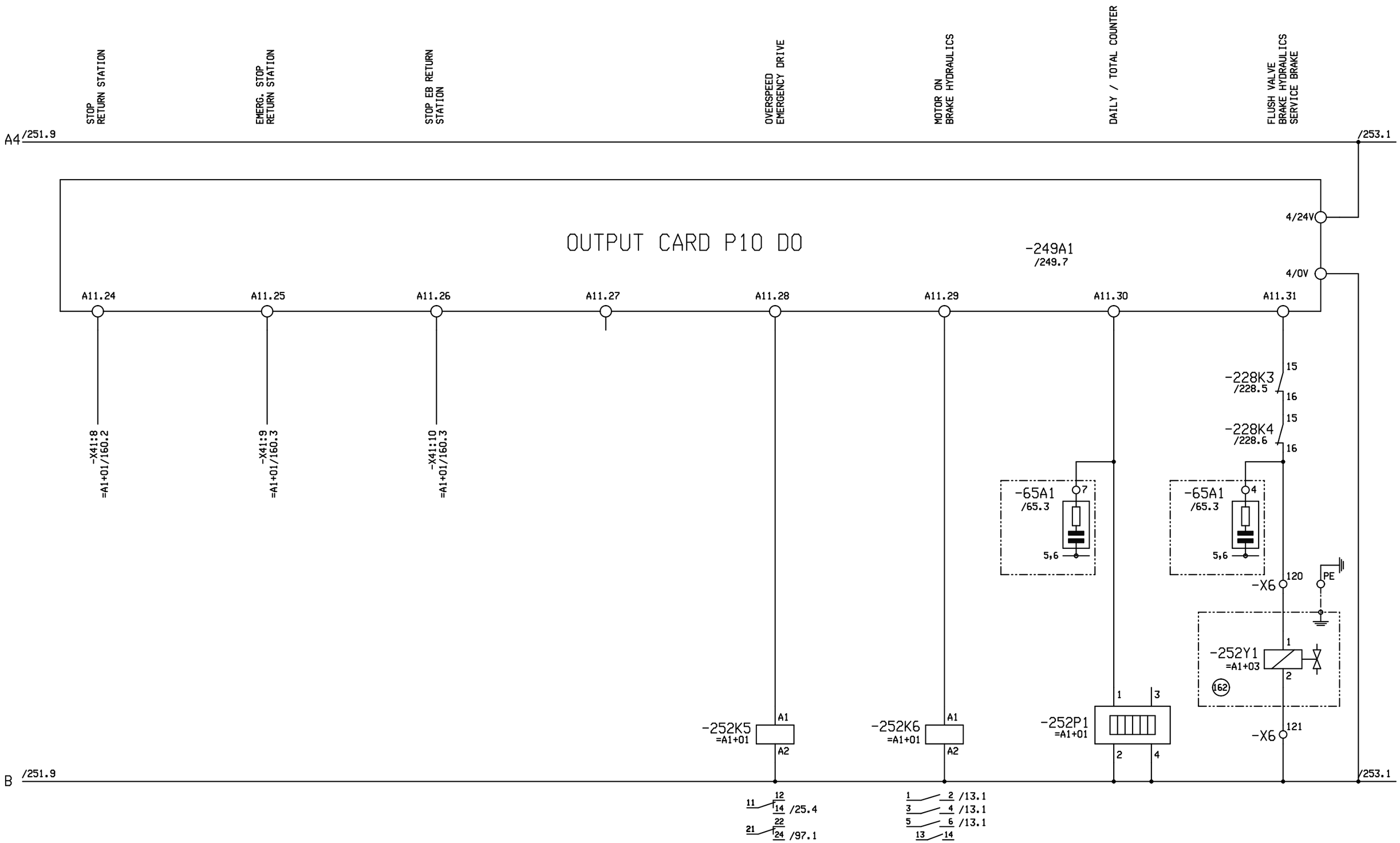

Revision	2.0	Drawn by	SST
Date	19.01.17	Dr.ch.by	FMa

File: ANWAA4185

10-MGD BaNa4
WAA0004185
DANANG / VIETNAM

Doppelmayr ®
Innova Patent GmbH
A-6960 WOLFURT / AUSTRIA

OUTPUT PLC (ST)

DRIVE STATION | LV-CONTROL

=A1+01

Date	19.01.17
Sheet :	252
Cont.sheet:	253

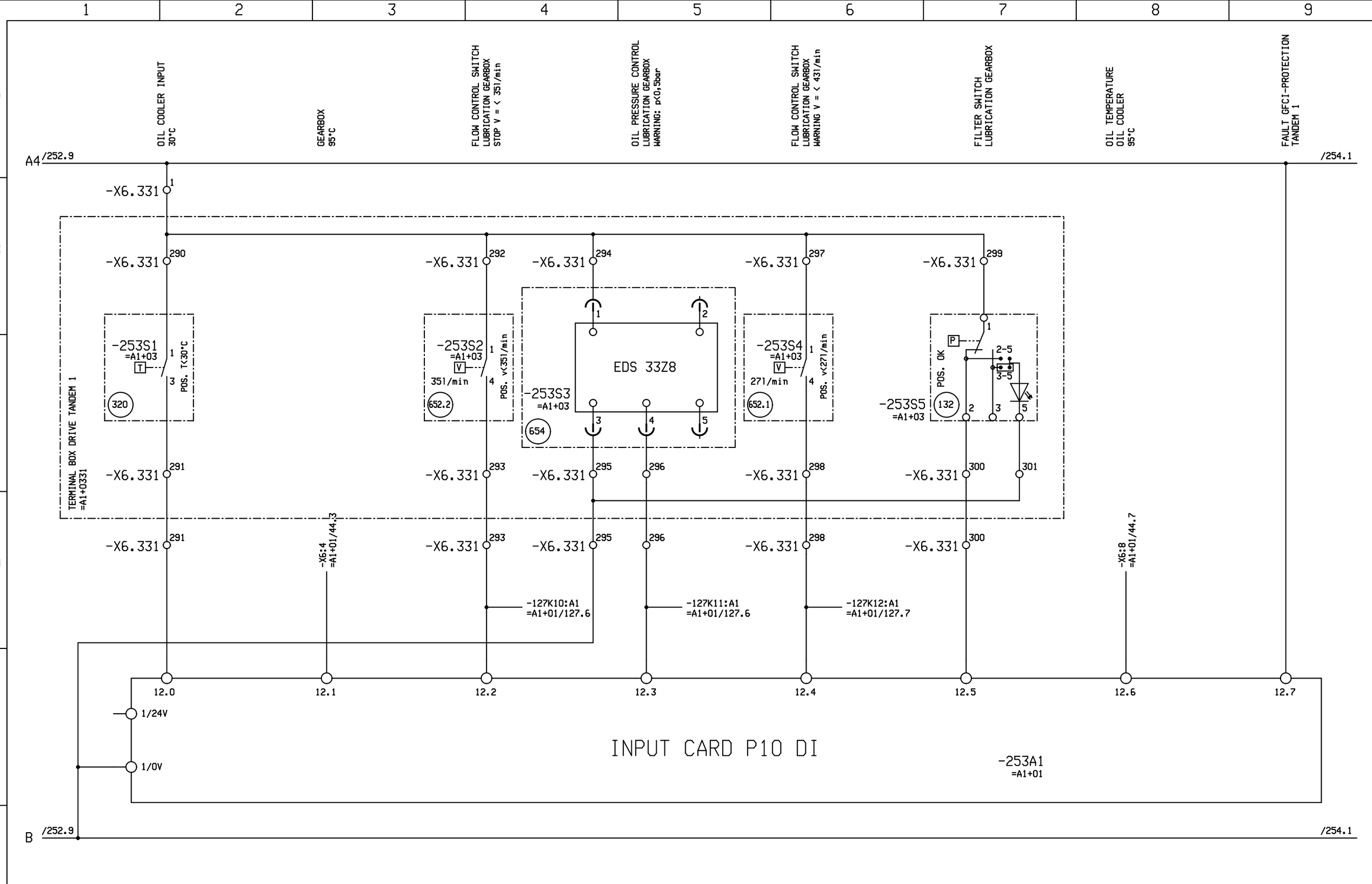

Revision	2.0	Drawn by	SST
Date	19.01.17	Dr.ch.by	FMa
File:	ANWAA4185		

10-MGD BaNa4
WAA0004185
DANANG / VIETNAM

Doppelmayr ®
Innova Patent GmbH
A-6960 WOLFURT / AUSTRIA

INPUT PLC (ST)

DRIVE STATION | LV-CONTROL

=A1+01

Date	18.10.16
Sheet :	253
Cont.sheet:	254

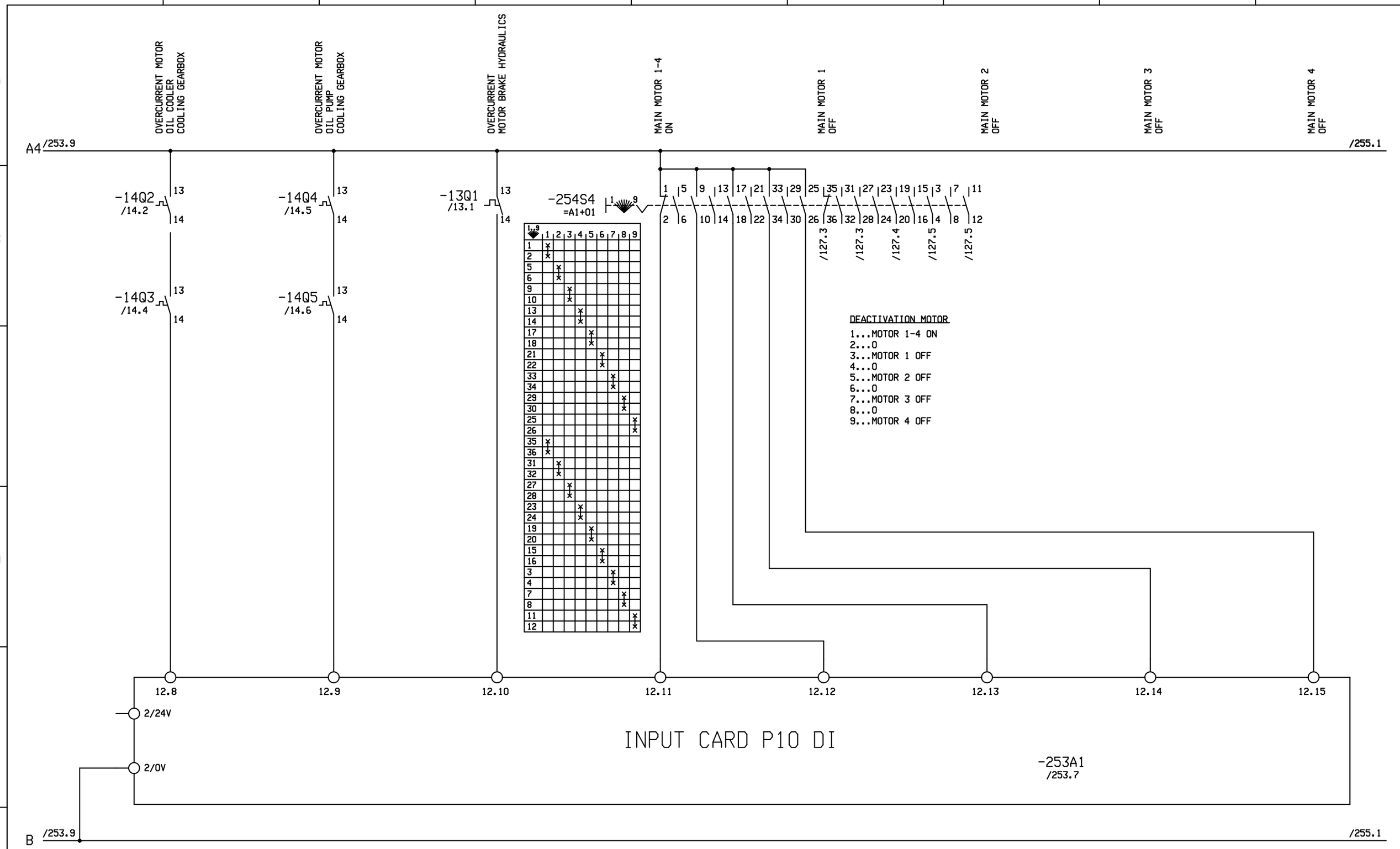

Revision	2.0	Drawn by	SST
Date	19.01.17	Dr.ch.by	FMa
File:	ANWAA4185		

10-MGD BaNa4
WAA0004185
DANANG / VIETNAM

Doppelmayr ®
Innova Patent GmbH
A-6960 WOLFURT / AUSTRIA

INPUT PLC (ST)

DRIVE STATION | LV-CONTROL

=A1+01

Date	18.10.16
Sheet :	254
Cont.sheet:	255

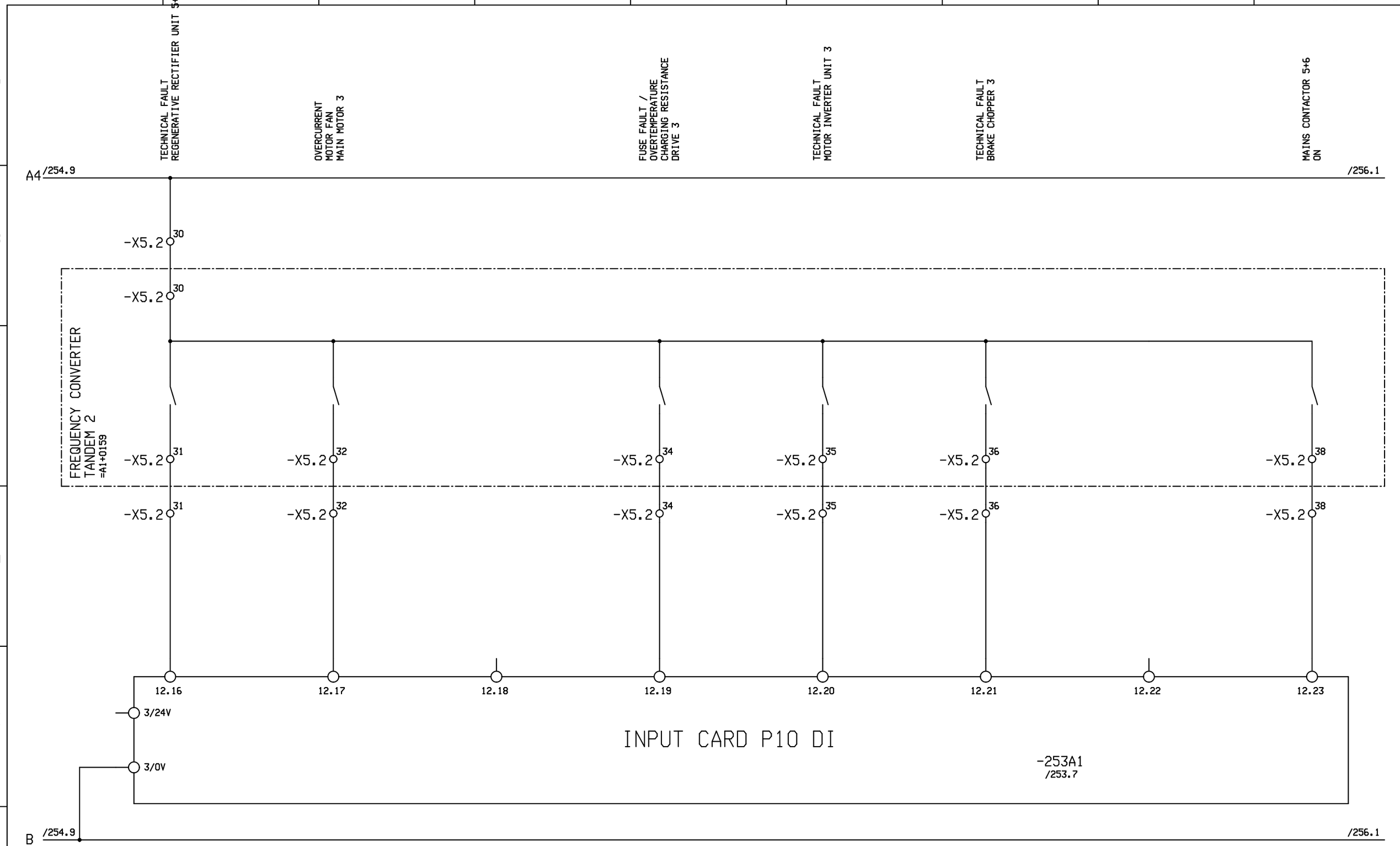

Revision	2.0	Drawn by	SST
Date	19.01.17	Dr.ch.by	FMa
File:	ANWAA4185		

10-MGD BaNa4
WAA0004185
DANANG / VIETNAM

Doppelmayr ®
Innova Patent GmbH
A-6960 WOLFURT / AUSTRIA

INPUT PLC (ST)

DRIVE STATION | LV-CONTROL

=A1+01

Date	18.10.16
Sheet :	255
Cont.sheet:	256

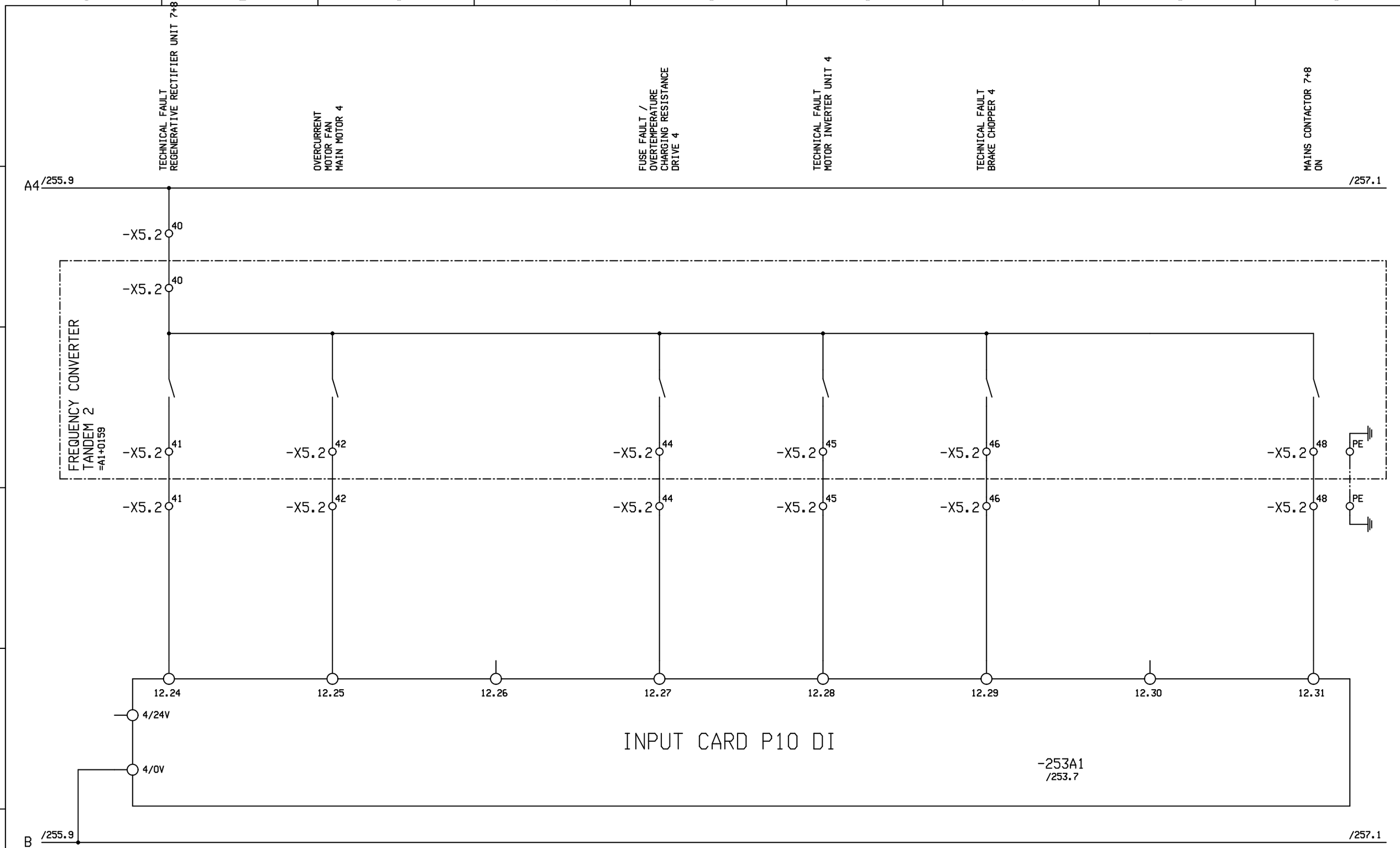

Revision	2.0	Drawn by	SST	10-MGD BaNa4 WAA0004185 DANANG / VIETNAM	Doppelmayr ® Innova Patent GmbH A-6960 WOLFURT / AUSTRIA	INPUT PLC (ST)
Date	19.01.17	Dr.ch.by	FMa			DRIVE STATION / LV-CONTROL
File:	ANWAA4185					

=A1+01	
Date	18.10.16
Sheet :	256
Cont.sheet:	257

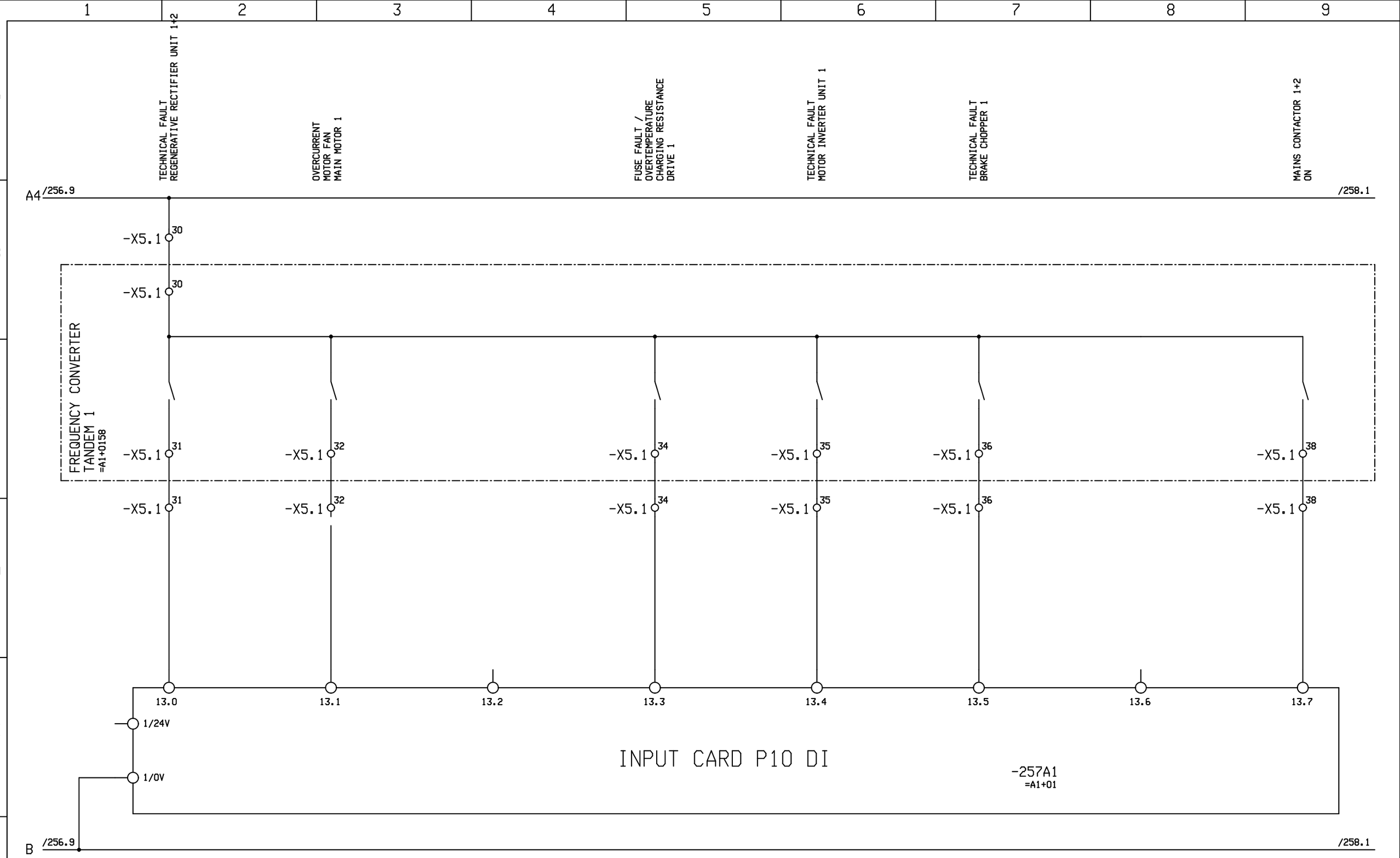

Revision	2.0	Drawn by	SST
Date	19.01.17	Dr.ch.by	FMa
File:	ANWAA4185		

10-MGD BaNa4
WAA0004185
DANANG / VIETNAM

Doppelmayr ®
Innova Patent GmbH
A-6960 WOLFURT / AUSTRIA

INPUT PLC (ST)

DRIVE STATION | LV-CONTROL

=A1+01

Date	18.10.16
Sheet :	257
Cont.sheet:	258

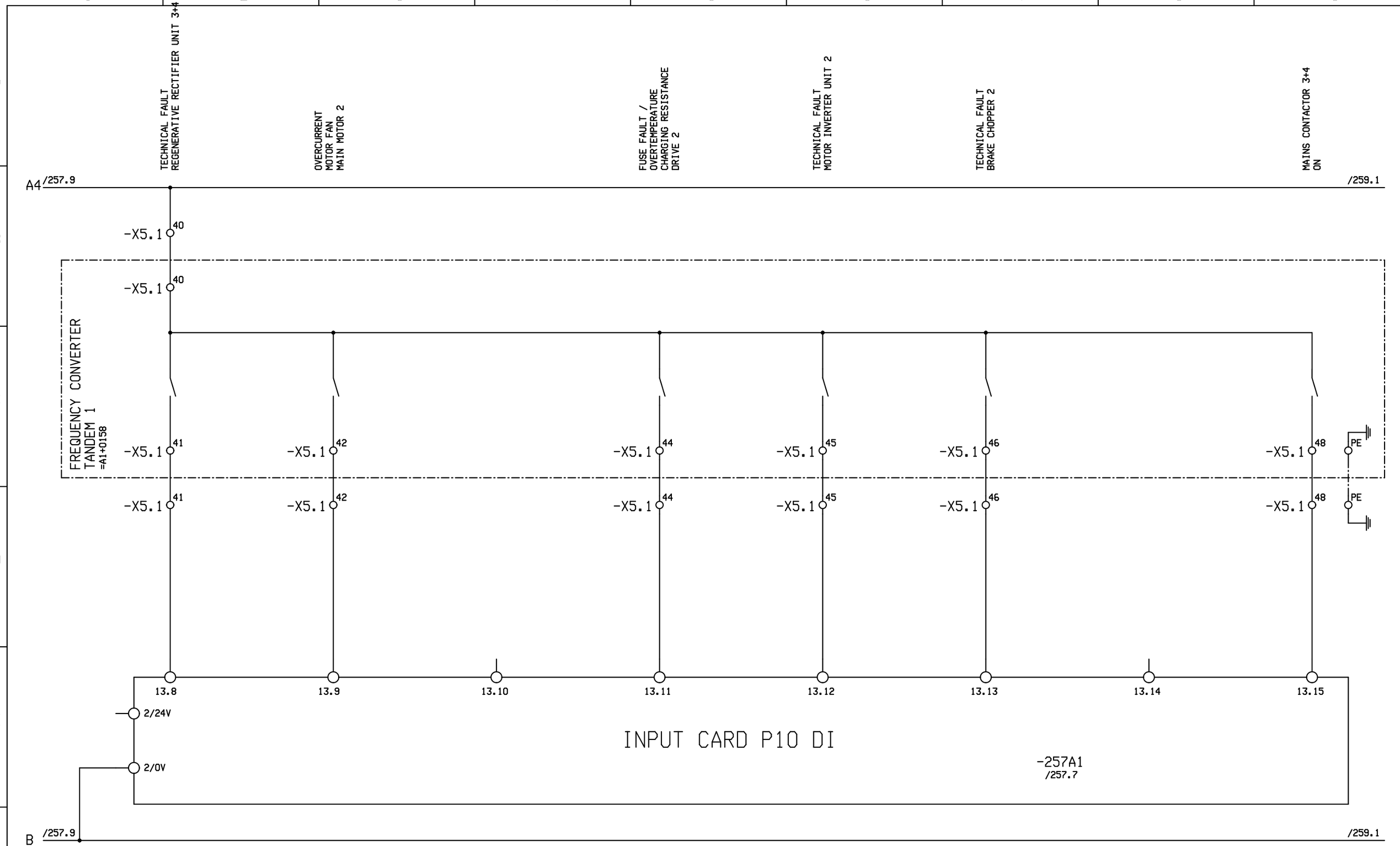

Revision	2.0	Drawn by	SST	10-MGD BaNa4 WAA0004185 DANANG / VIETNAM	Doppelmayr ® Innova Patent GmbH A-6960 WOLFURT / AUSTRIA	INPUT PLC (ST)
Date	19.01.17	Dr.ch.by	FMa			DRIVE STATION / LV-CONTROL
File:	ANWAA4185					

=A1+01	
Date	18.10.16
Sheet :	258
Cont.sheet:	259

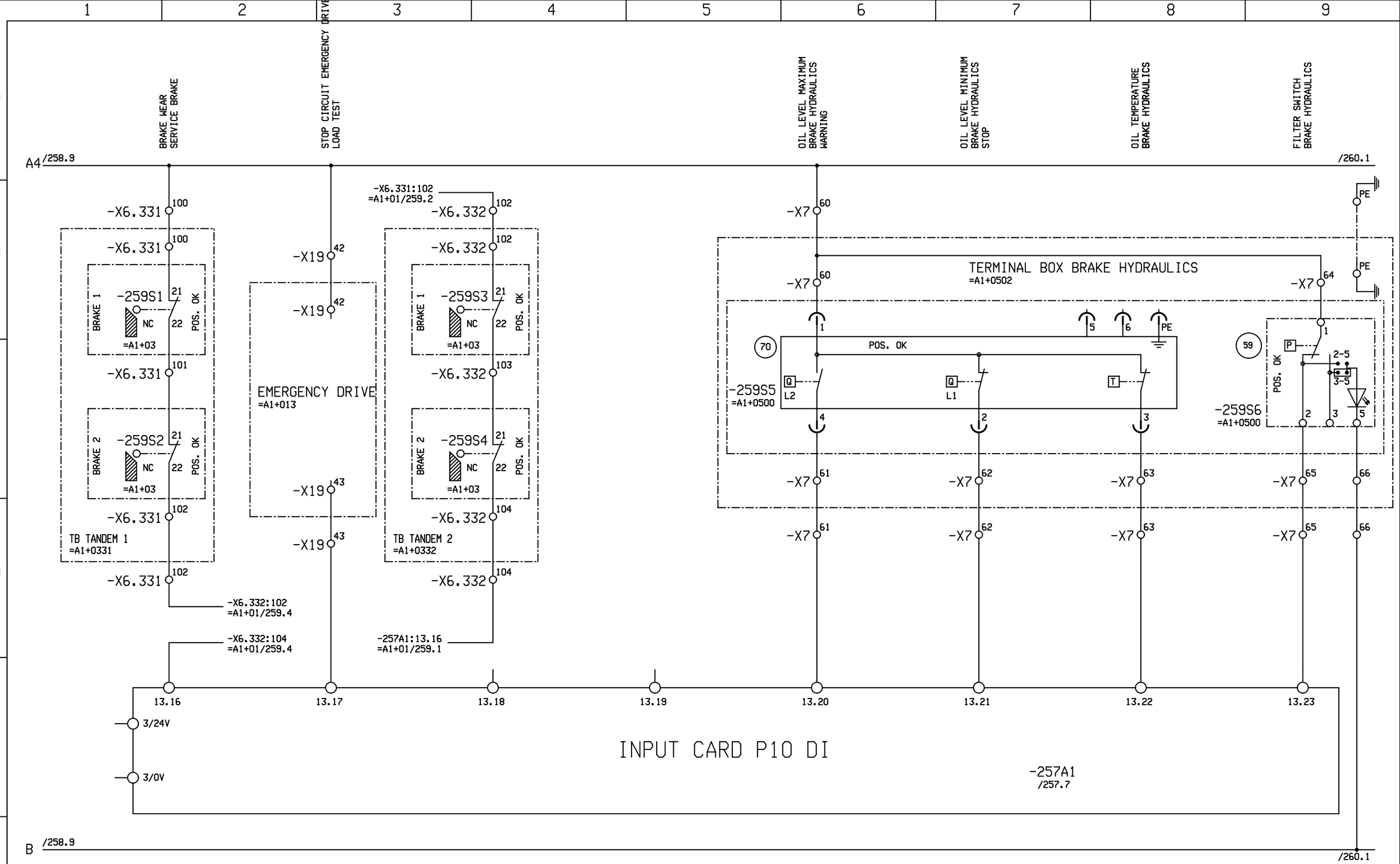

Revision	2.0	Drawn by	SST
Date	19.01.17	Dr.ch.by	FMa
File:	ANWAA4185		

10-MGD BaNa4
WAA0004185
DANANG / VIETNAM

Doppelmayr ®
Innova Patent GmbH
A-6960 WOLFURT / AUSTRIA

INPUT PLC (ST)

DRIVE STATION | LV-CONTROL

=A1+01

Date	10.05.17
Sheet :	259
Cont.sheet:	260

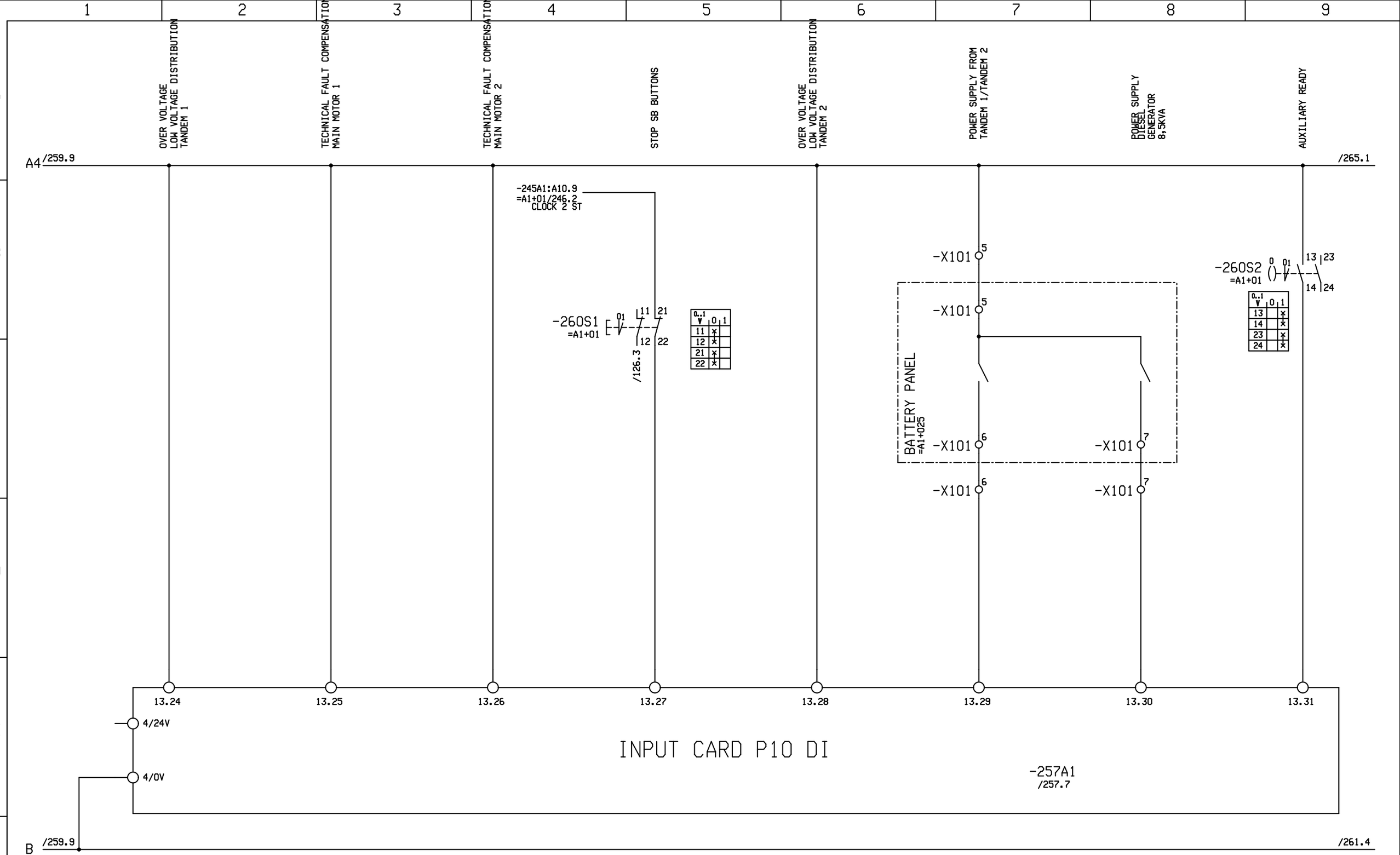

Revision	2.0	Drawn by	SST
Date	19.01.17	Dr.ch.by	FMa
File:	ANWAA4185		

10-MGD BaNa4
WAA0004185
DANANG / VIETNAM

Doppelmayr ®
Innova Patent GmbH
A-6960 WOLFURT / AUSTRIA

INPUT PLC (ST)

DRIVE STATION | LV-CONTROL

=A1+01

Date	10.05.17
Sheet :	260
Cont.sheet:	261

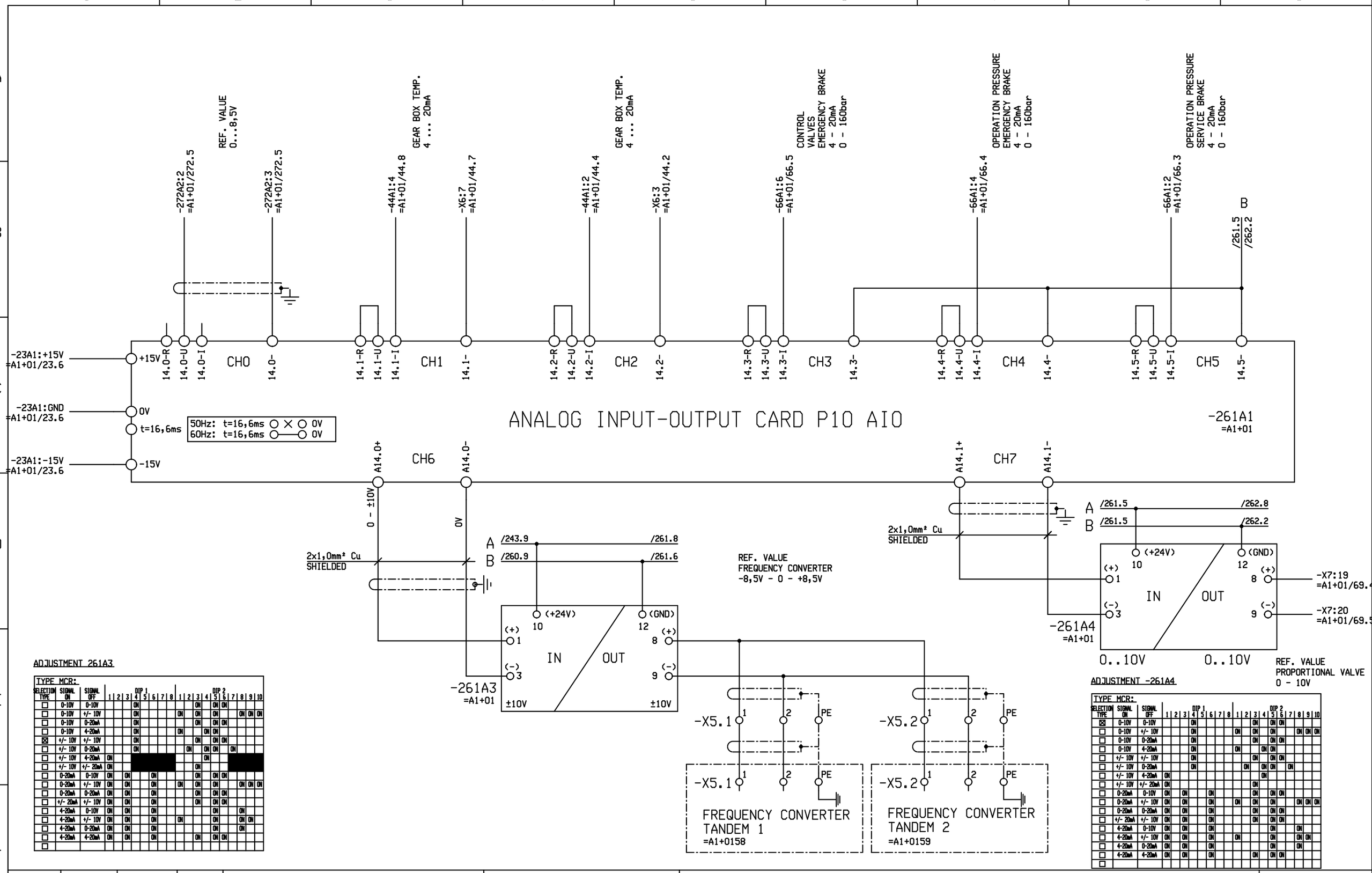

ADJUSTMENT 261A3

TYPE MCR:

SELECTION TYPE	SIGNAL ON	SIGNAL OFF	DIP 1 1	2	3	4	5	6	7	8	DIP 2 1	2	3	4	5	6	7	8	9	10
☐	0-10V	0-10V				ON							ON		ON	ON				
☐	0-10V	+/- 10V				ON					ON		ON		ON			ON	ON	ON
☐	0-10V	0-20mA				ON							ON		ON	ON				
☐	0-10V	4-20mA				ON					ON			ON	ON					
☒	+/- 10V	+/- 10V				ON							ON		ON	ON				
☐	+/- 10V	0-20mA				ON						ON		ON	ON		ON			
☐	+/- 10V	4-20mA	ON											ON						
☐	+/- 10V	+/- 20mA	ON										ON							
☐	0-20mA	0-10V	ON		ON			ON					ON		ON	ON				
☐	0-20mA	+/- 10V	ON		ON			ON			ON		ON		ON			ON	ON	ON
☐	0-20mA	0-20mA	ON		ON			ON					ON		ON	ON				
☐	+/- 20mA	+/- 10V	ON		ON			ON					ON		ON	ON				
☐	4-20mA	0-10V	ON		ON			ON							ON			ON		
☐	4-20mA	+/- 10V	ON		ON			ON			ON				ON			ON	ON	
☐	4-20mA	0-20mA	ON		ON			ON							ON			ON		
☐	4-20mA	4-20mA	ON		ON			ON					ON		ON	ON				
☐																				

ADJUSTMENT -261A4

TYPE MCR:

SELECTION TYPE	SIGNAL ON	SIGNAL OFF	DIP 1 1	2	3	4	5	6	7	8	DIP 2 1	2	3	4	5	6	7	8	9	10
☒	0-10V	0-10V				ON							ON		ON	ON				
☐	0-10V	+/- 10V				ON					ON		ON		ON			ON	ON	ON
☐	0-10V	0-20mA				ON							ON		ON	ON				
☐	0-10V	4-20mA				ON					ON			ON	ON					
☐	+/- 10V	+/- 10V				ON							ON		ON	ON				
☐	+/- 10V	0-20mA				ON						ON		ON	ON		ON			
☐	+/- 10V	4-20mA	ON											ON						
☐	+/- 10V	+/- 20mA	ON										ON							
☐	0-20mA	0-10V	ON		ON			ON					ON		ON	ON				
☐	0-20mA	+/- 10V	ON		ON			ON			ON		ON		ON			ON	ON	ON
☐	0-20mA	0-20mA	ON		ON			ON					ON		ON	ON				
☐	+/- 20mA	+/- 10V	ON		ON			ON					ON		ON	ON				
☐	4-20mA	0-10V	ON		ON			ON								ON		ON		
☐	4-20mA	+/- 10V	ON		ON			ON			ON					ON		ON	ON	
☐	4-20mA	0-20mA	ON		ON			ON								ON		ON		
☐	4-20mA	4-20mA	ON		ON			ON					ON		ON	ON				
☐																				

Revision	2.0	Drawn by	SST
Date	19.01.17	Dr.ch.by	FMa
File:	ANWAA4185		

10-MGD BaNa4
WAA0004185
DANANG / VIETNAM

Doppelmayr ®
Innova Patent GmbH
A-6960 WOLFURT / AUSTRIA

ANALOG IN/OUTPUT PLC (ST)

DRIVE STATION | LV-CONTROL

=A1+01

Date	10.05.17
Sheet :	261
Cont.sheet:	262

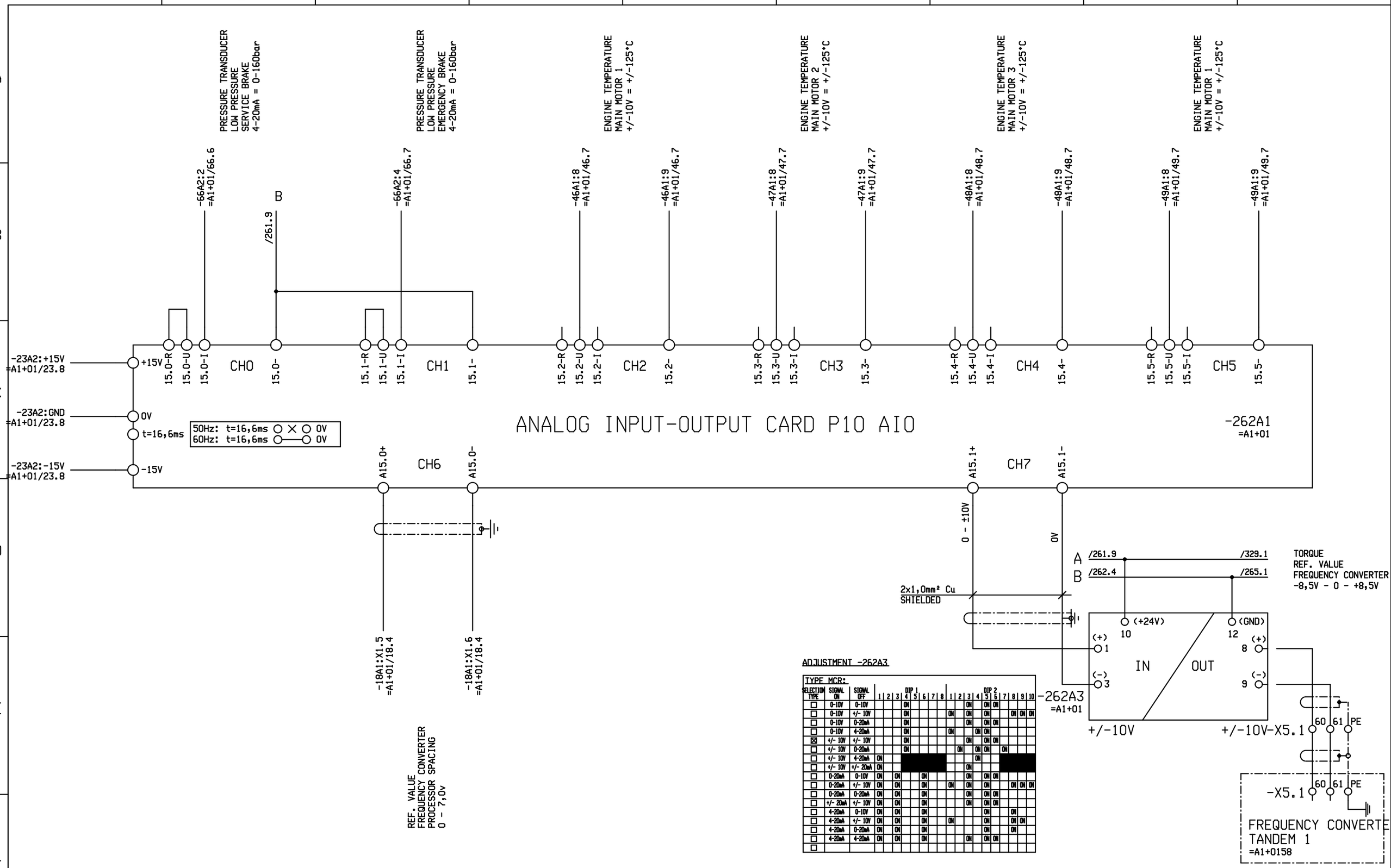

ADJUSTMENT -262A3

TYPE MCR:

SELECTION TYPE	SIGNAL ON	SIGNAL OFF	DIP 1 1	2	3	4	5	6	7	8	DIP 2 1	2	3	4	5	6	7	8	9	10
☐	0-10V	0-10V				ON							ON		ON	ON				
☐	0-10V	+/- 10V				ON						ON		ON		ON		ON	ON	ON
☐	0-10V	0-20mA				ON							ON		ON	ON				
☐	0-10V	4-20mA				ON						ON		ON	ON					
☒	+/- 10V	+/- 10V				ON							ON		ON	ON				
☐	+/- 10V	0-20mA				ON						ON		ON	ON		ON			
☐	+/- 10V	4-20mA	ON											ON						
☐	+/- 10V	+/- 20mA	ON										ON							
☐	0-20mA	0-10V	ON		ON			ON					ON			ON	ON			
☐	0-20mA	+/- 10V	ON		ON			ON				ON		ON				ON	ON	ON
☐	0-20mA	0-20mA	ON		ON			ON					ON		ON	ON				
☐	+/- 20mA	+/- 10V	ON		ON			ON					ON		ON	ON				
☐	4-20mA	0-10V	ON		ON			ON							ON			ON		
☐	4-20mA	+/- 10V	ON		ON			ON				ON				ON		ON	ON	
☐	4-20mA	0-20mA	ON		ON			ON								ON		ON		
☐	4-20mA	4-20mA	ON		ON			ON					ON		ON	ON				
☐																				

Revision	2.0	Drawn by	SST
Date	19.01.17	Dr.ch.by	FMa
File:	ANWAA4185		

10-MGD BaNa4
WAA0004185
DANANG / VIETNAM

Doppelmayr ®
Innova Patent GmbH
A-6960 WOLFURT / AUSTRIA

ANALOG IN/OUTPUT PLC (ST)

DRIVE STATION | LV-CONTROL

=A1+01

Date	10.05.17
Sheet :	262
Cont.sheet:	263

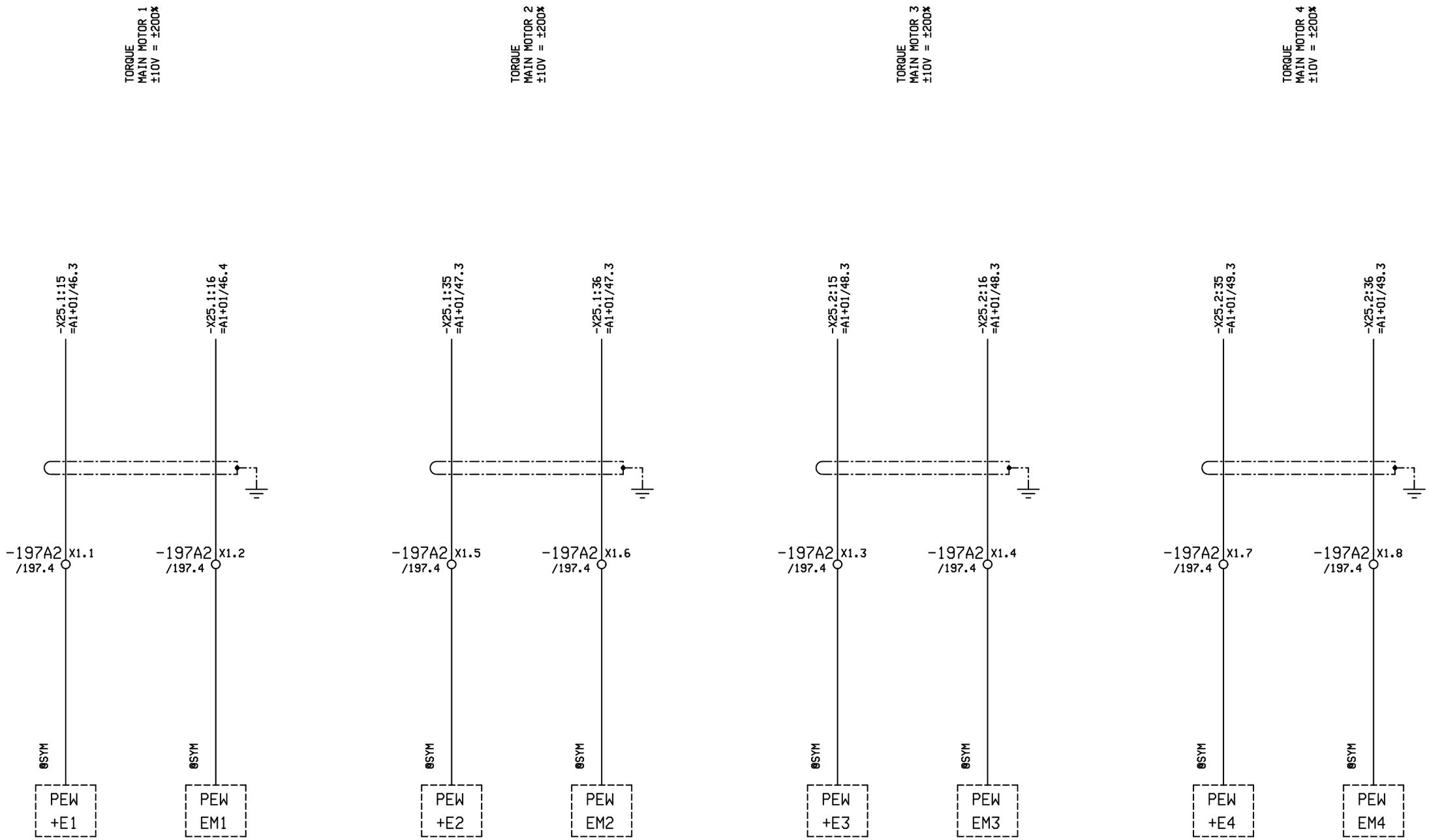

Revision	2.0	Drawn by	SST
Date	19.01.17	Dr.ch.by	FMa
File:	ANWAA4185		

10-MGD BaNa4
WAA0004185
DANANG / VIETNAM

Doppelmayr ®
Innova Patent GmbH
A-6960 WOLFURT / AUSTRIA

ANALOG INPUT TERMINAL BECKHOFF - TORQUE MOTOR

DRIVE STATION | LV-CONTROL

=A1+01

Date	10.05.17
Sheet :	263
Cont.sheet:	265

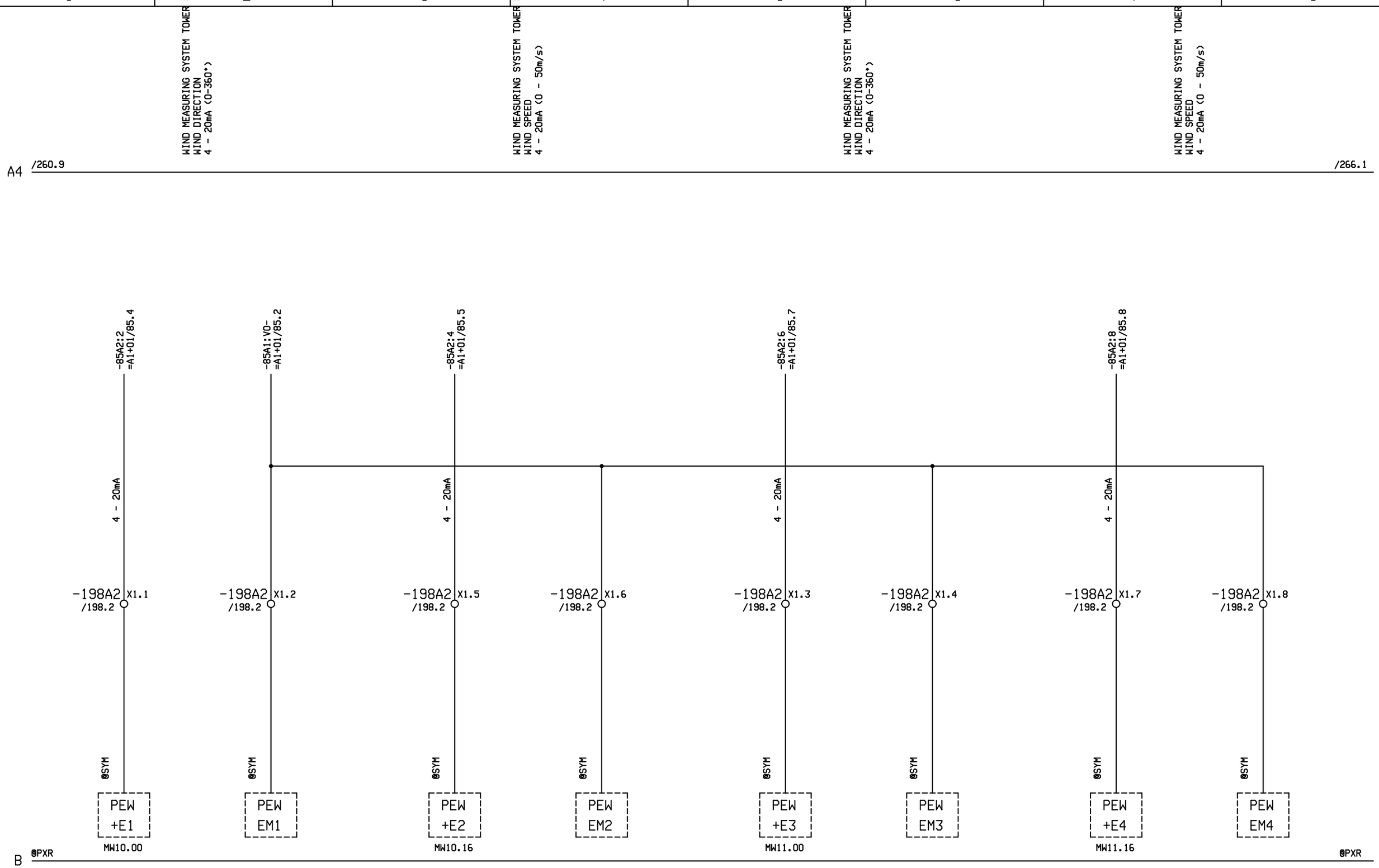

Revision	2.0	Drawn by	SST
Date	19.01.17	Dr.ch.by	FMa
File:	ANWAA4185		

10-MGD BaNa4
WAA0004185
DANANG / VIETNAM

Doppelmayr ®
Innova Patent GmbH
A-6960 WOLFURT / AUSTRIA

ANALOG INPUT TERMINAL BECKHOFF WIND MEASURING SYSTEM

DRIVE STATION | LV-CONTROL

=A1+01

Date	10.05.17
Sheet :	265
Cont.sheet:	266

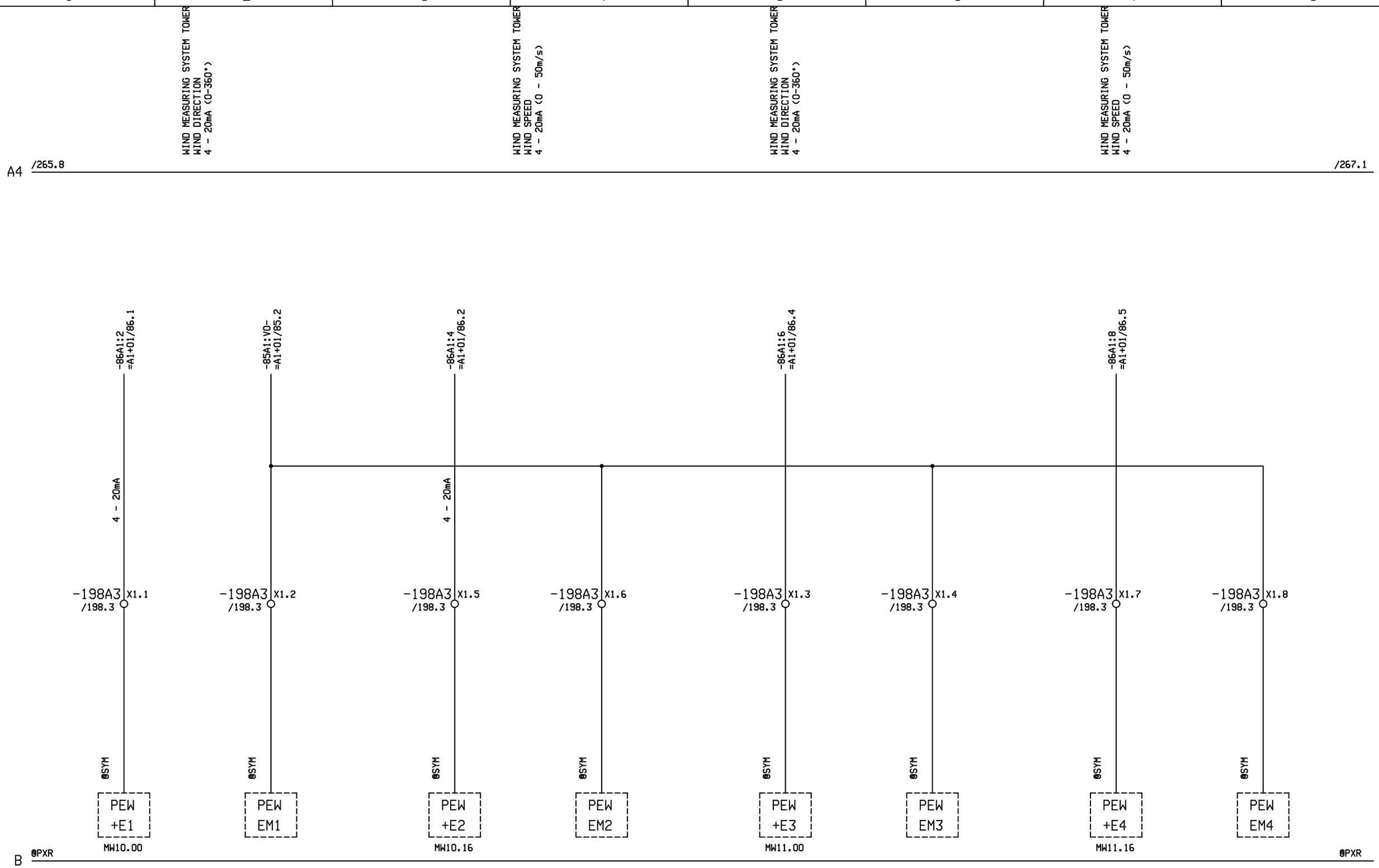

Revision	2.0	Drawn by	SST
Date	19.01.17	Dr.ch.by	FMa
File:	ANWAA4185		

10-MGD BaNa4
WAA0004185
DANANG / VIETNAM

Doppelmayr ®
Innova Patent GmbH
A-6960 WOLFURT / AUSTRIA

ANALOG INPUT TERMINAL BECKHOFF WIND MEASURING SYSTEM

DRIVE STATION | LV-CONTROL

=A1+01

Date	10.05.17
Sheet :	266
Cont.sheet:	267

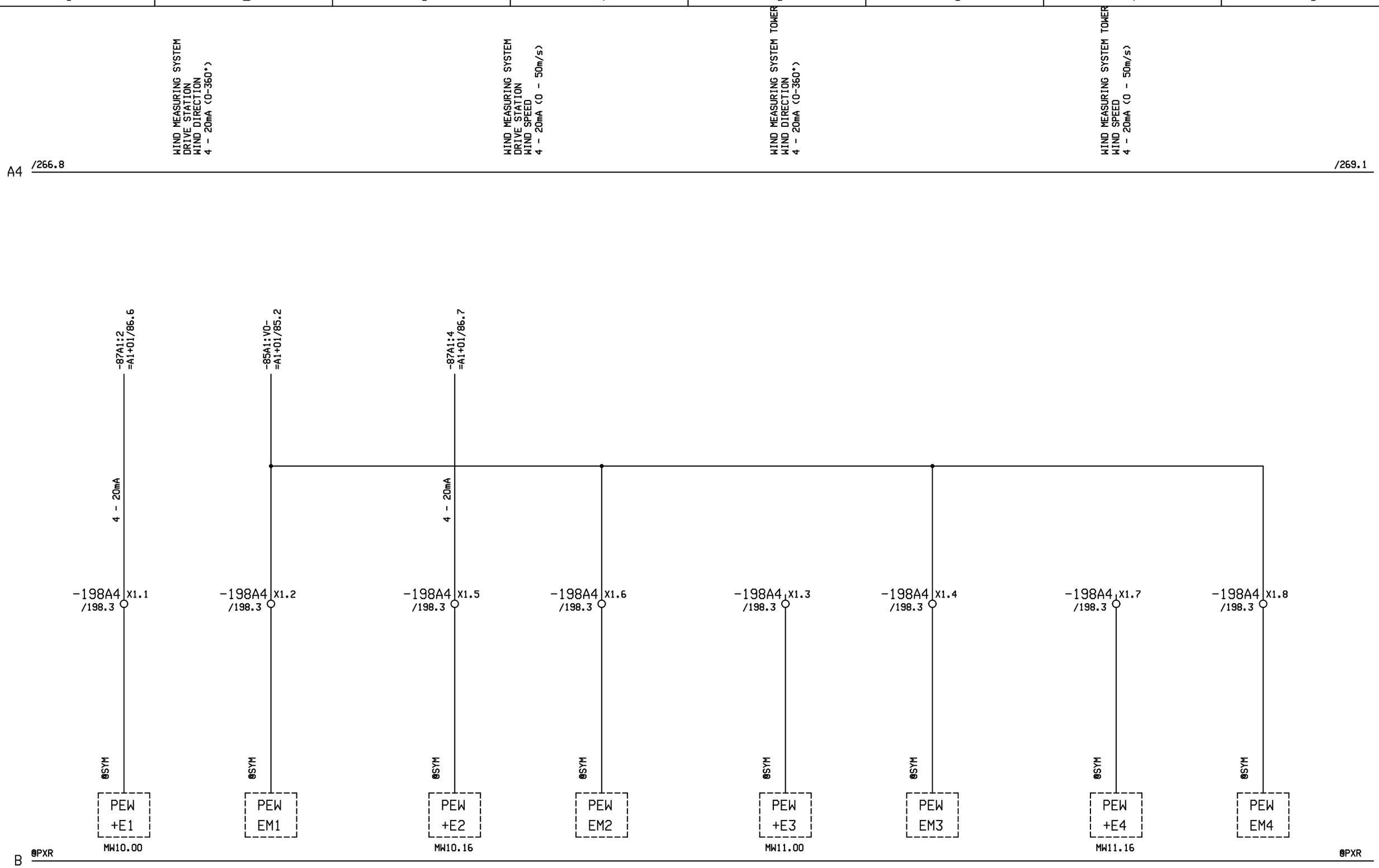

Revision	2.0	Drawn by	SST
Date	19.01.17	Dr.ch.by	FMa

File: ANWAA4185

10-MGD BaNa4
WAA0004185
DANANG / VIETNAM

Doppelmayr ®
Innova Patent GmbH
A-6960 WOLFURT / AUSTRIA

ANALOG INPUT TERMINAL BECKHOFF WIND MEASURING SYSTEM

DRIVE STATION | LV-CONTROL

=A1+01

Date	11.05.17
Sheet :	267
Cont.sheet:	269

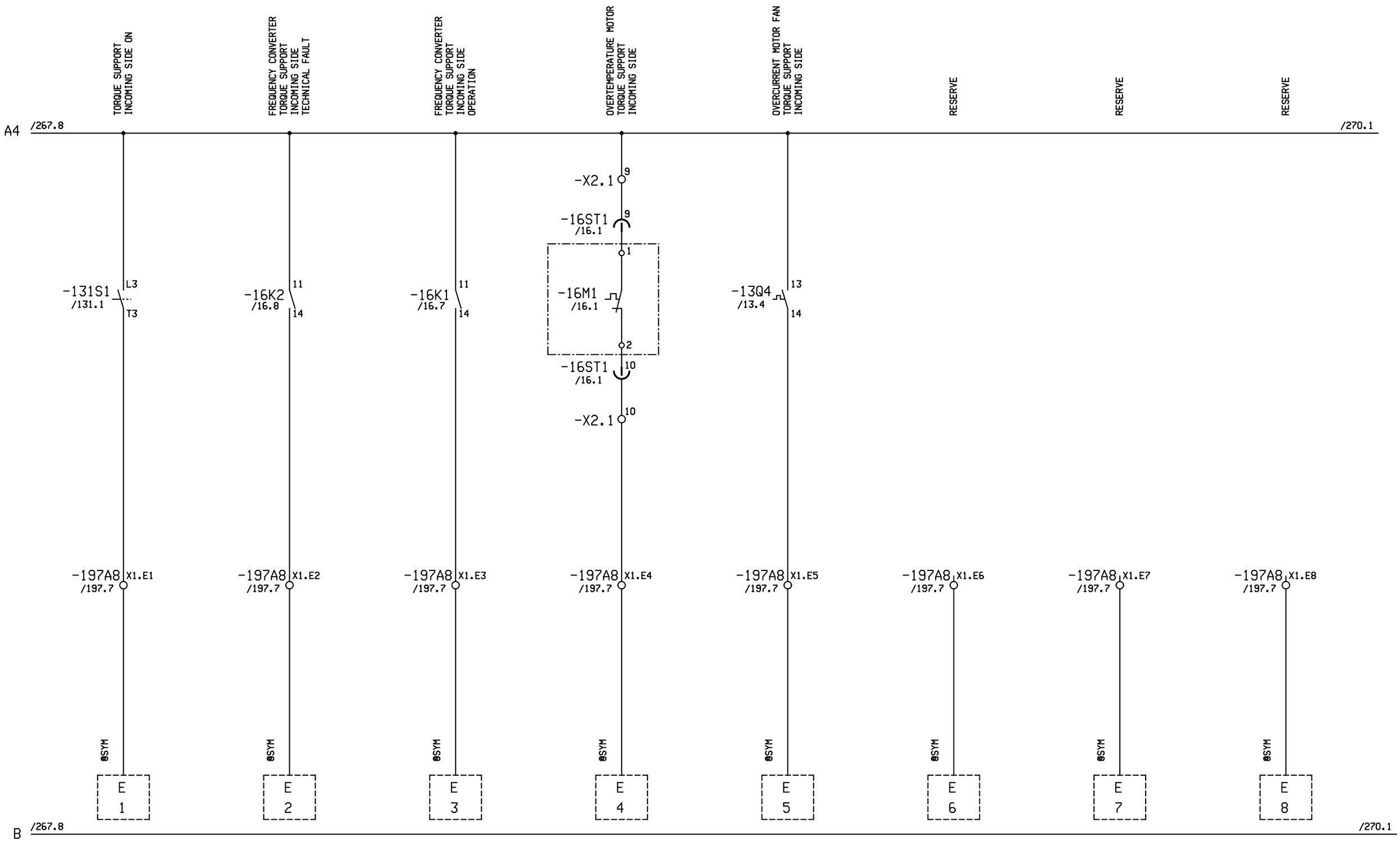

Revision	2.0	Drawn by	SST
Date	19.01.17	Dr.ch.by	FMa
File:	ANWAA4185		

10-MGD BaNa4
WAA0004185
DANANG / VIETNAM

Doppelmayr ®
Innova Patent GmbH
A-6960 WOLFURT / AUSTRIA

INPUT PLC BECKHOFF - TORQUE SUPPORT INCOMING

DRIVE STATION | LV-CONTROL

=A1+01

Date	11.05.17
Sheet :	269
Cont.sheet:	270

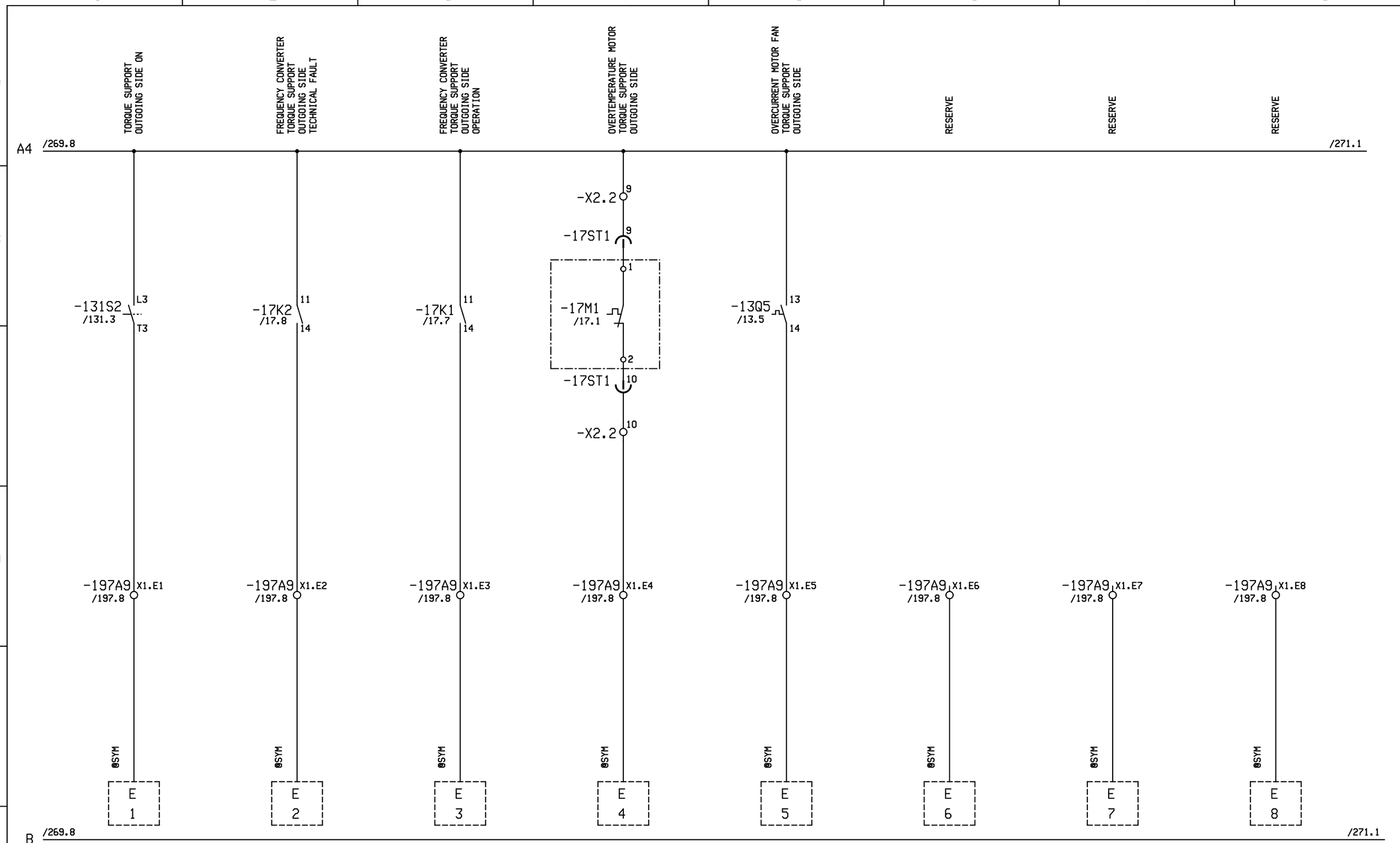

Revision	2.0	Drawn by	SST
Date	19.01.17	Dr.ch.by	FMa
File:	ANWAA4185		

10-MGD BaNa4
WAA0004185
DANANG / VIETNAM

Doppelmayr ®
Innova Patent GmbH
A-6960 WOLFURT / AUSTRIA

INPUT PLC BECKHOFF - TORQUE SUPPORT OUTGOING

DRIVE STATION | LV-CONTROL

=A1+01

Date	11.05.17
Sheet :	270
Cont.sheet:	271

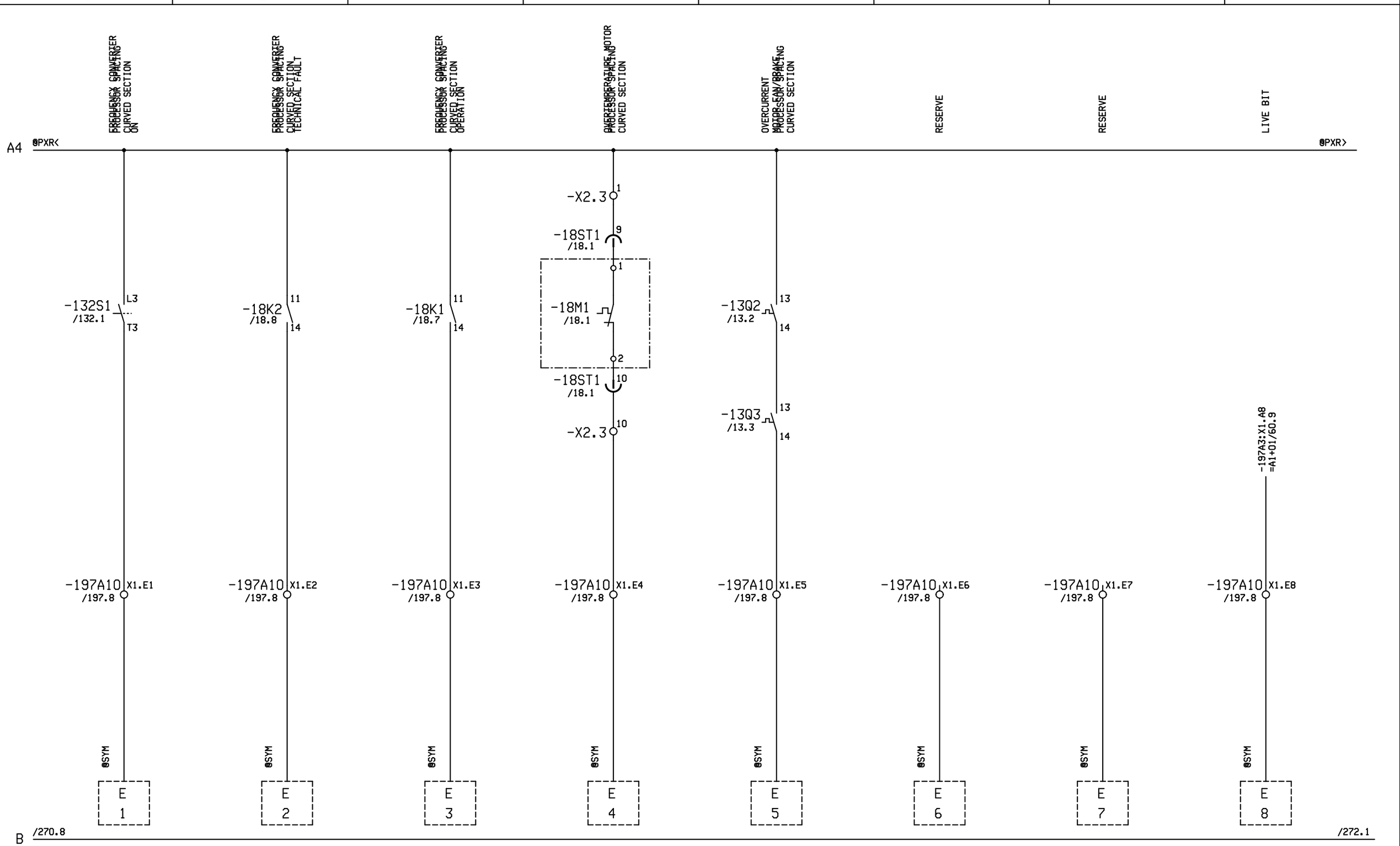

Revision	2.0	Drawn by	SST
Date	19.01.17	Dr.ch.by	FMa
File:	ANWAA4185		

10-MGD BaNa4
WAA0004185
DANANG / VIETNAM

Doppelmayr ®
Innova Patent GmbH
A-6960 WOLFURT / AUSTRIA

INPUT PLC BECKHOFF - PROCESSOR SPACING CURVED SECTION

DRIVE STATION | LV-CONTROL

=A1+01

Date	11.05.17
Sheet :	271
Cont.sheet:	272

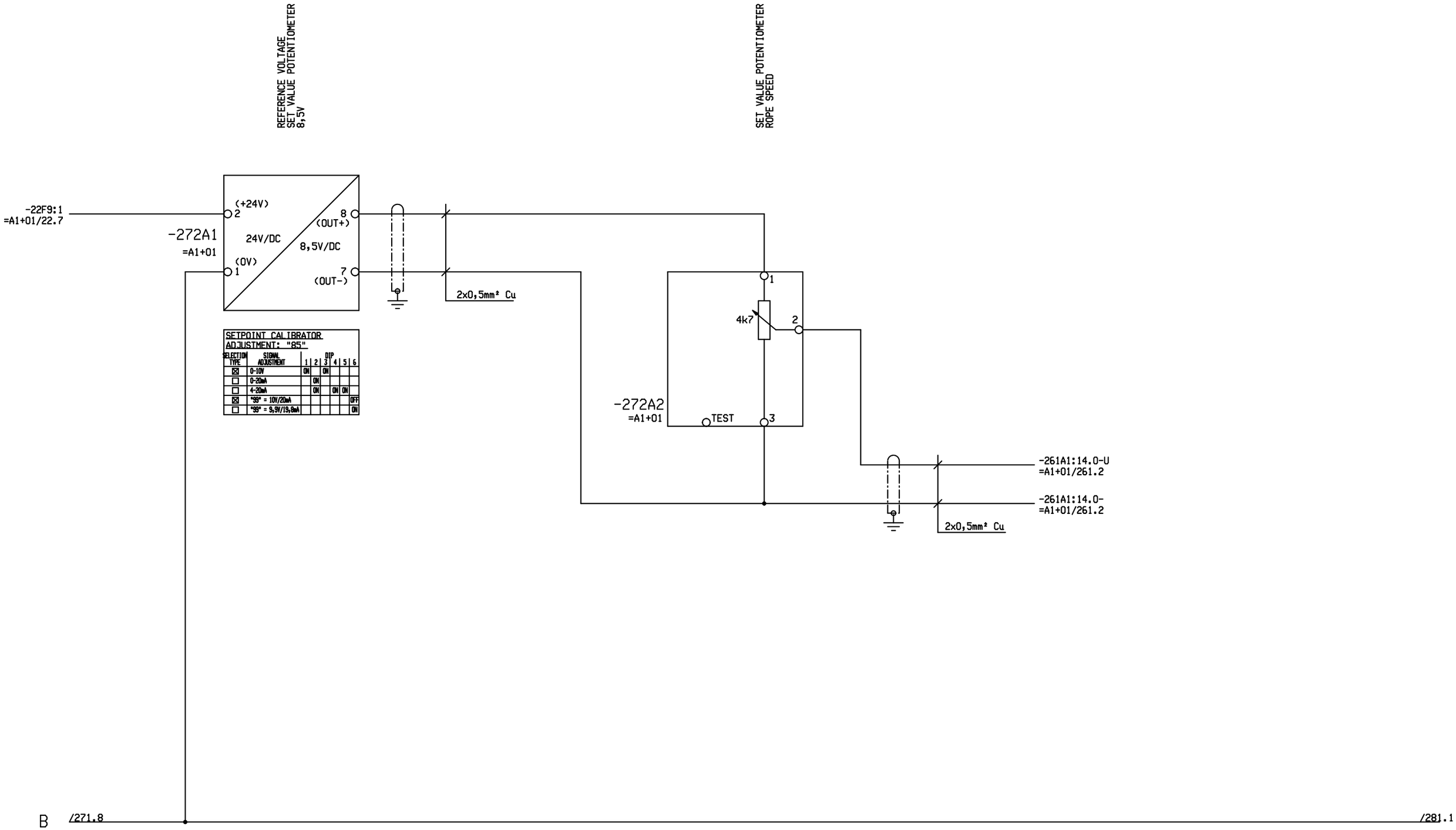

SETPOINT CALIBRATOR
ADJUSTMENT: "85"

SELECTION TYPE	SIGNAL ADJUSTMENT	DIP 1	2	3	4	5	6
☒	0-10V	ON		ON			
☐	0-20mA		ON				
☐	4-20mA		ON		ON	ON	
☒	"99" = 10V/20mA						OFF
☐	"99" = 9,9V/19,8mA						ON

Revision	2.0	Drawn by	SST
Date	19.01.17	Dr.ch.by	FMa
File:	ANWAA4185		

10-MGD BaNa4
WAA0004185
DANANG / VIETNAM

Doppelmayr ®
Innova Patent GmbH
A-6960 WOLFURT / AUSTRIA

SET VALUE POTENTIOMETER

DRIVE STATION | LV-CONTROL

=A1+01

Date	11.05.17
Sheet :	272
Cont.sheet:	281

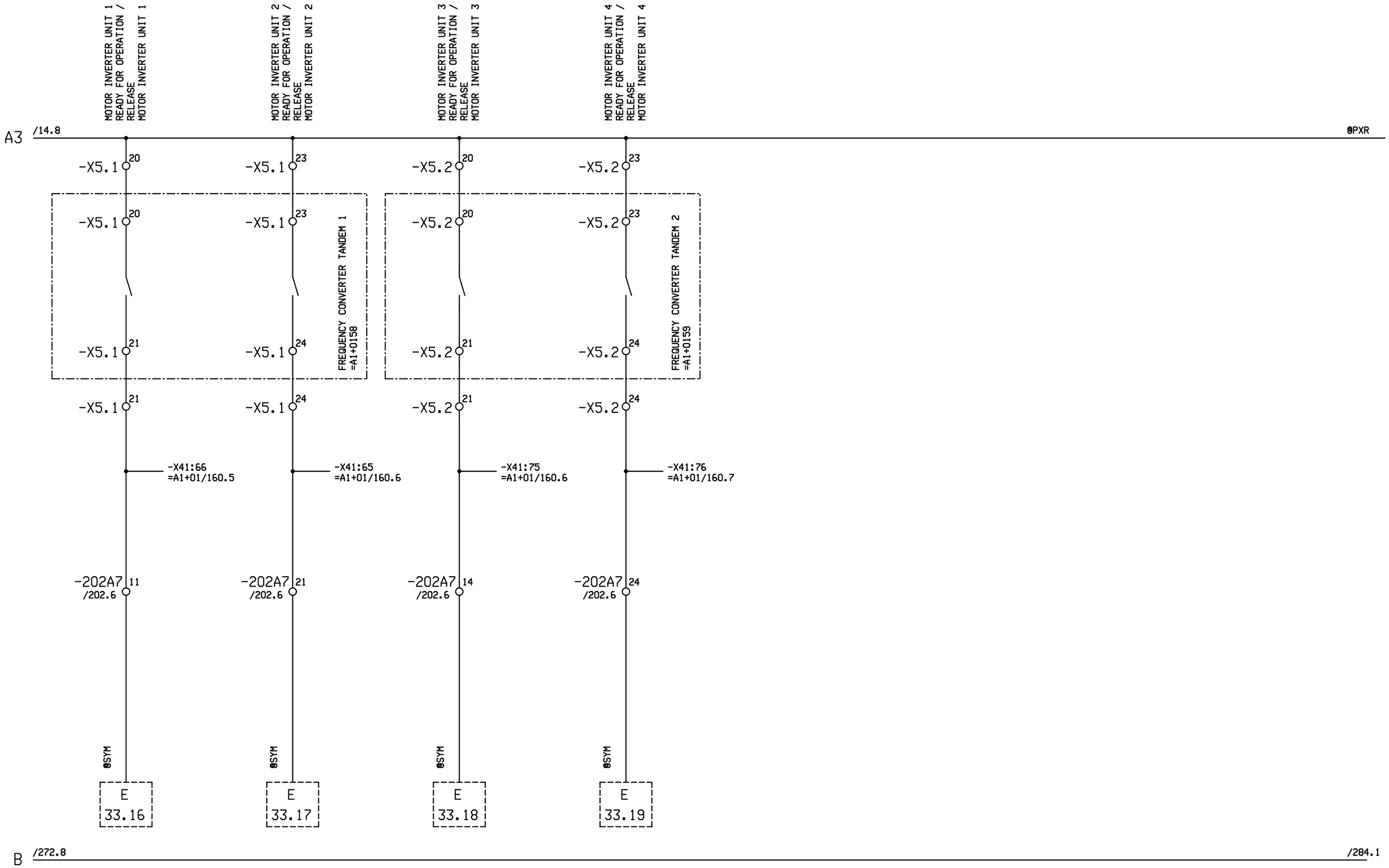

Revision	2.0	Drawn by	SST
Date	19.01.17	Dr.ch.by	FMa
File:	ANWAA4185		

10-MGD BaNa4
WAA0004185
DANANG / VIETNAM

Doppelmayr ®
Innova Patent GmbH
A-6960 WOLFURT / AUSTRIA

SAFETYBUS EXTENSION E33.16 - E33.19 - TYRE CONVEYOR

DRIVE STATION | LV-CONTROL

=A1+01

Date	11.05.17
Sheet :	281
Cont.sheet:	284

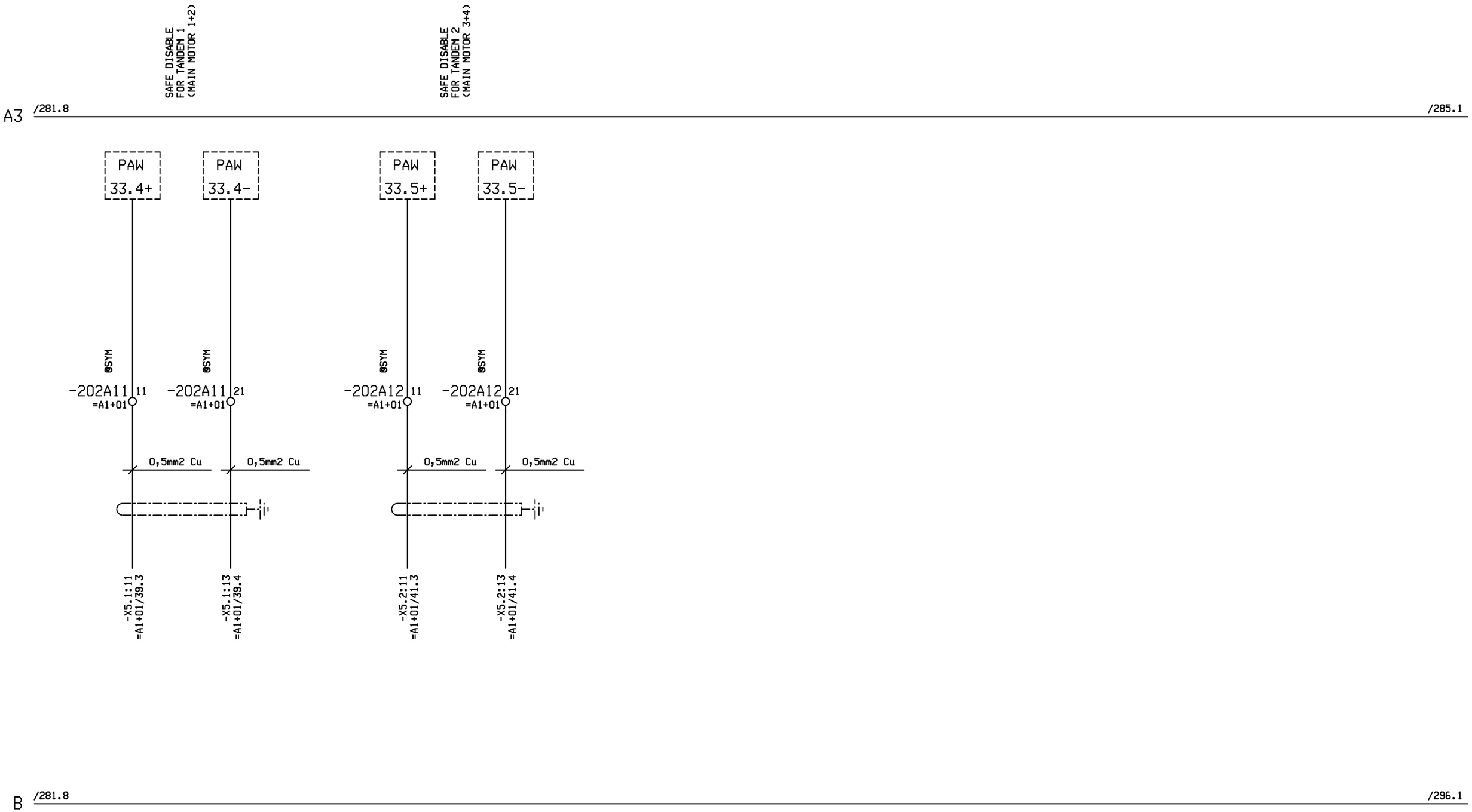

Revision	2.0	Drawn by	SST	10-MGD BaNa4 WAA0004185 DANANG / VIETNAM	Doppelmayr ® Innova Patent GmbH A-6960 WOLFURT / AUSTRIA	SAFETYBUS EXTENSION PAW 33.xx	=A1+01
Date	19.01.17	Dr.ch.by	FMa				Date 11.05.17
File:	ANWAA4185					DRIVE STATION / LV-CONTROL	Sheet : 284
							Cont.sheet: 285

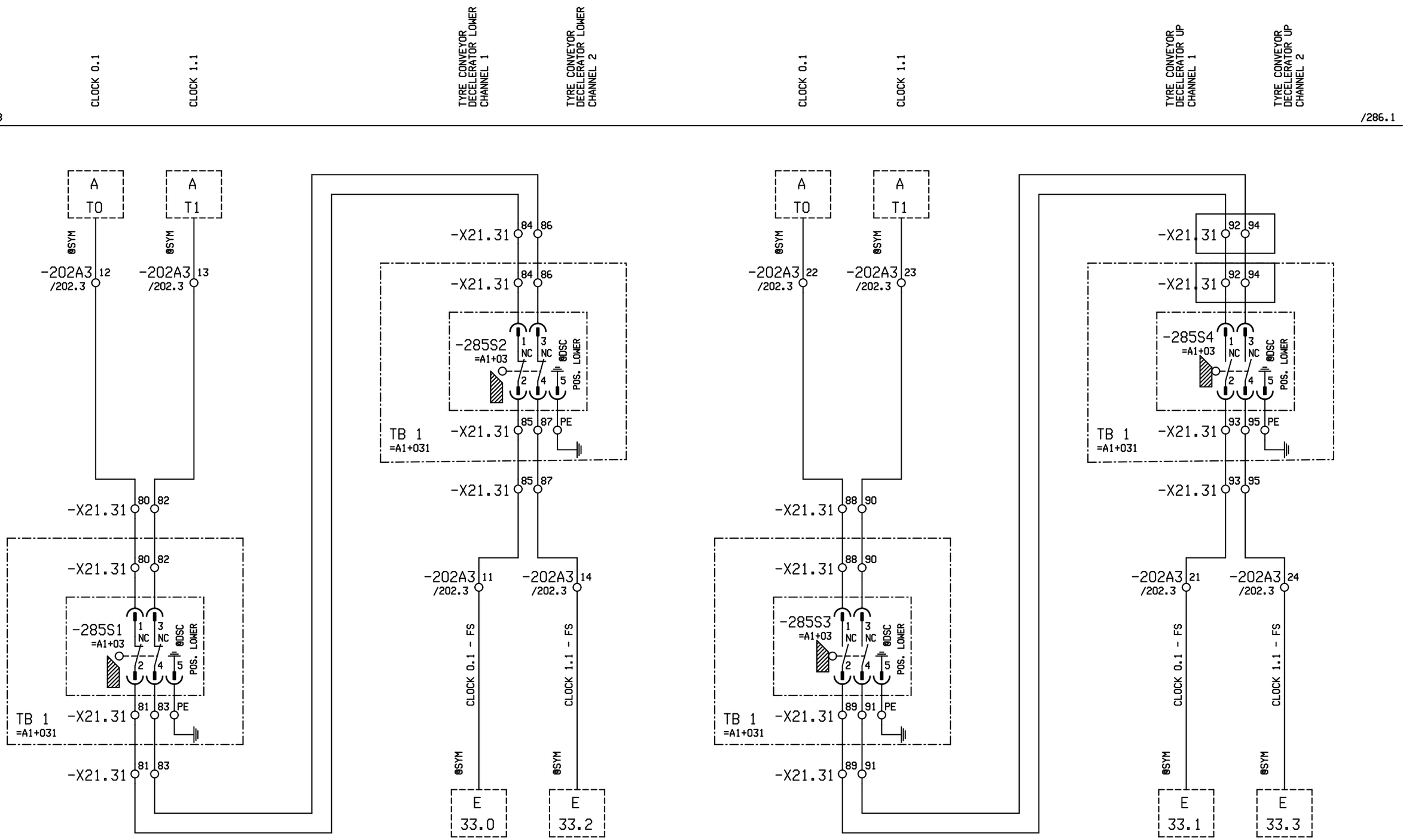

Revision	2.0	Drawn by	SST
Date	19.01.17	Dr.ch.by	FMa
File:	ANWAA4185		

10-MGD BaNa4
WAA0004185
DANANG / VIETNAM

Doppelmayr ®
Innova Patent GmbH
A-6960 WOLFURT / AUSTRIA

SAFETYBUS EXTENSION E33.0 - E33.3 - TYRE CONVEYOR

DRIVE STATION | LV-CONTROL

=A1+01

Date	11.05.17
Sheet :	285
Cont.sheet:	286

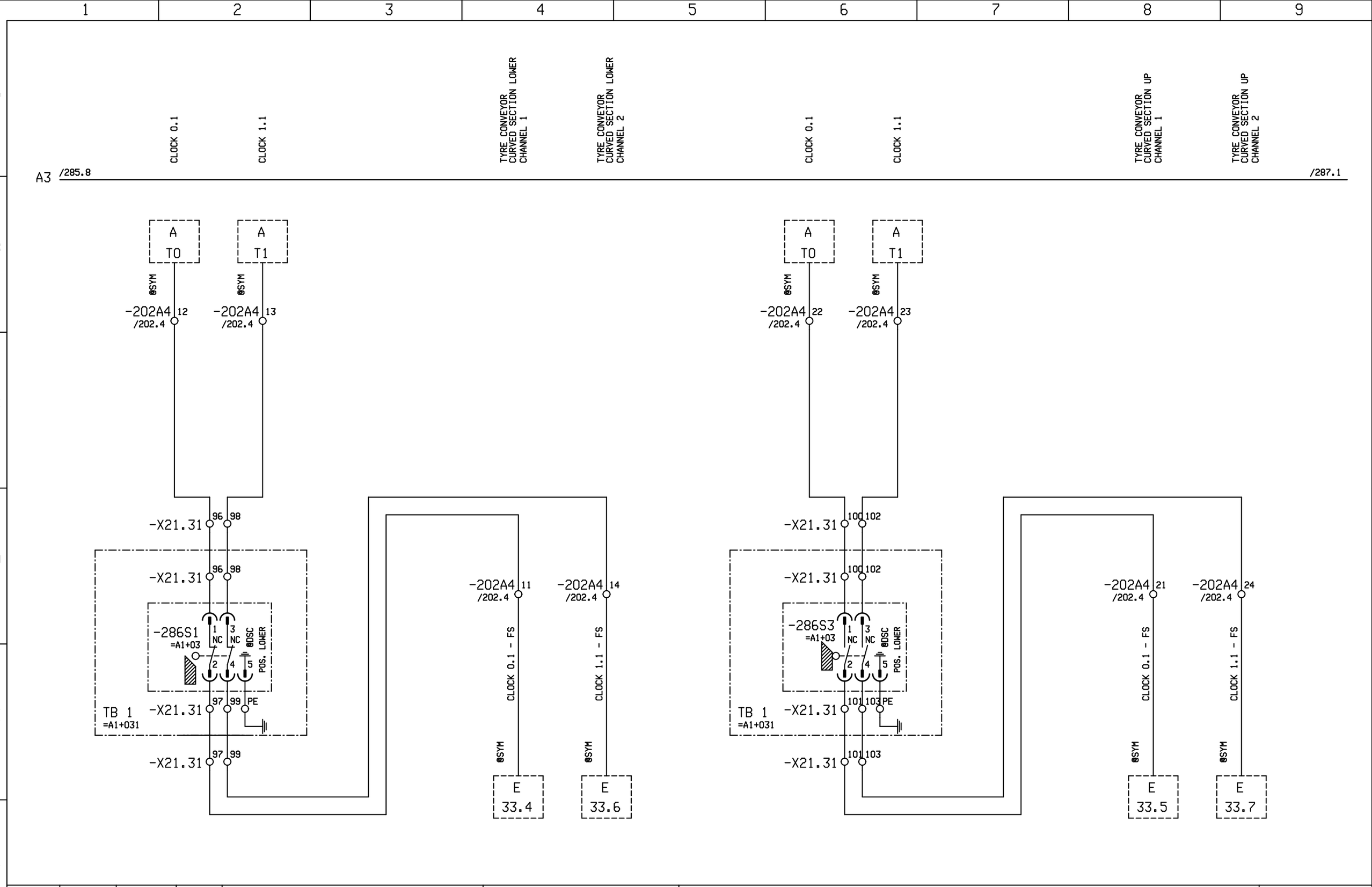

Revision	2.0	Drawn by	SST
Date	19.01.17	Dr.ch.by	FMa
File:	ANWAA4185		

10-MGD BaNa4
WAA0004185
DANANG / VIETNAM

Doppelmayr ®
Innova Patent GmbH
A-6960 WOLFURT / AUSTRIA

SAFETYBUS EXTENSION E33.4 - E33.7 - TYRE CONVEYOR

DRIVE STATION | LV-CONTROL

=A1+01

Date	11.05.17
Sheet :	286
Cont.sheet:	287

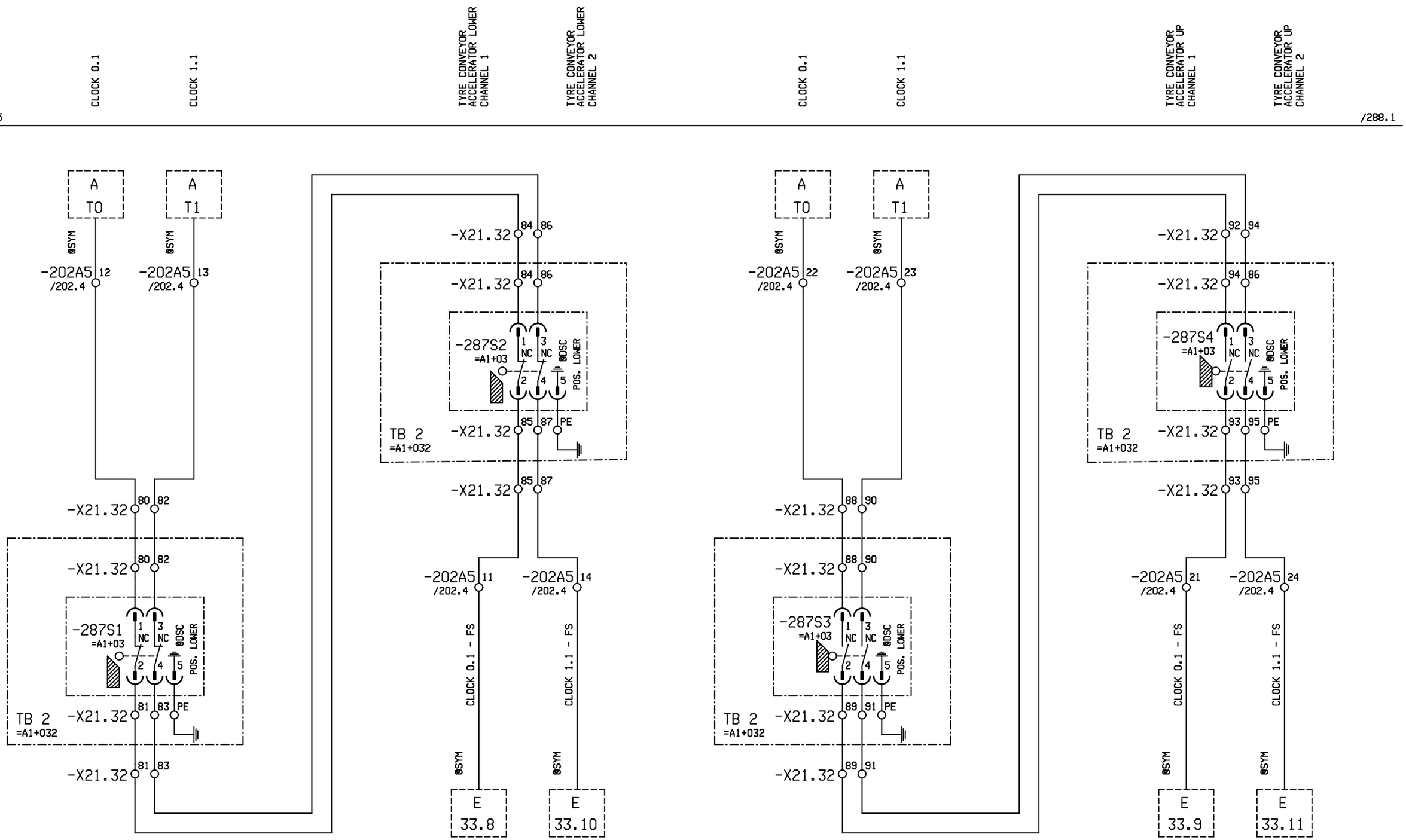

Revision	2.0	Drawn by	SST
Date	19.01.17	Dr.ch.by	FMa
File:	ANWAA4185		

10-MGD BaNa4
WAA0004185
DANANG / VIETNAM

Doppelmayr ®
Innova Patent GmbH
A-6960 WOLFURT / AUSTRIA

SAFETYBUS EXTENSION E33.8 - E33.11 - TYRE CONVEYOR

DRIVE STATION | LV-CONTROL

=A1+01

Date	11.05.17
Sheet :	287
Cont.sheet:	288

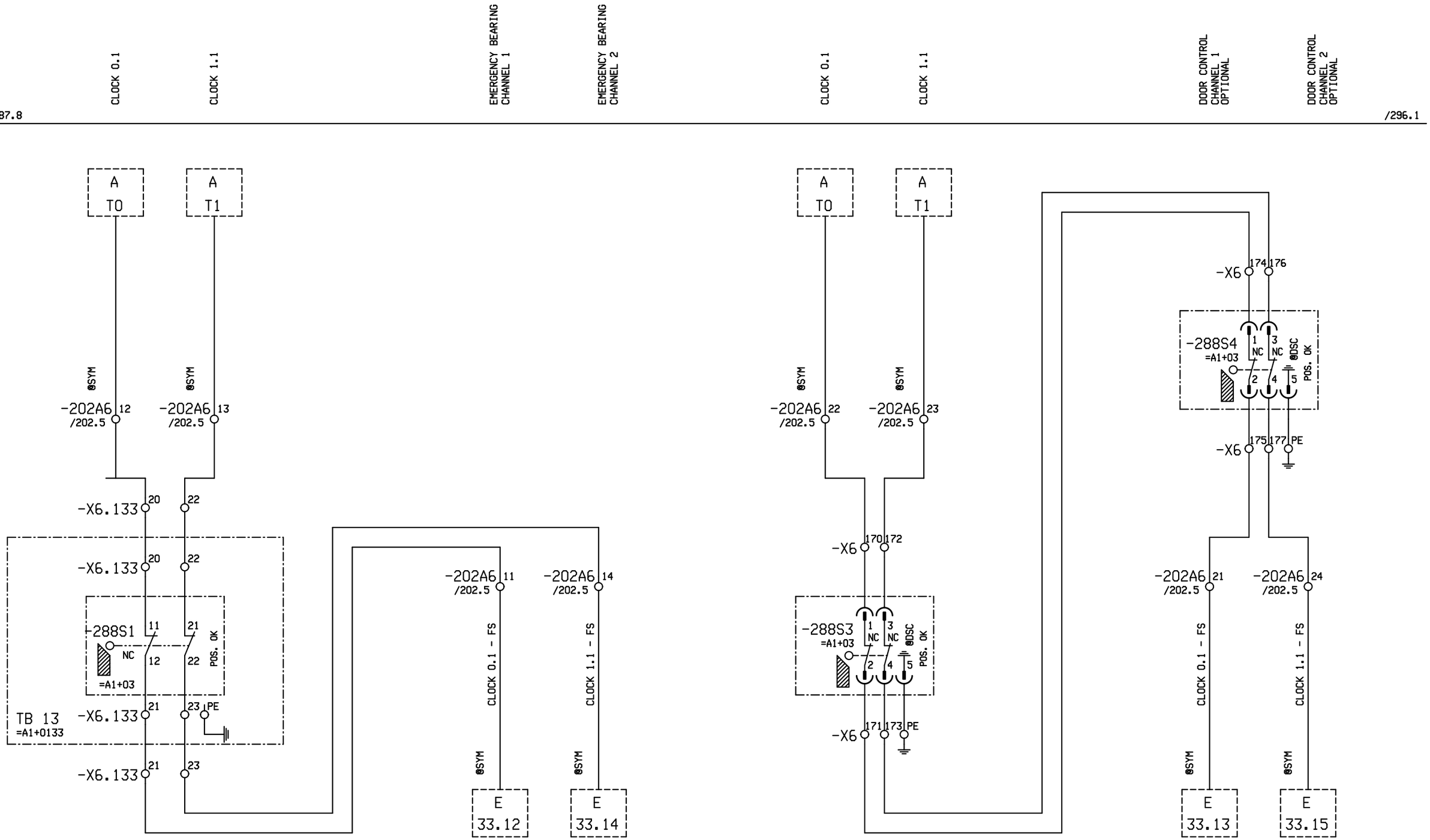

Revision	2.0	Drawn by	SST
Date	19.01.17	Dr.ch.by	FMa
File:	ANWAA4185		

10-MGD BaNa4
WAA0004185
DANANG / VIETNAM

Doppelmayr ®
Innova Patent GmbH
A-6960 WOLFURT / AUSTRIA

SAFETYBUS EXTENSION E33.4 - E33.7 - TYRE CONVEYOR

DRIVE STATION | LV-CONTROL

=A1+01

Date	11.05.17
Sheet :	288
Cont.sheet:	296

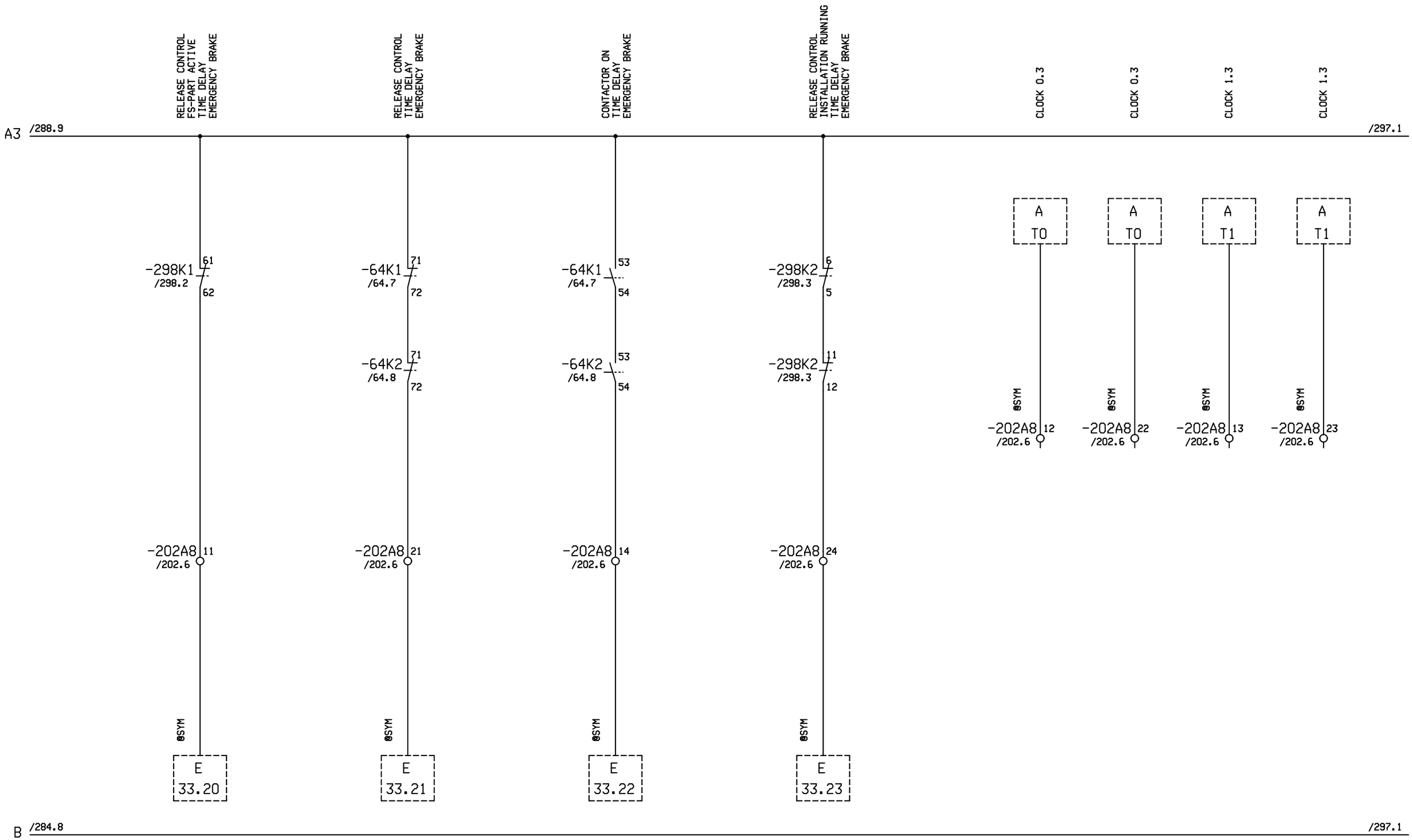

Revision	2.0	Drawn by	SST
Date	19.01.17	Dr.ch.by	FMa
File:	ANWAA4185		

10-MGD BaNa4
WAA0004185
DANANG / VIETNAM

Doppelmayr ®
Innova Patent GmbH
A-6960 WOLFURT / AUSTRIA

SAFETYBUS EXTENSION E33.20 - E33.23 - BRAKE CONTROL

DRIVE STATION | LV-CONTROL

=A1+01

Date	11.05.17
Sheet :	296
Cont.sheet:	297

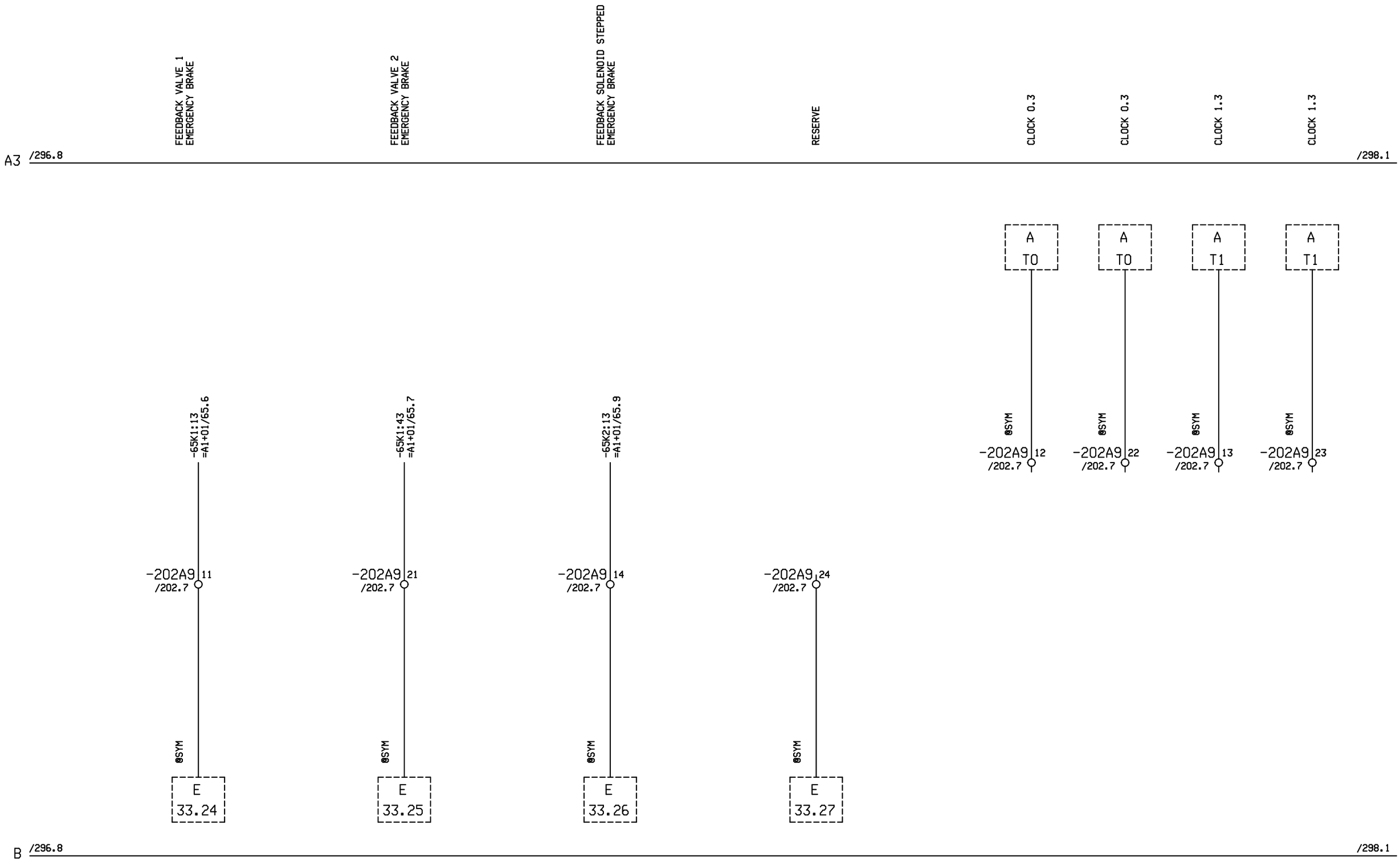

Revision	2.0	Drawn by	SST
Date	19.01.17	Dr.ch.by	FMa
File:	ANWAA4185		

10-MGD BaNa4
WAA0004185
DANANG / VIETNAM

Doppelmayr ®
Innova Patent GmbH
A-6960 WOLFURT / AUSTRIA

SAFETYBUS ERWEITERUNG E33.24 - E33.27 - BREMSSTEUERUNG

DRIVE STATION | LV-CONTROL

=A1+01

Date	11.05.17
Sheet :	297
Cont.sheet:	298

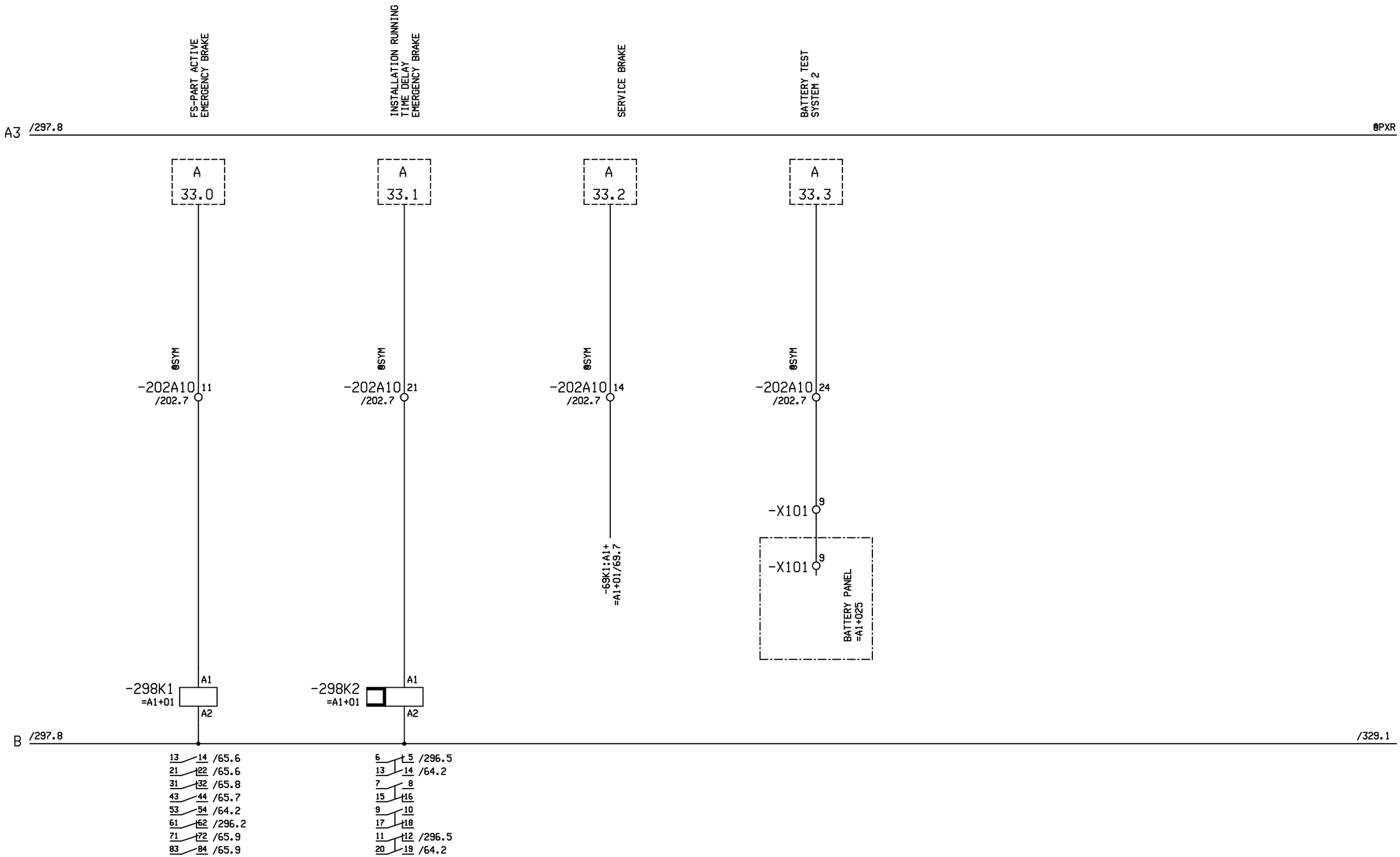

Revision	2.0	Drawn by	SST
Date	19.01.17	Dr.ch.by	FMa
File:	ANWAA4185		

10-MGD BaNa4
WAA0004185
DANANG / VIETNAM

Doppelmayr ®
Innova Patent GmbH
A-6960 WOLFURT / AUSTRIA

SAFETYBUS EXTENSION A33.22 - A33.25 - BRAKE CONTROL

DRIVE STATION | LV-CONTROL

=A1+01

Date	11.05.17
Sheet :	298
Cont.sheet:	328

A-DQ(ZN)(BN)2Y 6x4E9/125 FIBRE OPTIC SINGLEMODE WITH CONNECTOR
CONNECTIONS DRIVE STATION - RETURN STATION

ON LINE
=A1+06

TERMINAL BOX
FIBER OPTIC CABLE - FIBER PATCH
STATION
=A1+070

ID=11438095

-328A2
=A1+070

SM-01. SM-02. SM-03. SM-04. SM-05. SM-06. SM-07. SM-08. SM-09. SM-10. SM-11. SM-12. SM-01 SM-02 SM-03 SM-04 SM-05 SM-06 SM-07 SM-08 SM-09 SM-10 SM-11 SM-12

SINGLEMODE

FIBER OPTIC CABLE - FIBER PATCH

@DSC

SINGLEMODE

SM-01 SM-02 SM-03 SM-04 SM-05 SM-06 SM-07 SM-08 SM-09 SM-10 SM-11 SM-12 MM-01 MM-02 MM-03 MM-04 MM-05 MM-06 MM-07 MM-08 MM-09 MM-10 MM-11 MM-12

CABLE
ST-SC LWL-DUPLEX
CONNECTION L=80M
ID=11438094

CABLE
ST-LC LWL-DUPLEX
CONNECTION L=80M
ID=11438093

CABLE
ST-ST LWL-DUPLEX
CONNECTION L=80M
ID=11438092

LC LC ST ST SC SC LC LC SC SC ST ST ST ST ST ST ST ST ST ST ST ST

-104A1:IN
=A1+01/104.3

-104A1:OUT
=A1+01/104.3

-103A1:FIBRE OPTIC OUT
/103.3

-103A3:FIBRE OPTIC IN
/103.8

-330A3:TD
=A1+01/330.8

-330A3:RD
=A1+01/330.8

SAFETYBUS
DST-->RST

FIBER OPTIC CABLE - CONVERTER
TRANSMITTER
RECEIVER
DST-->RST

ETHERNET
DST-->RST

RESERVE DOPPELMAYR

RESERVE DOPPELMAYR

RESERVE DOPPELMAYR

RESERVE

RESERVE

RESERVE

RESERVE

RESERVE

RESERVE

Revision	2.0	Drawn by	SST
Date	19.01.17	Dr.ch.by	FMa
File:	ANWAA4185		

10-MGD BaNa4
WAA0004185
DANANG / VIETNAM

Doppelmayr ®
Innova Patent GmbH
A-6960 WOLFURT / AUSTRIA

FIBER OPTIC CABLE - FIBER PATCH

DRIVE STATION | LV-CONTROL

=A1+01

Date	11.05.17
Sheet :	328
Cont.sheet:	329

A /262.9 /330.1

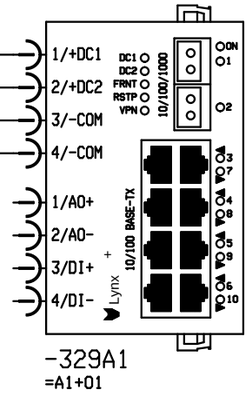

-329A1
=A1+01

-330A2:X8/RJ45
=A1+01/330.6

Ethernet

PLUG-IN
INTERNET

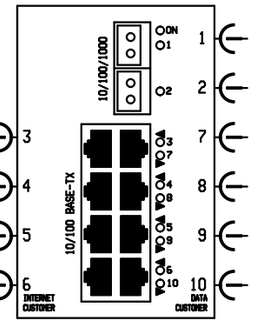

-329A1
/329.3

B /298.8 /330.1

Revision	2.0	Drawn by	SST
Date	19.01.17	Dr.ch.by	FMa
File:	ANWAA4185		

10-MGD BaNa4
WAA0004185
DANANG / VIETNAM

Doppelmayr ®
Innova Patent GmbH
A-6960 WOLFURT / AUSTRIA

MODEM

DRIVE STATION | LV-CONTROL

=A1+01

Date	06.04.16
Sheet :	329
Cont.sheet:	330

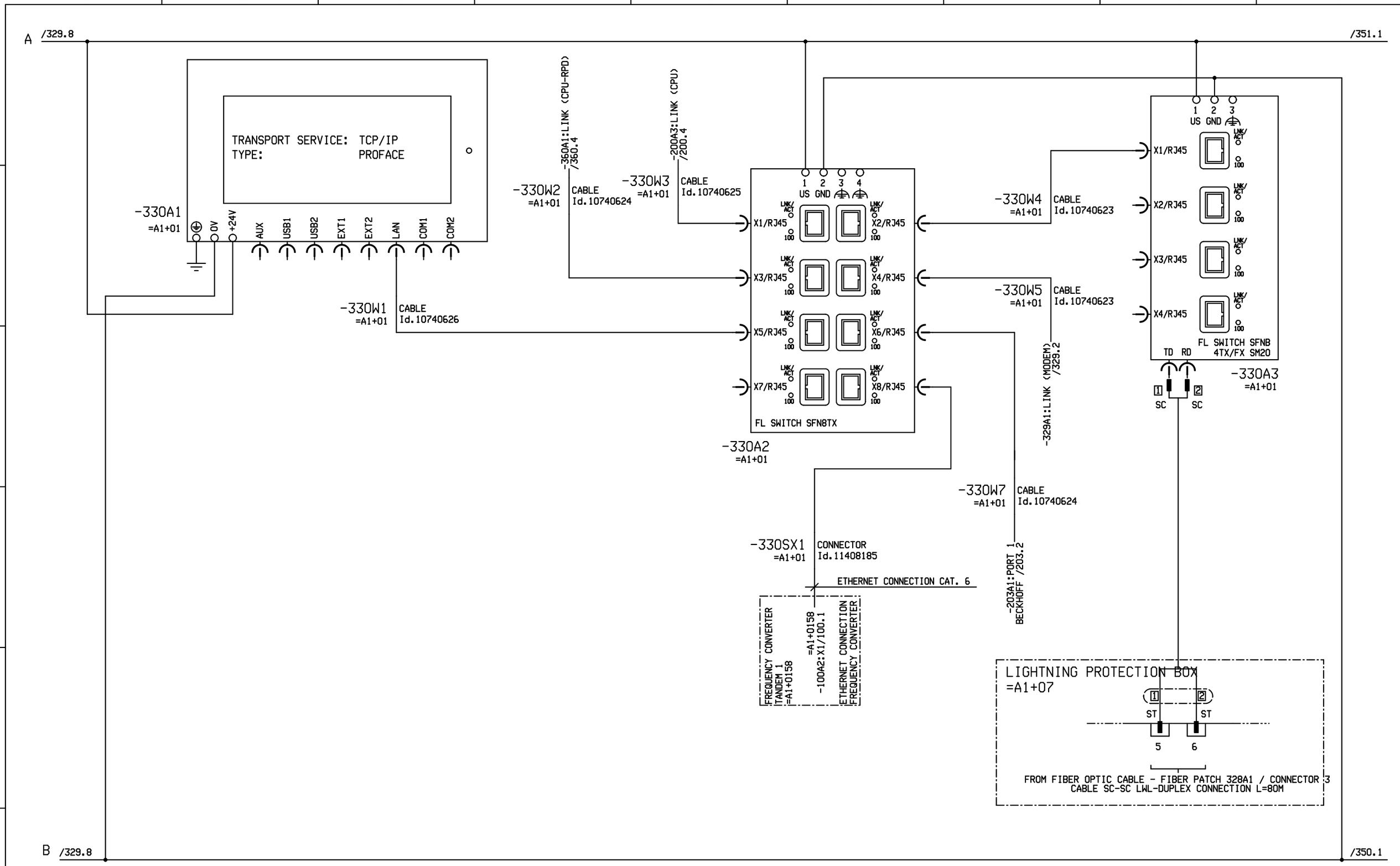

Revision	2.0	Drawn by	SST
Date	19.01.17	Dr.ch.by	FMa
File:	ANWAA4185		

10-MGD BaNa4
WAA0004185
DANANG / VIETNAM

Doppelmayr ®
Innova Patent GmbH
A-6960 WOLFURT / AUSTRIA

TOUCH SCREEN

DRIVE STATION | LV-CONTROL

=A1+01

Date	03.06.16
Sheet :	330
Cont.sheet:	350

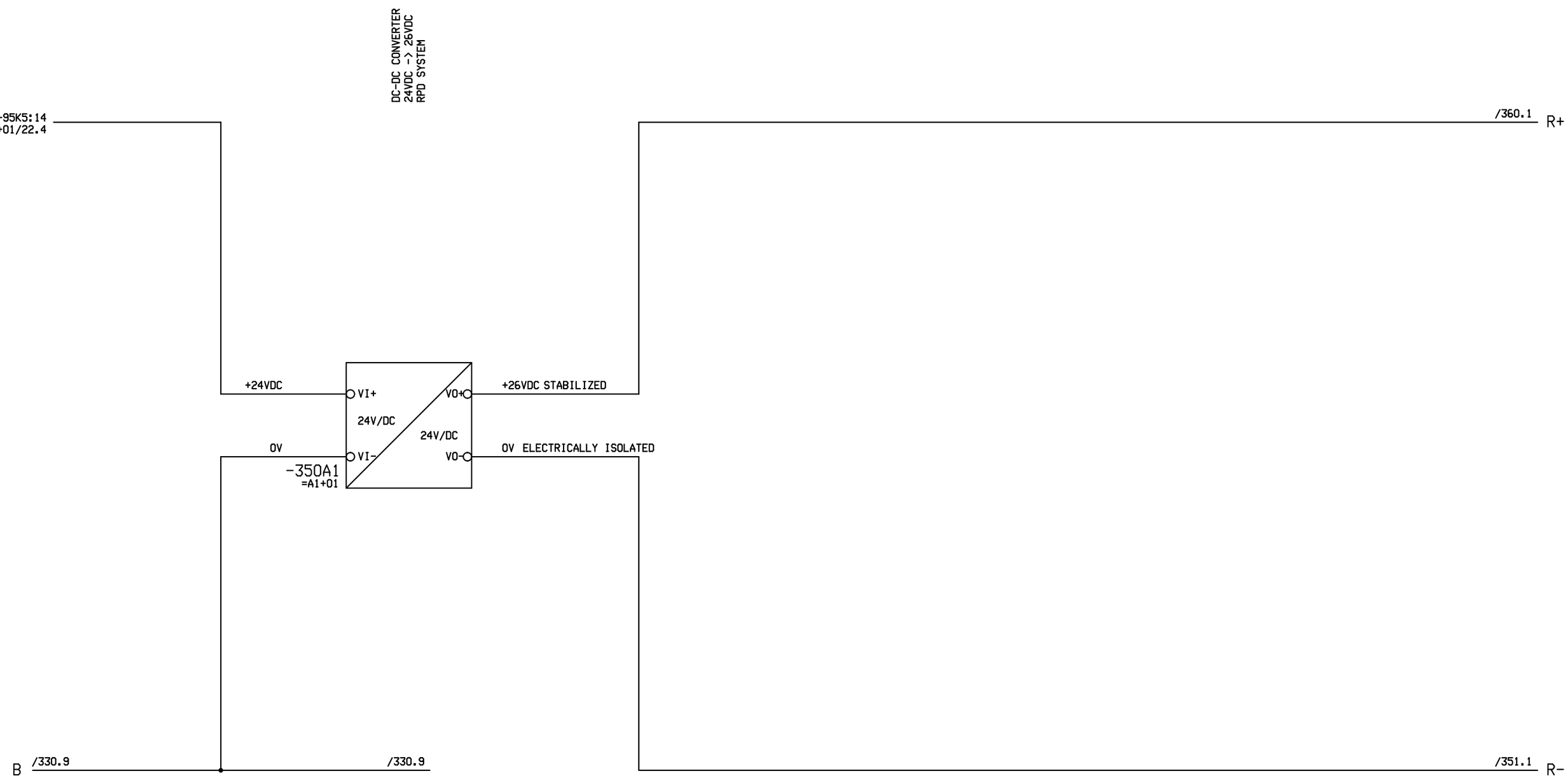

Revision	2.0	Drawn by	SST
Date	19.01.17	Dr.ch.by	FMa
File:	ANWAA4185		

10-MGD BaNa4
WAA0004185
DANANG / VIETNAM

Doppelmayr ®
Innova Patent GmbH
A-6960 WOLFURT / AUSTRIA

RPD SUPPLY VOLTAGE

DRIVE STATION | LV-CONTROL

=A1+01

Date	07.06.16
Sheet :	350
Cont.sheet:	351

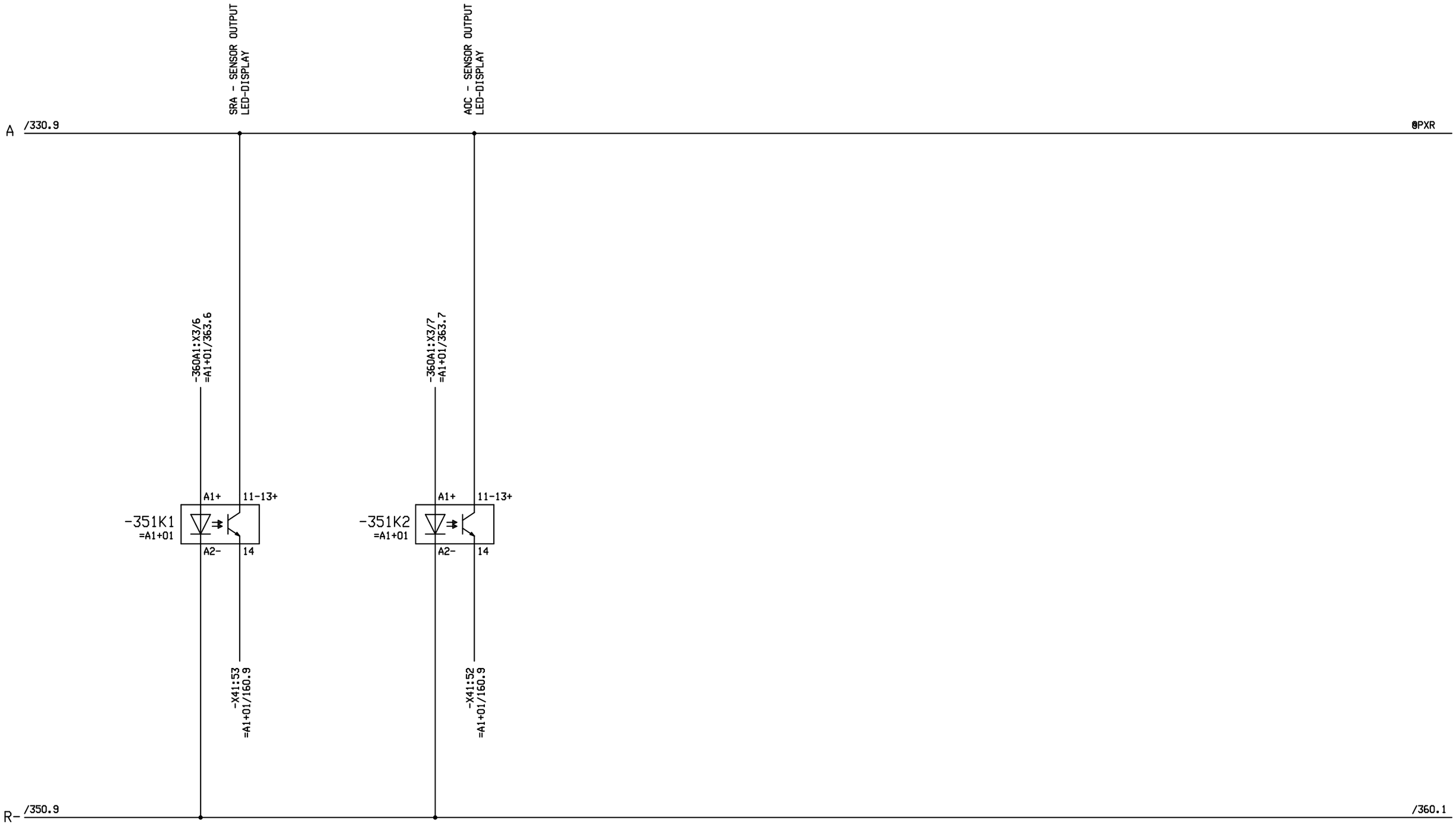

Revision	2.0	Drawn by	SST
Date	19.01.17	Dr.ch.by	FMa
File:	ANWAA4185		

10-MGD BaNa4
WAA0004185
DANANG / VIETNAM

Doppelmayr ®
Innova Patent GmbH
A-6960 WOLFURT / AUSTRIA

RPD RELAY

DRIVE STATION | LV-CONTROL

=A1+01

Date	01.04.16
Sheet :	351
Cont.sheet:	360

RPD SYSTEM
CENTRAL UNIT PSS3047

R+ /350.9 /361.1

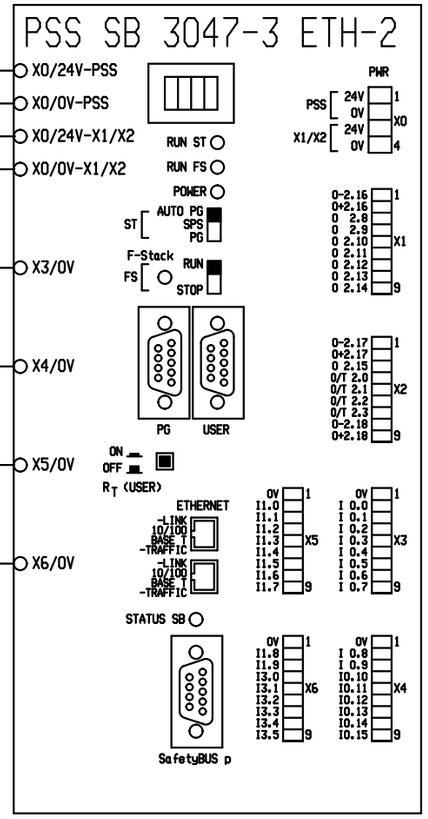

ETHERNET

-330A2:X3/RJ45
=A1+01/330.5

E 0.0 /363.1
E 0.1 /363.2
E 0.2 /363.3
E 0.3 /363.5
E 0.4 /363.6
E 0.5 /363.7
E 0.6 /363.8
E 0.7 /363.9
E 0.8
E 0.9
E 0.10
E 0.11
E 0.12
E 0.13
E 0.14
E 0.15
E 1.0
E 1.1
E 1.2
E 1.3
E 1.4
E 1.5
E 1.6
E 1.7
E 1.8
E 1.9
E 3.0
E 3.1
E 3.2
E 3.3
E 3.4
E 3.5
A 2.0 /361.7
A 2.1 /361.8
A 2.2
A 2.3
A 2.8 /361.3
A 2.9 /361.4
A 2.10
A 2.11
A 2.12
A 2.13
A 2.14 /361.9
A 2.15
A -2.16 /361.1
A +2.16 /361.2
A -2.17 /361.5
A +2.17 /361.6
A -2.18
A +2.18

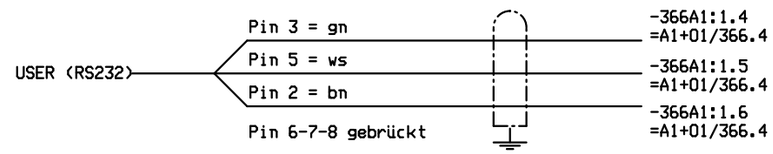

R- /351.9 /361.1

Revision	2.0	Drawn by	SST
Date	19.01.17	Dr.ch.by	FMa
File:	ANWAA4185		

10-MGD BaNa4
WAA0004185
DANANG / VIETNAM

Doppelmayr ®
Innova Patent GmbH
A-6960 WOLFURT / AUSTRIA

RPD CENTRAL UNIT PSS3047-3

DRIVE STATION | LV-CONTROL

=A1+01

Date	19.04.16
Sheet :	360
Cont.sheet:	361

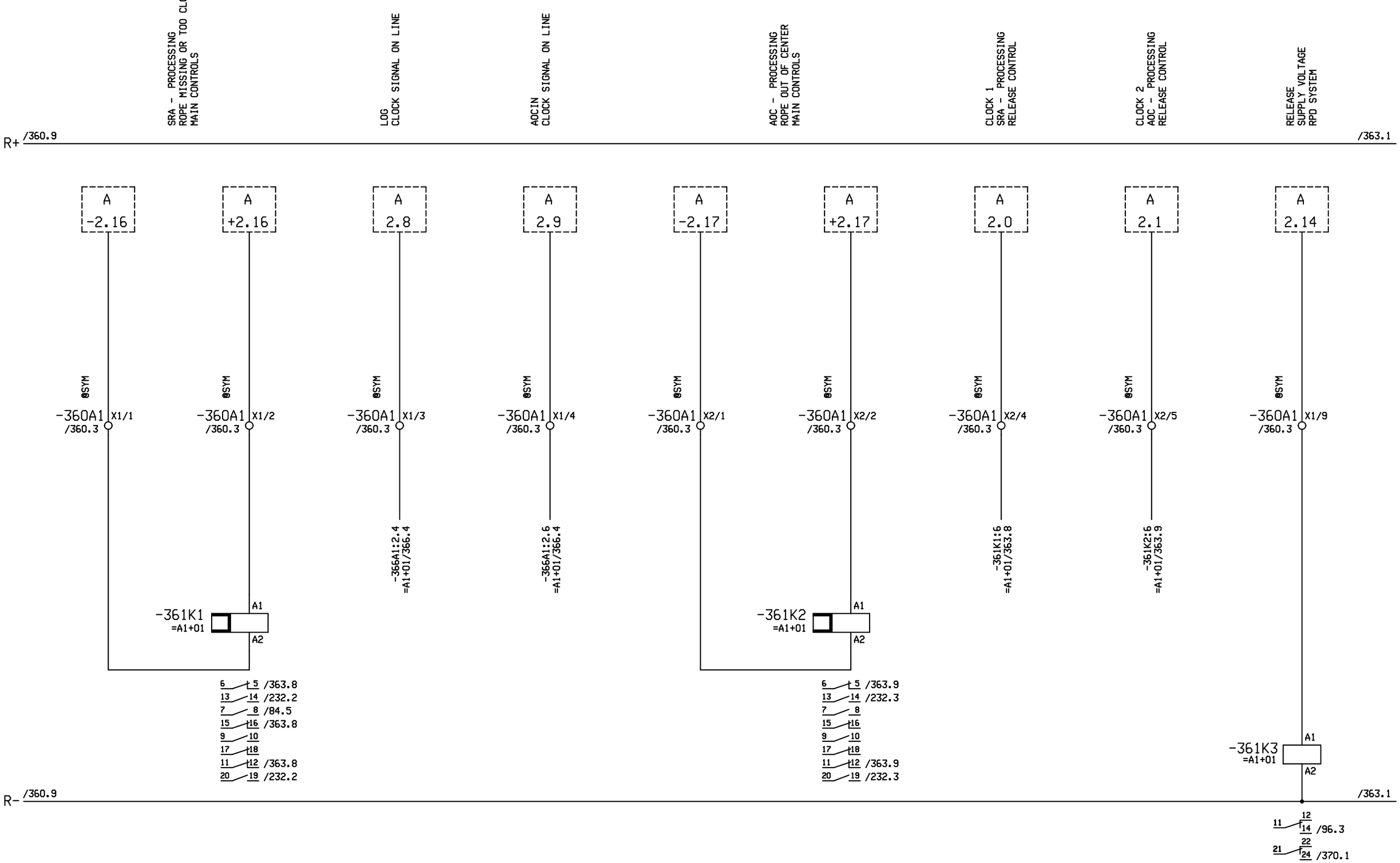

Revision	2.0	Drawn by	SST
Date	19.01.17	Dr.ch.by	FMa

File: ANWAA4185

10-MGD BaNa4
WAA0004185
DANANG / VIETNAM

Doppelmayr ®
Innova Patent GmbH
A-6960 WOLFURT / AUSTRIA

RPD OUTPUT PLC PSS 3047-3

DRIVE STATION | LV-CONTROL

=A1+01

Date	01.04.16
Sheet :	361
Cont.sheet:	363

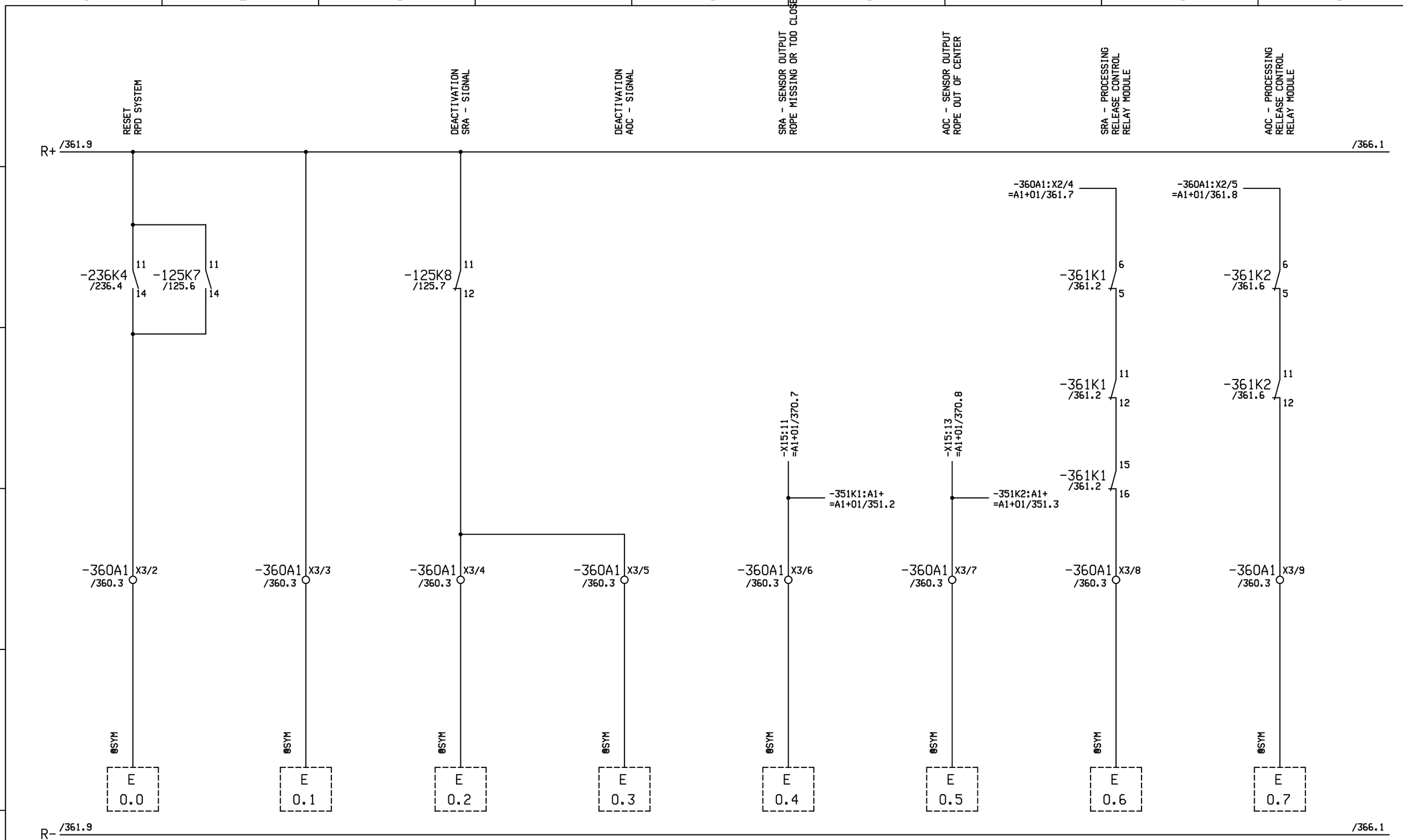

Revision	2.0	Drawn by	SST
Date	19.01.17	Dr.ch.by	FMa
File:	ANWAA4185		

10-MGD BaNa4
WAA0004185
DANANG / VIETNAM

Doppelmayr ®
Innova Patent GmbH
A-6960 WOLFURT / AUSTRIA

RPD INPUT PLC PSS 3047-3

DRIVE STATION | LV-CONTROL

=A1+01

Date	01.04.16
Sheet :	363
Cont.sheet:	366

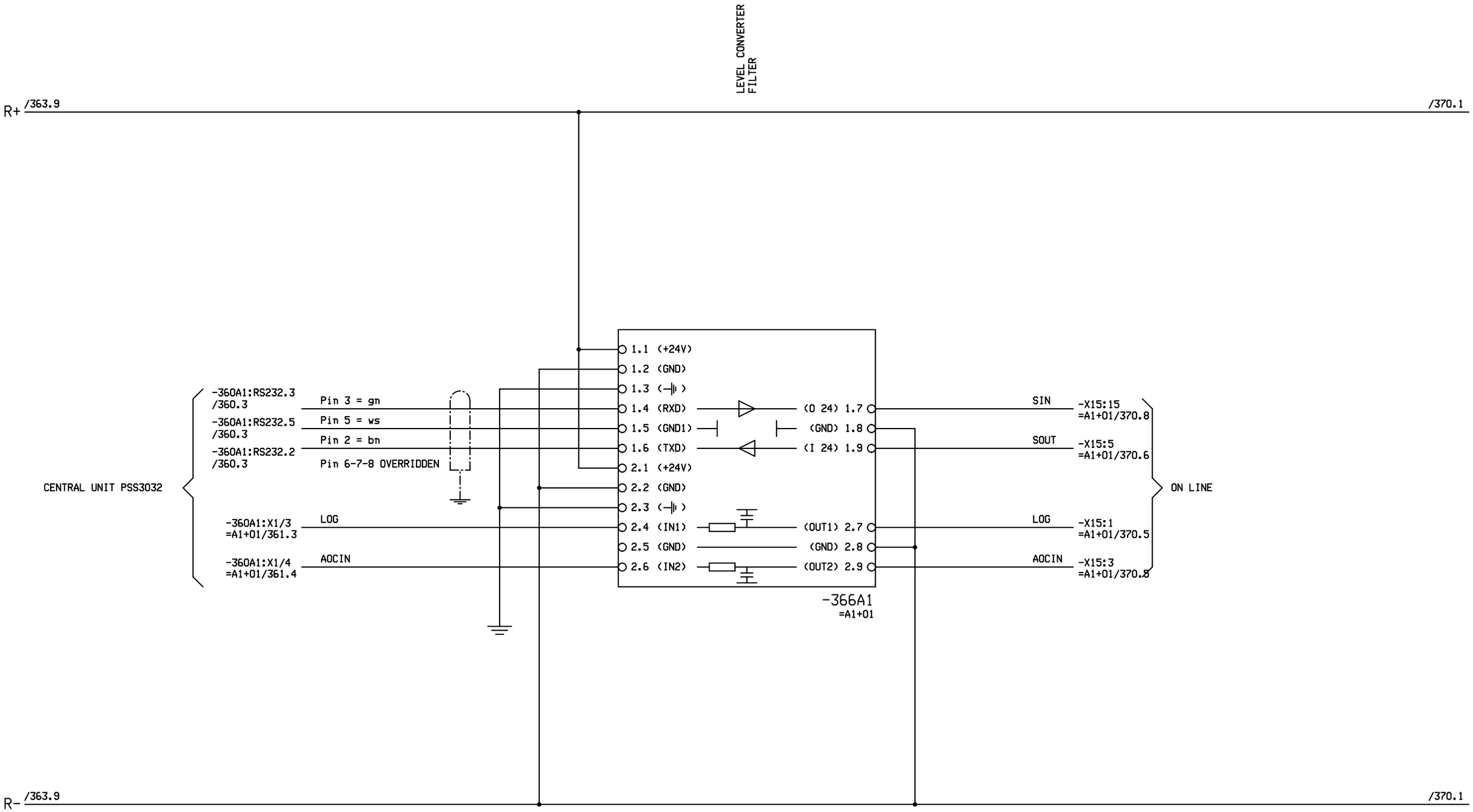

Revision	2.0	Drawn by	SST
Date	19.01.17	Dr.ch.by	FMa
File:	ANWAA4185		

10-MGD BaNa4
WAA0004185
DANANG / VIETNAM

Doppelmayr ®
Innova Patent GmbH
A-6960 WOLFURT / AUSTRIA

RPD LEVEL CONVERTER + FILTER

DRIVE STATION | LV-CONTROL

=A1+01

Date	01.04.16
Sheet :	366
Cont.sheet:	370

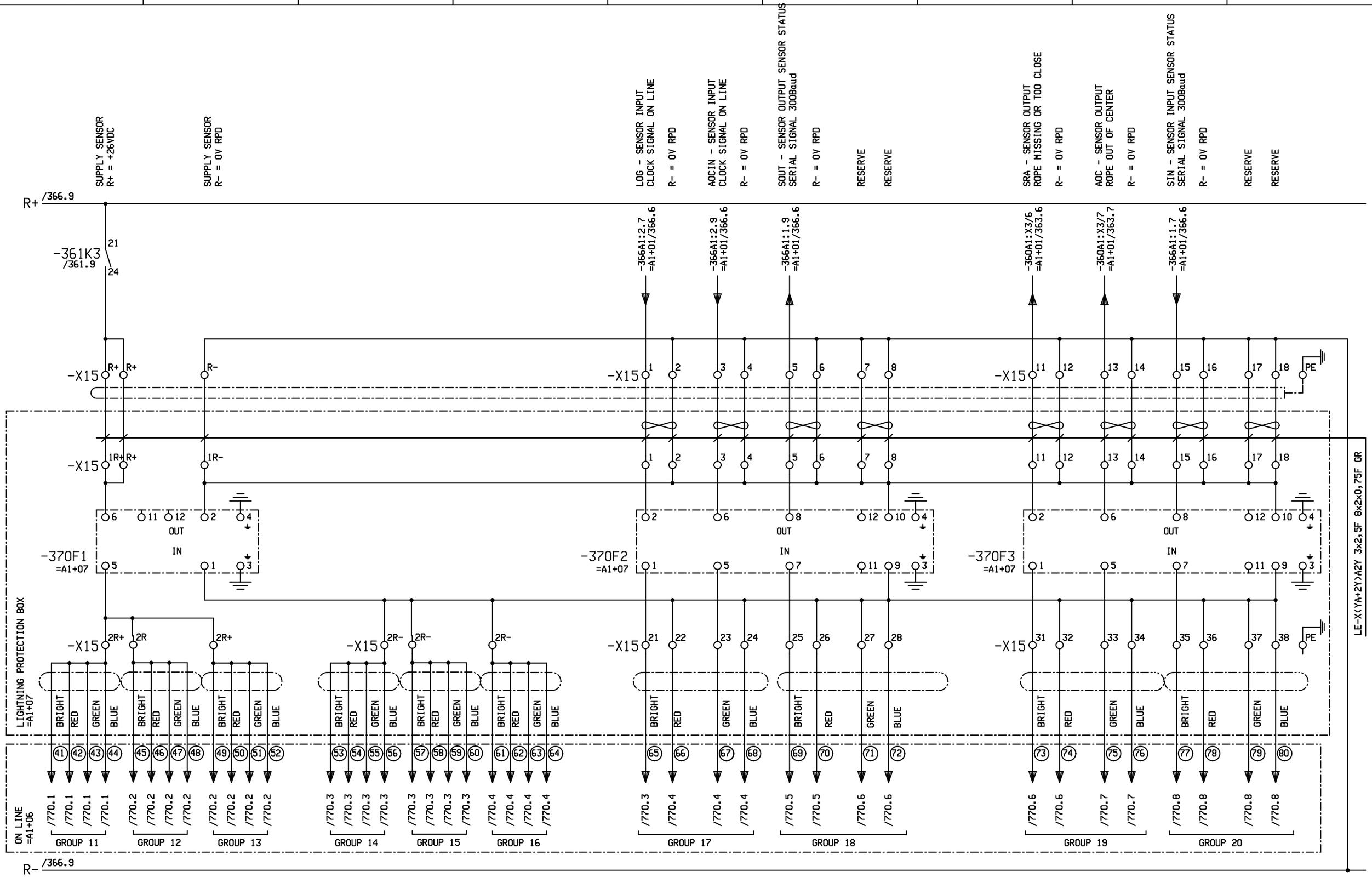

Revision	2.0	Drawn by	SST
Date	19.01.17	Dr.ch.by	FMa

File: ANWAA4185

10-MGD BaNa4
WAA0004185
DANANG / VIETNAM

Doppelmayr ®
Innova Patent GmbH
A-6960 WOLFURT / AUSTRIA

RPD ON LINE

DRIVE STATION | LV-CONTROL

=A1+01

Date	23.06.16
Sheet :	370
Cont.sheet:	382

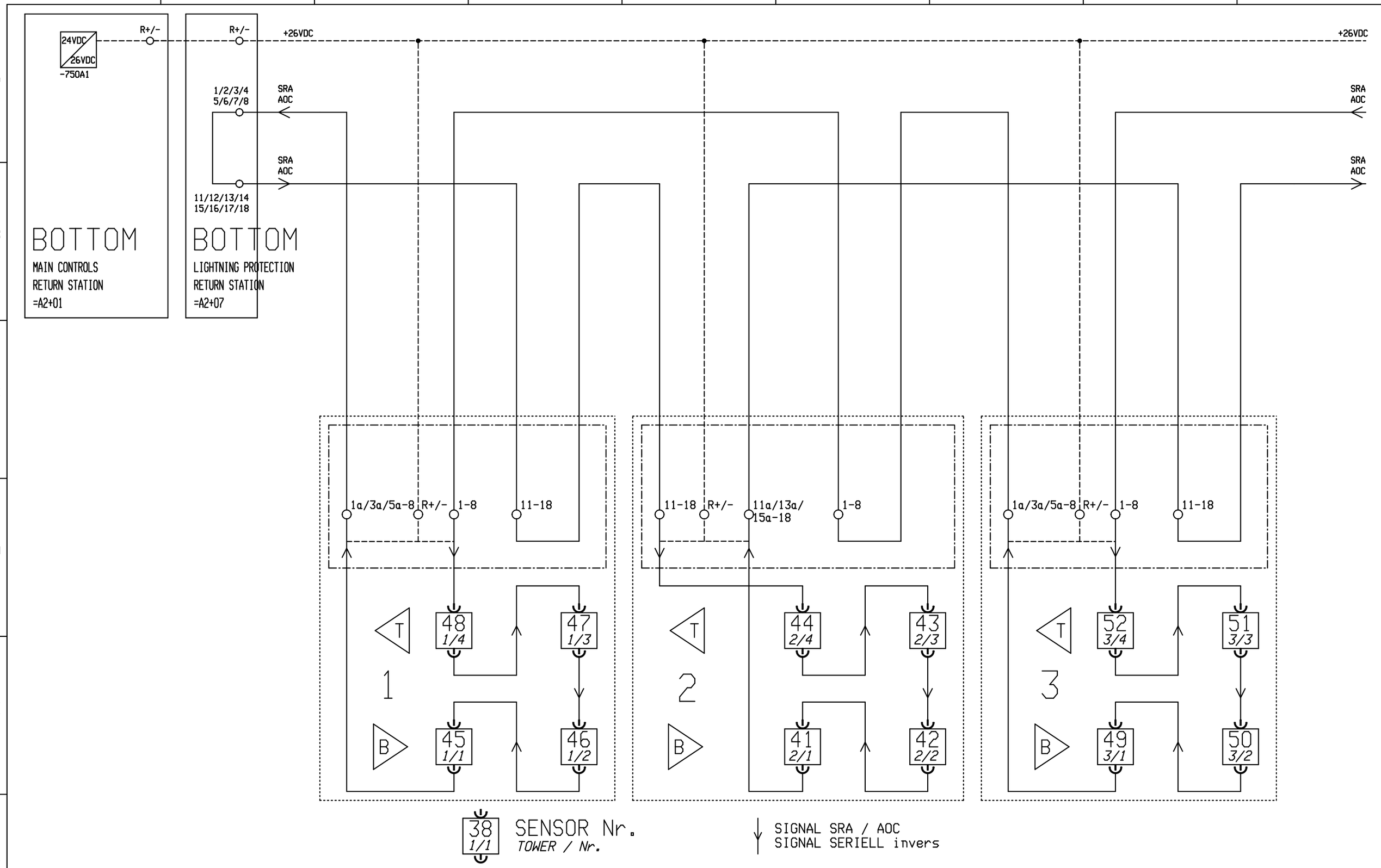

Revision	2.0	Drawn by	SST
Date	19.01.17	Dr.ch.by	FMa
File:	ANWAA4185		

10-MGD BaNa4
WAA0004185
DANANG / VIETNAM

Doppelmayr ®
Innova Patent GmbH
A-6960 WOLFURT / AUSTRIA

RPD JUNCTION DIAGRAM DRIVE TOP

DRIVE STATION | LV-CONTROL

=A1+01

Date	23.06.16
Sheet :	382
Cont.sheet:	383

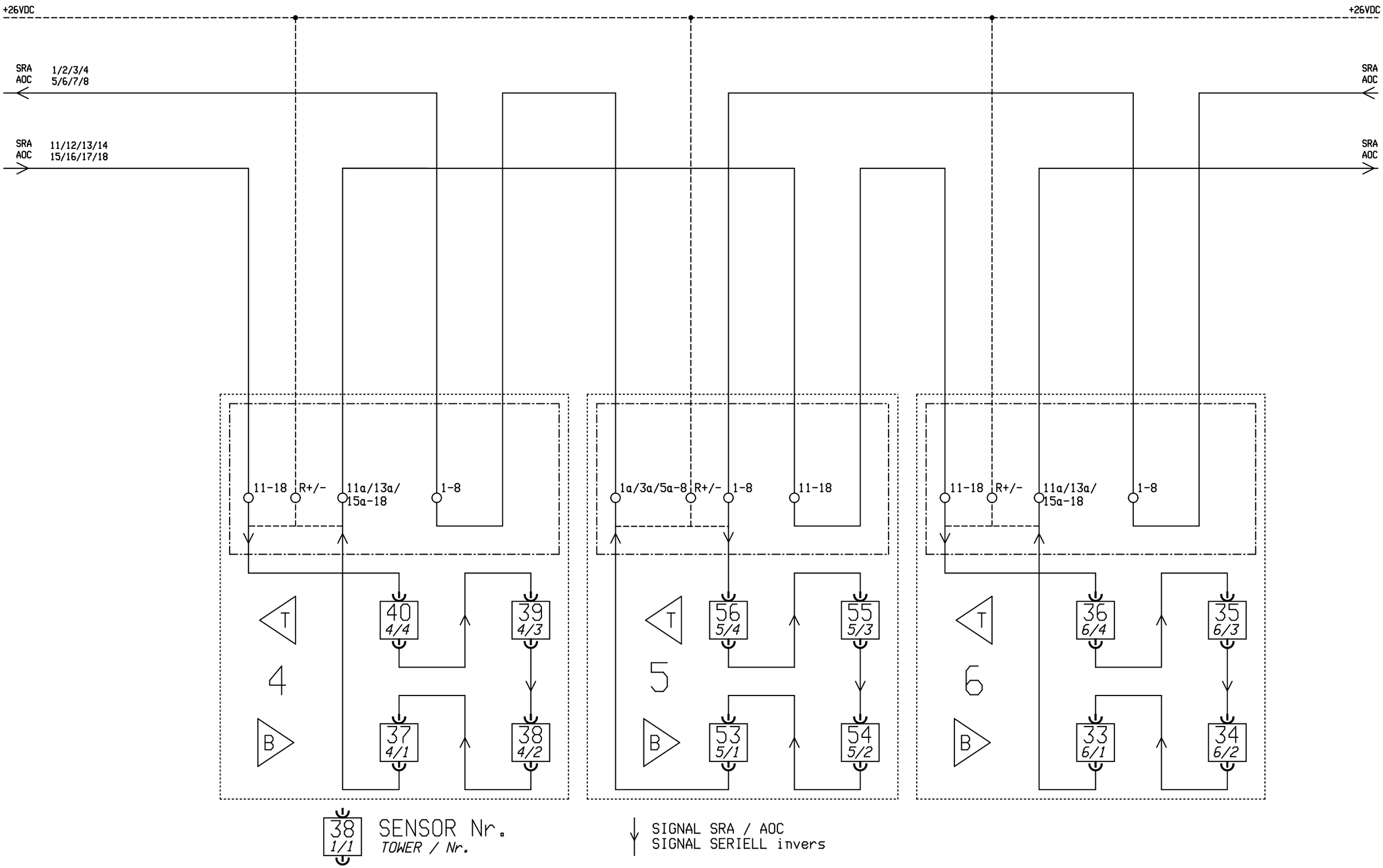

Revision	2.0	Drawn by	SST	10-MGD BaNa4	Doppelmayr ®	RPD JUNCTION DIAGRAM DRIVE TOP	=A1+01
Date	19.01.17	Dr.ch.by	FMa	WAA0004185	Innova Patent GmbH		Date 23.06.16
File:	ANWAA4185			DANANG / VIETNAM	A-6960 WOLFURT / AUSTRIA	DRIVE STATION / LV-CONTROL	Sheet : 383
							Cont.sheet: 384

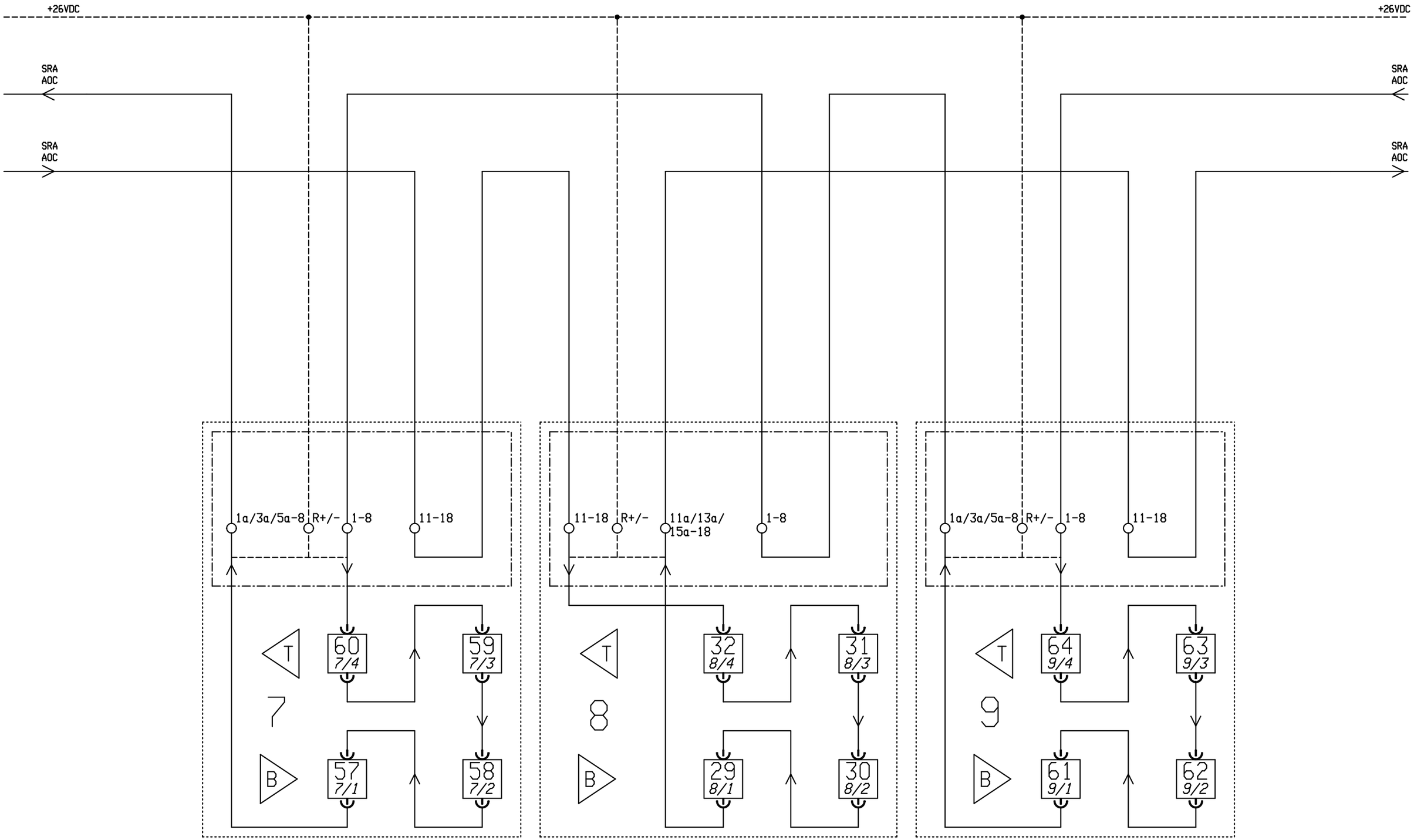

Revision	2.0	Drawn by	SST
Date	19.01.17	Dr.ch.by	FMa
File:	ANWAA4185		

10-MGD BaNa4
WAA0004185
DANANG / VIETNAM

Doppelmayr ®
Innova Patent GmbH
A-6960 WOLFURT / AUSTRIA

RPD JUNCTION DIAGRAM DRIVE TOP

DRIVE STATION | LV-CONTROL

=A1+01

Date	23.06.16
Sheet :	384
Cont.sheet:	385

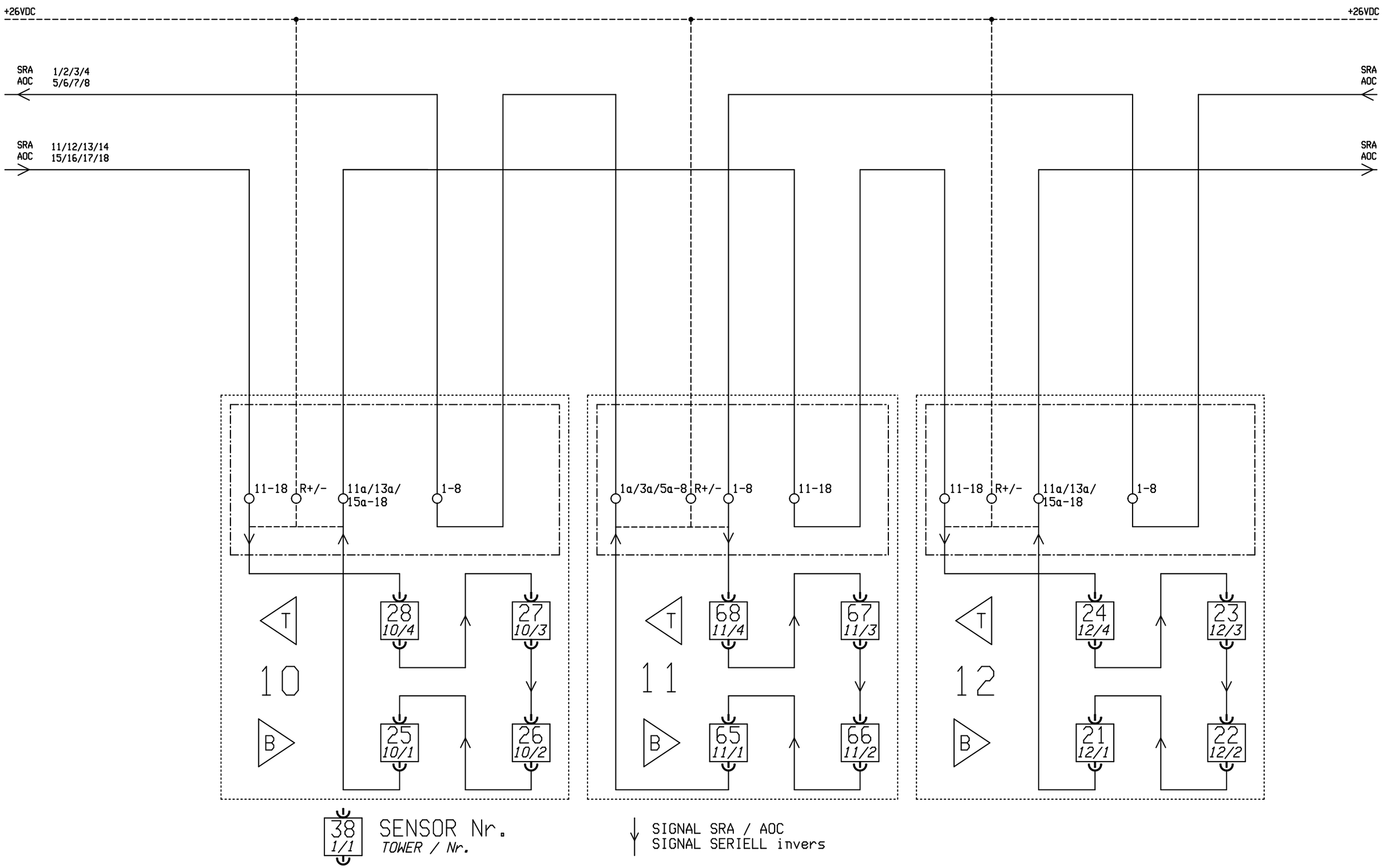

Revision	2.0	Drawn by	SST	10-MGD BaNa4	Doppelmayr ®	RPD JUNCTION DIAGRAM DRIVE TOP	=A1+01
Date	19.01.17	Dr.ch.by	FMa	WAA0004185	Innova Patent GmbH		Date 23.06.16
File:	ANWAA4185			DANANG / VIETNAM	A-6960 WOLFURT / AUSTRIA	DRIVE STATION / LV-CONTROL	Sheet : 385
							Cont.sheet: 386

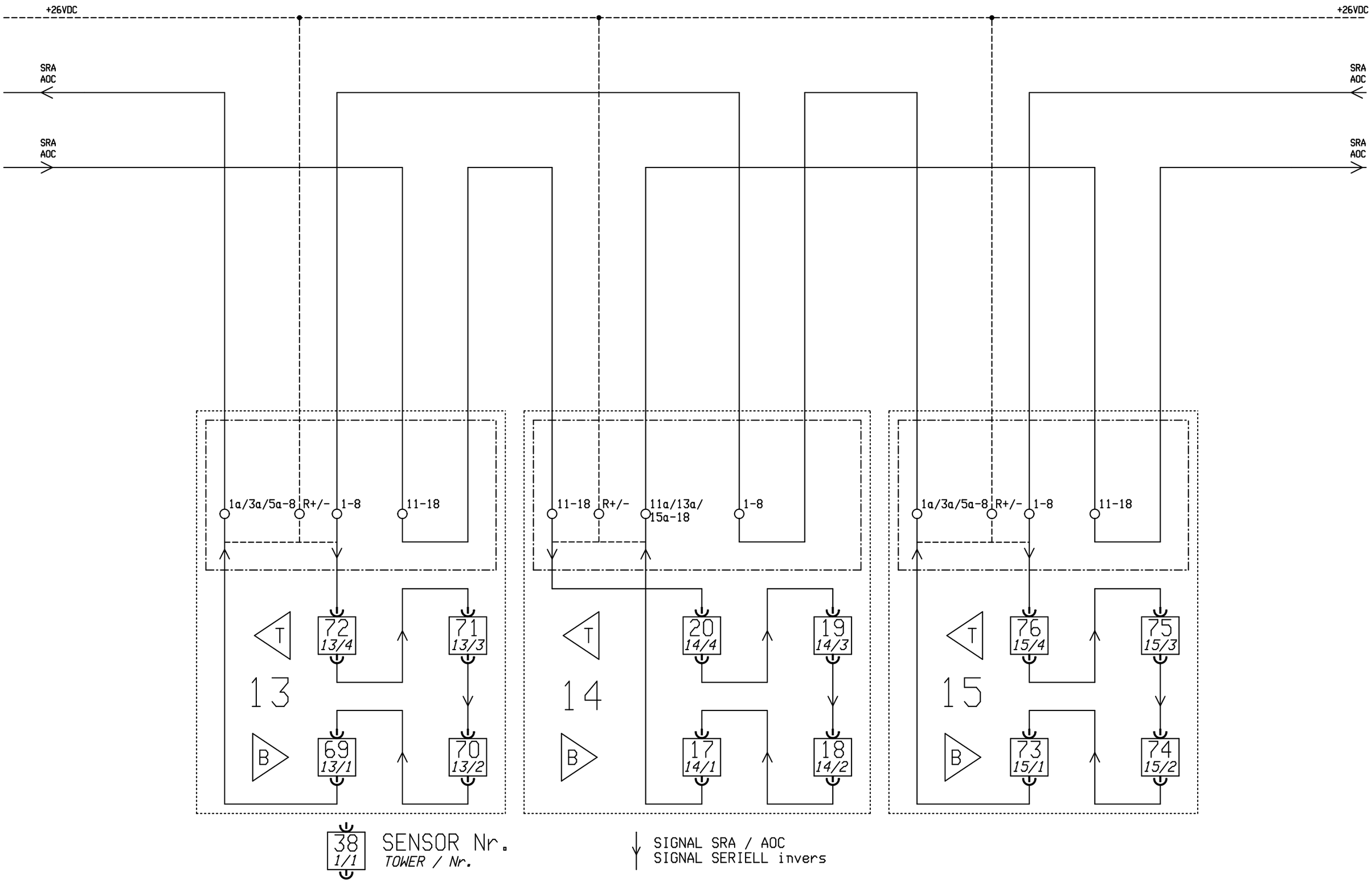

Revision	2.0	Drawn by	SST
Date	19.01.17	Dr.ch.by	FMa
File:	ANWAA4185		

10-MGD BaNa4
WAA0004185
DANANG / VIETNAM

Doppelmayr ®
Innova Patent GmbH
A-6960 WOLFURT / AUSTRIA

RPD JUNCTION DIAGRAM DRIVE TOP

DRIVE STATION | LV-CONTROL

=A1+01

Date	23.06.16
Sheet :	386
Cont.sheet:	387

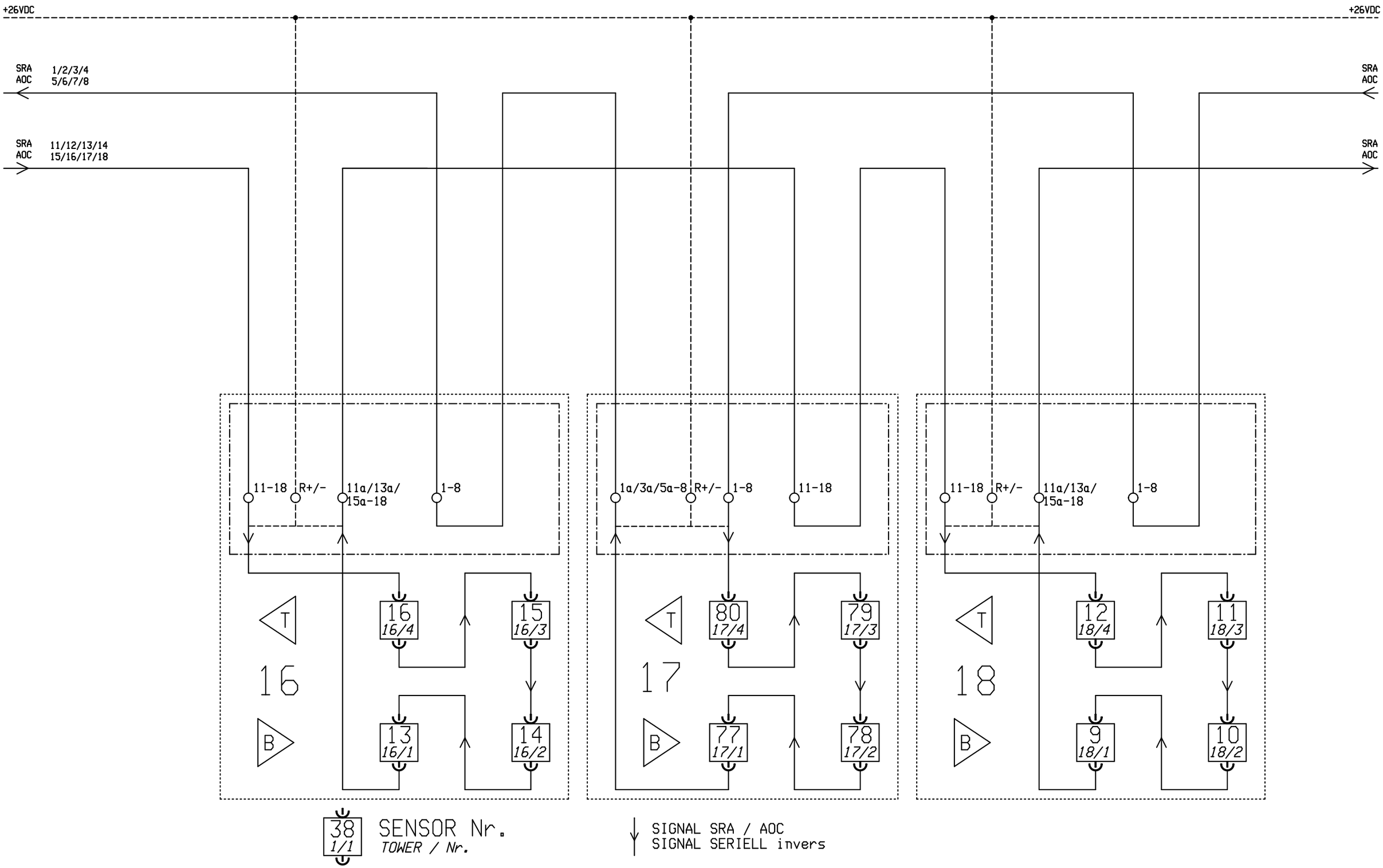

Revision	2.0	Drawn by	SST
Date	19.01.17	Dr.ch.by	FMa
File:	ANWAA4185		

10-MGD BaNa4
WAA0004185
DANANG / VIETNAM

Doppelmayr ®
Innova Patent GmbH
A-6960 WOLFURT / AUSTRIA

RPD JUNCTION DIAGRAM DRIVE TOP

DRIVE STATION | LV-CONTROL

=A1+01

Date	23.06.16
Sheet :	387
Cont.sheet:	388

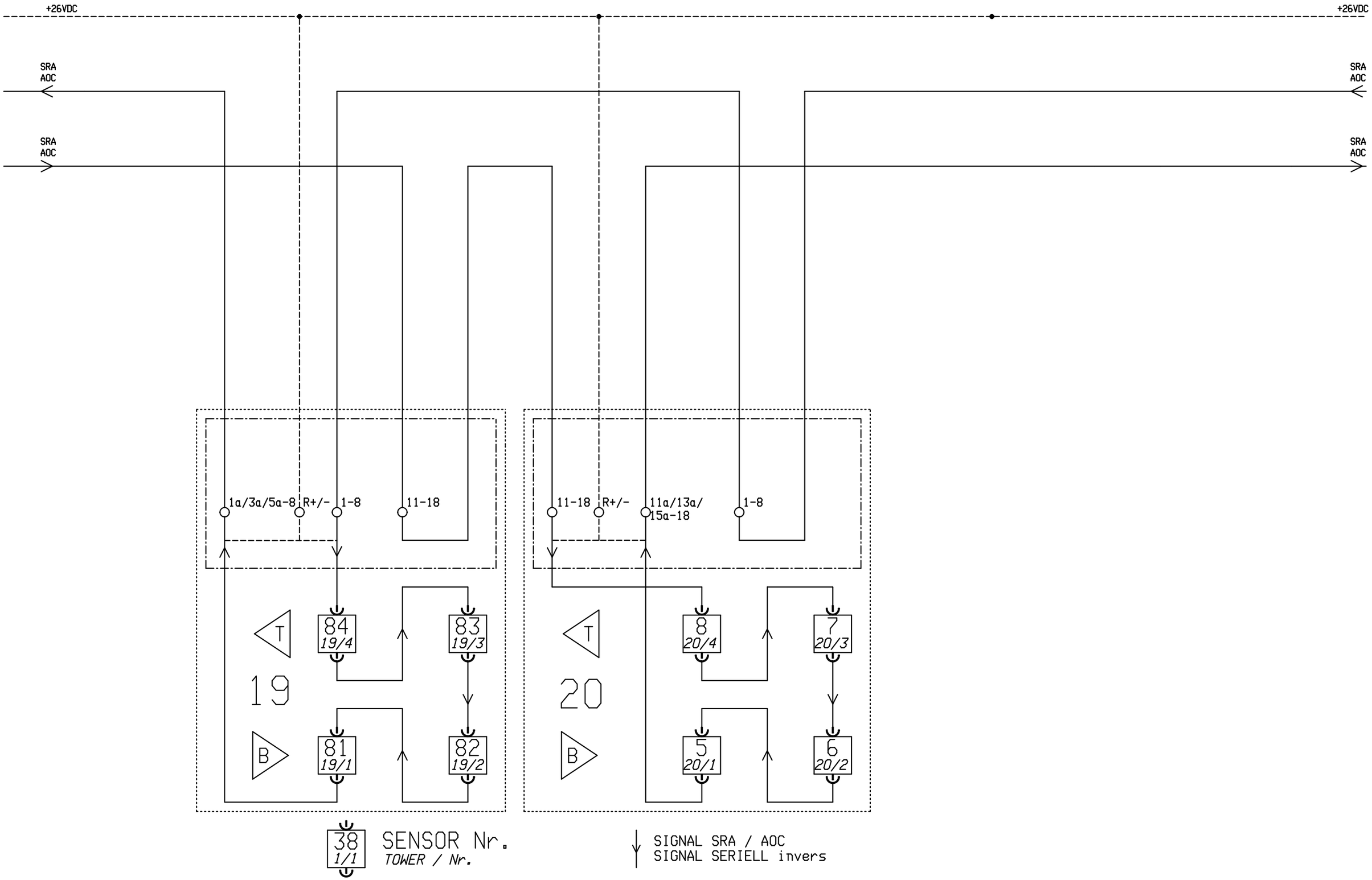

Revision	2.0	Drawn by	SST
Date	19.01.17	Dr.ch.by	FMa
File:	ANWAA4185		

10-MGD BaNa4
WAA0004185
DANANG / VIETNAM

Doppelmayr ®
Innova Patent GmbH
A-6960 WOLFURT / AUSTRIA

RPD JUNCTION DIAGRAM DRIVE TOP

DRIVE STATION | LV-CONTROL

=A1+01

Date	23.06.16
Sheet :	388
Cont.sheet:	389

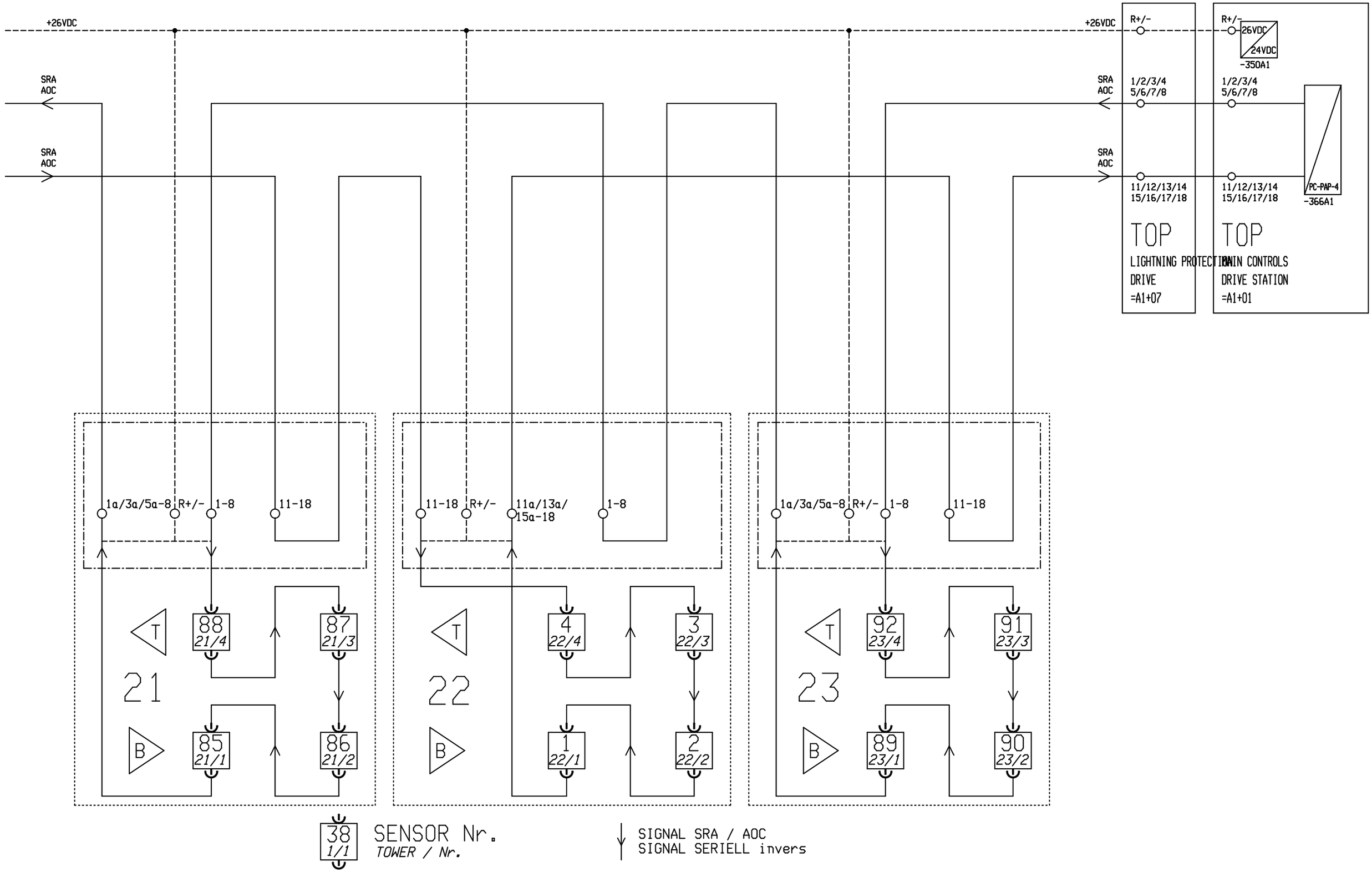

Revision	2.0	Drawn by	SST	10-MGD BaNa4	Doppelmayr ®	RPD JUNCTION DIAGRAM DRIVE TOP	=A1+01
Date	19.01.17	Dr.ch.by	FMa	WAA0004185	Innova Patent GmbH		Date 23.06.16
File:	ANWAA4185			DANANG / VIETNAM	A-6960 WOLFURT / AUSTRIA	DRIVE STATION / LV-CONTROL	Sheet : 389
							Cont.sheet: 395

TOWER	UPHILL ROPE INCOMING		UPHILL ROPE OUTGOING		DOWNHILL ROPE INCOMING		DOWNHILL ROPE OUTGOING	
	SENSOR No.	TOWER / POS.	SENSOR No.	TOWER / POS.	SENSOR No.	TOWER / POS.	SENSOR No.	TOWER / POS.
1	45	1/1	46	1/2	47	1/3	48	1/4
2	41	2/1	42	2/2	43	2/3	44	2/4
3	49	3/1	50	3/2	51	3/3	52	3/4
4	37	4/1	38	4/2	39	4/3	40	4/4
5	53	5/1	54	5/2	55	5/3	56	5/4
6	33	6/1	34	6/2	35	6/3	36	6/4
7	57	7/1	58	7/2	59	7/3	60	7/4
8	29	8/1	30	8/2	31	8/3	32	8/4
9	61	9/1	62	9/2	63	9/3	64	9/4
10	25	10/1	26	10/2	27	10/3	28	10/4
11	65	11/1	66	11/2	67	11/3	68	11/4
12	21	12/1	22	12/1	23	12/3	24	12/4
13	69	13/1	70	13/2	71	13/3	72	13/4
14	17	14/1	18	14/2	19	14/3	20	14/4
15	73	15/1	74	15/2	75	15/3	76	15/4
16	13	16/1	14	16/2	15	16/3	16	16/4
17	77	17/1	78	17/2	79	17/3	80	17/4
18	9	18/1	10	18/2	11	18/3	12	18/4
19	81	19/1	82	19/1	83	19/3	84	19/4
20	5	20/1	6	20/2	7	20/3	8	20/4
21	85	21/1	86	21/2	87	21/3	88	21/4
22	1	22/1	2	22/2	3	22/3	4	22/4
23	89	23/1	90	23/2	91	23/3	92	23/4