INDEX

1 /	1	INDEX
2 /	3	CONTROL PANEL DIMENSIONS
3 /	5	POWER SUPPLY 3X400/230V
4 /	6	POWER SUPPLY 3X400/230V
5 /	7	POWER SUPPLY 3X400/230V
6 /	8	BATTERY CHARGER

Dieses Dokument ist geistiges Eigentum der Doppelmayr Seilbahnen GmbH und übertragen per 31.12. des Erstellungsjahres an die Innova Patent GmbH. Alle technischen Angaben und Zeichnungen sind urheberrechtlich geschützt. Der Inhalt dieses Dokuments darf ohne schriftliche Genehmigung der Doppelmayr Seilbahnen GmbH auch nicht auszugsweise an Dritte weitergegeben werden.

This document is the intellectual property of Doppelmayr Seilbahnen GmbH and will be transferred to Innova Patent GmbH on 31.12. of the year of creation. All technical data and drawings are protected by copyright. The content of this document, including extracts, may not be passed on to third parties without written approval from Doppelmayr Seilbahnen GmbH.

Revision	2.0	Drawn by	MaM
Date	09.07.08	Dr.ch.by	Fhs
File:	BGWAA1753		

8-MGD BANA PEAK GONDOLA
WAA0001753
DANANG / VIETNAM

Doppelmayr ®
Innova Patent GmbH
A-6960 WOLFURT / AUSTRIA

INDEX

RETURN STATION | BATTERY PANEL

Rev.ind.	2.0	=	=A2+025
Date	09.07.09	+	
Drawn by	Sst	Sheet :	1
Dr.ch.by	Fhs	Cont.sheet:	3

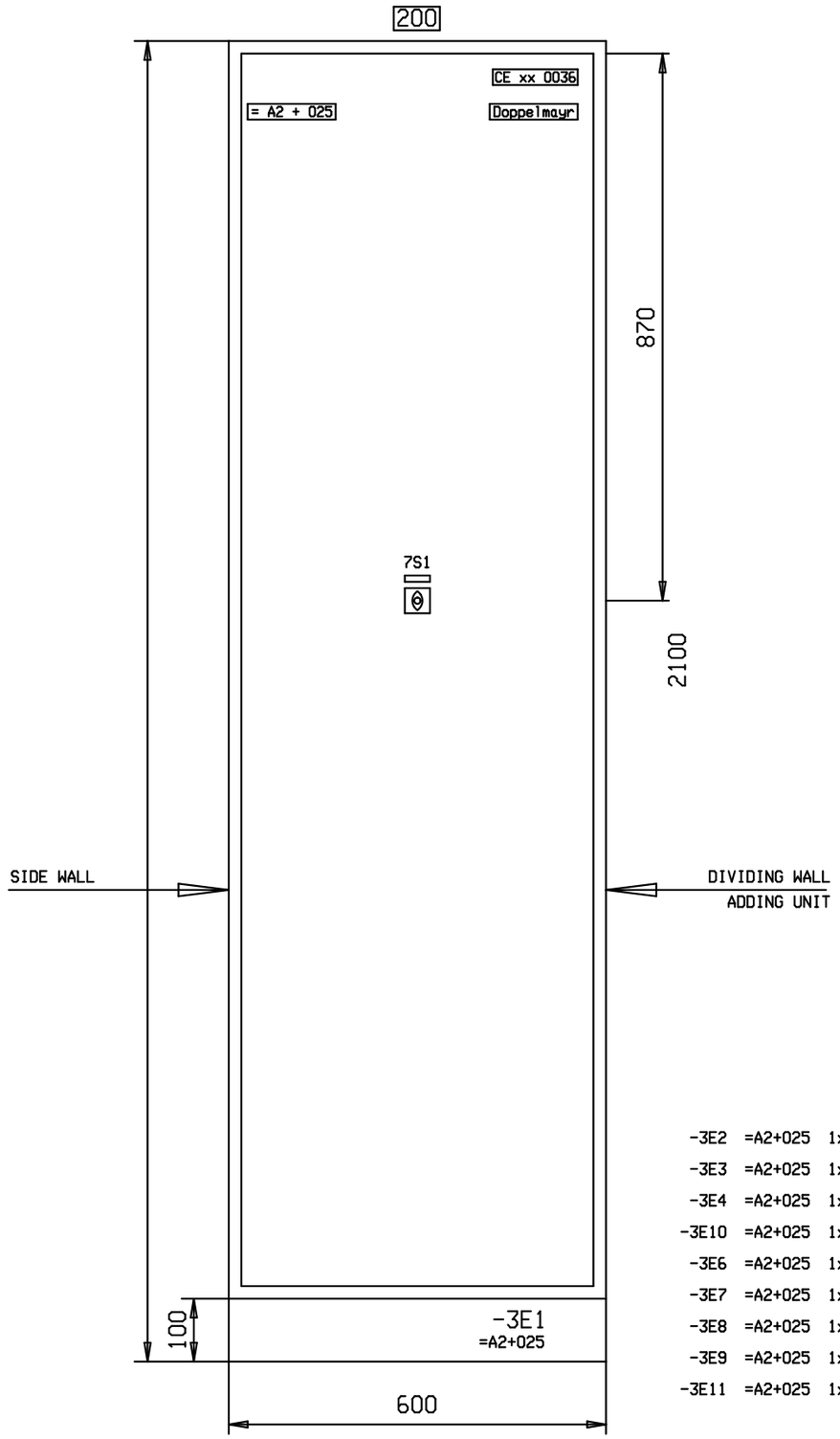

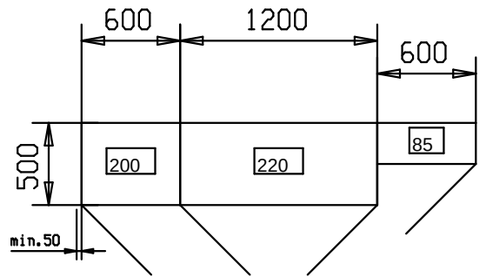

CABINET ARRANGEMENT

200 ... BATTERY PANEL

220 ... MAIN CONTROLS RETURN STATION

85 ... LIGHTNING PROTECTION (WALL CUPBOARD)

ATTENTION

Check dimension '870 mm' for switch.

-3E2	=A2+025	1x	SIDE WALL
-3E3	=A2+025	1x	DIVIDING WALL
-3E4	=A2+025	1x	ADDING UNIT
-3E10	=A2+025	1x	STICKER - "=A2+025"
-3E6	=A2+025	1x	PARTICLE BOARD
-3E7	=A2+025	1x	STICKER - ATTENTION - ELECTRICITY
-3E8	=A2+025	1x	STICKER - CEN
-3E9	=A2+025	1x	LSC-FRAME
-3E11	=A2+025	1x	STICKER - "Doppelmayr-Logo"

Revision	2.0	Drawn by	MaM
Date	09.07.08	Dr.ch.by	Fhs
File:	BGWAA1753		

8-MGD BANA PEAK GONDOLA
WAA0001753
DANANG / VIETNAM

Doppelmayr ®
Innova Patent GmbH
A-6960 WOLFURT / AUSTRIA

CONTROL PANEL DIMENSIONS

RETURN STATION | BATTERY PANEL

Rev.ind.	0.0	= +	=A2+025
Date	09.07.09		
Drawn by	MaM	Sheet :	3
Dr.ch.by	Fhs	Cont.sheet:	5

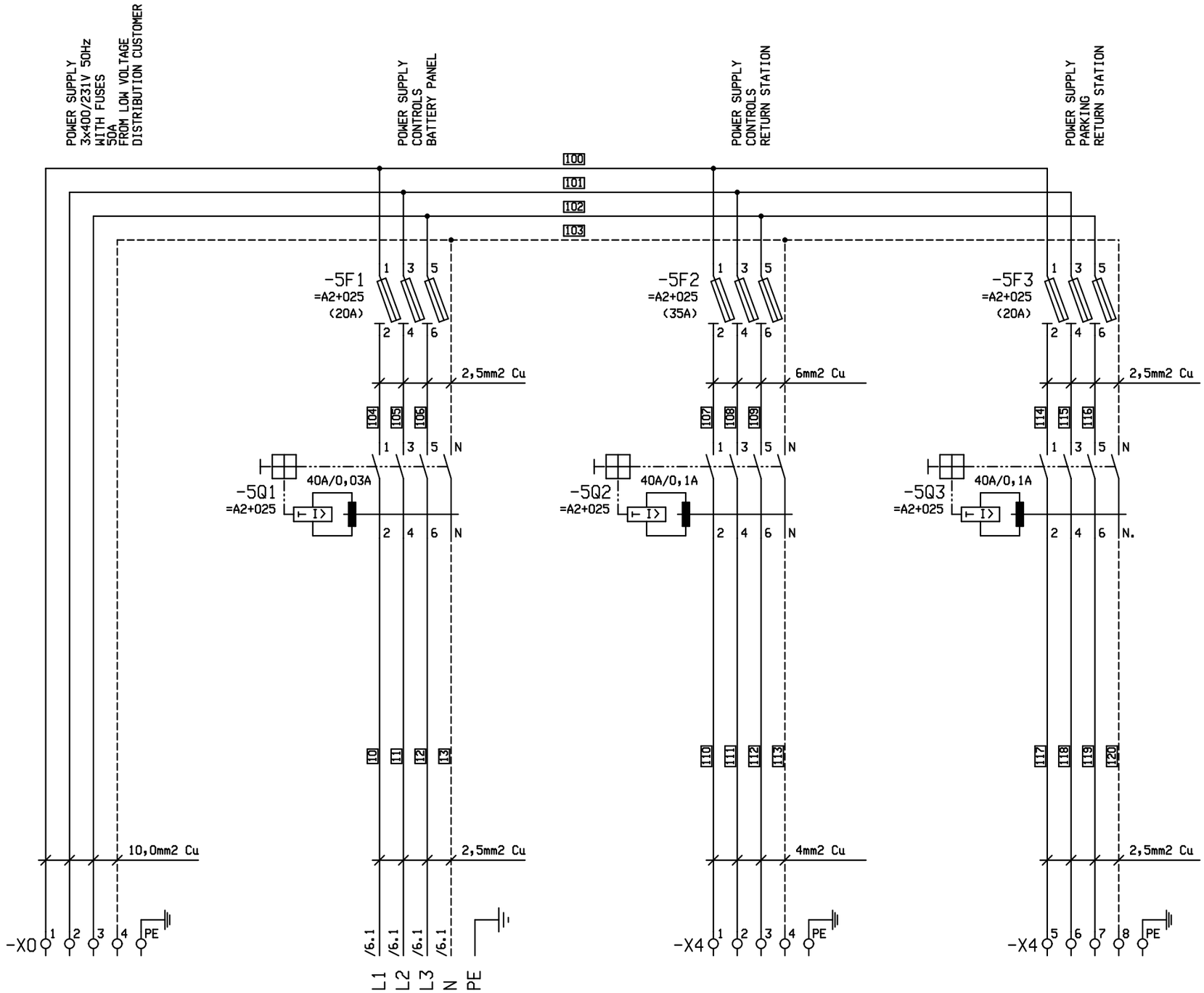

100-139

Revision	2.0	Drawn by	MaM	8-MGD BANA PEAK GONDOLA WAA0001753 DANANG / VIETNAM	Doppelmayr Innova Patent GmbH A-6960 WOLFURT / AUSTRIA	POWER SUPPLY 3X400/230V	Rev.ind. 2.0	= =A2+025
Date	09.07.08	Dr.ch.by	Fhs				Date 09.07.09	+
File:	BGWAA1753					RETURN STATION / BATTERY PANEL	Drawn by Sst	Sheet : 5
							Dr.ch.by Fhs	Cont.sheet: 6

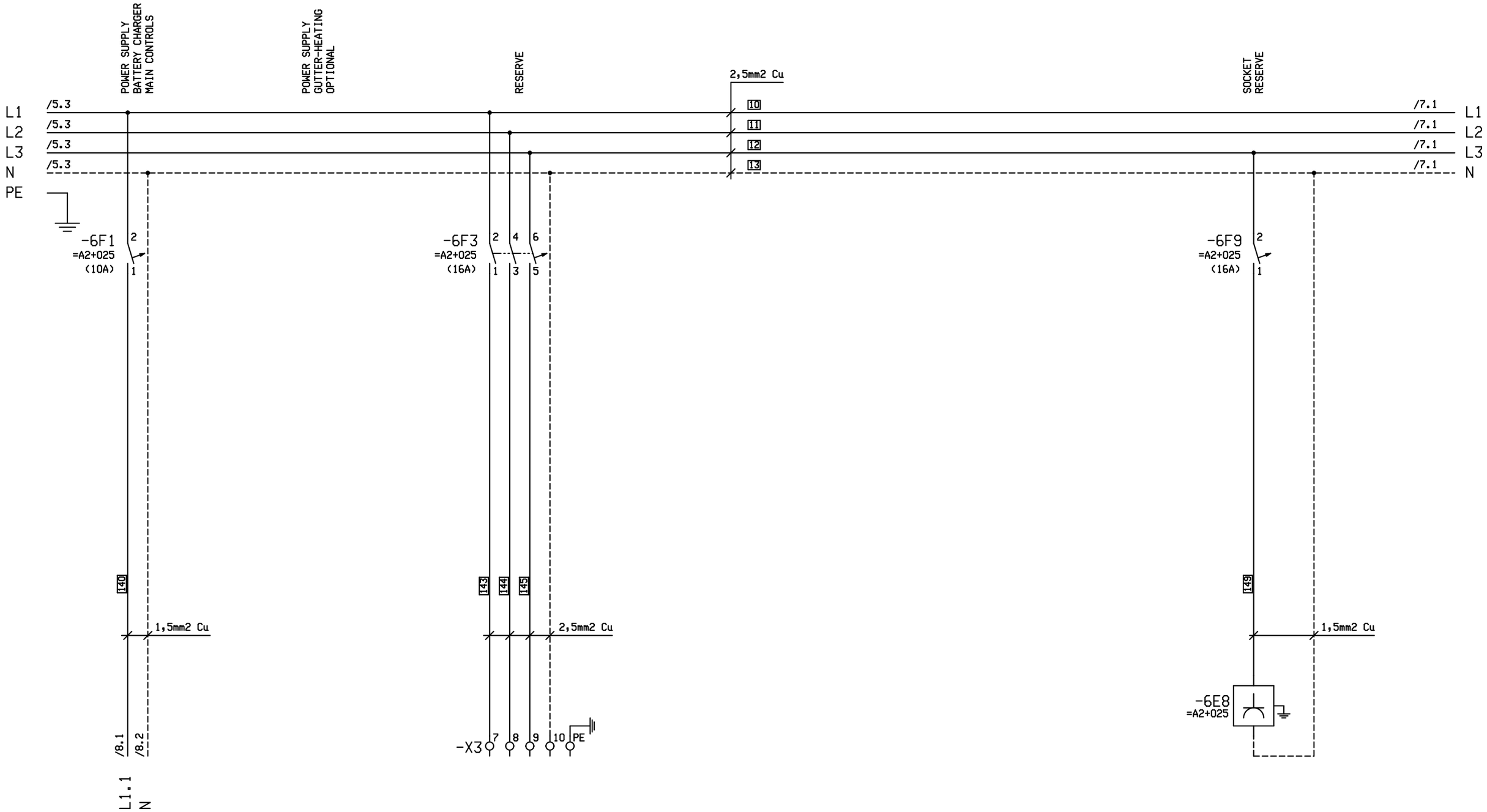

140-159

Revision	2.0	Drawn by	MaM	8-MGD BANA PEAK GONDOLA WAA0001753 DANANG / VIETNAM	Doppelmayr Innova Patent GmbH A-6960 WOLFURT / AUSTRIA	POWER SUPPLY 3X400/230V		Rev.ind.	0.0	= + =A2+025
Date	09.07.08	Dr.ch.by	Fhs					Date	17.07.08	
File:	BGWAA1753					RETURN STATION	BATTERY PANEL	Drawn by	MaM	Sheet : 6
								Dr.ch.by	Fhs	Cont.sheet: 7

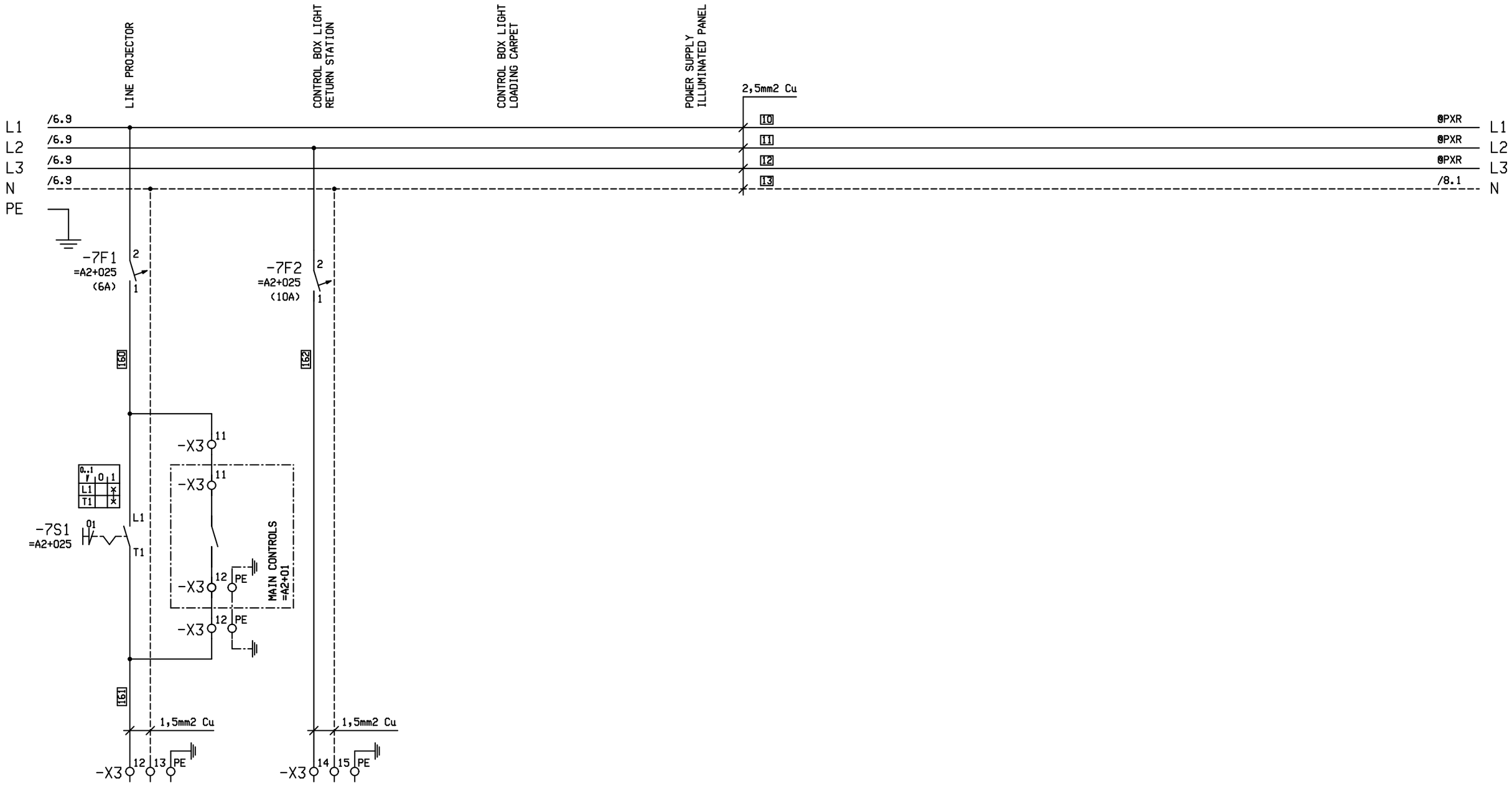

160-179

Revision	2.0	Drawn by	MaM	8-MGD BANA PEAK GONDOLA WAA0001753 DANANG / VIETNAM	Doppelmayr ® Innova Patent GmbH A-6960 WOLFURT / AUSTRIA	POWER SUPPLY 3X400/230V	Rev.ind.	0.0	= + =A2+025
Date	09.07.08	Dr.ch.by	Fhs				Date	16.07.08	
File:	BGWAA1753					RETURN STATION / BATTERY PANEL	Drawn by	MaM	Sheet : 7
							Dr.ch.by	Fhs	Cont.sheet: 8

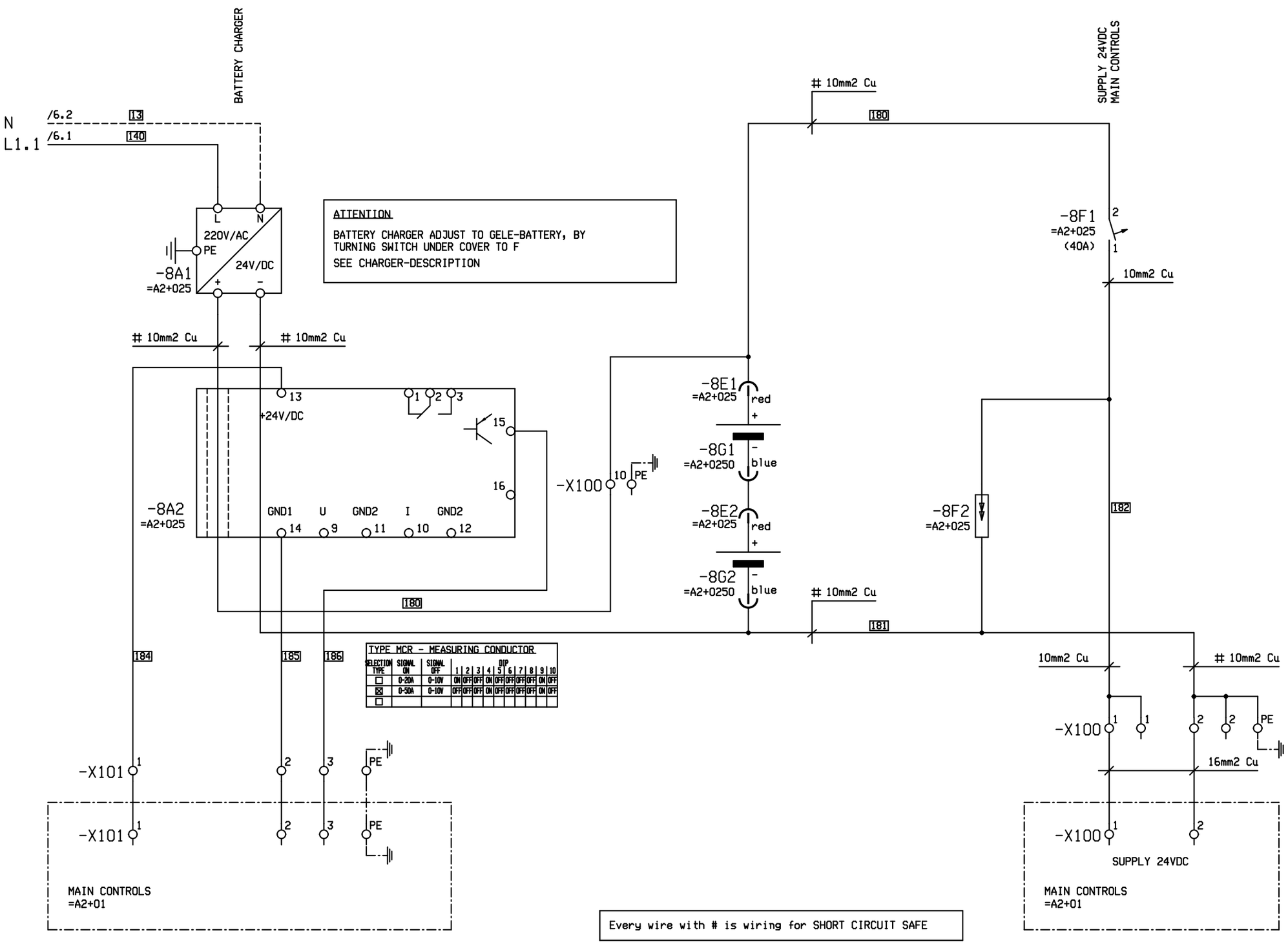

Every wire with # is wiring for SHORT CIRCUIT SAFE

180-209

Revision	2.0	Drawn by	MaM
Date	09.07.08	Dr.ch.by	Fhs
File:	BGWAA1753		

8-MGD BANA PEAK GONDOLA
WAA0001753
DANANG / VIETNAM

Doppelmayr ®
Innova Patent GmbH
A-6960 WOLFURT / AUSTRIA

BATTERY CHARGER

RETURN STATION | BATTERY PANEL

Rev.ind.	0.0	=	=A2+025
Date	16.07.08	+	
Drawn by	MaM	Sheet :	8
Dr.ch.by	Fhs	Cont.sheet:	