INDEX

1 /	1	INDEX
2 /	2	INFORMATION
3 /	4	CONTROL PANEL DIMENSIONS
4 /	5	DIESEL ENGINE
5 /	6	CONTROL LIGHTS
6 /	9	DIESEL ENGINE

Dieses Dokument ist geistiges Eigentum der Doppelmayr Seilbahnen GmbH und übertragen per 31.12. des Erstellungsjahres an die Innova Patent GmbH. Alle technischen Angaben und Zeichnungen sind urheberrechtlich geschützt. Der Inhalt dieses Dokuments darf ohne schriftliche Genehmigung der Doppelmayr Seilbahnen GmbH auch nicht auszugsweise an Dritte weitergegeben werden.

This document is the intellectual property of Doppelmayr Seilbahnen GmbH and will be transferred to Innova Patent GmbH on 31.12. of the year of creation. All technical data and drawings are protected by copyright. The content of this document, including extracts, may not be passed on to third parties without written approval from Doppelmayr Seilbahnen GmbH.

CHARACTERISTIC FEATURES OF THE SWITCHGEAR ASSEMBLY BY EN61439-1:

ELECTRICAL NETWORK	
POWER SYSTEM BY TYPE OF GROUND CONNECTION	TN-C-S
RATED VOLTAGE (Un)	400V
ALLOWED VOLTAGE DEVIATION AT THE CONNECTION OF SUPPLY	+/-5%
RATED FREQUENCY (fn)	50Hz
RATED IMPULSE STRENGTH VOLTAGE (Uimp)	2,5kV
RATED INSULATION VOLTAGE (Ui)	290V
SHORT CIRCUIT RATING	
MAXIMUM PROSPECTIVE SHORT-CIRCUIT CURRENT AT THE CONNECTION OF SUPPLY < 10kA ROOT MEAN SQUARE	
PROTECTION OF PERSONS AGAINST ELECTRIC SHOCK BY IEC 60364-4-41	
KIND OF PROTECTION AGAINST ELECTRIC SHOCK - BASIC PROTECTION	BASIC PROTECTION BY CONSTRUCTIVE MEASURES
KIND OF PROTECTION AGAINST ELECTRIC SHOCK - FAULT PROTECTION	PROTECTIVE MULTIPLE EARTHING
INSTALLATION ENVIRONMENT	
INSTALLATION AREA	OUTDOOR
PROTECTION CLASS	IP23
AMBIENT TEMPERATURE	-25°C - +30°C
POLLUTION DEGREE	2
EMC - ENVIRONMENT	A
MAX. HUMIDITY	100%
CURRENT CARRYING CAPACITY	
RATED CURRENT (InA)	SEE OVERCURRENT PROTECTION DEVICES
RATED CURRENT (Inc)	SEE OVERCURRENT PROTECTION DEVICES

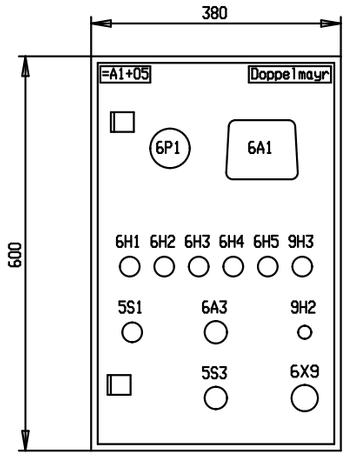

-4E1
=A1+05

-4E2 =A1+05 1x LSC-FRAME
-4E3 =A1+05 1x STICKER - "Doppelmayr-Logo"
-4E4 =A1+05 1x STICKER - "=05"

6P1..... TANK INDICATION
6A1..... SCREEN

6H1..... CHARGE CONTROL
6H2..... TANK
6H3..... INCANDESCENT LAMP
6H4..... MOTOR MAINTENANCE
6H5..... MOTOR ALARM
9H3..... FILTER SWITCH PUMP

5S1..... CONTROL VOLTAGE ON / MOTOR START
6A3..... DIESEL SPEED CONTROL
9H2..... HORN

5S3..... FUEL PREHEATING
6X9..... CONNECTOR - MOTOR MAINTENANCE

Revision	2.0	Drawn by	SST
Date	14.10.16	Dr.ch.by	Fma
File:	NKWAA4186		

10-MGD BaNa5
NKWAA4186
DANANG / VIETNAM

Doppelmayr ®
Innova Patent GmbH
A-6960 WOLFURT / AUSTRIA

CONTROL PANEL DIMENSIONS

DRIVE STATION | TERMINAL BOX EM. DRIVE / BRAKE HYD.

=A1+05

Date	22.03.16
Sheet :	4
Cont.sheet:	5

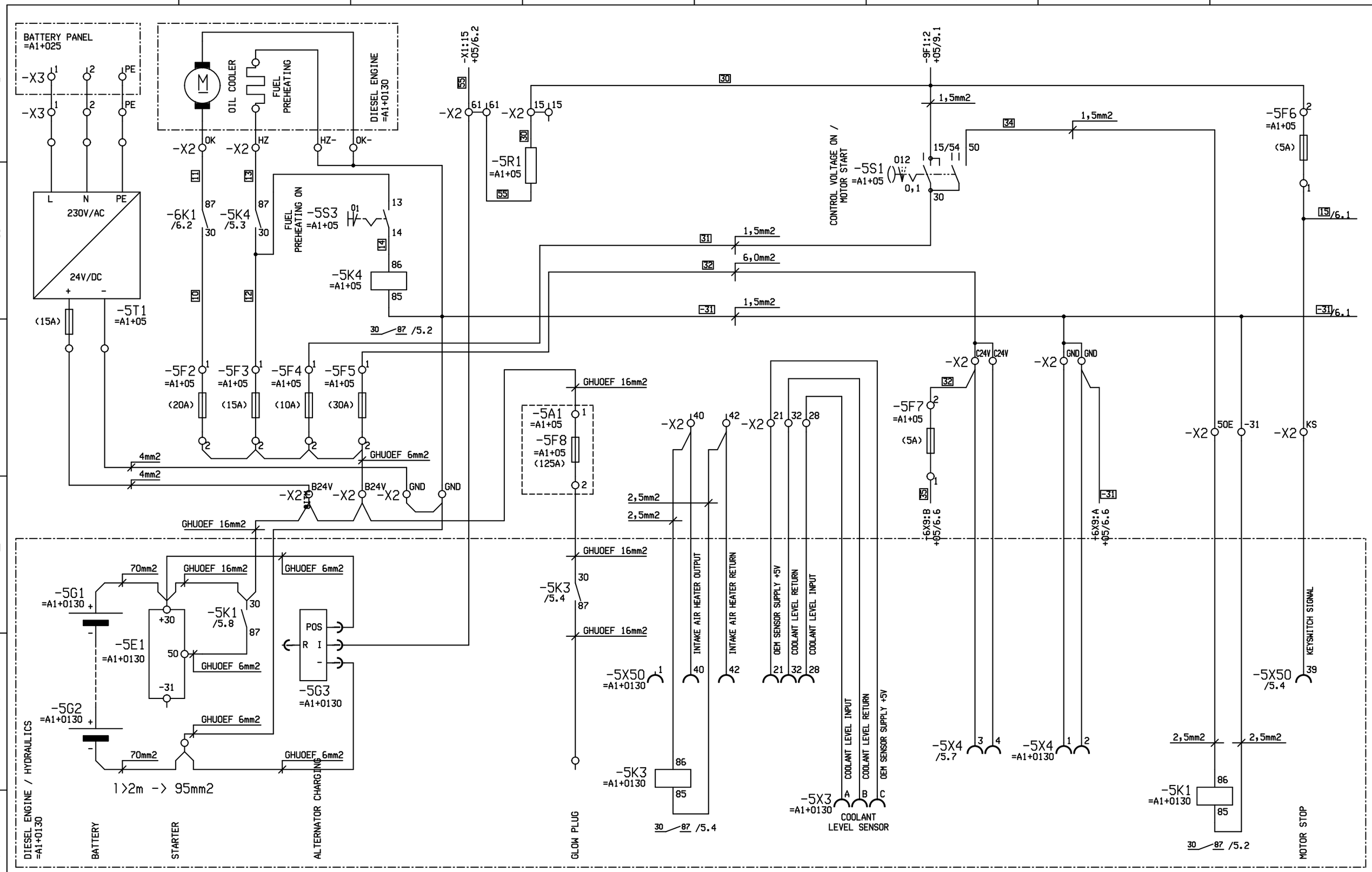

Revision	2.0	Drawn by	SST
Date	14.10.16	Dr.ch.by	Fma

File: NKWAA4186

10-MGD BaNa5
NKWAA4186
DANANG / VIETNAM

Doppelmayr ®
Innova Patent GmbH
A-6960 WOLFURT / AUSTRIA

DIESEL ENGINE

DRIVE STATION | TERMINAL BOX EM. DRIVE / BRAKE HYD.

=A1+05

Date	25.04.16
Sheet :	5
Cont.sheet:	6

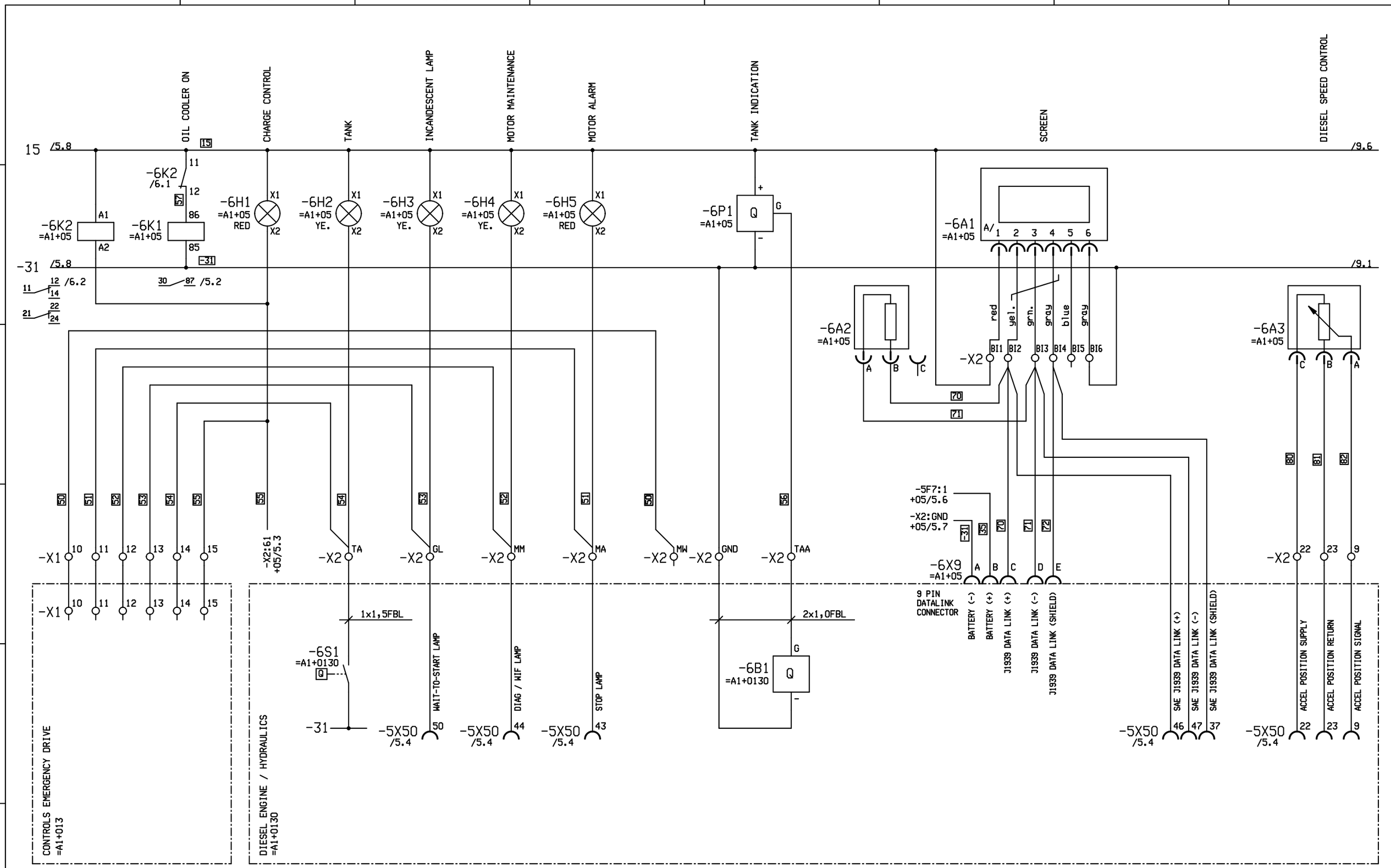

50 - 99

Revision	2.0	Drawn by	SST
Date	14.10.16	Dr.ch.by	Fma

File: NKWAA4186

10-MGD BaNa5
NKWAA4186
DANANG / VIETNAM

Doppelmayr ®
Innova Patent GmbH
A-6960 WOLFURT / AUSTRIA

CONTROL LIGHTS

DRIVE STATION | TERMINAL BOX EM. DRIVE / BRAKE HYD.

=A1+05

Date	25.04.16
Sheet :	6
Cont.sheet:	9

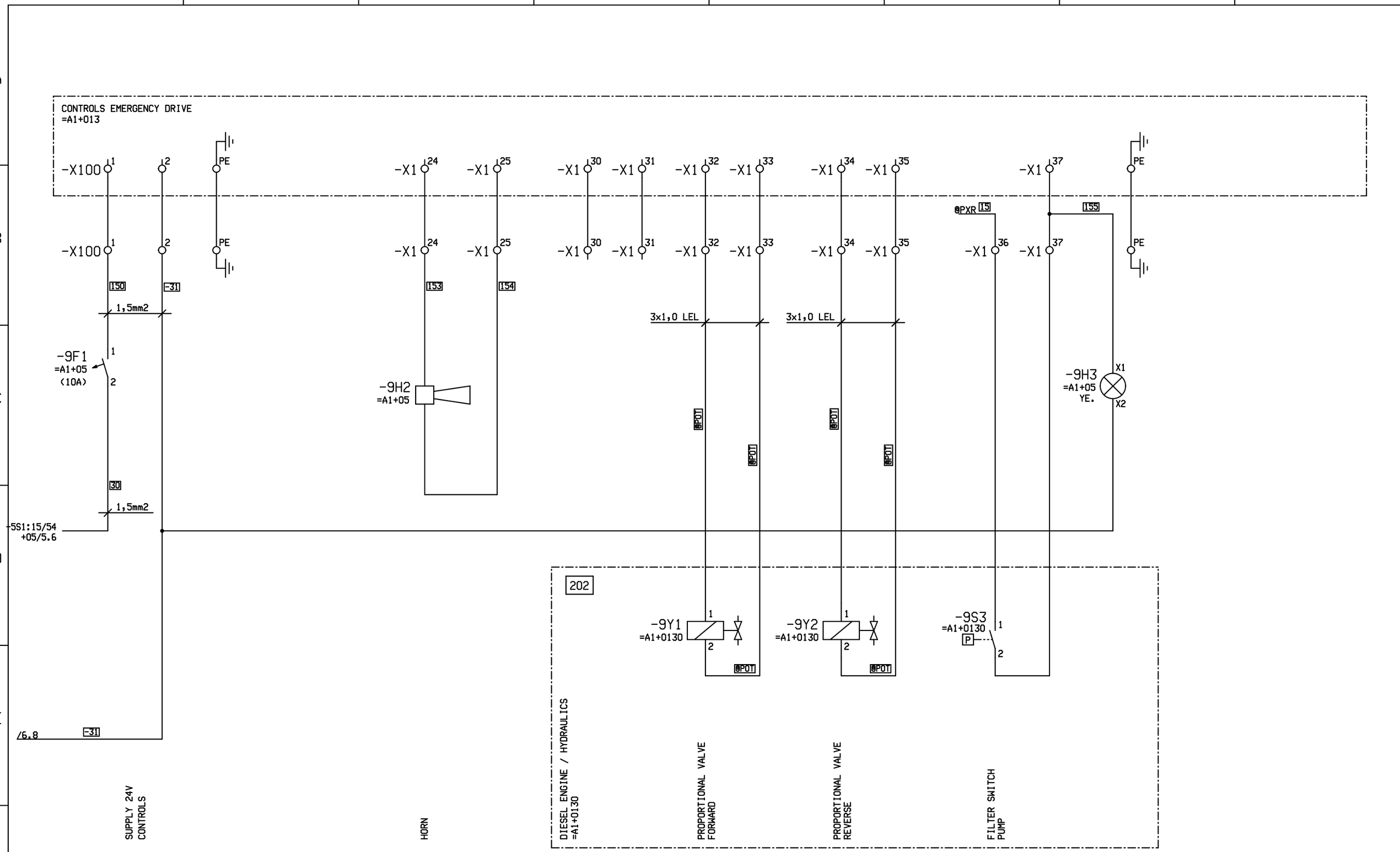

Revision	2.0	Drawn by	SST
Date	14.10.16	Dr.ch.by	Fma
File:	NKWAA4186		

10-MGD BaNa5
NKWAA4186
DANANG / VIETNAM

Doppelmayr ®
Innova Patent GmbH
A-6960 WOLFURT / AUSTRIA

DIESEL ENGINE

DRIVE STATION | TERMINAL BOX EM. DRIVE / BRAKE HYD.

=A1+05

Date	25.04.16
Sheet :	9
Cont.sheet:	~~@BLAT~~ +