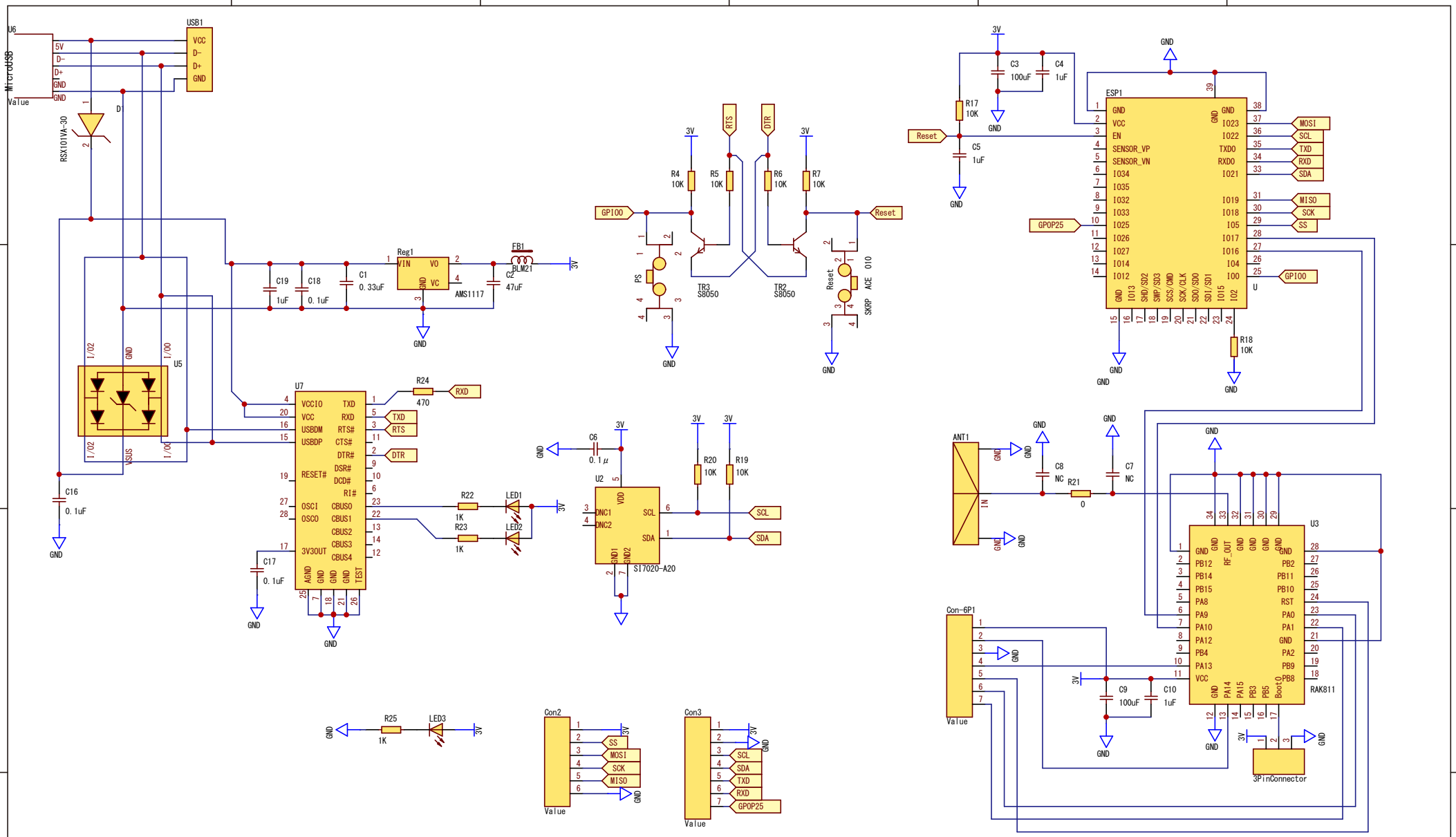

DESIGN	D.W.G	CHECK	APPROVAL

Title.	ESP-32 Gateway
No.	2018/06/27(修正)
Yosei Industry	A4 1/1