PhotoCouplerDesignReference:
https://toshiba.semicon-storage.com/jp/semiconductor/design-development/referencedesign/detail.RD048.html

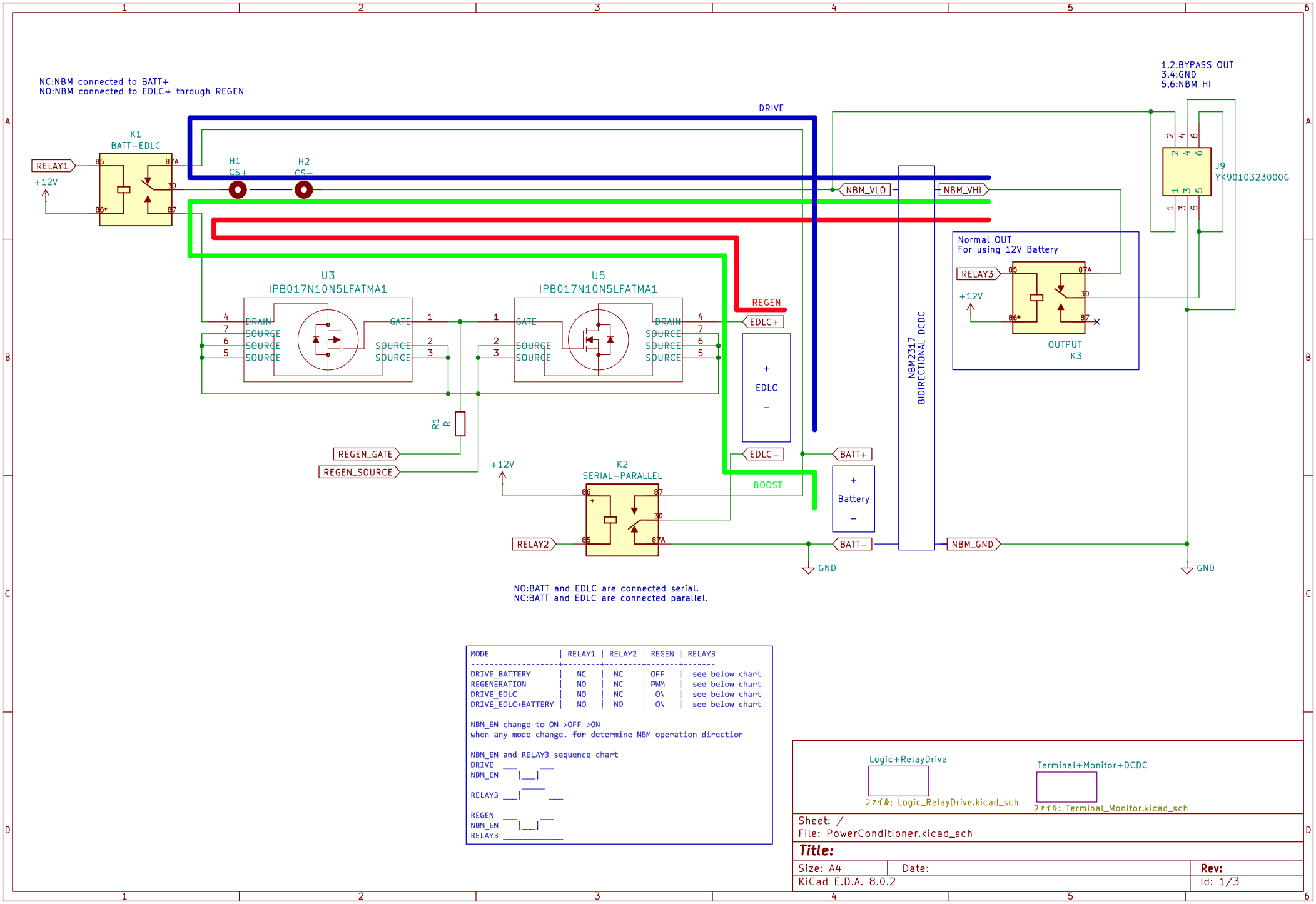

MODE	RELAY1	RELAY2	REGEN	RELAY3
DRIVE_BATTERY	NC	NC	OFF	see below chart
REGENERATION	NO	NC	PWM	see below chart
DRIVE_EDLC	NO	NC	ON	see below chart
DRIVE_EDLC+BATTERY	NO	NO	ON	see below chart

NBM_EN change to ON->OFF->ON
when any mode change. for determine NBM operation direction

NBM_EN and RELAY3 sequence chart

```
DRIVE   ___     ___
NBM_EN     |___|
            ____
RELAY3 ___|      |___

REGEN   ___     ___
NBM_EN     |___|
RELAY3 ____________
```

Logic+RelayDrive
ファイル: Logic_RelayDrive.kicad_sch

Terminal+Monitor+DCDC
ファイル: Terminal_Monitor.kicad_sch

Sheet: /
File: PowerConditioner.kicad_sch

Title:

Size: A4	Date:	Rev:
KiCad E.D.A. 8.0.2		Id: 1/3

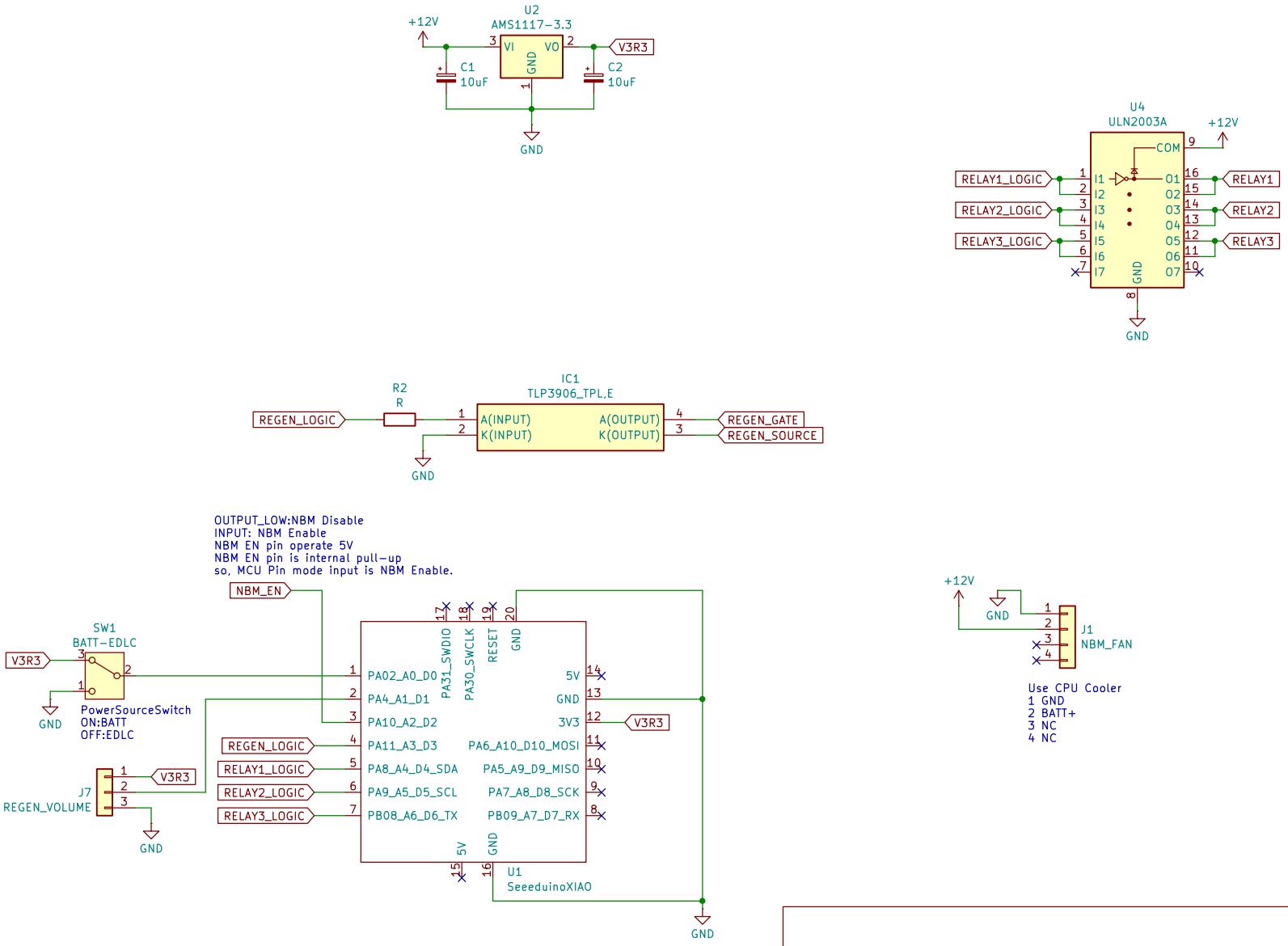

Sheet: /Logic+RelayDrive/
File: Logic_RelayDrive.kicad_sch

Title:

Size: A4	Date:	Rev:
KiCad E.D.A. 8.0.2		Id: 1/3

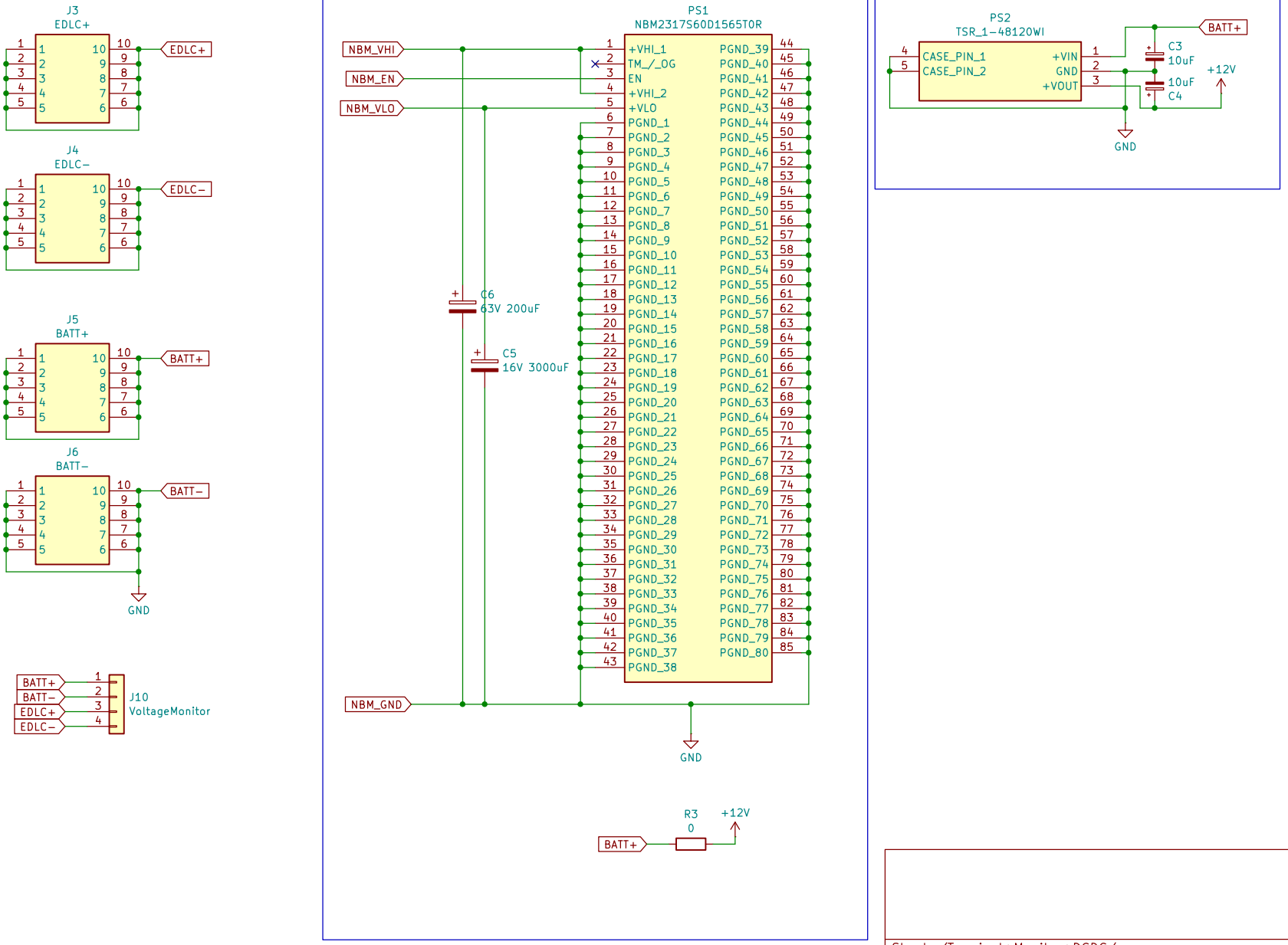

Sheet: /Terminal+Monitor+DCDC/
File: Terminal_Monitor.kicad_sch

Title:

Size: A4	Date:	Rev:
KiCad E.D.A. 8.0.2		Id: 1/3