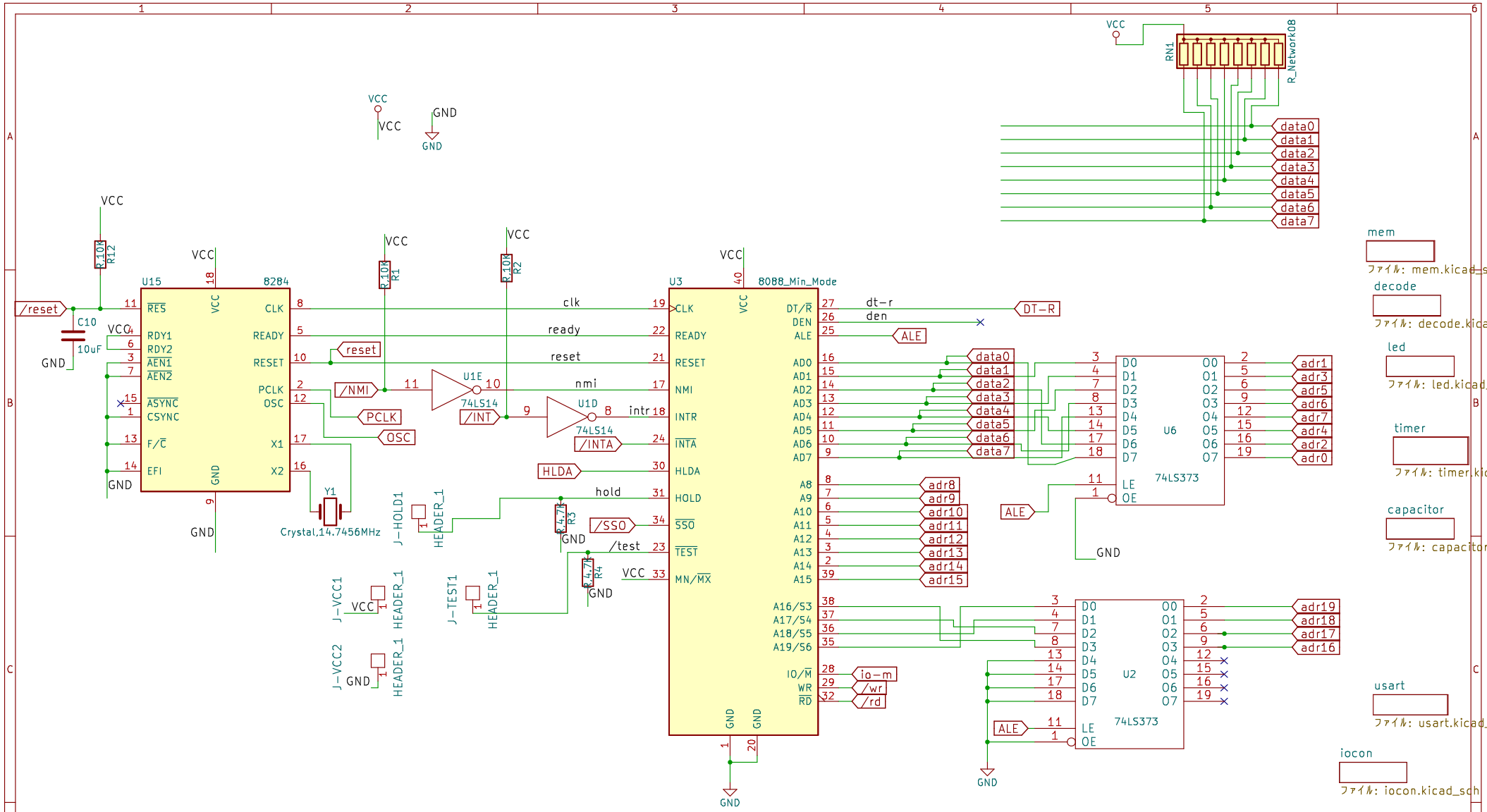

Sheet: /
File: takep8088v2a.kicad_sch

Title:

Size: A4	Date:	Rev:
KiCad E.D.A. kicad 7.0.11+dfsg-1build4		Id: 1/8

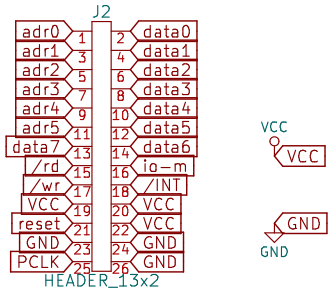

Sheet: /iocon/
File: iocon.kicad_sch

Title:

Size: A4	Date:	Rev:
KiCad E.D.A. kicad 7.0.11+dfsg-1build4		Id: 2/8

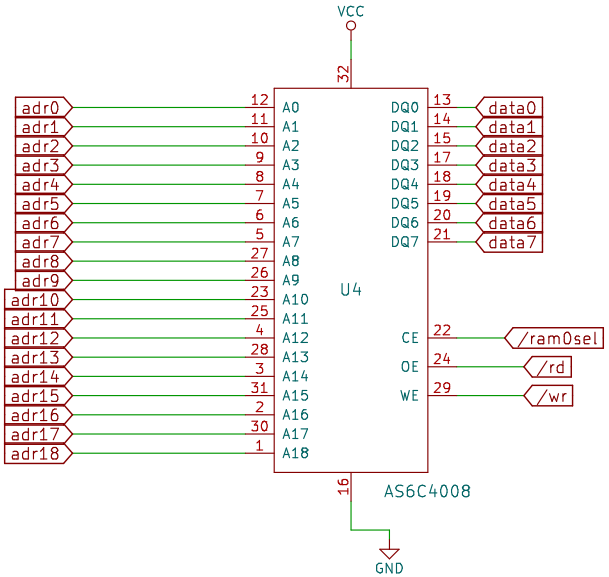

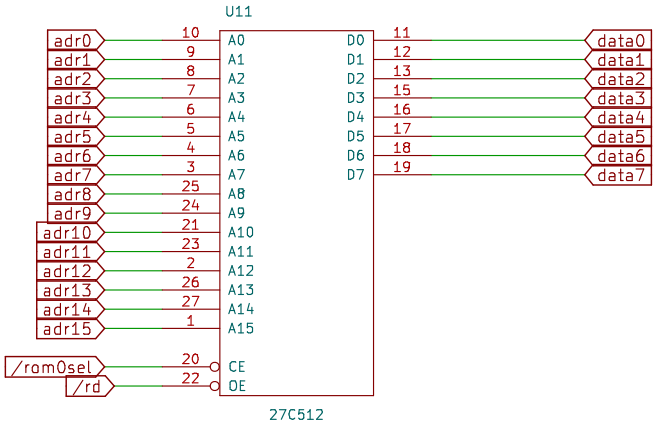

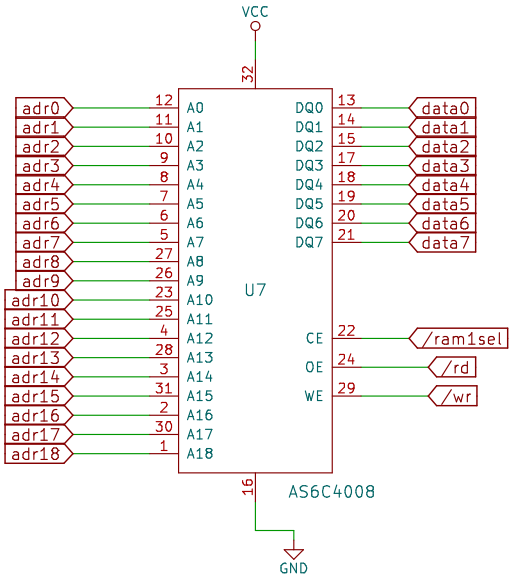

Sheet: /mem/
File: mem.kicad_sch

Title:

Size: A4	Date:	Rev:
KiCad E.D.A. kicad 7.0.11+dfsg-1build4		Id: 3/8

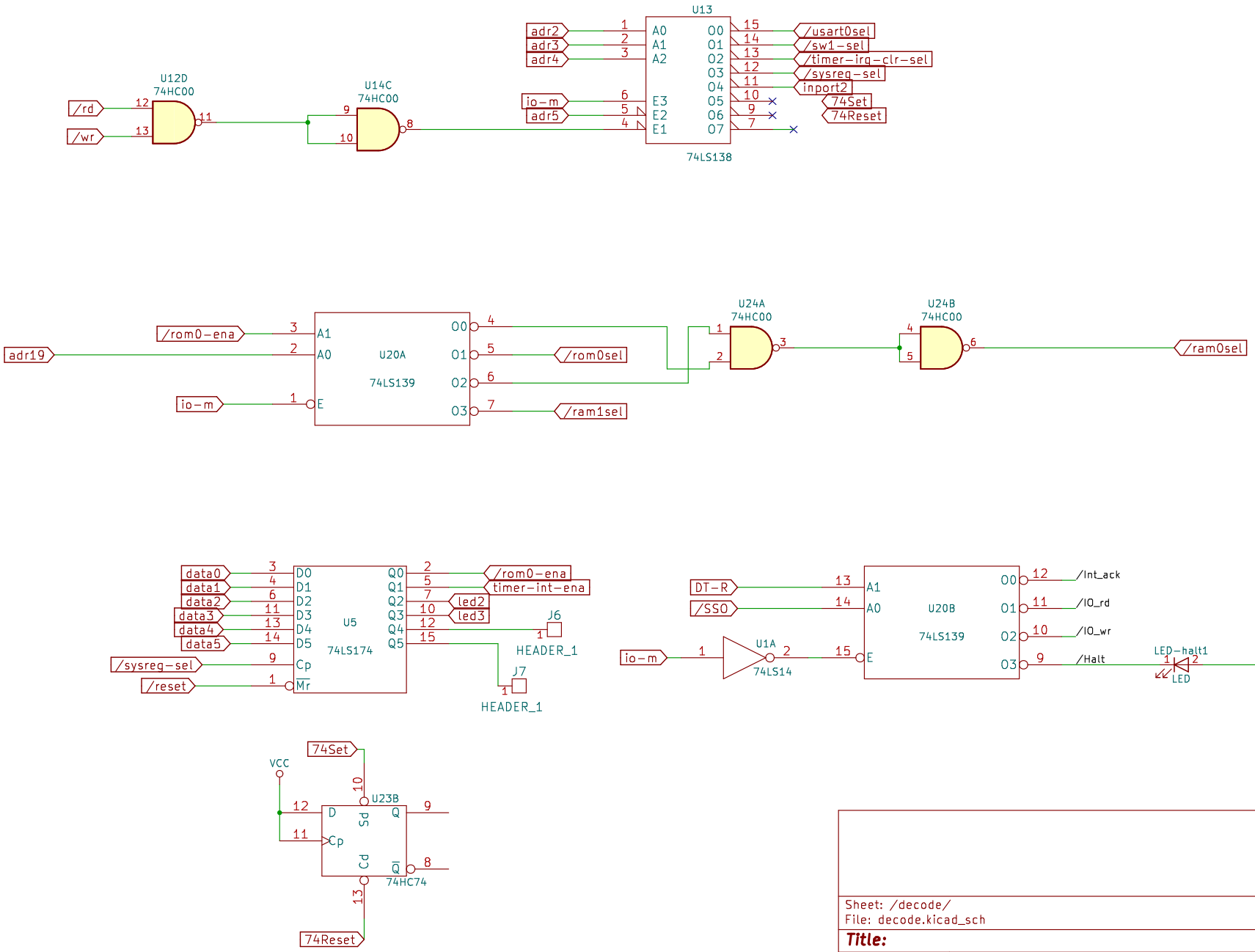

Sheet: /decode/
File: decode.kicad_sch

Title:

Size: A4	Date:	Rev:
KiCad E.D.A. kicad 7.0.11+dfsg-1build4		Id: 4/8

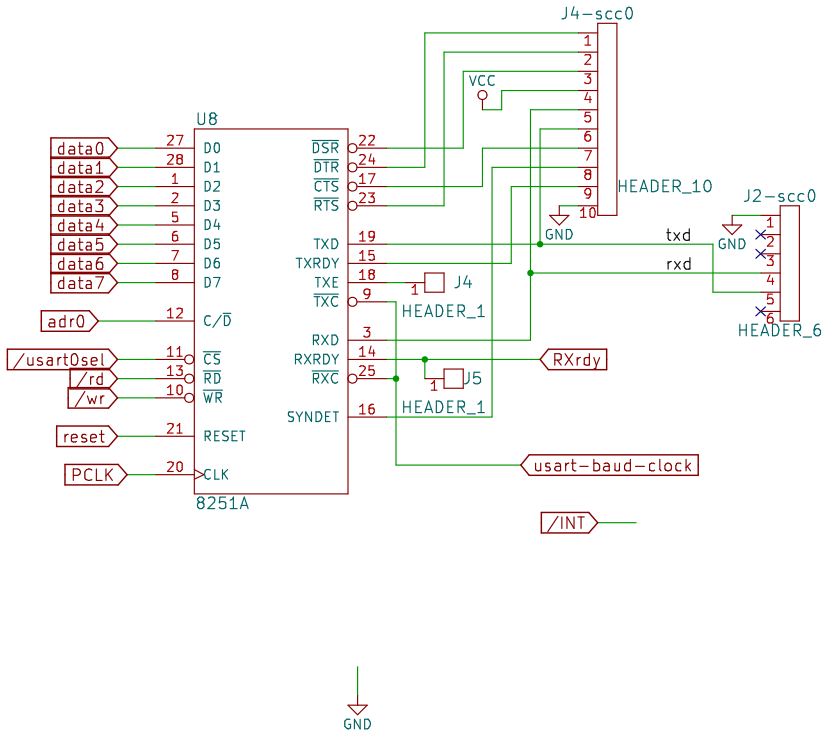

Sheet: /usart/
File: usart.kicad_sch

Title:

Size: A4	Date:	Rev:
KiCad E.D.A. kicad 7.0.11+dfsg-1build4		Id: 5/8

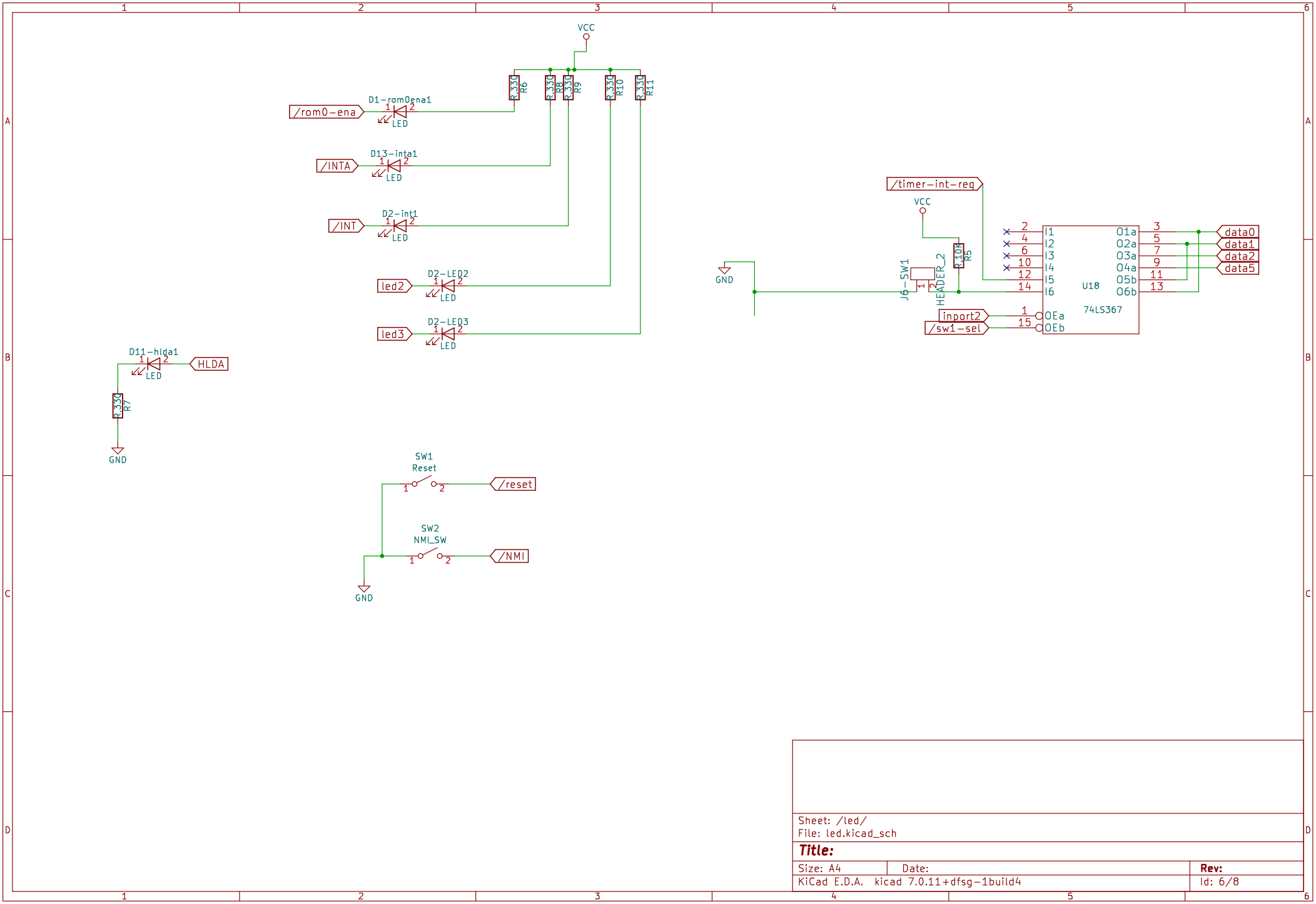
VCC
R330 R6
R330 R8
R330 R9
R330 R10
R330 R11
/rom0-ena
D1-rom0ena1
LED
/INTA
D13-inta1
LED
/INT
D2-int1
LED
led2
D2-LED2
LED
led3
D2-LED3
LED
D11-hlda1
LED
HLDA
R330 R7
GND
SW1
Reset
/reset
SW2
NMI_SW
/NMI
GND
/timer-int-req
VCC
R10K R5
J6-SW1
HEADER_2
GND
U18
74LS367
I1 I2 I3 I4 I5 I6
O1a O2a O3a O4a O5b O6b
OEa OEb
inport2
/sw1-sel
data0
data1
data2
data5
Sheet: /led/
File: led.kicad_sch
Title:
Size: A4
Date:
Rev:
KiCad E.D.A. kicad 7.0.11+dfsg-1build4
Id: 6/8

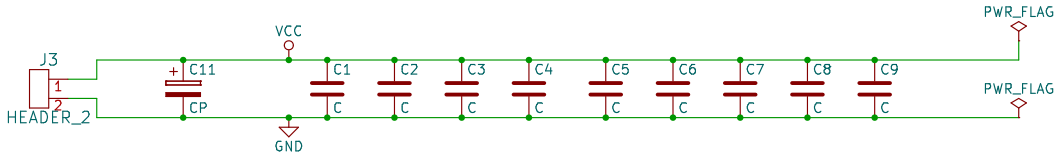

Sheet: /capacitor/
File: capacitor.kicad_sch

Title:

Size: A4	Date:	Rev:
KiCad E.D.A. kicad 7.0.11+dfsg-1build4		Id: 7/8

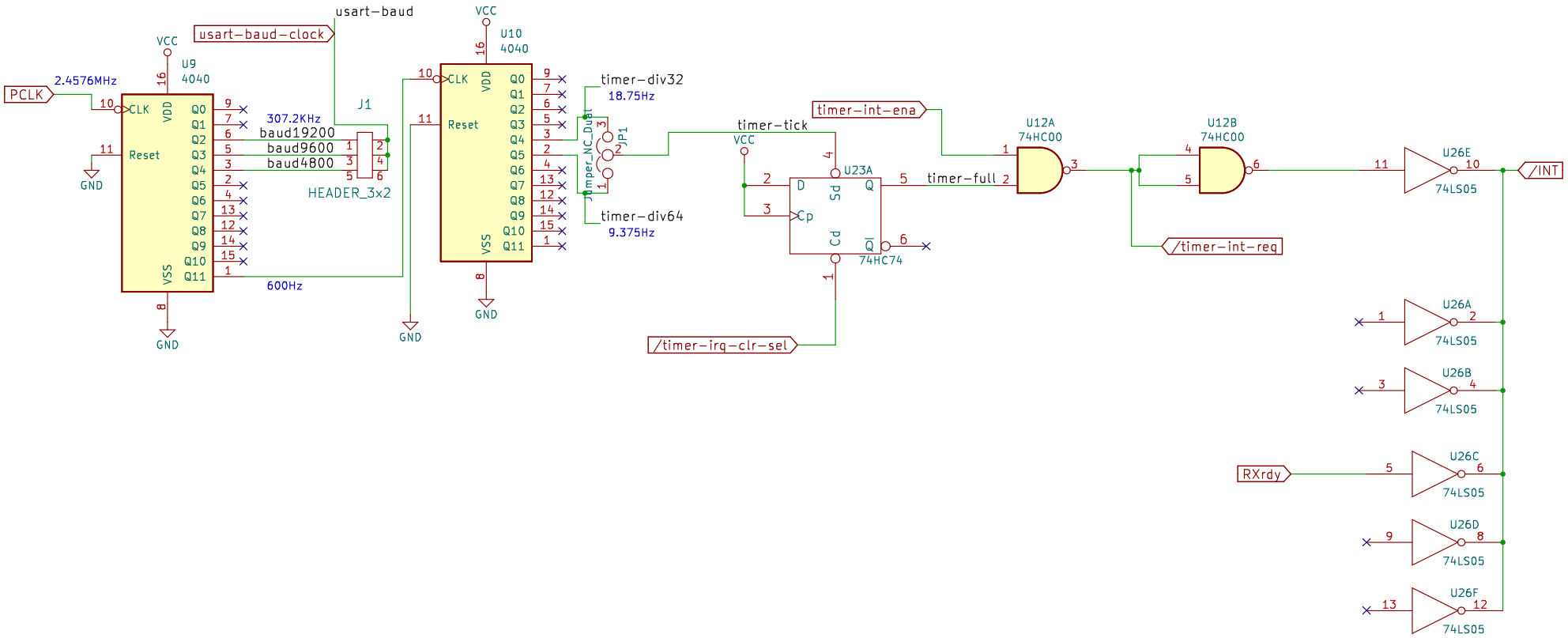

Sheet: /timer/
File: timer.kicad_sch

Title:

Size: A4	Date:	Rev:
KiCad E.D.A. kicad 7.0.11+dfsg-1build4		Id: 8/8