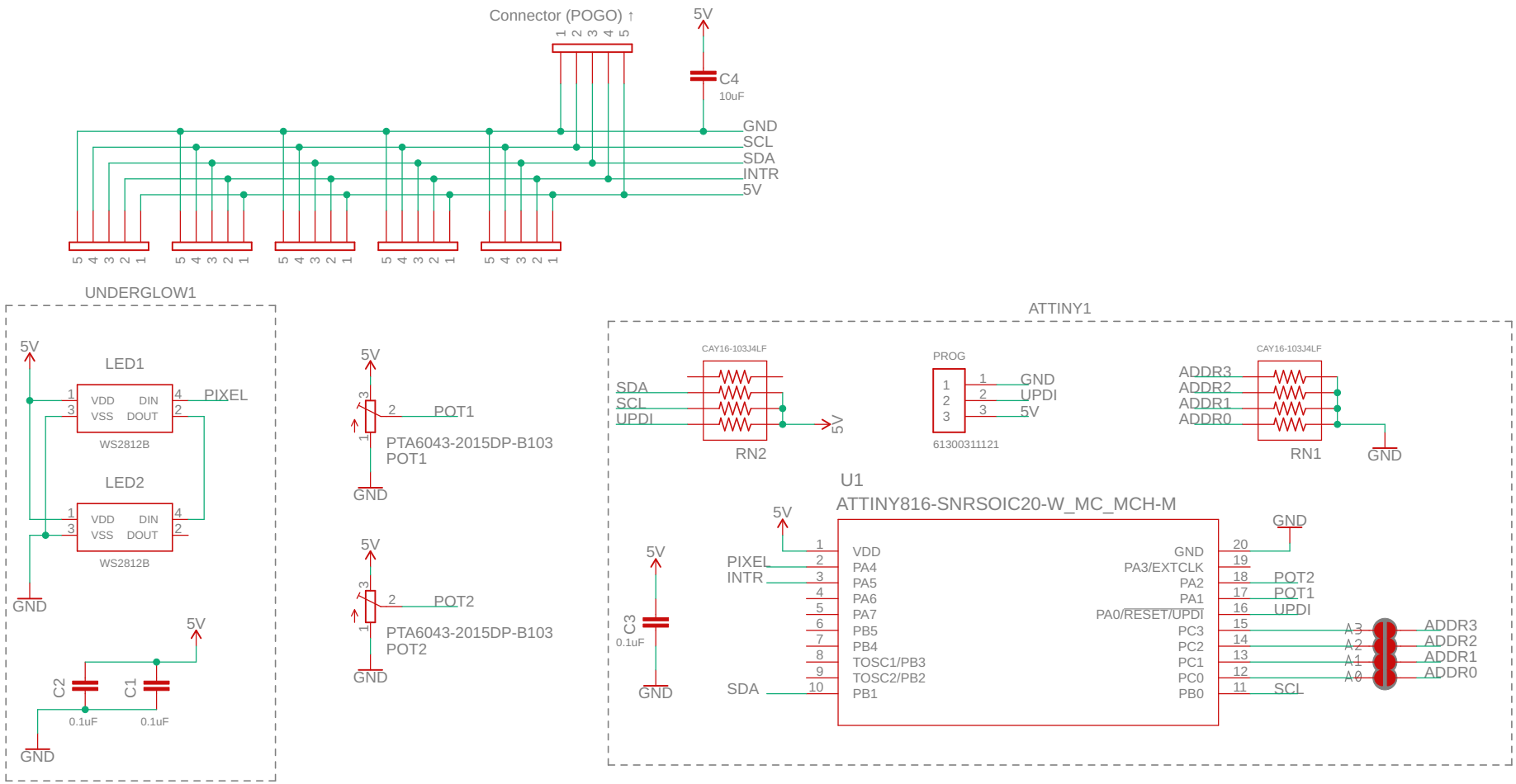

TITLE: Ocreeb MK 2 _faders half _schematic v16	
Document Number:	REV:
Date: 2024-02-04 3:18 PM	Sheet: 1/1