DC-Micromotors

137 mNm

Graphite Commutation

98,2 W

Series 3863 ... CR

Values at 22°C and nominal voltage	3863 H		012 CR	018 CR	024 CR	036 CR	048 CR	
Nominal voltage	U_N		12	18	24	36	48	V
Terminal resistance	R		0,161	0,365	0,663	1,55	2,59	Ω
Rotor inductance	L		44,3	92,4	177	398	708	µH
Efficiency, max.	$\eta_{max.}$		83	84	85	85	86	%
No-load current, typ.	I_0		0,338	0,234	0,163	0,113	0,0845	A
No-load speed	n_0		5 680	5 990	5 800	5 840	5 860	min^{-1}
Stall torque	M_H		1 410	1 370	1 410	1 370	1 460	mNm
Rotor inertia	J		120	110	120	110	115	gcm^2
Friction torque	M_R		6,5	6,5	6,5	6,5	6,5	mNm
Torque constant	k_M		19,9	28,8	39,8	59,8	79,7	mNm/A
Speed constant	k_n		479	332	240	160	120	min^{-1}/V
Slope of n-M curve	$\Delta n/\Delta M$		3,88	4,21	3,99	4,13	3,89	min^{-1}/mNm
Thermal resistance:								
– winding to housing	R_{th1}	2,8						K/W
– housing to ambient (external plastic flange)	$R_{th2\,p}$	7,7						K/W
– housing to ambient (external metal flange)	$R_{th2\,m}$	1,5						K/W
Thermal time constant:								
– winding	τ_{w1}	58						s
– housing (external plastic flange)	$\tau_{w2\,p}$	1 200						s
– housing (external metal flange)	$\tau_{w2\,m}$	240						s
Operating temperature range:								
– motor		-30 ... +125						°C
– winding, max. permissible		+155						°C
Shaft bearings		ball bearings, preloaded						
Shaft diameter		6						mm
Radial shaft load max.:								
– dynamic at 3 000 min^{-1} (4,5 mm from mounting flange)		60						N
Axial shaft load max.:								
– dynamic at 3 000 min^{-1}		6						N
– static (shaft unsupported)		50						N
– static (shaft supported)		2 800						N
Shaft play, max.:								
– radial		0,015						mm
– axial		0						mm
Speed up to	$n_{max.}$	7 000						min^{-1}
Number of pole pairs		1						
Mass		390						g
Housing material		steel, nickel plated						
Magnet material		NdFeB						

Rated values for continuous operation								
Rated torque	M_N		69,5	99,5	131	132	137	mNm
Rated current (thermal limit)	I_N		4	4	4	2,71	2,1	A
Rated speed	n_N		5 400	5 630	5 440	5 450	5 510	min^{-1}

Note: Rated values are calculated with nominal voltage and at a 22°C ambient temperature. The $R_{th2\,p}$ value has been reduced by 50%.

Note:

The diagram indicates the recommended speed in relation to the available torque at the output shaft for a given ambient temperature of 22°C.

The diagram shows the motor in different conditions of thermal coupling, i.e. mounted respectively on a plastic flange and a metal flange.

The nominal voltage (U_N) curve shows, up to the thermal limit, the operating point at nominal voltage for the motor mounted on a plastic flange. Higher torque can be achieved by further reducing the thermal resistance.

Any points of operation above the curve at nominal voltage will require a higher operating voltage. Any points below the nominal voltage curve will require less voltage.

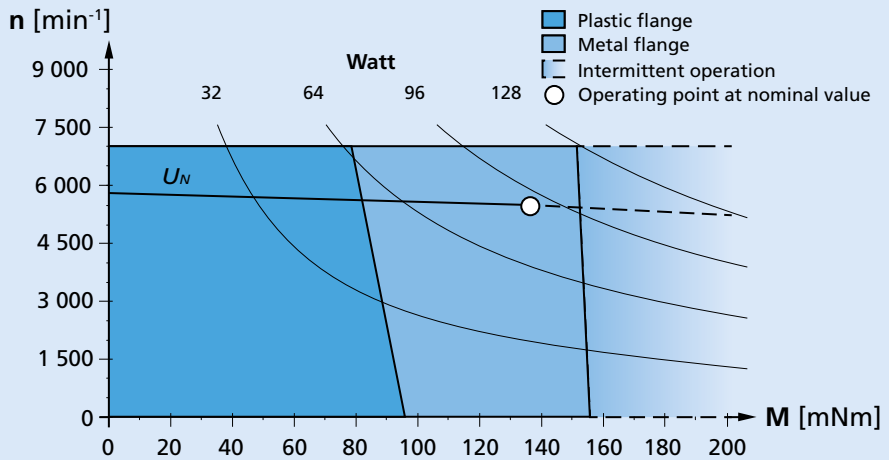

Recommended operation areas (example: nominal voltage 48V)

For notes on technical data and lifetime performance refer to "Technical Information".

© DR. FRITZ FAULHABER GMBH & CO. KG
Specifications subject to change without notice.

Dimensional drawing

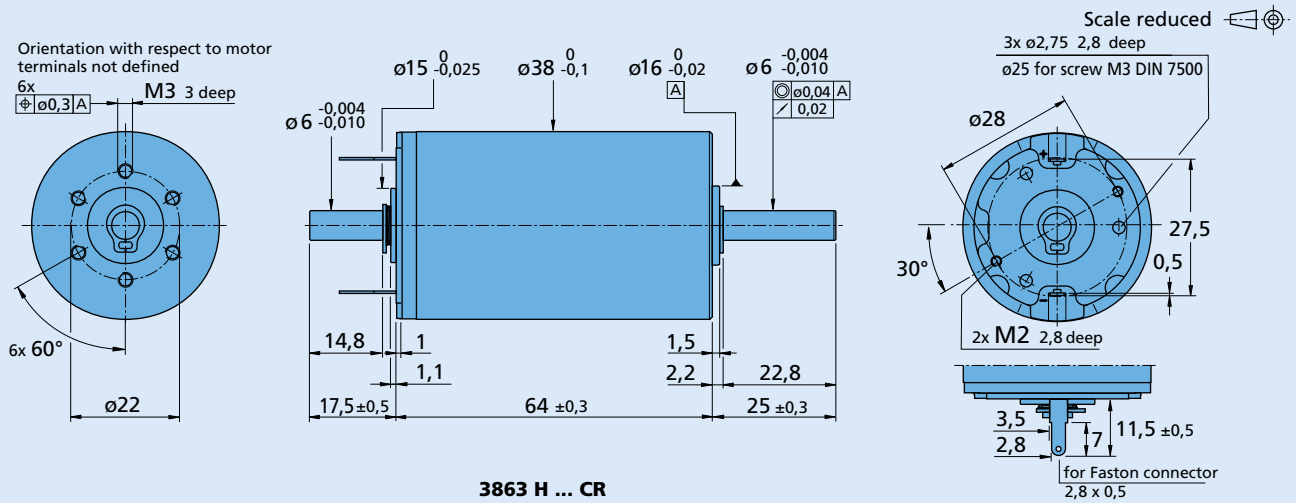

3863 H ... CR

Options

Example product designation: **3863H012CR-158**

Option	Type	Description
U	Single Leads	For motors with single leads (PTFE), length 160 mm, red (+) / black (-)
158	Shaft end	No second shaft end
2016	Encoder combination	Motor with rear end shaft for combination with Encoder IE3, IERS3 and IER3
1387	Brakes combination	For combination with Brakes MBZ

Product combination

Precision Gearheads / Lead Screws	Encoders	Drive Electronics	Cables / Accessories
32GPT HT	IE3-1024	SC 2804 S	MBZ
38/1	IE3-1024 L	SC 5004 P	
38/1 S	IERS3-500	SC 5008 S	To view our large range of accessory parts, please refer to the “Accessories” chapter.
38/2	IERS3-500 L	MC 3606 B	
38/2 S	IER3-10000	MC 5010 S	
42GPT	IER3-10000 L		
44/1			

For notes on technical data and lifetime performance refer to “Technical Information”.

© DR. FRITZ FAULHABER GMBH & CO. KG
Specifications subject to change without notice.