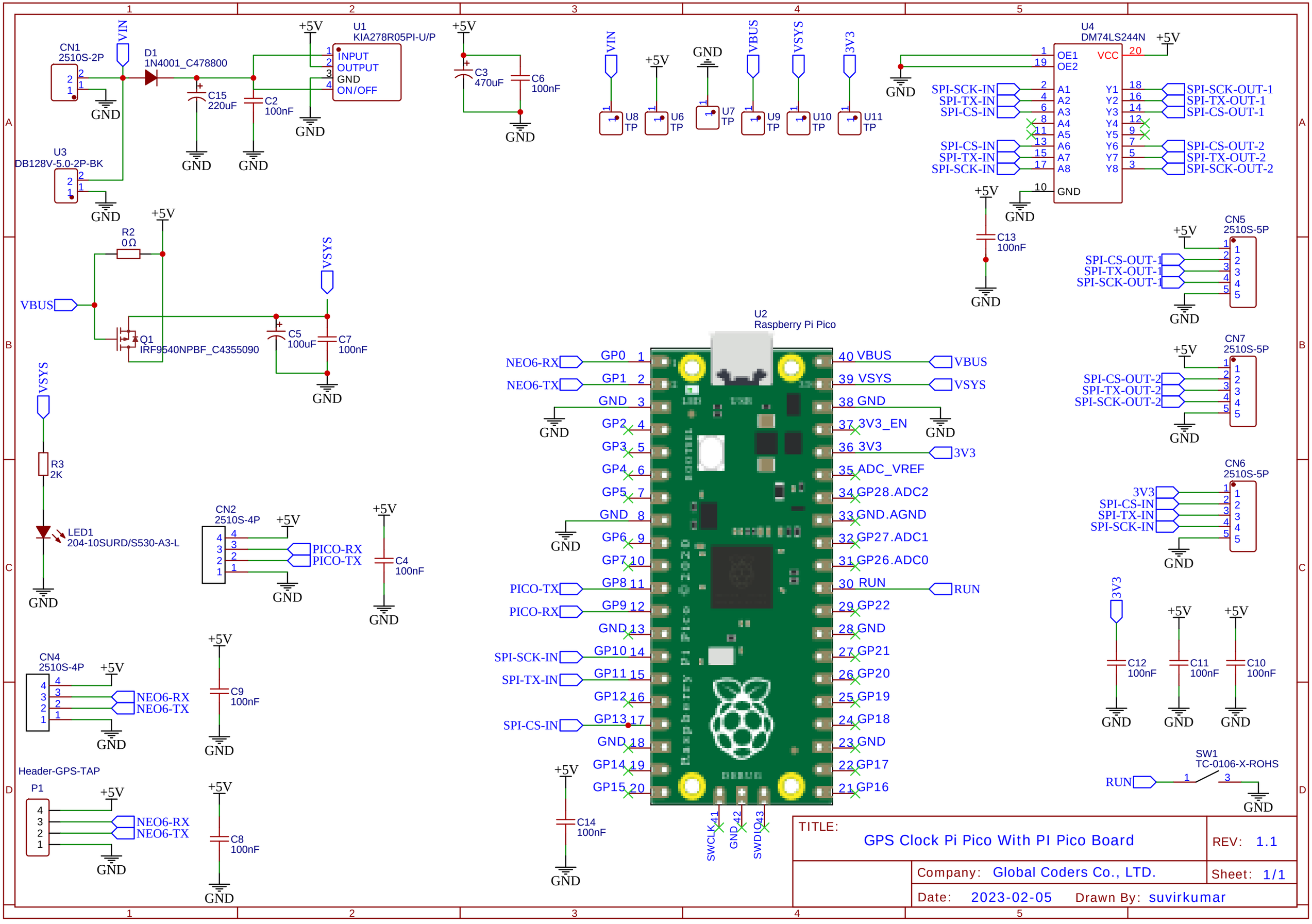
CN1
2510S-2P
VIN
D1
1N4001_C478800
C15
220uF
C2
100nF
+5V
U1
KIA278R05PI-U/P
INPUT
OUTPUT
GND
ON/OFF
GND
U3
DB128V-5.0-2P-BK
C3
470uF
C6
100nF
U8
TP
U6
TP
U7
TP
U9
TP
U10
TP
U11
TP
VBUS
VSYS
3V3
U4
DM74LS244N
OE1
OE2
VCC
A1
A2
A3
A4
A5
A6
A7
A8
Y1
Y2
Y3
Y4
Y5
Y6
Y7
Y8
SPI-SCK-IN
SPI-TX-IN
SPI-CS-IN
SPI-SCK-OUT-1
SPI-TX-OUT-1
SPI-CS-OUT-1
SPI-CS-OUT-2
SPI-TX-OUT-2
SPI-SCK-OUT-2
C13
100nF
CN5
2510S-5P
CN7
2510S-5P
CN6
2510S-5P
R2
0Ω
Q1
IRF9540NPBF_C4355090
C5
100uF
C7
100nF
R3
2K
LED1
204-10SURD/S530-A3-L
CN2
2510S-4P
PICO-RX
PICO-TX
C4
100nF
CN4
2510S-4P
NEO6-RX
NEO6-TX
C9
100nF
Header-GPS-TAP
P1
C8
100nF
U2
Raspberry Pi Pico
GP0
GP1
GND
GP2
GP3
GP4
GP5
GP6
GP7
GP8
GP9
GP10
GP11
GP12
GP13
GP14
GP15
VBUS
VSYS
3V3_EN
3V3
ADC_VREF
GP28.ADC2
GND.AGND
GP27.ADC1
GP26.ADC0
RUN
GP22
GP21
GP20
GP19
GP18
GP17
GP16
SWCLK
SWDIO
C14
100nF
C12
100nF
C11
100nF
C10
100nF
SW1
TC-0106-X-ROHS
TITLE:
GPS Clock Pi Pico With PI Pico Board
REV: 1.1
Company: Global Coders Co., LTD.
Sheet: 1/1
Date: 2023-02-05
Drawn By: suvirkumar