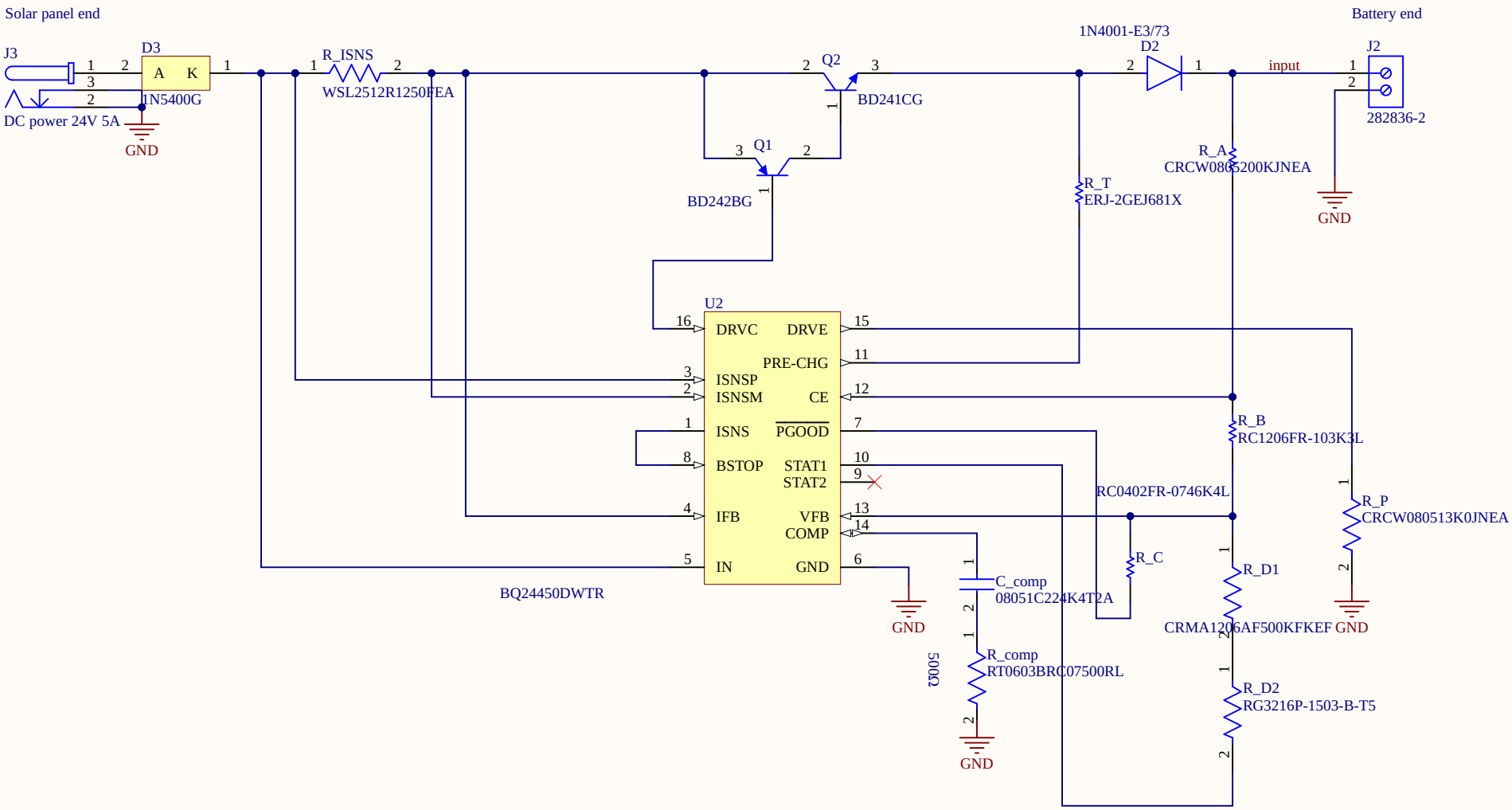

Title	Charge Controller for SLA Battery	
Size A	Number	Revision
Date: 10/31/2025		Sheet of
File: C:\Users\..\charge_controller.SchDoc		Drawn By: Samuel Ramos

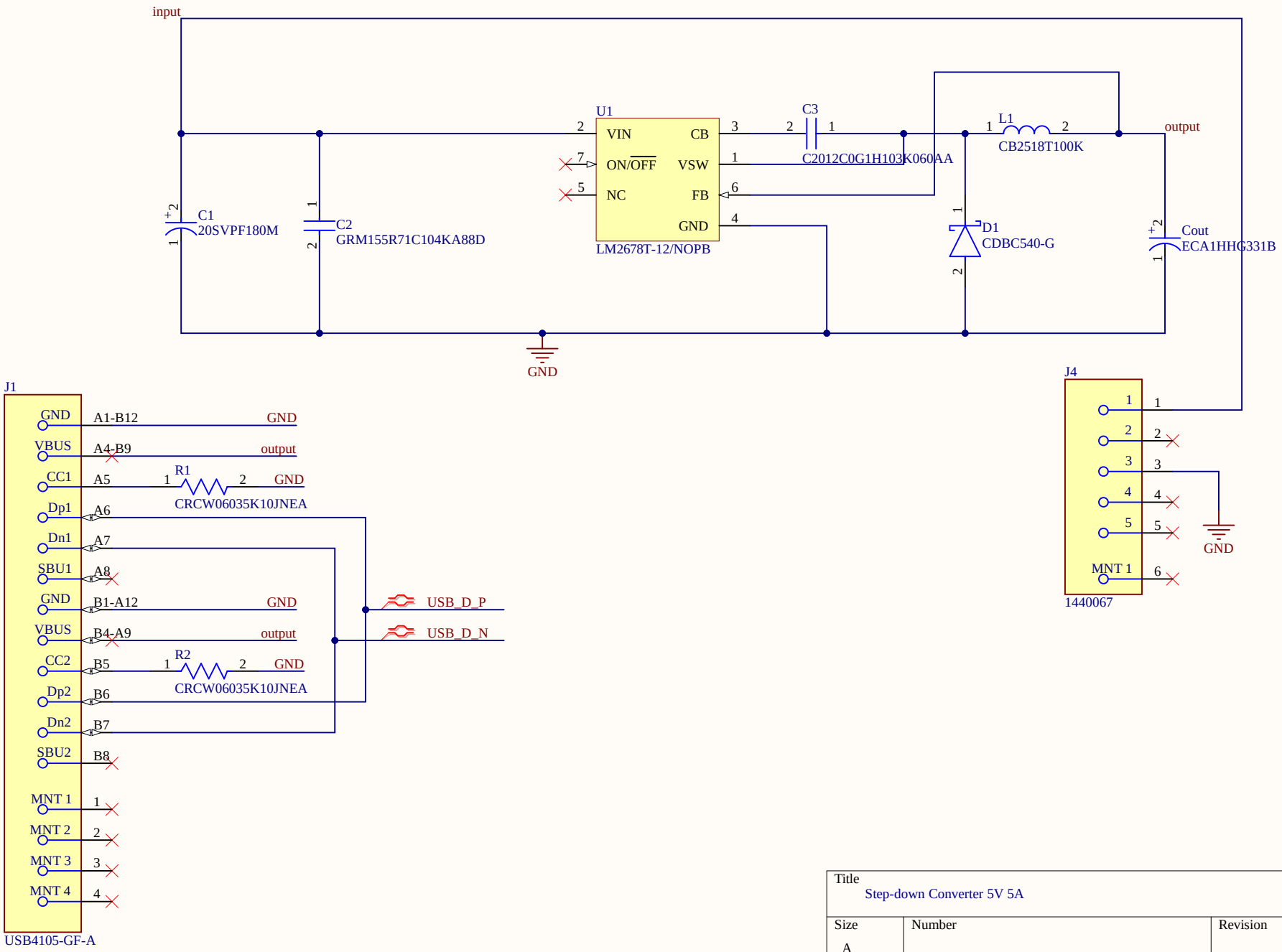

Title: Step-down Converter 5V 5A		
Size: A	Number	Revision
Date: 10/31/2025		Sheet of
File: C:\Users\..\buck_converter.SchDoc		Drawn By: Samuel Ramos

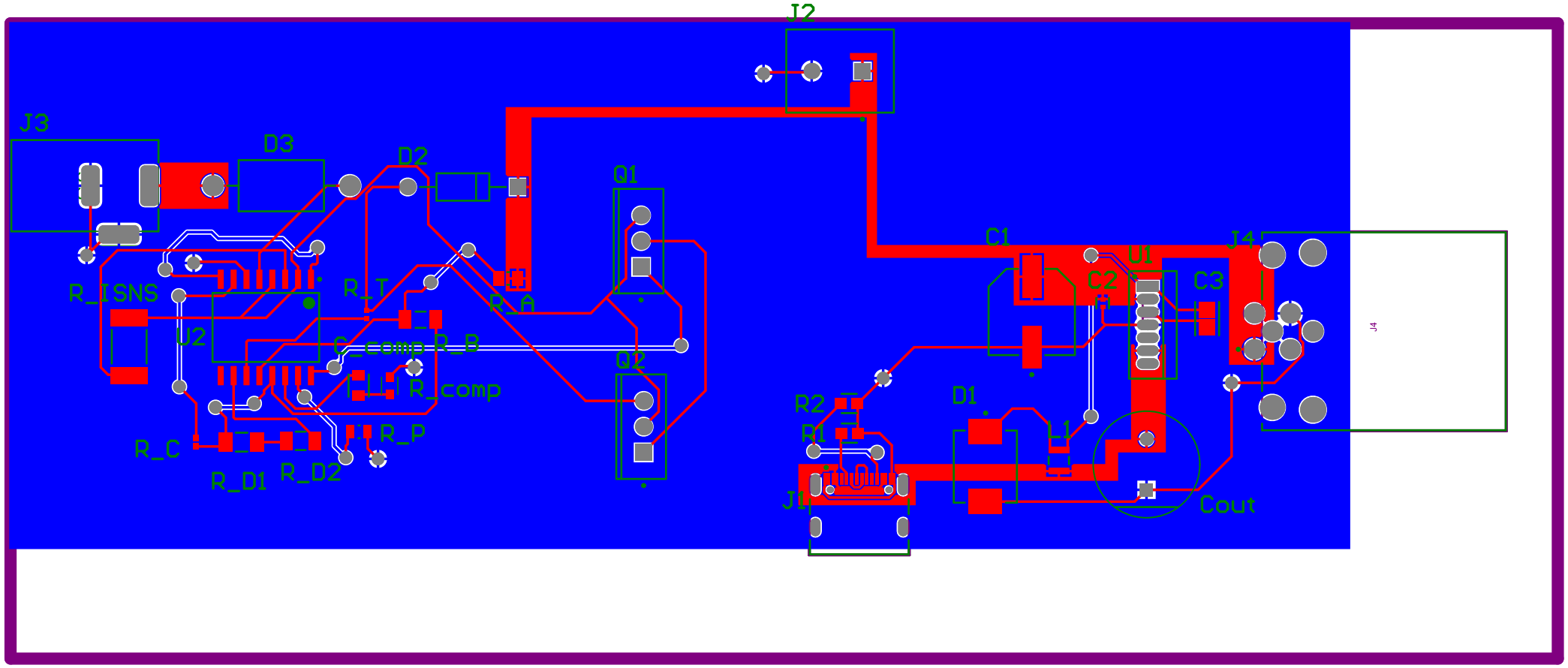
J2
J3
D3
D2
Q1
C1
U1
J4
C2
C3
R_ISNS
R_T
R_A
U2
C_comp
R_B
Q2
R_comp
R2
D1
R1
L1
R_C
R_P
R_D1
R_D2
J1
Cout

Board Stack Report