Specifications

TFT-LCD module

Model No：AML055-FHD-056A

For Customer's Acceptance	
Approved by	**Comment**

	Signature	Date
Prepared by		
Checked by		
Approved by		

Contents

[illegible]	ITEM
[illegible]	DOCUMENT REVISION HISTORY
[illegible]	GENERAL DESCRIPTION
[illegible]	OUTLINE DIMENSION
[illegible]	TFT-LCM INTERFACE SPECIFICATION
[illegible]	ABSOLUTE MAXIMUM RATINGS
[illegible]	ELECTRICAL SPECIFICATIONS
[illegible]	TIMING CHARACTERISTICS
[illegible]	POWER SUPPLY CONFIGURATION
[illegible]	OPTICAL SPECIFICATION
[illegible]	RELIABILITY TEST ITEMS
[illegible]	PACKAGE
[illegible]	PRECAUTIONS
[illegible]	INSPECTION STANDARD

1. Document revision History :

DOCUMENT	DATE	DESCRIPTION	PREPARED	APPROVED
A	2020.12.17	First Release.		

a) General Description

AML055-FHD-056A is a transmissive type a-Si TFT-LCD (amorphous silicon thin film transistor liquid crystal display) module, which is composed of a TFT-LCD panel, a driver circuit a backlight unit, The panel size is 5.46inch and the resolution is 1080X1920. High image quality a-Si TFT LCD module. Partial-screen display function is available. Sleep and Stand-by modes are available for power saving.

- **Features**

No	Item	Specification	Remark
1	Display Mode	Normally Black	
2	Screen Size	5.46inch	
3	Resolution	1080 RGB 1920	
4	Color Number	262K	
5	Color Arrangement	TFT Active Matrix	
6	Driver IC	ILI7807D	
7	Back Light	White LED 7*2	
8	Viewing Direction	ALL DIRECTION	
9	Interface	MIPI	
10	Surface Treatment	UV Cut	
11	touch panel		

- **Application**

◈ Mobile phone.

◈ Portable multimedia device.

b) Outline Dimension

The mechanical detail is shown in Fig. 1 and summarized in Table 1 below.

Parameter	Specifications	Uni
Outline dimensions	70.60(W)X128.50(H) 1.48+-0.1(D) (LCM, not include	mm
Active area	68.04 (W) 120.96(H)	mm
Resolution	1080(H)RGB 1920(V) dots	-
Dot size	0.063(H) 0.063(V)	mm

Figure 1: Module specification of the modul

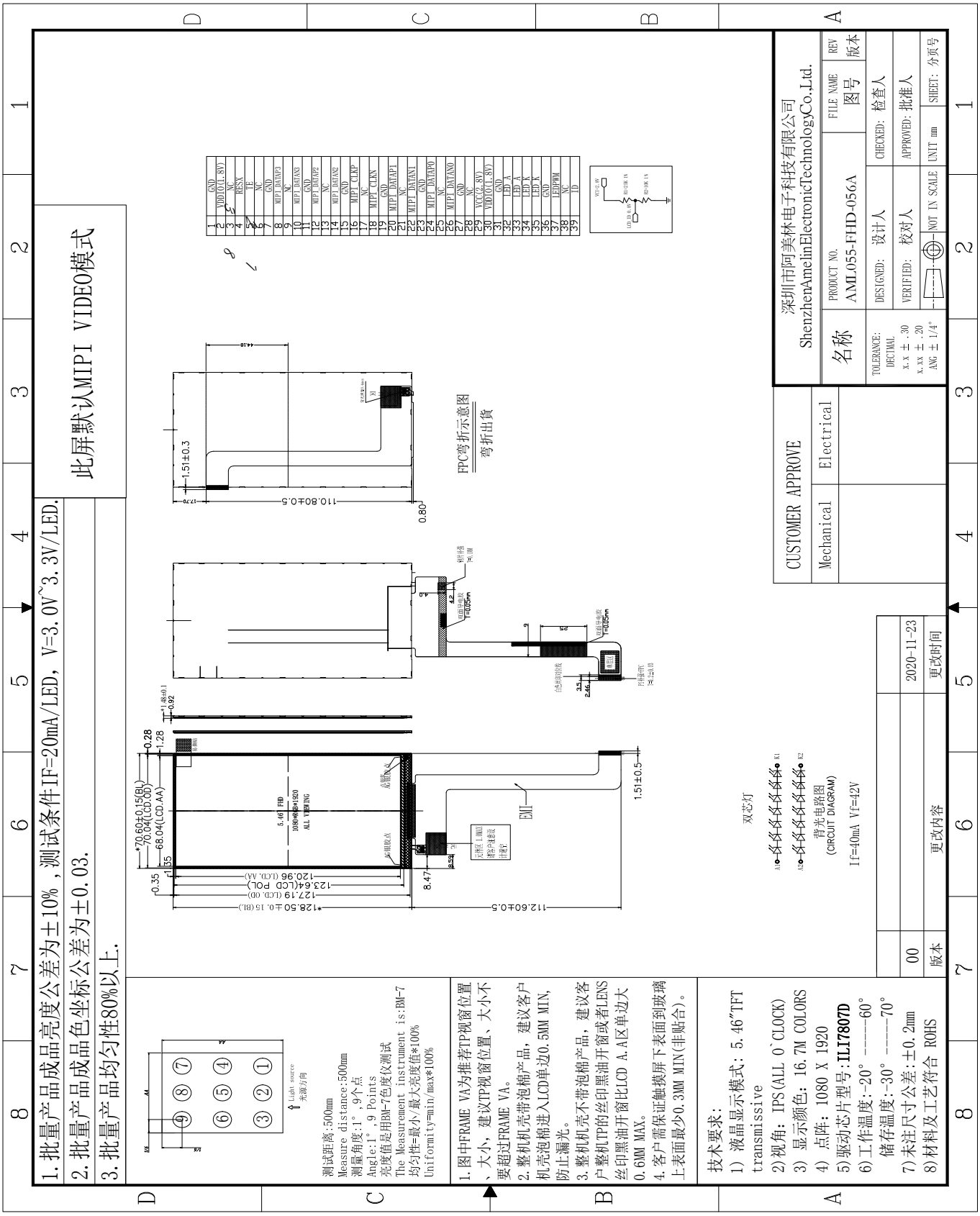

c) TFT-LCM Interface Specification

NO	SYMBOL	FUNCTION
1	GND	GROUND
2	VDDIO(1.8V)	POWER SUPPLY FOR INTERFACE PINS(1.8V)
3	NC	NC
4	RESX	NC
5	TE	FMARK SIGNAL
6	NC	NC
7	GND	GROUND
8	D3P	MIPI-DSI DATA LANE 3 POSITIVE-END INPUT/OUTPUT PIN
9	NC	NC
10	D3N	MIPI-DSI DATA LANE 3 POSITIVE-END INPUT/OUTPUT PIN
11	GND	GROUND
12	D2P	MIPI-DSI DATA LANE 2 POSITIVE-END INPUT/OUTPUT PIN
13	NC	NC
14	D2N	MIPI-DSI DATA LANE 2 POSITIVE-END INPUT/OUTPUT PIN
15	GND	GROUND
16	CP	MIPI-DSI CLOCK LANE POSITIVE-END INPUT PIN
17	NC	NC
18	CN	MIPI-DSI CLOCK LANE POSITIVE-END INPUT PIN
19	GND	GROUND
20	D1P	MIPI-DSI DATA LANE 1 POSITIVE-END INPUT/OUTPUT PIN
21	NC	NC
22	D1N	MIPI-DSI DATA LANE 1 POSITIVE-END INPUT/OUTPUT PIN
23	GND	GROUND
24	D0P	MIPI-DSI DATA LANE 0 POSITIVE-END INPUT/OUTPUT PIN
25	NC	NC
26	D0N	MIPI-DSI DATA LANE 0 POSITIVE-END INPUT/OUTPUT PIN
27	GND	GROUND
28	NC	NC
29	VCC/VIO28_PMU	POWER SUPPLY FOR INTERFACE PINS(2.8V)
30	VDDIO(1.8V)	POWER SUPPLY FOR INTERFACE PINS(1.8V)
31	GND	GROUND

32-33	LEDA	BACK LIGHT +
34-35	LEDK	BACK LIGHT -
36	GND	GROUND
37	LEDPWM	LEDPWM
38	NC	NC
39	ID	ID

(a)Absolute Maximum Ratings

5.1 Electrical Maximum Ratings – for IC Only

Table 3: Electrical Maximum Ratings – for IC

Parameter	Symbol	Min.	Max.	Un	Not
Power supply voltage (VCC)	VCC	-0.3	+4.0	V	1
Power supply voltage (IOVCC)	IOVCC	-0.3	+3.6	V	1

Note:

- IOVCC,VCI, GND must be maintained.
- The modules may be destroyed if they are used beyond the absolute maximum ratings.

5.2 Environmental Condition

Table 4

Item	Operating temperature (Topr)		Storage temperature (Tstg) (Note 1)		Remark
	Min.	Max.	Min.	Max.	
Ambient temperature	-20℃	+60℃	-30℃	+70℃	Dry
Humidity (Note 1)	80% max. RH for Ta 40℃< 50% RH for 40℃ < Ta Maximum operating temperature				No condensation

Note 1: Product cannot sustain at extreme storage conditions for long time.

(b) Electrical Specifications

Typical Electrical Characteristics

At Ta = 25 ℃, VCC = 2.6V to 3.3V, IOVCC= 1.65V to 3.3V GND=0V.

Parameter	Symbol	Conditions	Min.	Typ.	Max.	Unit
Supply voltage (analog)	VCC-GND		2.6	2.8	3.3	V
Supply voltage (logic)	IOVCC-		1.65	1.8	3.3	V
Supply current	ICC	VCI=2.8V	-	-	60	mA
Supply voltage of white LED backlight	VLED =V(BL+)-V(BL-)	Forward current =40 mA Number of LED dies = 14	-	42	-	V
Luminance (on the module surface)			700	--	800	cd/m2

7.Timing Characteristics

High Speed Data Transmission: Data-Clock Timing

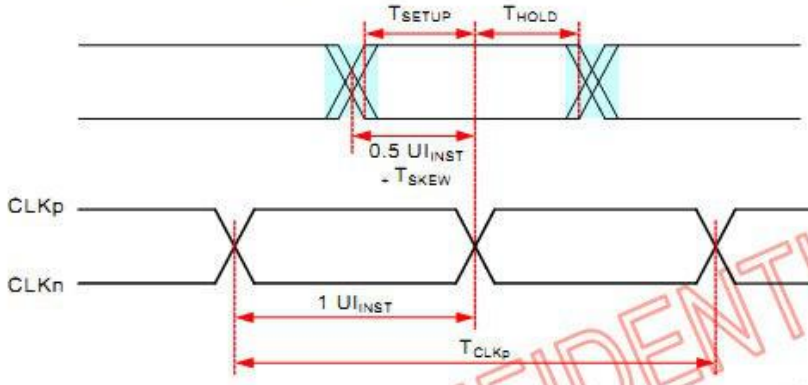

Parameter	Symbol	Min	Typ	Max	Units	Notes
UI instantaneous	UI_{INST}	1		12.5	ns	1,2,10
Data to Clock Skew [measured at tansmitter]	$T_{SKEW}[TX]$	-0.15		0.15	UI_{INST}	3
		-0.2		0.2	UI_{INST}	4
Data to Clock Setup Time [measured at receiver]	$T_{SETUP}[RX]$	-0.15		0.15	UI_{INST}	5
		-0.2		0.2	UI_{INST}	6
Data to Clock Hold Time [measured at reciever]	$T_{HOLD}[RX]$	-0.15		0.15	UI_{INST}	5
		-0.2		0.2	UI_{INST}	6
20% - 80% rise time and fall time	t_R / t_F	100			ps	9
				0.3	UI_{INST}	7
				0.35	UI_{INST}	8

Note:

1. This value corresponds to a minimum 80 MHz data rate.

2. The minimum UI shall not be violated for any single bit period, i.e.,any DDR half cycle within a data burst.

3. Total silicon and package delay budget of 0.3 UIINST when D-PHY is supporting maximum data rate = 1Gbps.*

4. Total silicon and package delay budget of 0.4 UIINST when D-PHY is supporting maximum data rate > 1Gbps.*

5. Total setup and hole window for receiver of 0.3 UIINST when D-PHY is supporting maximum data rate = 1Gbps.*

6. Total setup and hole window for receiver of 0.4 UIINST when D-PHY is supporting maximum data rate > 1Gbps.*

7. Applicable when operating at HS bit rates ≤ 1 Gbps (UI ≥ 1 ns).

8. Applicable when operating at HS bit rates > 1 Gbps (UI < 1 ns).

9. Applicable for all HS bit rates. However, to avoid excessive radiation, bit rates ≤ 1 Gbps (UI ≥ 1 ns), should not use values below 150 ps.

10. For MIPI speed limitation:

[1] Per lane bandwidth is 1Gbps,

[2] Total Bit Rate: 4Gbps for 8-8-8; 3Gbps for 6-6-6; and 2.67Gbps for5-6-5.

NOVATEK CONFIDENTIAL
NO DISCLOSURE

LP Transmission AC Specification

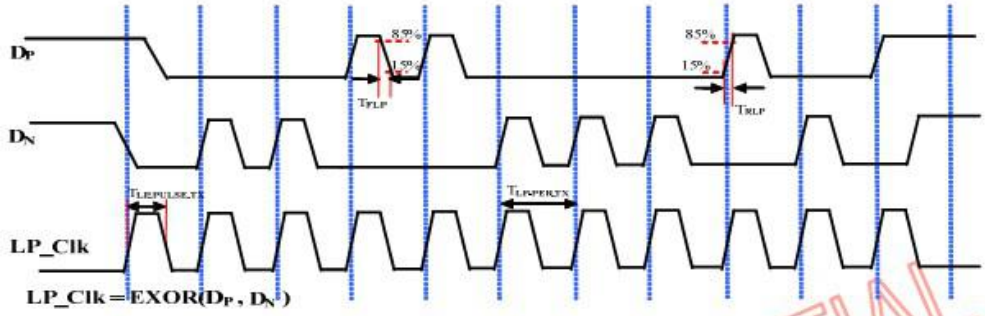

Parameter		Symbol	Min	Typ	Max	Units	Notes
15%-85% rise time and fall time		T_{RLP} / T_{FLP}			25	ns	1
30%-85% rise time and fall time		T_{REOT}			35	ns	1,5,6
Pulse width of the LP exclusive-OR clock	First LP exclusive-OR clock pulse after STOP state or last pulse before stop state	$T_{LP-PULSE-TX}$	40			ns	4
	All other pulses		20			ns	4
Period of the LP exclusive-OR clock		$T_{LP-PER-TX}$	90			ns	
Slew Rate@ C_{LOAD} = 0pF		$\delta V/\delta t_{SR}$	30		500	mV/ns	1,2,3,7
Slew Rate@ C_{LOAD} = 5pF			30		200	mV/ns	1,2,3,7
Slew Rate@ C_{LOAD} = 20pF			30		150	mV/ns	1,2,3,7
Slew Rate@ C_{LOAD} = 70pF			30		100	mV/ns	1,2,3,7
Load Capacitance		C_{LOAD}			70	pF	1

NOVATEK CONFIDENTIAL
NO DISCLOSURE

Note:

1. *CLOAD includes the low-frequency equivalent transmission line capacitance. The capacitance of TX and RX are assumed to always be <10pF. The distributed line capacitance can be up to 50pF for a transmission line with 2ns delay.*
2. *When the output voltage is between 15% and below 85% of the fully settled LP signal levels.*
3. *Measured as average across any 50 mV segment of the output signal transition.*
4. *This parameter value can be lower then TLPX due to differences in rise vs. fall signal slopes and trip levels and mismatches between Dp and Dn LP transmitters. Any LP exclusive-OR pulse observed during HS EoT (transition from HS level to LP-11) is glitch behavior.*
5. *The rise-time of TREOT starts from the HS common-level at the moment the differential amplitude drops below 70mV, due to stopping the differential drive.*
6. *With an additional load capacitance CCM between 0-60pF on the termination center tap at RX side of the Lane.*
7. *This value represents a corner point in a piecewise linear curve as bellowed.*

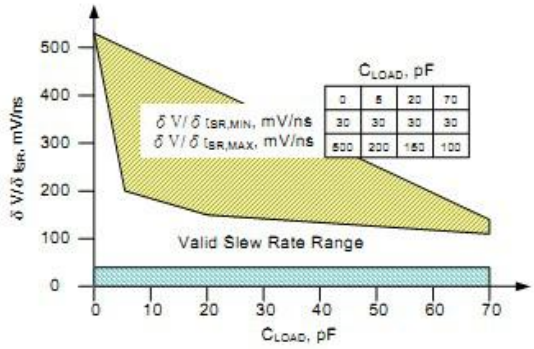

High-Speed Data Transmission in Bursts

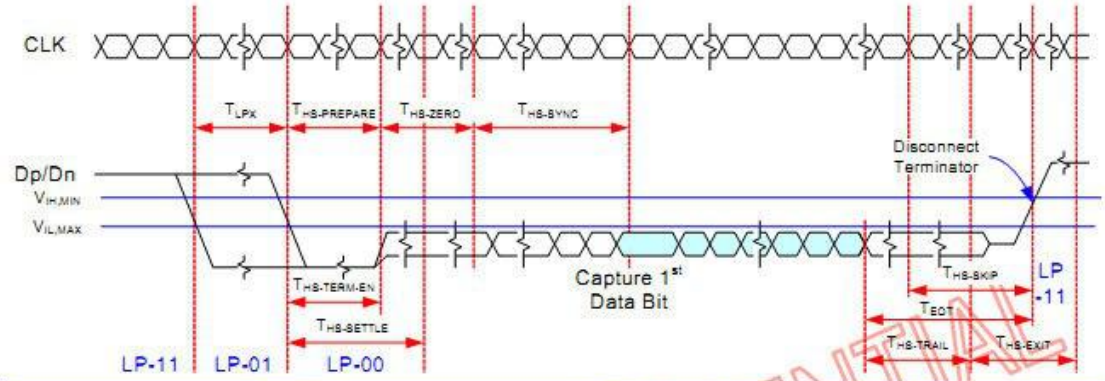

Parameter	Symbol	Min	Typ	Max	Units
Time to drive LP-00 to prepare for HS transmission	$T_{HS-PREPARE}$	40+4UI		85+6UI	ns
Time from start of tHS-TRAIL or tCLK-TRAIL period to start of LP-11 state	T_{EOT}			105+12UI	ns
Time to enable Data Lane receiver line termination measured from when Dn cross VIL,MAX	$T_{HS-TERM-EN}$			35+4UI	ns
Time to drive flipped differential state after last payload data bit of a HS transmission burst	$T_{HS-TRAIL}$	60+4UI			ns
Time-out at RX to ignore transition period of EoT	$T_{HS-SKIP}$	40		55+4UI	ns
Time to drive LP-11 after HS burst	$T_{HS-EXIT}$	100			ns
Length of any Low-Power state period	T_{LPX}	50			ns
Sync sequence period	$T_{HS-SYNC}$		8UI		ns
Minimum lead HS-0 drive period before the Sync sequence	$T_{HS-ZERO}$	105+6UI			ns

Note:
1: The minimum value depends on the bit rate. Implementations should ensure proper operation for all the supported bit rates.
2: UI means Unit Interval, equal to one half HS the clock period on the Clock Lane.
3: TLPX is an internal state machine timing reference. Externally measured values may differ slightly from the specified values due to asymmetrical rise and fall times.

NOVATEK CONFIDENTIAL
No DISCLOSURE

Turnaround Procedure

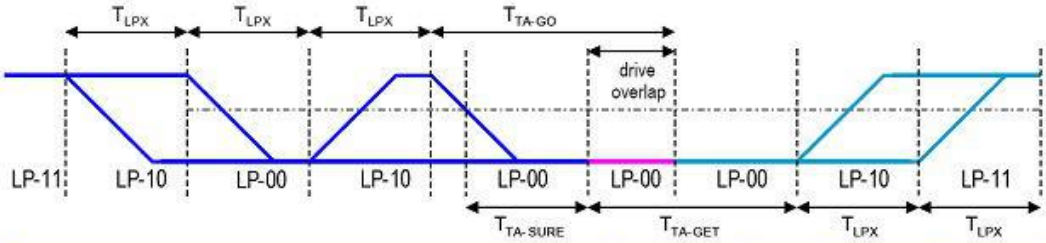

Parameter	Symbol	Min	Typ	Max	Units
Length of any Low-Power state period : Master side	T_{LPX}	50		75	ns
Length of any Low-Power state period : Slave side	T_{LPX}	50		75	ns
Ratio of TLPX(MASTER)/TLPX(SLAVE) between Master and Slave side	Ratio T_{LPX}	2/3		3/2	
Time-out before new TX side start driving	$T_{TA-SURE}$	T_{LPX}		$2T_{LPX}$	ns
Time to drive LP-00 by new TX	T_{TA-GET}		$5T_{LPX}$		ns
Time to drive LP-00 after Turnaround Request	T_{TA-GO}		$4T_{LPX}$		ns

8.Power Supply Configuration

19.4.1. Power Structure

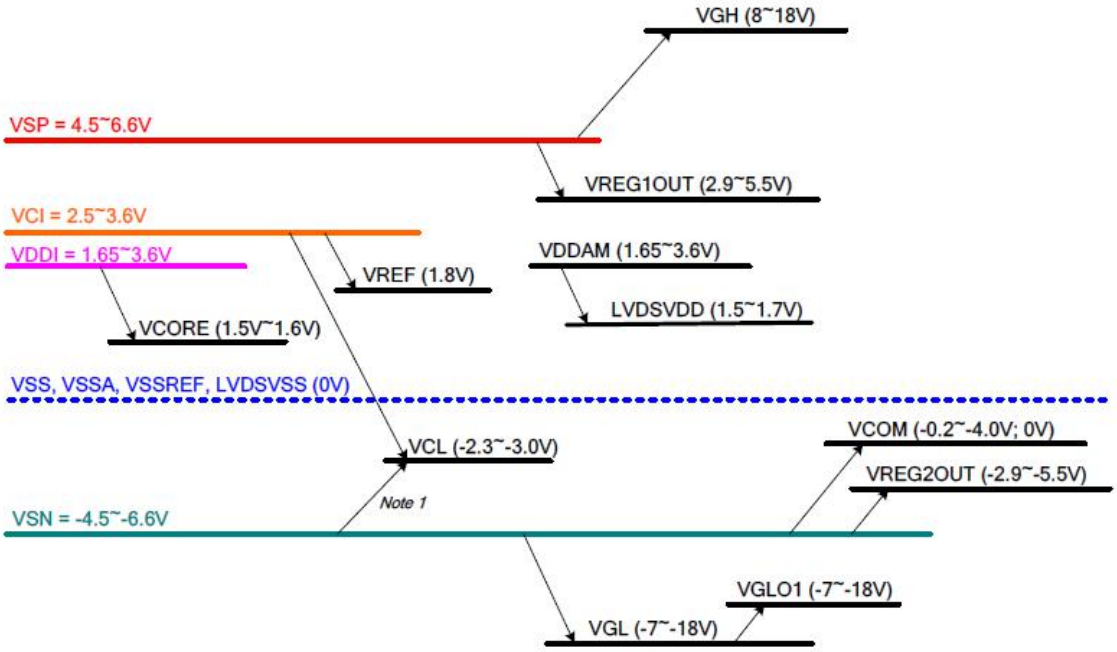

Figure 130: Power Structure of Power Mode 4

9.Optical Specification

Item	Symbol	Condition	Specification			Unit	Remark
			Min.	Typ.	Max.		
Response Time (By Quick)	Tr+Tf	θ= 0°	-	35	45	ms	Note 5
Contrast Ratio	CR	θ= 0°	700	1000	-		Note 2,6
Viewing Angle	Top	CR≧10	75	80	-	deg.	Note 2,5,7
	Bottom	CR≧10	75	80	-		
	Left	CR≧10	75	80	-		
	Right	CR≧10	75	80	-		
Color Chromaticity	Wx	θ= 0°	-0.03	0.299	+0.03		Note3
	Wy			0.316			
NTSC		θ= 0°	60	70			Note3
Transmittance	Trans		3.6	4.2	-	%	Note 4, 9

Note 3: Definition of response time:

The output signals of photo detector are measured when the input signals are changed from "black" to "white" (rising time) and from "white" to "black" (falling time), respectively.

The response time is defined as the time interval between the 10% and 90% of amplitudes. Refer to figure as below.

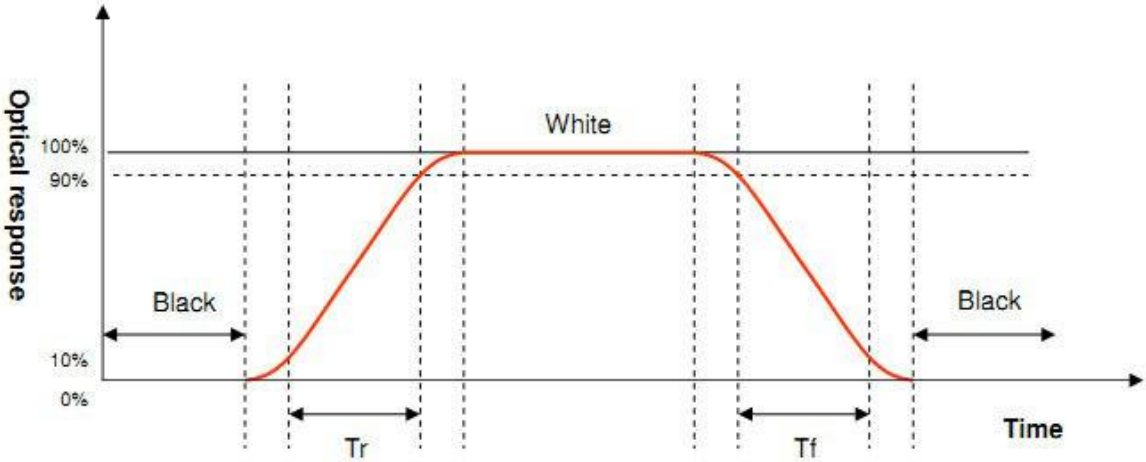

Note 4.Definition of contrast ratio:

Contrast ratio is calculated with the following formula.

$$\text{Contrast ratio (CR)} = \frac{\text{Photo detector output when LCD is at " White" status}}{\text{Photo detector output when LCD is at "Black" status}}$$

Note 5. Definition of viewing angle, θ, Refer to figure as below.

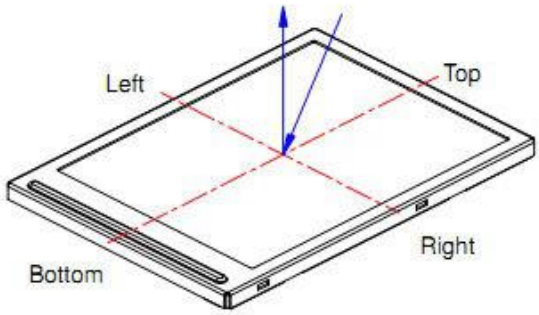

Note 6: Measured at the center area of the panel when all the input terminals of LCD panel are electrically opened.

(a) Reliability Test Items

Item	Test Condition		Criterion
High Temperature Storage	60 , 48 hrs		There should be no change which might affect the practical display function when the display quality test is conducted under normal operating condition.
Low Temperature Storage	-20 , 48 hrs		
High Temp. & High Humidity Storage	30 , 700 RH, 48 hrs		
Vibration Test (Non-operating)	Freq.:10~55~10 Hz, Amp.:1.5mm 1 hr for each direction of X, Y, Z		
Electrostatic Discharge Test (Non-	Terminal	150 pF, 0 Ω, ±300 V, Contact	
	Panel	150 pF, 330 Ω, ±8 KV, Air	
Thermal Shock (Static)	-20, 30 min /70, 30 min, 20 cycles		
High Temperature Operation	60 , 48 hrs		
Low temperature Operation	-20 , 48 hrs		
High Temperature & High Humidity (Operating)	20 , 70 RH, 48 hrs		
FPC Peeling Strength Test	Pull speed: 50 mm/min, +90°,		> 400gf/cm

(b) **Package**

1 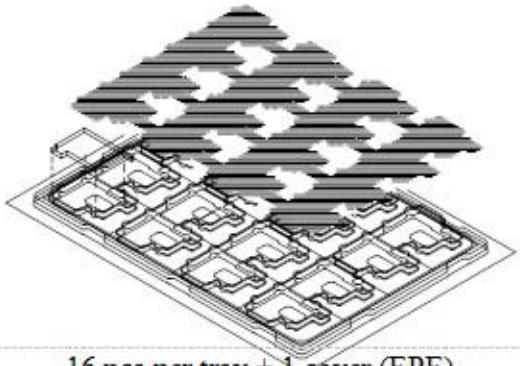 16 pcs per tray + 1 cover (EPE)	4 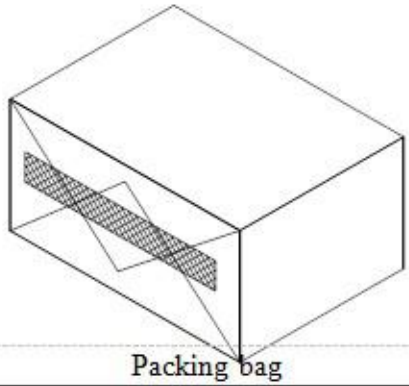 Packing bag
2 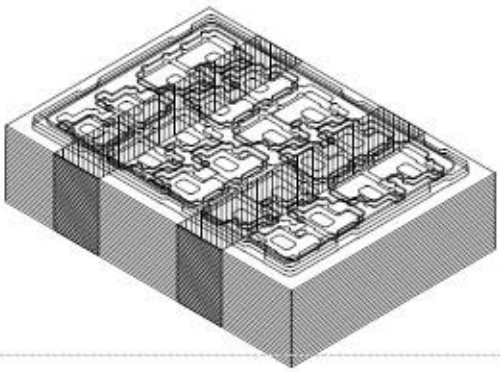 25 trays + 1 dummy tray = 400 ps	5 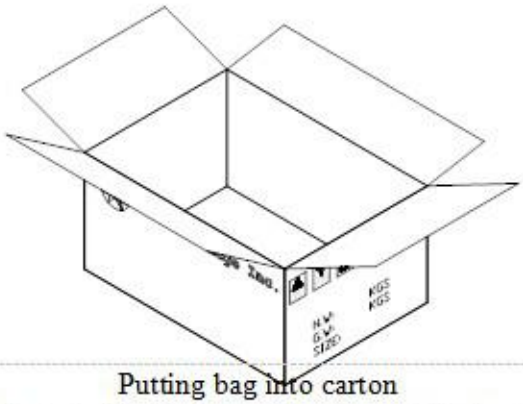 Putting bag into carton Protected by 6 pieces of cushion EPE sheet
3 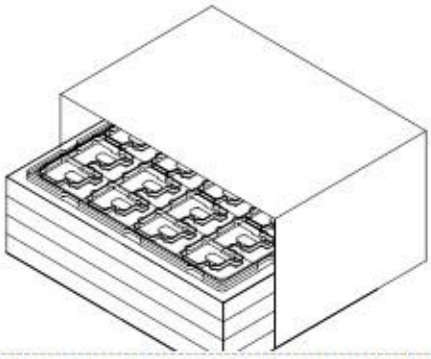 Putting trays into anti-electrostatic bag	6 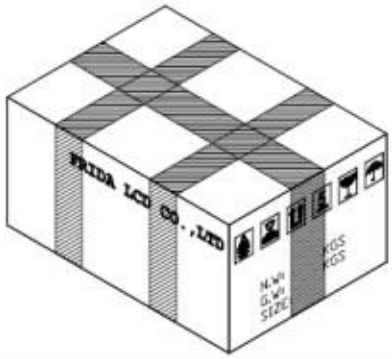

12.Precautions

Please pay attentions to the followings as using the LCD module.

Handling

(a) Do not apply strong mechanical stress like drop, shock or any force to LCD module. It may cause improper operation, even damage.

(b) Because the polarizer is very fragile and easy to be damaged, do not hit, press or rub the display surface with hard materials.

(c) Do not put heavy or hard material on the display surface, and do not stack LCD modules.

(d) If the display surface is dirty, please wipe the surface softly with cotton swab or clean cloth.

(e) Avoid using Ketone type materials (e.g. Acetone), Toluene, Ethyl acid or Methyl chloride to clean the display surface. It might damage the touch panel surface permanently. The recommended solvents are water and Isopropyl alcohol.

(f) Wipe off water droplets or oil immediately.

(g) Protect the LCD module from ESD. It will damage the LSI and the electronic circuit.

(h) Do not touch the output pins directly with bare hands.

(i) Do not disassemble the LCD module.

(j) Do not lift the FPC of Touch Panel.

Storage

(a) Do not leave the LCD modules in high temperature, especially in high humidity for a long time.

(b) Do not expose the LCD modules to sunlight directly.

(c) The liquid crystal is deteriorated by ultraviolet. Do not leave it in strong ultraviolet ray for a long time.

(d) Avoid condensation of water. It may cause improper operation.

(e) Please stack only up to the number stated on carton box for storage and transportation. Excessive weight will cause deformation and damage of carton box.

Operation

10. When mounting or dismounting the LCD modules, turn the power off.

11. Protect the LCD modules from electric shock.

12. The Driver IC control algorithms stated above should always obeyed to avoid damaging the LSI and electronic circuit.

13. Be careful to avoid mixing up the polarity of power supply for backlight.

14. Absolute maximum rating specified above has to be always kept in any case. Exceeding it may cause non-recoverable damage of electronic components or, nevertheless, burning.

15. When a static image is displayed for a long time, remnant image is likely to occur.

16. Be sure to avoid bending the FPC to an acute shape, it might break FPC.

17. Most of the touch screens have air vent to equalize the inside air pressure to the outside one. The air vent must be open and liquid contact must be avoided as the liquid may be absorbed if the liquid is accumulated near the air vent.

18. For the fragility of ITO film, it should avoid to use too tapering pen as the input material.

Touch Panel Mounting Notes

5. If a cushion is used between bezel/housing and film must be choose as free as enough to absorb the expansion and contraction to avoid the distortion of film.

6. The cushion must be placed out of the Viewing Area.

7. Bezel/Housing edge must be posited between Key Area and Viewing Area. The edge enters the Key Area may cause unexpected input if the gap is too narrow or foreign particles like dusts exist between Bezel/Housing and ITO film.

8. Mounting example:

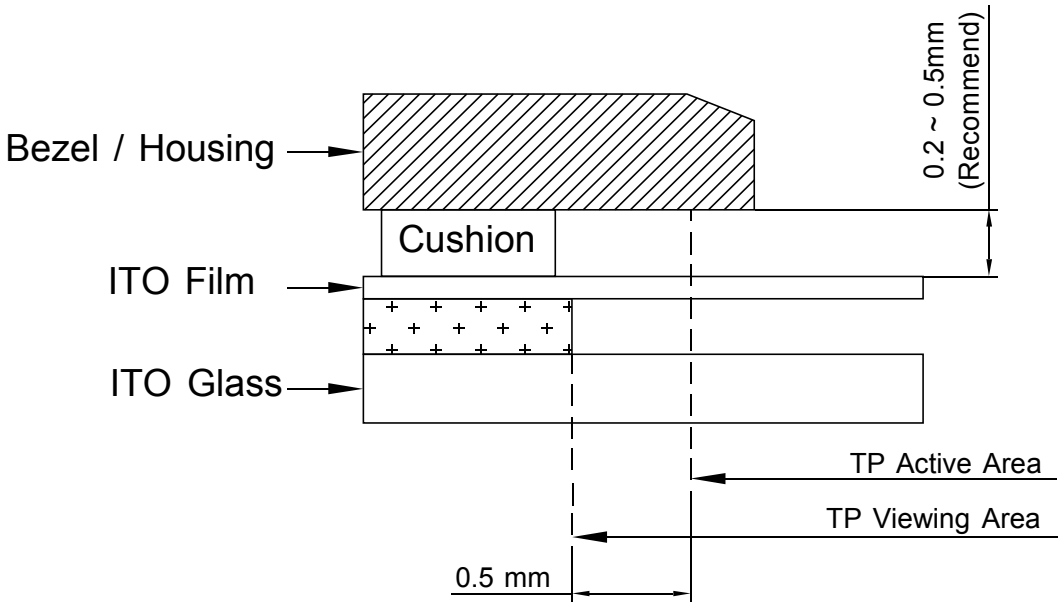

The corner part has conductivity. Do not touch any metal part after mounting.

Others

2. If the liquid crystal leaks from the panel, it should be kept away from the eyes or mouth.

3. For the fragility of polarizer, it is recommended to attach a transparent protective plate over the display surface.

4. It is recommended to peel off the protection film on the polarizer slowly so that the electrostatic charge can be minimized.

13. Inspection standard

TBD