REAL -TIME CLOCK IC－SD3031(v1.2)

1.General Description

The SD3031 is a CMOS type real-time clock with a built-in crystal and an integrated temperature-compensated crystal oscillator (TCXO),which is connected to the CPU via 2-wires and capable of serial transmission of clock and calendar data to the CPU.

The SD3031 has dual power supply system. When the primary power supply goes down to an assigned value or resumes from low power, the system can switch between the primary power supply and battery automatically.

The SD3031 can generates various periodic interrupt clock pulses lasting for long period, and three alarm interrupts can be made by year,month,date,days of the week, hours, and minutes.,seconds. It also provides a selectable 4096Hz~1/16Hz clock output for an external MCU. The product incorporates a time trimming circuit that adjusts the clock with higher precision by adjusting any errors in crystal oscillator frequencies . A 70-bytes general SRAM is implemented in the SD3031.

2.Features：

- Operation voltage range:2.7V~5.5V.
- Low power consumption: typical 0.8uA at 3.0V.
- Fast (400kHz) I^2C Interface.
- High frequency accuracy:±3.8ppm at 25℃.
- High precision temperature compensated circuit.
- Real-Time Clock Counts Seconds, Minutes,Hours, Day, Date, Month, and Year with Leap Year Compensation Valid Up to 2100.
- Time-of-Year,Month,Day,Week,Hour,Minute,Second Alarms.
- Programmable Square-Wave Output:4096hz...1hz..1/16hz.
- 24-bit countdown timer, optional 4 clock sources (4096HZ, 64HZ, 1HZ, 1min)
- 12-houe/24-hour time display selectable.
- 70 bytes general SRAM implemented for system data backup.
- 8 Bytes ID code
- CMOS logic
- ROHS Recognized.
- Package: SOP8(208mil)

3.Pin Configuration

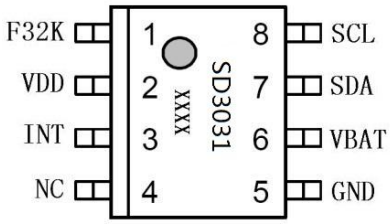

NAME	FUNCTION
SCL	Serial Clock Input. This pin is the clock input for the I^2C serial interface and is used to synchronize data movement on the serial interface. Up to 5.5V can be used for this pin, regardless of the voltage on VCC.
SDA	Serial Data Input/Output. This pin is the data input/output for the I^2C serial interface. This open-drain pin requires an external pullup resistor. The pullup voltage can be up to 5.5V, regardless of the voltage on VCC.
INT	Active-Low Interrupt or Square-Wave Output. This open-drain pin requires an external pullup resistor connected to a supply at 5.5V or less. If not used, this pin can be left floating.
F32K	32khz open-drain out pin with output enable control . If not used, this pin can be left floating.
VBAT	External Battery input pin.
VCC	DC Power Pin for Primary Power Supply. This pin should be decoupled using a 0.1μF to 1.0μF capacitor.
NC	No Conncected
GND	Ground

4.Registers

4.1 Table of the RTC registers

Add.	Register bank	Register name	BIT								Value (DEC)	Default (BIN)
			D7	D6	D5	D4	D3	D2	D1	D0		
00H	Real time clock registres	Second	0	S40	S20	S10	S8	S4	S2	S1	0-59	XXXX-XXXX
01H		Minute	0	MN40	MN20	MN10	MN8	MN4	MN2	MN1	0-59	XXXX-XXXX
02H		Hour	12_/24	0	H20 P/A_	H10	H8	H4	H2	H1	0-23	XXXX-XXXX
03H		Week	0	0	0	0	0	W4	W2	W1	0-6	XXXX-XXXX
04H		Day	0	0	D20	D10	D8	D4	D2	D1	1-31	XXXX-XXXX
05H		Month	0	0	0	MO10	MO8	MO4	MO2	MO1	1-12	XXXX-XXXX
06H		Year	Y80	Y40	Y20	Y10	Y8	Y4	Y2	Y1	0-99	XXXX-XXXX
07H	Time alarm registres	Second alarm	0	AS40	AS20	AS10	AS8	AS4	AS2	AS1	0-59	0000-0000
08H		Minute alarm	0	AMN40	AMN20	AMN10	AMN8	AMN4	AMN2	AMN1	0-59	0000-0000
09H		Hour alarm	0	0	AH20 AP/A_	AH10	AH8	AH4	AH2	AH1	0-23	0000-0000
0AH		Week alarm	0	AW6	AW5	AW4	AW3	AW2	AW1	AW0	N/A	0000-0000
0BH		Day alarm	0	0	AD20	AD10	AD8	AD4	AD2	AD1	1-31	0000-0000
0CH		Mouth alarm	0	0	0	AMO10	AMO8	AMO4	AMO2	AMO1	1-12	0000-0000
0DH		Year alarm	AY7	AY6	AY5	AY4	AY3	AY2	AY1	AY0	0-99	0000-0000
0EH		Alarm enable	0	EAY	EAMO	EAD	EAW	EAH	EAMN	EAS	N/A	0000-0000
0FH	Control registers	CTR1	WRTC3	OSF	INTAF	INTDF	BLF	WRTC2	PMF	RTCF	N/A	0000-0000
10H		CTR2	WRTC1	IM	INTS1	INTS0	FOBAT	INTDE	INTAE	INTFE	N/A	0000-0000
11H		CTR3	ARST	F32K	TDS1	TDS0	FS3	FS2	FS1	FS0	N/A	0000-0000
12H		TTF	1ppm/3ppm	F6	F5	F4	F3	F2	F1	F0	N/A	0000-0000
13H		Count down timer	TD7	TD6	TD5	TD4	TD3	TD2	TD1	TD0	0-255	0000-0000
14H			TD15	TD14	TD13	TD12	TD11	TD10	TD9	TD8	0-255	0000-0000
15H			TD23	TD22	TD21	TD20	TD19	TD18	TD17	TD16	0-255	0000-0000
16H	No used	-	-	-	-	-	-	-	-	-	0-255	XXXX-XXXX
17H	IIC control register	AGTC	BATIIC	0	BSY	CONT	-	-	-	-	0-255	0000-0000
18H	Charge register	CHARGE	ENCH	-	-	-	-	-	Charge 1	Charge 2	0-255	0000-0000
19H	Extend control registers	CTR4	INTS_E2	INTS_E1	INTS_E0	CONT_BAT	INTTHE	INTTLE	INTBHE	INTBLE	0-255	0000_0000
1AH		CTR5	BAT8_VAL	SYS	OSC_RDY				BHF	BLF	0-255	0000_0000
1BH	Battery voltage	BAT_VAL	BAT7_VAL	BAT6_VAL	BAT5_VAL	BAT4_VAL	BAT3_VAL	BAT2_VAL	BAT1_VAL	BAT0_VAL	0-255	0000_0000

1CH~ 2BH	No used	-	-	-	-	-	-	-	-	-	N/A	XXXX-XXXX
2CH~ 71H	User RAM	(70bytes)	BIT7	BIT6	BIT5	BIT4	BIT3	BIT2	BIT1	BIT0		XXXX-XXXX
72H~ 79H	ID(read only)	(8Bytes)	BIT7	BIT6	BIT5	BIT4	BIT3	BIT2	BIT1	BIT0	N/A	XXXX-XXXX

4.2 Real Time Clock Registers [00h to 06h]

These RTC (Real time clock)registers are stored as binary-coded decimal (BCD) format.

Seconds and Minutes: range from 0 to 59;

Hour :can be set 12-hour or 24-hour mode;

day :from 1 to 31,Month :from1 to 12, Year :from 0 to 99,;

Day of the Week:from 0 to 6.

24 HOUR TIME

If 12_/24 bit of the Hour register is “1”, the RTC uses a 24-hour format. If the 12_/24 bit is “0”, the RTC uses a 12-hour format

Note:

1. You must clear the hour's highest bit 12_/24 after you have gotten the data from the hour register, otherwise it will be incorrect when the time is P.M.
2. After power on reset, the real time clock data registers aren't cleaned or set to be "1".
3. When writing the real time data into RTC registers(00H ~ 06H), you must write all of the total seven bytes data one time .

4.3 Interrupt Control Register [07h to 13h]

The SD3031 have three different interrupts and are controlled by these bits of the INTAE, INTFE, INTDE :

No.	Interrupt enable bit (1=enable,0=disable)	Interrupt name	Interrupt flag (1=Yes,0=No)
1	INTAE	Alarm Interrupt	INTAF
2	INTFE	Frequency Interrupt	-
3	INTDE	Countdown timer interrupt	INTDF

When the alarm interrupt is generated, the interrupt flag INTAF bit is set to 1; when the countdown interrupt is generated, interrupt flag INTDF bit is set to 1; if the flag bits is set to 1, it need to clear by progarm. Frequency interrupt hasn't any flag.

The three interrupts used one output pin INT.The INT output is selected via INTS0、INTS1 which are the control register bits of the control register(CTR2).

No.	INTS1	INTS0	Function
0	0	0	Disable output
1	0	1	Alarm Interrupt
2	1	0	Frequency Interrupt
3	1	1	Countdown timer interrupt

(1) Alarm Interrupt

The alarm interrupt is enabled via the INTAE bit, and the alarm time data include second,minute,hour, day, week, month and year are stored in time alarm registers(07h~0Dh).

Note:the highest bit of hour alarm register(09h) must be clear to logic "0" all the time.

Real time alarm enable register is 0EH:

BIT	D7	D6	D5	D4	D3	D2	D1	D0
Bit name	0	EAY	EAMO	EAD	EAW	EAH	EAMN	EAS
Alarm enable	-	Year (0Dh)	Month (0Ch)	Day (0Bh)	Week (0Ah)	Hour (09h)	Minute (08h)	Second (07h)

Note:1=enable ,0=disable.

When one or more of the alarm registers are loaded with a valid second,minute, hour, day ,week,month,year and its corresponding alarm enable bit is a logic 1, then that information will be compared with the current second,minute, hour, day ,week,month,year, When all enabled comparisons first match, the bit INTAF (Alarm flag) is set.

Note:

1. When the week alarm and the date alarm are both enable at the same time, only the date alarm is valid and the week alarm is invalid.
2. Week alarm register data's format is different from real-time clock week data format. The bit of Week alarm register AW6.AW5.AW4.AW3.AW2.AW1.AW0 is respectively indicated Saturday, Friday, Thursday, Wednesday, Tuesday, Monday, Sunday. For example, AW6, AW1 = 1, and other bits are clear to 0, alarm interrupt will be output from INT pin on Monday and Saturday.

The INTAF bit will automatically be cleared when the alarm enable register is written . The alarm interrupt output function is selected by setting the INTS1 bit to “0”,theINTS0 bit to “1”,

The alarm function can be set in either single event alarm mode or periodic interrupt alarm mode (seclcted by IM bit).

IM	Alarm interrupt mode	INT
0	single event alarm	Remain low until the INTAF bit is reset
1	periodic interrupt alarm	Periodic pulse until the INTAF bit is reset

(2) Frequency interrupt

The frequency interrupt is enabled by setting the INTFE bit to “1” .The signal frequency can be selected by the FS3, FS2, FS1, FS0 bits in the register CTR3:

frequency(HZ)	FS3	FS2	FS1	FS0
0	0	0	0	0
4096	0	0	1	0
1024	0	0	1	1
64	0	1	0	0
32	0	1	0	1
16	0	1	1	0
8	0	1	1	1
4	1	0	0	0
2	1	0	0	1
1	1	0	1	0
1/2	1	0	1	1
1/4	1	1	0	0
1/8	1	1	0	1
1/16	1	1	1	0
1S	1	1	1	1

(3)Countdown timer interrupt

The countdown timer interrupt is enabled and disabled via the timer control register bit INTDE.The frequency source is selected by the TDS1, TDS0 bits in the control register 3(CTR3).

TDS1	TDS0	Source clock(HZ)
0	0	4096
0	1	64
1	0	1
1	1	1minute

When countdown timer interrupt is enabled and an 24-bit binary countdown data is written into the countdown timer, the countdown timer will reduce according to the source clock. If the countdown timer reduce to zero,The countdown interrupt flag will be set (control register 1 bit INTDF) to “1” immediately . The longest period of the countdown timer interrupt is 31 years.

4.4 Battery Control Register

IIC control register AGTC (17H) :

Name	Bit7	Bit6	Bit5	Bit4	Bit3	Bit2	Bit1	Bit0	Default
AGTC	BATIIC	0	-	0	-	-	-	-	0000_0000

BATIIC: BATIIC=0, IIC communication is prohibited in VBAT mode; BATIIC=1, IIC communication is allowed in VBAT mode. The default value is 0.

Extended Control Register CRT4(19H):

Name	Bit7	Bit6	Bit5	Bit4	Bit3	Bit2	Bit1	Bit0	Default
CTR4	INTS_E2	INTS_E1	INTS_E0	CONT_BAT	INTTHE	INTTLE	INTBHE	INTBLE	0000_0000

CONT_BAT: The mandatory measurement bit for battery voltage (the default value is 0).

1) When CONT_BAT is SET to 0, the battery voltage automatic measurement period is as follows:

In VDD mode, the measurement period is 60S, starting from 3S per minute.

In VBAT mode, the measurement period is 600S, starting from 3S per minute.

The battery voltage measurements are stored in registers 1AH[7] and VBAT_VAL.

For example: 1AH=80H,1BH(VBAT_VAL)=30H, then the battery voltage=130H=304D= 3.04v.

2) CONT_BAT is set to 1 only when the immediate measurement of battery voltage is required, the chip will measure the battery voltage. When measuring, BSY is 1; after measuring, CONT_BAT and BSY are automatically set to 0.

INTTHE: fixed to 0

INTTLE: fixed to 0

INTBHE: battery high voltage alarm enable bit (alarm voltage value: 3.30v, accuracy ± 0.10v), if INTBHE=1 and the battery voltage is greater than or equal to 3.3v, the BHF is set to 1.

INTBLE: battery low voltage alarm enable bit (alarm voltage value is 2.20v, accuracy ± 0.10v), if INTBLE=1 and the battery voltage is less than or equal to 2.2v, the BLF is set to 1.

Note: The above two kinds of alarm interrupts only support single-cycle alarm interrupts and do not support periodic alarm interrupts.

CTR5(1AH):

Name	Bit7	Bit6	Bit5	Bit4	Bit3	Bit2	Bit1	Bit0	Default
CTR5	BAT8_VAL	-	-	-	-	-	BHF	BLF	0000_0000

BAT8_VAL: The highest bit of battery measurement value.

BHF: Battery high voltage flag bit.

BLF: Battery low voltage flag bit.

BHF and BLF can’t be set or cleared by software; When the INT is selected as BHF, BLF output, The state of the pin INT are the same as BHF and BLF .

Battery voltage low 8-bit register (1BH):

Name	Bit7	Bit6	Bit5	Bit4	Bit3	Bit2	Bit1	Bit0	Default
BAT_VAL	BAT7_VAL	BAT6_VAL	BAT5_VAL	BAT4_VAL	BAT3_VAL	BAT2_VAL	BAT1_VAL	BAT0_VAL	0000_0000

4.5 User Registers

Addresses [2Ch to 71h]

SD3031 provides 70 bytes of general-purpose RAM for the user to store data.

4.6 ID code (72H~79H) : 8 Bytes ID code containing the production date, production order number, production serial number, and so on.

4.7 Other control / status bits

Charge control register (18H) :

Bit7	Bit6	Bit5	Bit4	Bit3	Bit2	Bit1	Bit0
EN_Charge						Charge1	Charge0
0	-	-	-	-	-	1	1

EN_Charge bit : This bit is set to 0, disable charge function; this bit is set to 1, enable charge function; the default value is 0.

Charge1	Charge0	Description(internal charge resistance value)
0	0	10 k
0	1	5 k
1	0	2 k
1	1	infinity

Note: 1. When the charge function is enabled, the Ivdd current will increase 80uA .
2.It is not recommended to turn this function on when using non-rechargeable batteries, otherwise the battery will be damaged.
3.when the MCU is reset,users who use the charge function must set the 18H register for 82h each time

(1) **WRITE RTC ENABLE BIT (**WRTC1 ,WRTC2,WRTC3):
Registers (00H ~ 1FH) RTC write enable bits. When the three bits are set to “1”, RTC is enable to be written.
Write enable: Setting the three bits must follow the sequencing: Set the WRTC1 bit to “1” first, then set the WRTC2 and WRTC3 to “1”.
Write disable: Setting the three bits must follow the sequencing: Set the WRTC2 and WRTC3 bits to “0” first, then set the WRTC1 to “0”.

(2) **AUTO RESET ENABLE BIT** (ARST): Enables/disables the automatic reset of the INTAF and INTDF status bits . When ARST bit is set to “1”, these status bits are reset to “0” after a valid read of the respective status register (with a valid STOP condition). When the ARST is cleared to “0”, the user must reset the INTAF and

INTDF bits.by your program

(3) **FREQUENCY OUTPUT AND INTERRUPT BIT** (FOBAT): This bit is used for enables/disables the INT pin during battery backup mode (i.e. VBAT power source active). When the FOBAT is set to “1” the INT pin is disabled during battery backup mode. This means that both the frequency output and alarm output functions are disabled. When the FOBAT is cleared to “0”, the INT pin is enabled during battery backup mode.

(4) **POWER ON BIT (**RTCF): when the dual power(both Vdd add Vbat) reset,the RTCF bit will be set to “1” . this bit can be read only.

(5) **OSF**: Oscillator Stop Flag, OSF=1, indicating the oscillator either is stopped or was stopped for some period. the default value is 0.

(6) **BLF**: Battery low voltage Flag bit, which is "1" when battery voltage is lower than 2.2v (either VDD mode or VBAT mode).

(7)PMF: Power mode flag bit. When power mode is VDD mode, PMF=0; PMF=1 when power mode is VBAT mode.

(8) F32K:32K output enable bit --32K=0, allowing output; 32K=1, output forbidden; The default value is 0.

5. I2C Serial Interface

The SD3031 supports a bidirectional bus oriented protocol. The protocol defines any device that sends data onto the bus as a transmitter and the receiving device as the receiver. The device controlling the transfer is the master and the device being controlled is the slave. The master always initiates data transfers and provides the clock for both transmit and receive operations. Therefore, the SD3031 operates as a slave device in all applications.

5.1 **Protocol Conventions**

(1) Start condition

The SCL and SDA pins are at the “H” level when no data transmission is made. Changing the SDA from “H” to “L” when the SCL and the SDA are “H” activates the start condition and access is started.

(2) Stop condition

Changing the SDA from “L” to “H” when the SCL is “H” activates stop condition and accessing stopped.

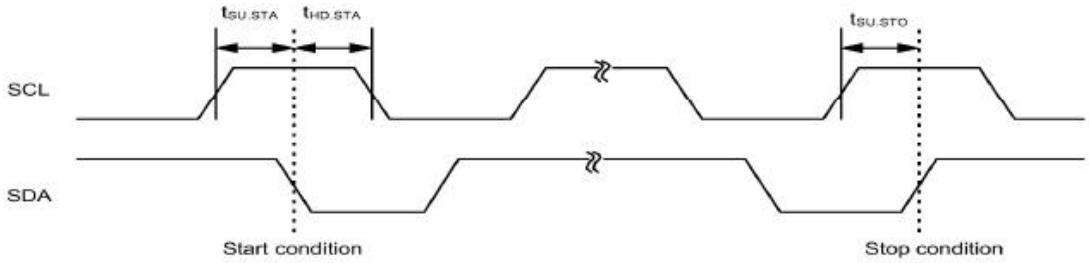

VALID START AND STOP CONDITIONS

(3) Data valid:

The state of the data line represents valid data when, after a START condition, the data line is stable for the duration of the HIGH period of the clock signal. The data on the line must be changed during the LOW period of the clock signal. There is one clock pulse per bit of data.

Each data transfer is initiated with a START condition and terminated with a STOP condition. The number of data bytes transferred between START and STOP conditions is not limited, and is determined by the master device. The information is transferred byte-wise and each receiver acknowledges with a ninth bit.

(4) Acknowledge:

An acknowledge (ACK) is a software convention used to indicate a successful data transfer. The transmitting device, either master or slave, releases the SDA bus after transmitting eight bits. During the ninth clock cycle, the receiver pulls the SDA line LOW to acknowledge the reception of the eight bits of data.

The SD3031 responds with an ACK after recognition of a START condition followed by a valid Identification Byte, and once again after successful receipt of an Address Byte. The SD3031 also responds with an ACK after receiving a Data Byte of a write operation. The master must respond with an ACK after receiving a Data Byte of a read operation.

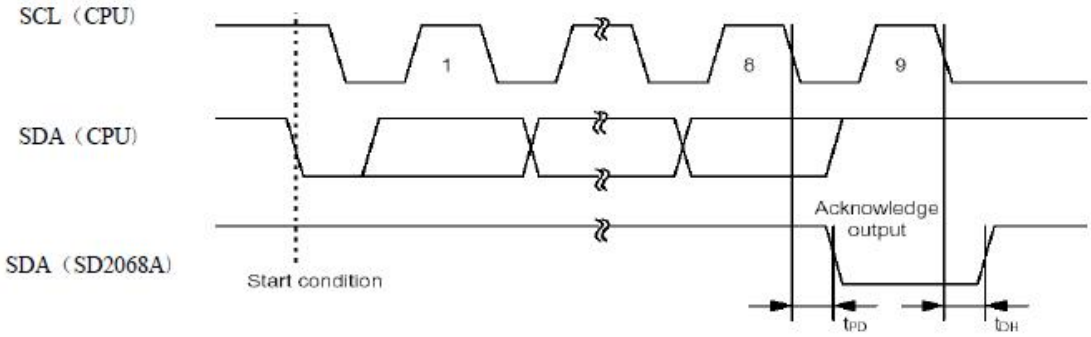

VALID DATA CHANGES, AND ACKNOWLEDGE RESPONSE FROM RECEIVER

5.2 The transmission format of data/command

(1)Device address

The high effective 7 bits (bit7---bit1) in the address byte are defined as device type ID. In SD3031, these 7 bits are 0110010. The lowest bit0 is defined as R/W mode. When this bit is “1”, it is read mode, while “0” is write mode.

The slave address:

BIT7	BIT6	BIT5	BIT4	BIT3	BIT2	BIT1	BIT0
0	1	1	0	0	1	0	R/W

BIT7—BIT1：The slave address of the SD3031 is defined as 0110010

BIT0： R/W definition

“1” is read mode.

“0” is write mode.

(2) Data transmission format

At the end of data transmission/receiving stop condition is generated to complete transmission. However, if start condition is generated without generating stop condition, repeated start condition is met and transmission/receiving data may be continued by setting the slave address again. Use this procedures when the transmission direction needs t be changed during one transmission.

Data is written into the slave from the master

When data is read from the slave immediately after 7bit addressing from the master

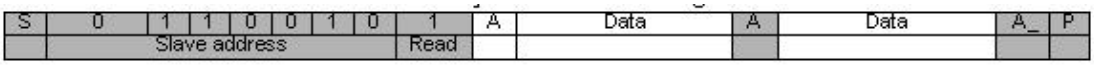

When the transmission direction is to be changed during transmission

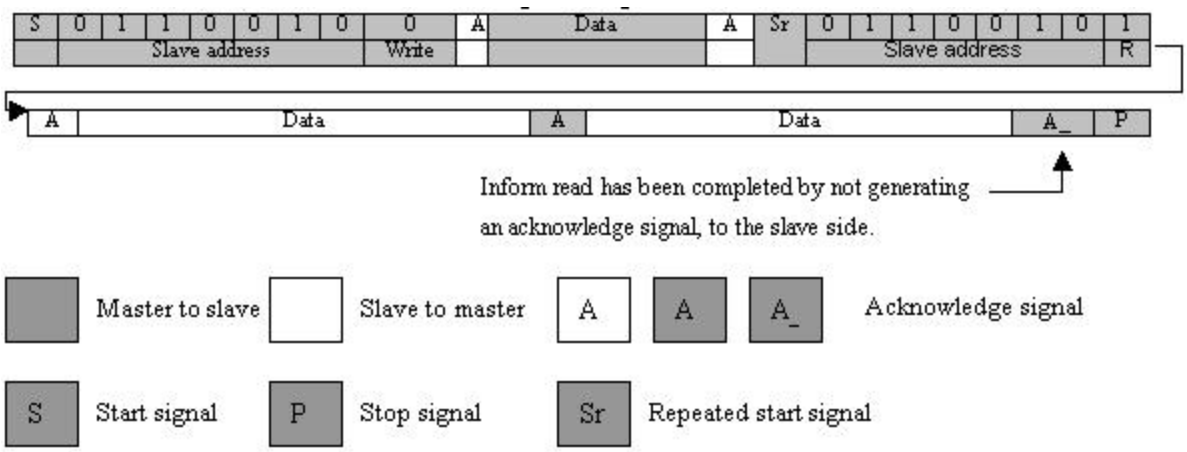

(3)Data Transmission Write Format in the SD3031

1） First send 7 address bit(0110010), the eighth bit is write command “0”. when the ninth bit is ACK signal, SD3031 is under writing condition.

2) In the following byte, the low 5 bits are determined as internal address in SD3031(00H-1FH), the high 3 bits are transmission mode .

3） After writing 1 byte data, there will be 1 bit ACK signal and then writing data in next 1 byte starts. Only when there is a stop signal in the bit after ACK signal, can the writing operation be stopped.

Example of data writing (When writing to internal address 14H to 15H)

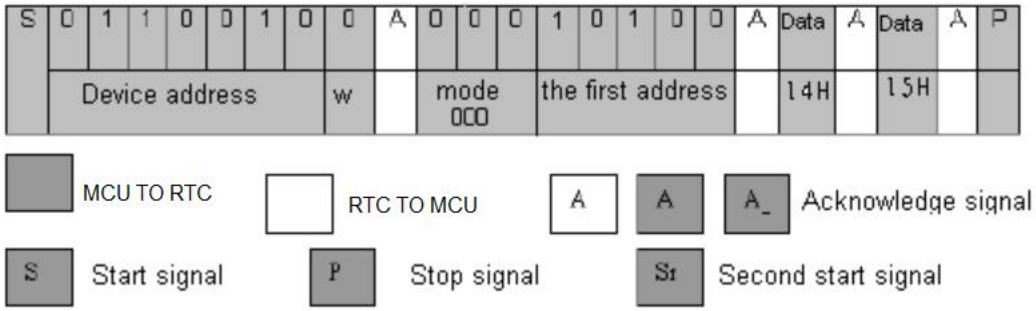

(4)Data Transmission Read Format in the SD3031

The SD3031 allows the following two readout methods of data from an internal register.

Ⅰ) The first method to reading data from the named internal address

1) The first two steps are the same as write mode.after one bit ACK signal, a new start signal will be produced to change the direction of data transmission in INTERFACE connection.
2) Then send 7 address bit(0110010), the eighth bit command is “1”, SD3031 is under data reading condition.
3) After another bit’s ACK signal, it starts reading data normally.
4) When a byte data is read and CPU sends 1 bit ACK signal, a next byte data can be read. Only when the 1 bit ACK signal which is sent by CPU is high voltage, can the reading operation be stopped and then CPU sends stop signal.

Example 1 of data read (when data is read from 7H to 9H)

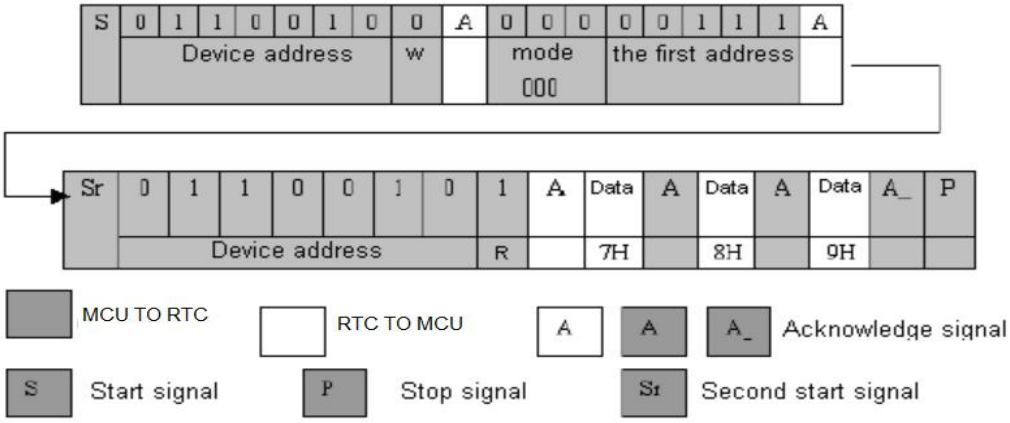

Ⅱ) The second method to reading data from the internal register is to start reading immediately after writing to the slave address(0110010) and the (R/W) bit. Since the internal address pointer is set to 00h by default, this method is only effective when reading is started from the internal address 00h.

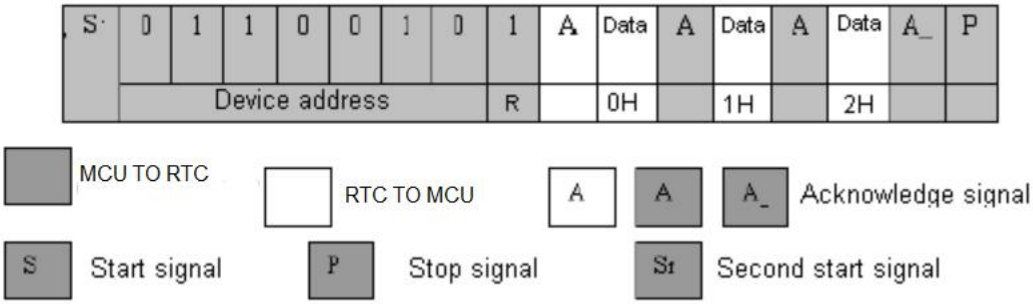

(5)Data Transmission Under Special Condition

The SD3031 hold the clock tentatively for duration from start condition to stop condition to avoid invalid read or write clock on carrying clock. To prevent invalid read or write clock shall be made during one transmission operation. When 0.5 seconds elapses after start condition any access to the SD3031 is automatically released to release tentative hold of the clock and access from the CPU is forced to be terminated (automatic resume function from the interface).

Also a second start condition after the first condition and before the stop condition is regarded as the “repeated start condition”. Therefore, when 0.5 seconds passed after the first start condition, access to the SD3031 is automatically released.

The user shall always be able to access the real-time clock as long as the following two conditions are met.

1）No stop condition shall be generated until clock read/write is started and completed.

2) One cycle read/write operation shall be completed within 0.5 second.

6. Application reference circuit

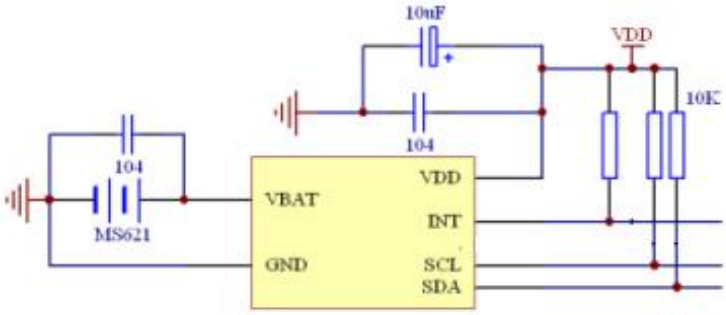

7. Characteristics

Absolute Maximum Ratings

Voltage on VDD,SCL,SDA,and INT pins(Respect to Ground)……...……-0.5V to 7.0V

Storage Temperature……...……..…－65℃to +150℃

Lead Temperature(Soldering,10s)…….....……...……..……260℃/10s

Stresses beyond those listed under "Absolute Maximum Ratings" may cause permanent damage to the device. These are stress ratings only, and functional operation of the device at these or any other conditions beyond those indicated in the operational sections of the specifications is not implied. Exposure to absolute maximum rating conditions for extended periods may affect device reliability.

(1) DC CHARACTERISTICS

SYMBOL	PARAMETER	CONDITIONS	MIN	TYP	MAX	UNITS	NOTES
V_{DD}	Main Power Supply		2.7		5.5	V	
V_{BAT}	Battery Supply Voltage		2.3		3.6	V	
I_{DD1}	Supply Current	V_{DD}=5V		1.2	3.0	μA	
		V_{DD}=3V		1.0	1.5	μA	
I_{DD2}	Supply Current when I IC Active	V_{DD}=5V		40	120	μA	
I_{DD3}	Supply Current when charge enable	V_{DD}=5V		80		μA	
I_{BAT}	Battery Supply Current	V_{BAT}=3V		0.8		μA	
I_{L1}	Input Leakage Current On SCL			100		nA	
I_{LO}	I/O Leakage Current On SDA			100		nA	
V_{BATHYS}	V_{BAT} Hysteresis			300		mV	
INT V_{OL}	Output Low Voltage	V_{DD}=5V I_{OL}=2mA			0.4	V	

(2) AC CHARACTERISTICS

PARAMETER	CONDITIONS	Standard Mode (f_{SCL}=100kHz)			Fast Mode (f_{SCL}l=400kHz)			UNITS
		MIN	TYP	MAX	MIN	TYP	MAX	
f_{SCL} SCL frequency				100			400	kHz
V_{IL} SDA and SCL input buffer LOW voltage		-0.3		0.3×V_{DD}	-0.3		0.3×V_{DD}	V
V_{IH} SDA and SCL input buffer HIGH voltage		0.7×V_{DD}		V_{DD}+0.3	0.7×V_{DD}		V_{DD}+0.3	V
Hyteresis SDA and SCL input buffer hysteresis		0.05×V_{DD}			0.05×V_{DD}			V
V_{OL} SDA output buffer LOW voltage sinking 2mA			0.4			0.4		V
C_{pin} SDA and SCL pin capacitance	T_A=25 ℃ f=1MHZ V_{DD}=5V V_{IN} =0V V_{OUT}=0V			10			10	pF
t_{IN} Pulse width suppression time at SDA and SCL inputs				100			50	ns
t_{AA} SCL falling edge to SDA output data valid	SCL falling edge crossing 30%of V_{DD} until SDA exits the 30%to 70%of V_{DD} window			900			900	ns
t_{BUF} Time the bus must be free before the start of a new transmission	SDA crossing 70%of V_{DD} during a STOP condition, to SDA crossing 70%of V_{DD} during the following START condition	4700			1300			ns
t_{LOW} Clock LOW time	Measured at the 30% of V_{DD} crossing	4700			1300			ns
t_{HIGH} Clock HIGH time	Measured at the 70% of V_{DD} crossing	4000			600			ns
$t_{SU:STA}$ START condition setup time	SCL rising edge to SDA falling edge Both crossing 70% of V_{DD}	4700			600			ns
$t_{HD:STA}$ START condition hold time	From SDA falling edge crossing 30% of V_{DD} to SCL falling edge crossing 70% of V_{DD}	4000			600			ns
$t_{SU:DAT}$ Input data setup time	From SDA exiting the 30% to 70% of V_{DD} window ,to SCL rising edge crossing 30% of V_{DD}	250			100			ns
$t_{HD:DAT}$ Input data hold time	From SCL falling edge crossing 30% of V_{DD} to SDA entering the 30% to 70%of V_{DD} window	0			0			ns
$t_{SU:STO}$ STOP condition setup time	From SCL rising edge crossing 70% of V_{DD} ,to SDA rising edge crossing 30% of V_{DD}	4000			600			ns
t_{DH} Output data hold time	From SCL falling edge crossing 30% of V_{DD} ,until SDA enters the 30% to 70% of V_{DD} window.	0			0			ns
t_R SDA and SCL rise time	From 30% to 70% of V_{DD}			1000			300	ns
t_F SDA and SCL fall time	From 70% to 30% of V_{DD}			300			300	ns

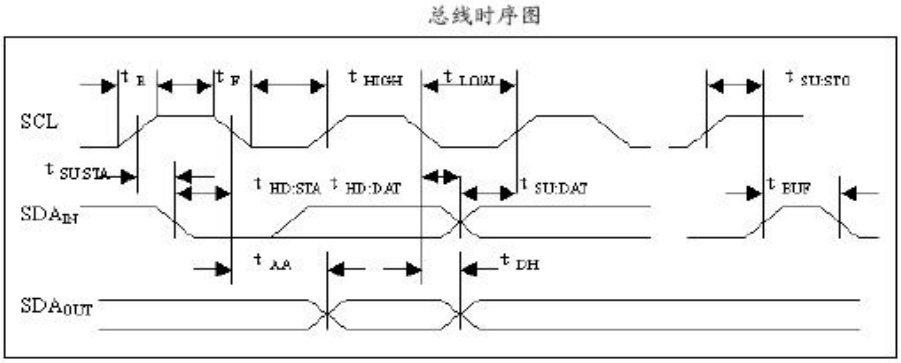

8.Frequency temperature characteristics

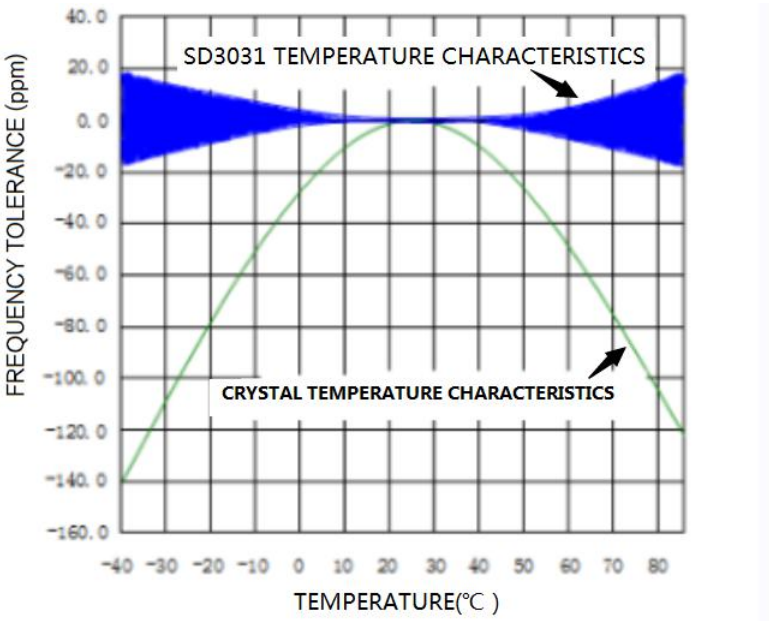

9.Packaging Information(unit:mm)

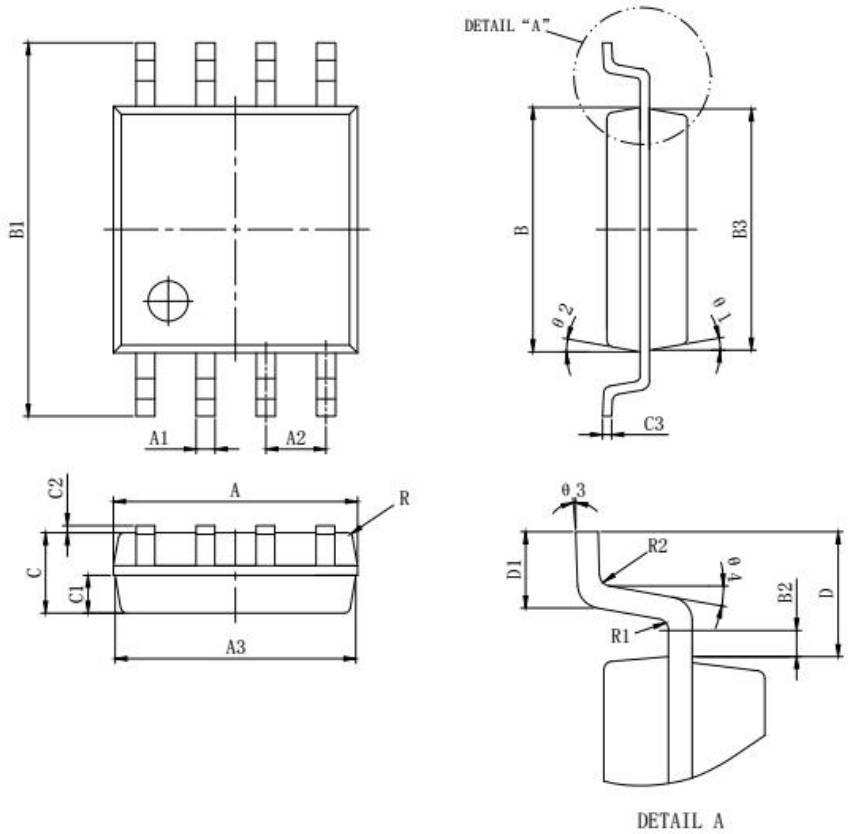

尺寸 / 标注	最小(mm)	最大(mm)	尺寸 / 标注	最小(mm)	最大(mm)
A	5.13	5.33	C3	0.203REF	
A1	0.38	0.48	D	1.31REF	
A2	1.27REF		D1	0.50	0.80
A3	5.12	5.22	R	0.127TYP8	
B	5.18	5.38	R1	0.20REF	
B1	7.70	8.10	R2	0.20REF	
B2	0.35	0.40	θ1	10° TYP4	
B3	5.17	5.27	θ2	10° TYP4	
C	1.70	1.90	θ3	2° ～ 6°	
C1	0.848	0.948	θ4	3° ～ 7°	
C2	0.05	0.15			

SD3031 ,SOP8(208mil) Package

Wave products are sold by description only.Wave ltd. reserves the right to make changes in circuit design ,software and/or specifications at any time without notice.