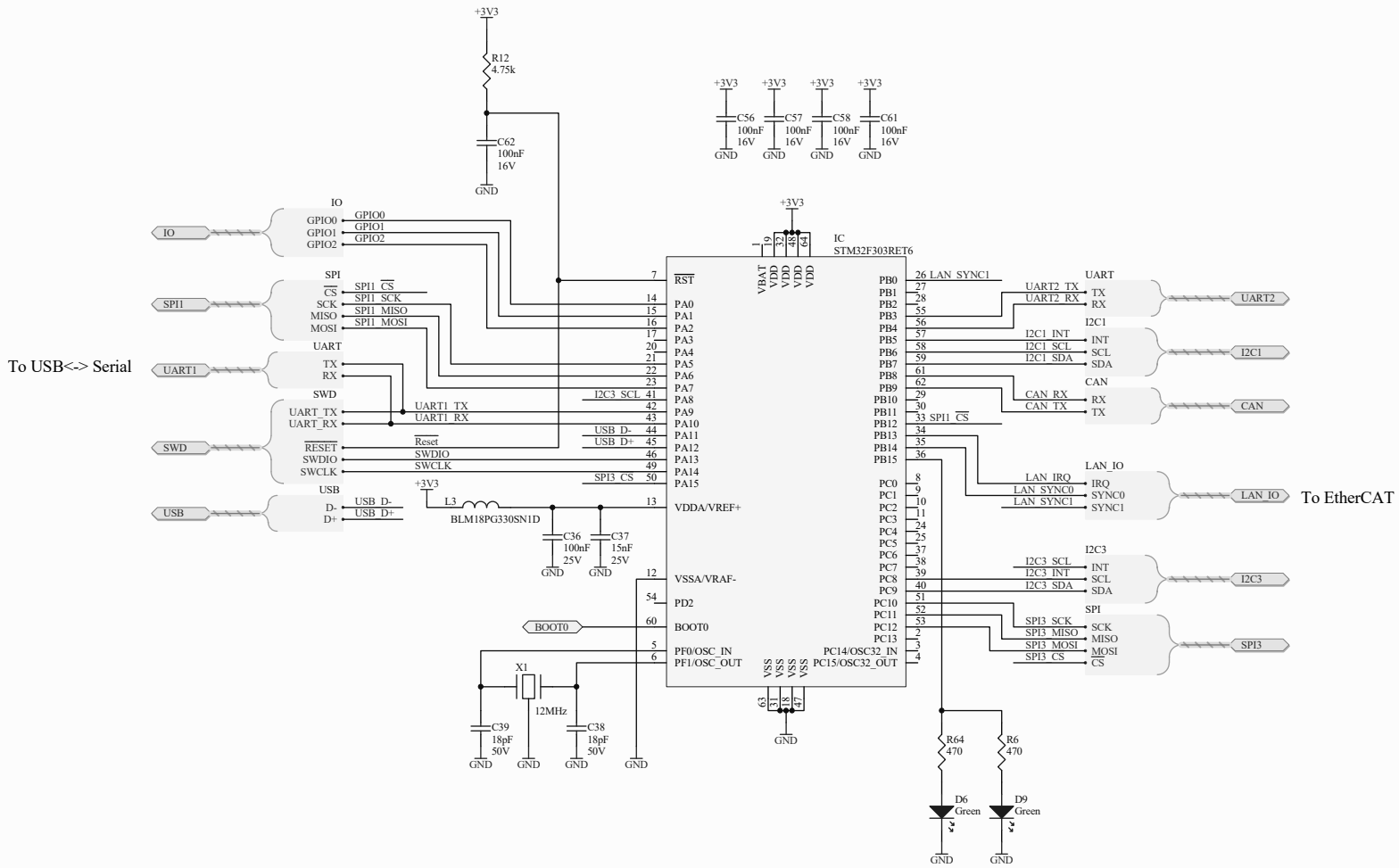

Title *Microcontroller*			
Size: A3	Number: *	Revision: *	
Date: 2018/9/18	Time: 6:29:05	Sheet 5 of 6	
File: D:\github\DieBieSlave\DB10012_ControlController.SchDoc			