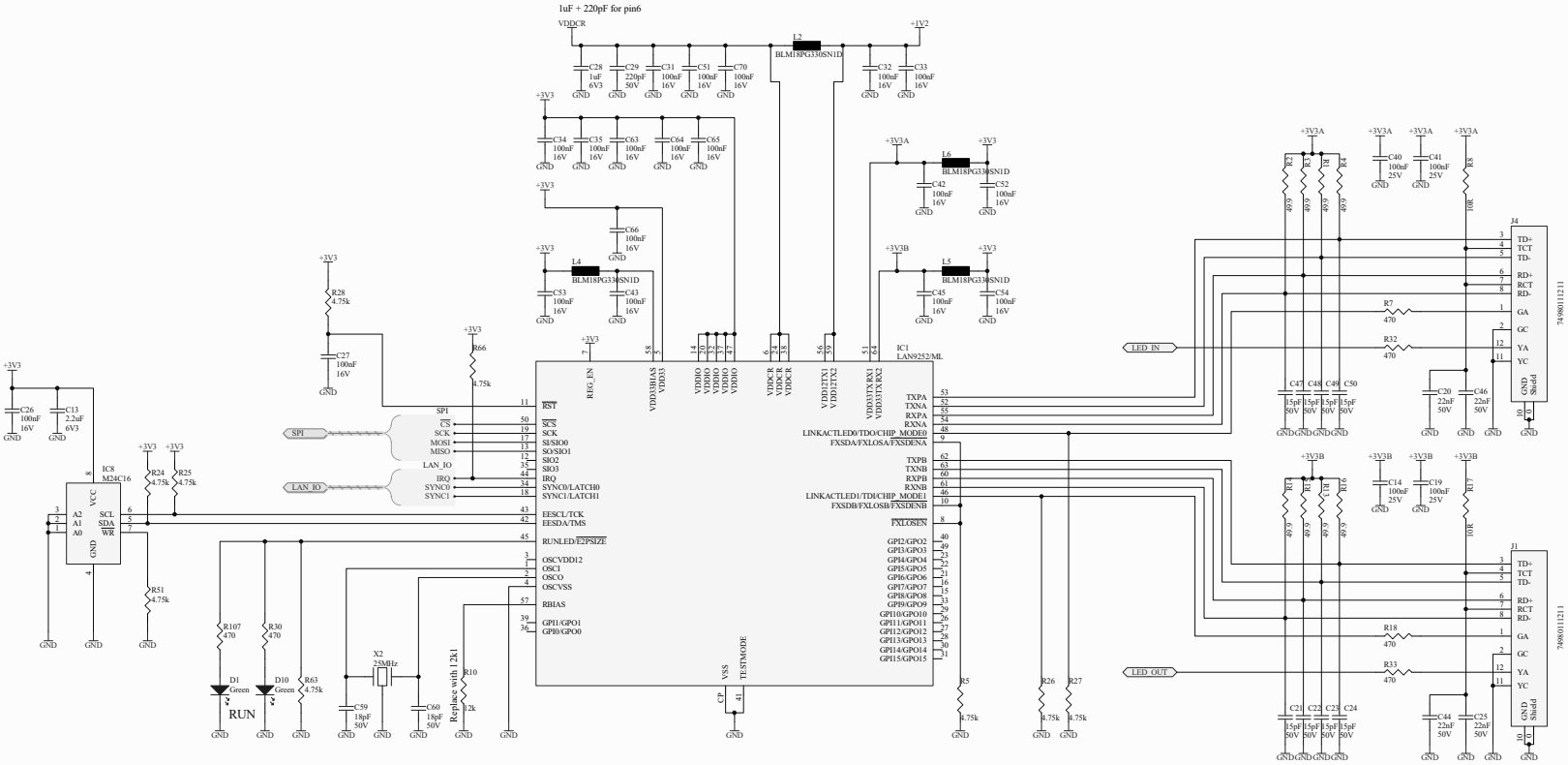

Title *EtherCAT tranceiver*			
Size: A2	Number: *	Revision: *	
Date: 2018/9/18	Time: 6:31:52	Sheet 4 of 6	
File: D:\github\DieBieSlave\DB10012_Control\EtherCAT.SchDoc			