PAPER GRANNY
arXiv Paper Interpretation Agent

Attention Is All You Need

A Clear Explanation of the Transformer

Date: 2026-03-16

Paper Information

Original Paper: arXiv:1706.03762

Vaswani et al., 2017

目录

1 Background 2

2 Key idea 2

3 Model overview 2

4 Attention (step-by-step) 4

4.1 Scaled dot-product attention 4

4.2 Multi-head attention 4

5 Other components 4

5.1 Position-wise FFN 4

5.2 Positional encoding 4

6 Training highlights 5

7 Results (selection) 5

8 Visualizations 5

9 Strengths and limits 6

10 Takeaway 6

11 References 6

1 Background

Why sequence models are hard

Many language tasks use sequences (sentences). RNNs process tokens one-by-one, which prevents parallel computation across positions and slows training. Attention lets each token directly consult any other token, enabling parallelism.

2 Key idea

Core insight

Replace recurrence and convolutions with self-attention + position-wise feed-forward layers. This yields both speedups (parallel training) and strong accuracy.

3 Model overview

The Transformer keeps an encoder-decoder structure. Each encoder layer: multi-head self-attention then position-wise FFN, with residual connections and layer norm. Decoder layers add masked self-attention and encoder-decoder attention.

PAPER GRANNY
arXiv Paper Interpretation Agent

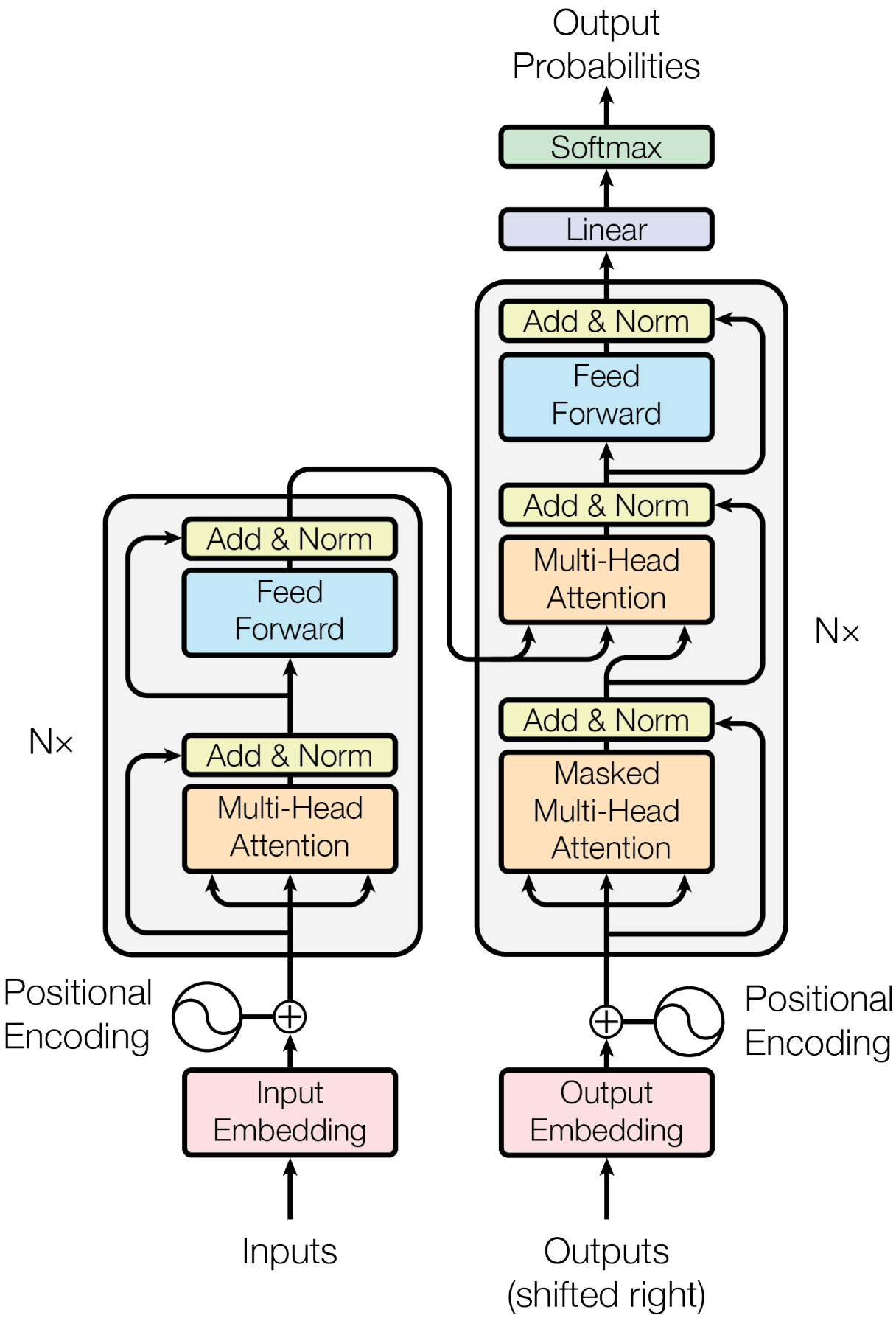

图 1: Transformer architecture (encoder left, decoder right).

4 Attention (step-by-step)

4.1 Scaled dot-product attention

Queries Q, keys K, and values V are matrices. Compute similarities, scale, softmax, then weighted sum:

$$\text{Attention}(Q, K, V) = \text{softmax}\left(\frac{QK^T}{\sqrt{d_k}}\right)V$$

Why scale by $\sqrt{d_k}$? If components have unit variance, the dot product variance grows with d_k; dividing keeps logits stable so softmax gradients are reasonable.

4.2 Multi-head attention

Project Q, K, V into h subspaces, run attention in parallel, then concatenate and project:

$$\text{MultiHead}(Q, K, V) = \text{Concat}(\text{head}_1, \ldots, \text{head}_h)W^O$$

In the base model: $d_{model} = 512$, $h = 8$, $d_k = d_v = 64$.

5 Other components

5.1 Position-wise FFN

Each position passes independently through two linear layers with ReLU:

$$\text{FFN}(x) = \text{ReLU}(xW_1 + b_1)W_2 + b_2$$

5.2 Positional encoding

Add fixed sinusoids to embeddings so the model knows token order:

$$PE_{(pos,2i)} = \sin\left(\frac{pos}{10000^{2i/d_{model}}}\right), \quad PE_{(pos,2i+1)} = \cos\left(\frac{pos}{10000^{2i/d_{model}}}\right)$$

6 Training highlights

Hyperparameters

- Data: WMT14 En-De (4.5M), En-Fr (36M)
- Optimizer: Adam ($\beta_1 = 0.9,\ \beta_2 = 0.98,\ \epsilon = 10^{-9}$)
- Learning rate: $lrate = d_{model}^{-0.5} \cdot \min(step^{-0.5},\ step \cdot warmup^{-1.5})$, warmup=4000
- Regularization: dropout (0.1 base), label smoothing $\epsilon_{ls} = 0.1$

7 Results (selection)

The Transformer matches or exceeds previous SOTA on translation with much less compute. Example BLEU (newstest2014): base EN-DE 27.3, big EN-DE 28.4; big EN-FR 41.8.

8 Visualizations

Many attention heads learn linguistically meaningful behaviors (long-range dependencies, coreference). Examples from the paper follow.

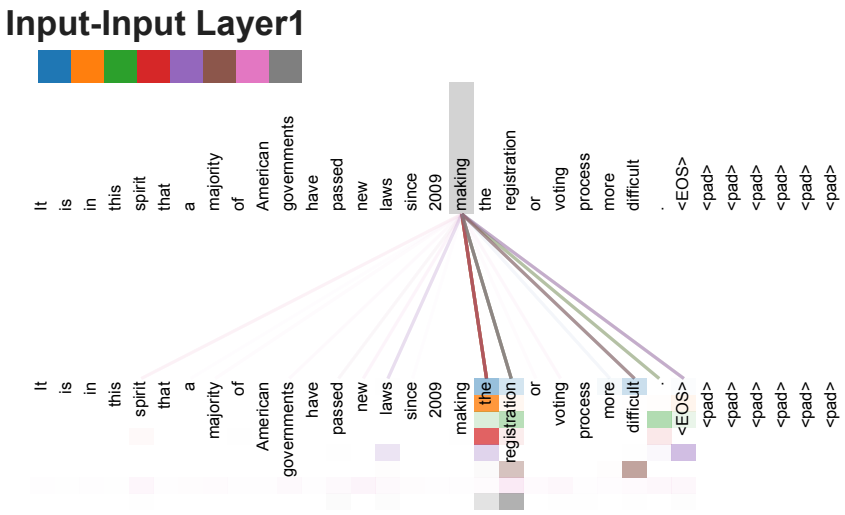

图 2: Attention following a long-distance dependency.

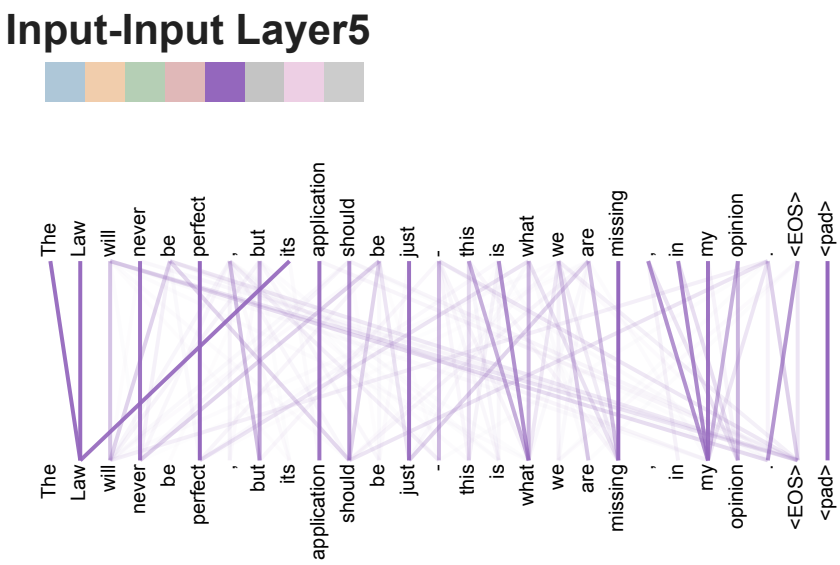

图 3: Heads that appear to resolve anaphora.

9 Strengths and limits

- Strength: parallel training, short path length between positions, strong empirical results.
- Limit: $O(n^2)$ time/memory in sequence length per layer; decoding still autoregressive.

10 Takeaway

Attention alone suffices to build powerful sequence models; the Transformer opened the door to fast, scalable NLP architectures.

11 References

参考文献

[1] Vaswani et al., "Attention Is All You Need", 2017.