Hedging Wind Risk through a Power-to-Gas Enabled Integrated Energy System

Junkai Liang
Department of Electrical and Computer Engineering
North Carolina State University
Raleigh, North Carolina USA
jliang9@ncsu.edu

Wenyuan Tang
Department of Electrical and Computer Engineering
North Carolina State University
Raleigh, North Carolina USA
wtang8@ncsu.edu

***Abstract*—Electric power system and natural gas system are deeply coupled because of the increasing popularity of gas-fired generators and the maturity of power-to-gas (P2G) technology. An energy hub is considered as a multi-generation system where multiple energy carriers are converted and stored. We propose an interval optimization based method to solve a stochastic security constrained unit commitment problem, and to determine the optimal operation of energy hubs considering the uncertainty of renewable generation. Energy hubs equipped with the P2G technology are modeled in detail to coordinate the integrated energy system through the optimal energy conversion, subject to the security constraints of power and natural gas networks. Quadratic interval optimization and Benders decomposition are implemented to reduce the computational burden without loss of optimality. We conduct a case study for a 6-bus electric network with a 6-node gas network to verify the applicability of the proposed method, and to evaluate the economic value of energy hubs.**

***Index Terms*—Energy hub, integrated energy system, interval optimization, power-to-gas, renewable energy.**

I. Introduction

As results of low natural gas prices, declining renewables technology costs and supportive policies, most new electricity generation capacity will be natural gas and renewables after 2022 [1]. The extensive installation of gas-fired power plants has led power systems and natural gas systems to getting interdependent. Therefore, it is advantageous to investigate the integrated energy system. On the other hand, renewable energy as an intermittent energy resource cannot provide firm power, as conventional units do. Operator-induced curtailment of wind and solar generation typically occurs to maintain certain levels of system reliability [2].

An energy hub is considered as a unit where multiple energy carriers can be converted, conditioned, and stored. It represents an interface between different energy infrastructures and loads. The flexible combination of different energy carriers using conversion and storage technology offers a powerful approach for various system improvements. When designing multi-energy systems, it is useful to investigate energy hubs among various energy carriers [3]. A few studies have discussed the operation of energy hubs. A bilevel stochastic programming problem model of the decision-making of an energy hub manager is presented in [4]. Power-to-gas (P2G) technology is a promising method to provide large-scale seasonal or long-term storage in energy hubs. Moreover, it is an effective method to reduce renewable curtailment. P2G starts with converting electricity to hydrogen through water electrolysis, and it can also further react with carbon dioxide to produce synthetic natural gas which can then be supplied to meet natural gas demands and stored effectively [5]. The feasibility of implementing P2G systems to absorb surplus renewable energy is evaluated in [6]. Reference [7] discusses the use of P2G without modeling the gas network. In [8], a two-stage DC OPF model coupled with a gas network transient analysis model is developed to evaluate the changes in power flows caused by P2G facilities. A probabilistic optimal power flow calculation based on a three-point estimate method is specifically developed to quantify the levels of wind curtailment and the P2G transformation in [9]. However, energy hub and unit commitment are not considered in the two aforementioned studies.

This paper is organized as follows. In Section II, we formulate a stochastic security constrained unit commitment (SCUC) problem, which incorporates energy hubs equipped with the P2G technology, while meeting the operating constraints in both the power and natural gas networks. In Section III, we introduce the interval optimization and Benders decomposition, which can be used to solve the stochastic SCUC problem. We then present a case study to validate our model, and to demonstrate the economic value of the energy hubs in Section IV. Section V concludes the paper.

II. System Modeling

A. System Objective

The objective function consists of the power generation cost, the start-up cost, the natural gas supply cost, the curtailment penalty, and the operational cost of P2G. Note that the fuel cost of gas-fired generator (G2P) is included in the natural gas supply cost. Physical trading contracts of natural gas are usually expressed in volumes per day. Thus, the gas price is fixed within a day. The system objective is to minimize the

978-1-5386-7138-2/18/$31.00 © 2018 IEEE

total cost over the scheduling horizon T:

$$\min \sum_{t=1}^{T} \Big\{ \sum_{i=1}^{N_{\mathrm{G}}} [f(P_{i,t}) + S_i I_{i,t}(1 - I_{i,t-1})] + \sum_{h=1}^{N_{\mathrm{H}}} [S_h^{\mathrm{G2P}} I_{h,t}^{\mathrm{G2P}} (1 - I_{h,t-1}^{\mathrm{G2P}}) + (\sigma_h^{\mathrm{P2G}} P_{h,t}^{\mathrm{P2G}})] \Big\} + \Pi^{\mathrm{re}} \sum_{t=1}^{T} \sum_{h=1}^{N_{\mathrm{H}}} P_{h,t}^{\mathrm{cu}} + \Pi^{\mathrm{g}} \sum_{t=1}^{T} \sum_{m=1}^{N_{\mathrm{N}}} F_{m,t}^{\mathrm{S}}, \quad (1)$$

where $f(\cdot)$ denotes the fuel cost function of coal-fired units; let N_{G}, N_{H}, and N_{N} be the number of coal-fired units, energy hubs, and gas nodes respectively; S_h^{G2P} denotes the start-up cost of G2P at energy hub h, and S_i denotes the start-up cost of coal-fired unit i; binary variables $I_{i,t}$ and $I_{h,t}^{\mathrm{G2P}}$ denote the commitment status of unit i and G2P in energy hub h in period t respectively, where 1 means on, 0 means off; $P_{i,t}$ denotes the power output of generation unit i in period t, $P_{h,t}^{\mathrm{P2G}}$ denotes the power of P2G at energy hub h in period t, $F_{m,t}^{\mathrm{S}}$ denotes the gas supplier injection of node m in period t, and $P_{h,t}^{\mathrm{cu}}$ denotes the renewable curtailment at energy hub h in period t; and σ_h^{P2G}, Π^{re}, and Π^{g} are the operational costs of P2G, curtailment penalty, and gas price respectively.

B. Modeling the Energy Hub

We start our model with modeling the energy hub, which provides an interface between the power and natural gas networks. Electricity and natural gas are consumed at the input ports and injected at the output ports. The model of an energy hub is given in Fig. 1.

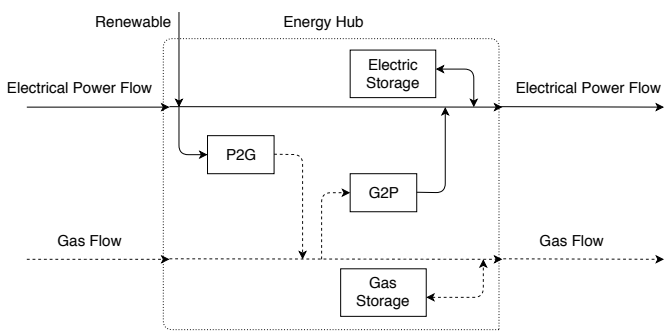

Fig. 1: General scheme of an energy hub.

The mapping of input carriers to output ones of an energy hub can be modeled by the following equations:

$$P_{h,t}^{\mathrm{out}} - P_{h,t}^{\mathrm{in}} = P_{h,t}^{\mathrm{re}} + P_{h,t}^{\mathrm{G2P}} - P_{h,t}^{\mathrm{P2G}} + P_{h,t}^{\mathrm{disc}} - P_{h,t}^{\mathrm{ch}}, \quad (2)$$

$$F_{h,t}^{\mathrm{out}} - F_{h,t}^{\mathrm{in}} = F_{h,t}^{\mathrm{P2G}} - F_{h,t}^{\mathrm{G2P}} + F_{h,t}^{\mathrm{disc}} - F_{h,t}^{\mathrm{ch}}, \quad (3)$$

where subscripts h and t denote energy hub $h \in \{1, \ldots, N_{\mathrm{H}}\}$ and time period $t \in \{1, \ldots, T\}$; superscripts in and out denote the input ports and output ports; $P_{h,t}^{\mathrm{re}}$, $P_{h,t}^{\mathrm{G2P}}$, and $P_{h,t}^{\mathrm{P2G}}$ denote the renewable generation, the power output of G2P, and the power consumed by P2G; $F_{h,t}^{\mathrm{P2G}}$ and $F_{h,t}^{\mathrm{G2P}}$ denote the gas produced by P2G and the gas consumed by G2P; and superscripts disc and ch denote discharging and charging.

Higher heating value can be used to convert electrical power into volumetric gas flow and vice versa [8], as shown in the following:

$$F_{h,t}^{\mathrm{P2G}} = \frac{\eta^{\mathrm{P2G}} P_{h,t}^{\mathrm{P2G}}}{HHV_{\mathrm{SNG}}}, \quad (4)$$

$$P_{h,t}^{\mathrm{G2P}} = \eta^{\mathrm{G2P}} F_{h,t}^{\mathrm{G2P}} HHV_{\mathrm{SNG}}, \quad (5)$$

where $HHV_{\mathrm{SNG}} = 38.42\ \mathrm{MJ/m^3}$ is the higher heating value of synthetic natural gas, and η^{P2G} and η^{G2P} are the efficiency factors of P2G and G2P respectively.

The conversion rate of G2P and P2G should be constrained by their minimum and maximum capacity limits:

$$0 \le P_{h,t}^{\mathrm{P2G}} \le P_{\mathrm{P2G}}^{\max}, \quad (6)$$

$$P_{\mathrm{G2P}}^{\min} \times I_{h,t}^{\mathrm{G2P}} \le P_{h,t}^{\mathrm{G2P}} \le P_{\mathrm{G2P}}^{\max} \times I_{h,t}^{\mathrm{G2P}}, \quad (7)$$

where superscripts max and min denote maximum and minimum throughout the paper.

The storage model is captured by the following equations:

$$PL_{h,t} = PL_{h,t-1} + \eta_{\mathrm{e}}^{\mathrm{ch}} P_{h,t}^{\mathrm{ch}} - \frac{P_{h,t}^{\mathrm{disc}}}{\eta_{\mathrm{e}}^{\mathrm{disc}}}, \quad (8)$$

$$FL_{h,t} = FL_{h,t-1} + \eta_{\mathrm{g}}^{\mathrm{ch}} F_{h,t}^{\mathrm{ch}} - \frac{F_{h,t}^{\mathrm{disc}}}{\eta_{\mathrm{g}}^{\mathrm{disc}}}, \quad (9)$$

$$0 \le PL_{h,t} \le PL_h^{\max},\ 0 \le FL_{h,t} \le FL_h^{\max}, \quad (10)$$

$$0 \le P_{h,t}^{\mathrm{ch}} \le P_{\mathrm{ch}}^{\max},\ 0 \le P_{h,t}^{\mathrm{disc}} \le P_{\mathrm{disc}}^{\max}, \quad (11)$$

$$0 \le F_{h,t}^{\mathrm{ch}} \le F_{\mathrm{ch}}^{\max},\ 0 \le F_{h,t}^{\mathrm{disc}} \le F_{\mathrm{disc}}^{\max}, \quad (12)$$

where $PL_{h,t}$ and $FL_{h,t}$ are the states of charge of the electric storage and the gas storage at energy hub h in period t with efficiency factors η_{e} and η_{g}. At the optimal solution, only one of the charging and the discharging variables is non-zero, which means the storage is either in the charging mode or the discharging mode but not in both.

We assume the state of charge at the end of the scheduling horizon should be equal to those at the beginning, as shown in the following:

$$\eta_{\mathrm{e}}^{\mathrm{disc}} \eta_{\mathrm{e}}^{\mathrm{ch}} \sum_{t=1}^{T} P_{h,t}^{\mathrm{ch}} = \sum_{t=1}^{T} P_{h,t}^{\mathrm{disc}}, \quad (13)$$

$$\eta_{\mathrm{g}}^{\mathrm{disc}} \eta_{\mathrm{g}}^{\mathrm{ch}} \sum_{t=1}^{T} F_{h,t}^{\mathrm{ch}} = \sum_{t=1}^{T} F_{h,t}^{\mathrm{disc}}. \quad (14)$$

C. Modeling the Power Network

The constraints of the power system include system load balance, power generation limits, ramp up and down limits, power transmission constraints, and spinning reserves. The load balance and the power generation limits are given by:

$$\sum_{i=1}^{N_{\mathrm{G}}} P_{i,t} + \sum_{h=1}^{N_{\mathrm{H}}} (P_{h,t}^{\mathrm{out}} - P_{h,t}^{\mathrm{in}}) = \sum_{j=1}^{N_{\mathrm{B}}} P_{j,t}^{\mathrm{D}}, \quad (15)$$

$$P_i^{\min} \times I_{i,t} \le P_{i,t} \le P_i^{\max} \times I_{i,t}, \quad (16)$$

where $P^{\mathrm{D}}_{j,t}$ is the electric load at bus j in period t; let N_{B} be the number of electric buses; and subscript j and i denote electric bus $j \in \{1, \ldots, N_{\mathrm{B}}\}$ and coal-fired unit $i \in \{1, \ldots, N_{\mathrm{G}}\}$.

The shift factor **SF** matrix, with a dimension of the number of lines by the number of buses, is used to calculate power flows on each transmission line:

$$-\mathbf{L^{max}} \leq \mathbf{SF} \times \mathbf{P_{inj}} \leq \mathbf{L^{max}}, \tag{17}$$

where $\mathbf{P_{inj}}$ is the matrix of power injection at each bus with a dimension of the number of buses by the number of time horizons, and $\mathbf{L^{max}}$ is the matrix of the maximum transmission line capacity with a dimension of the number of lines by the number of time horizons.

In our model, the spinning reserve is used to address the load forecast error, where only the upward spinning reserve is considered. Moreover, the change of power generation should not exceed the ramp limits:

$$-RD_i \leq P_{i+1,t} - P_{i,t} \leq RU_i, \tag{18}$$

$$\sum_{i=1}^{N_G} SR_{i,t} + \sum_{h=1}^{N_H} SR_{h,t} \geq SR_t^{\min}, \tag{19}$$

where RD and RU are the ramp down and ramp up limits respectively; $SR_{i,t}$ is the spinning reserve provided by coal-fired unit i in period t; $SR_{h,t}$ is the spinning reserve provided by the G2P unit and storage in energy hub h in period t; and $SR^{\min}$ is the smallest spinning reserve required.

D. Modeling the Natural Gas Network

We consider a steady state model for the natural gas transmission system. The gas flow between node m and n through a pipeline is stated as a function of the pressures at the two nodes:

$$F_{mn,t}|F_{mn,t}| = C^2_{mn}(\omega^2_{m,t} - \omega^2_{n,t}), \tag{20}$$

$$-F^{\max}_{mn} \leq F_{mn,t} \leq F^{\max}_{mn},\ \omega^{\min}_m \leq \omega_{m,t} \leq \omega^{\max}_m, \tag{21}$$

where F_{mn} denotes the gas flow between node $m \in \{1, \ldots, N_{\mathrm{N}}\}$ and $n \in \{1, \ldots, N_{\mathrm{N}}\}$; $\omega_{m,t}$ and $\omega_{n,t}$ are the node pressures at gas node m and n in time period t; and C_{mn} is a coefficient that captures the pipeline characteristics.

Compressors are used to raise the pressure:

$$H_{k,t} = E_k F^{\mathrm{C}}_{k,t}\left[\left(\frac{\omega^{out}_{k,t}}{\omega^{in}_{k,t}}\right)^{Z_k} - 1\right], \tag{22}$$

$$\tau_{k,t} = \alpha_k + \beta_k H_{k,t} + \gamma_k H^2_{k,t}, \tag{23}$$

$$1 \leq \frac{\omega^{\mathrm{out}}_{k,t}}{\omega^{\mathrm{in}}_{k,t}} \leq R^{\max}_k,\ 0 \leq H_{k,t} \leq H^{\max}_k, \tag{24}$$

where E_k is a parameter corresponding to the design of compressor k and Z_k = 0.236; superscripts out and in denote the outlet and inlet of compressor; H_k is the horsepower of gas-driven compressor k; $F^{\mathrm{C}}_{k,t}$ is the gas flow through compressor k in period t; $R^{\max}_k$ denotes the maximum compression ratio of compressor k; α, β and γ are coefficients of compressors; and $\tau_{k,t}$ denotes the gas consumed by compressor k in period t.

In our model, (20), (22) and (23) are linearized using piecewise linear models in [10]. The gas supplier injection, the gas load demands, the gas-driven compressor demands, the injection from energy hubs, and the gas flows through pipelines and compressors are balanced at each node:

$$\begin{aligned} F^{\mathrm{S}}_{m,t} + \sum_{h\in m}(F^{\mathrm{out}}_{h,t} - F^{\mathrm{in}}_{h,t}) = F^{\mathrm{D}}_{m,t} + \sum_{k\in m}\tau_{k,t} \\ + \sum_{n\in m} F_{mn,t} + \sum_{k\in m} F^{\mathrm{C}}_{k,t}, \end{aligned} \tag{25}$$

$$0 \leq F^{\mathrm{S}}_{m,t} \leq F^{\mathrm{S,max}}_m, \tag{26}$$

where $F^{\mathrm{D}}_{m,t}$ denotes the gas load at node m in period t.

E. Modeling the Renewables

An interval number is a set of real numbers with the property that any number that lies between two numbers in the set is also included in the set:

$$\tilde{a} = [\underline{a}, \overline{a}] = \{a | \underline{a} \leq a \leq \overline{a}\}, \tag{27}$$

where $\tilde{(\cdot)}$ denotes interval numbers. $\underline{a}$ and $\overline{a}$ are the lower and upper bounds of $\tilde{a}$.

Given a forecast error range e, the generation of renewable can be modeled as:

$$\begin{aligned} \tilde{P}^{\mathrm{re}}_{h,t} &= [\underline{P}^{\mathrm{re}}_{h,t}, \overline{P}^{\mathrm{re}}_{h,t}] \\ &= \{\tilde{P}^{\mathrm{re}}_{h,t} \mid (1-e)P^{\mathrm{exre}}_{h,t} \leq \tilde{P}^{\mathrm{re}}_{h,t} \leq (1+e)P^{\mathrm{exre}}_{h,t}\}, \end{aligned} \tag{28}$$

where $P^{\mathrm{exre}}_{h,t}$ is the expected renewable generation.

III. Interval SCUC Formulation

A. Interval Based Quadratic Optimization

A quadratic interval optimization is described in [11] as:

$$\min_{\tilde{\mathbf{x}}} \tilde{Z} = \tilde{\mathbf{c}}\tilde{\mathbf{x}} + \tilde{\mathbf{x}}'\mathbf{Q}\tilde{\mathbf{x}} \tag{29a}$$

$$\text{s.t.} \quad \tilde{\mathbf{A}}\tilde{\mathbf{x}} \leq \tilde{\mathbf{b}}, \tag{29b}$$

$$\tilde{\mathbf{x}} \geq 0, \tag{29c}$$

where $\tilde{\mathbf{x}} = (\tilde{x}_j, j = 1, \ldots, n)$ is the vector of decision variables; $\mathbf{Q} = (q_{ij}, i, j = 1, \ldots, n)$ is a symmetric and semidefinite matrix; $\tilde{\mathbf{c}} = (\tilde{c}_j, j = 1, \ldots, n)$, $\tilde{\mathbf{b}} = (\tilde{b}_i, i = 1, \ldots, m)$, and $\tilde{\mathbf{A}} = (\tilde{a}_{ij}, i, j = 1, \ldots, n)$ are the vectors and matrices of coefficients.

The upper and lower bounds of the optimal objective value can be determined by:

$$\overline{Z} = \max_{\tilde{\mathbf{c}},\tilde{\mathbf{b}},\tilde{\mathbf{a}}} \min_{\tilde{\mathbf{x}}} \tilde{Z}, \tag{30}$$

$$\underline{Z} = \min_{\tilde{\mathbf{c}},\tilde{\mathbf{b}},\tilde{\mathbf{a}}} \min_{\tilde{\mathbf{x}}} \tilde{Z}, \tag{31}$$

where the inner program calculates the objective value for each c_j, b_i, and a_{ij} specified by the outer program, and the outer program determines the values of c_j, b_i, and a_{ij} that produce the smallest objective value.

By Lagrangian duality, (30) can be transformed into the following nonlinear program:

$$\overline{Z} = \max_{\mathbf{x},\boldsymbol{\lambda},\boldsymbol{\delta}} Z = -\frac{1}{2}\sum_{i=1}^{n}\sum_{j=1}^{n} q_{ij}x_i x_j - \sum_{i=1}^{m}\underline{B}_i\lambda_i \tag{32a}$$

$$\text{s.t.} \quad \sum_{i=1}^{n} q_{ij}x_i + \sum_{i=1}^{m}\tilde{a}_{ij}\lambda_i - \delta_j = -c_j, \tag{32b}$$

$$\underline{C}_j \le c_j \le \overline{C}_j,\ j = 1, 2, \ldots, n, \tag{32c}$$

$$\lambda_i \ge 0,\ i = 1, \ldots, m, \tag{32d}$$

The lower bound (31) can be combined into:

$$\underline{Z} = \min_{\mathbf{x}} Z = \sum_{j=1}^{n}\underline{C}_j x_j + \frac{1}{2}\sum_{i=1}^{n}\sum_{j=1}^{n} q_{ij}x_i x_j \tag{33a}$$

$$\text{s.t.} \quad \sum_{j=1}^{n}\underline{A}_{ij}x_j \le \overline{B}_i,\ i = 1, \ldots, m, \tag{33b}$$

$$x_j \ge 0,\ j = 1, 2, \ldots, n, \tag{33c}$$

By solving two problems above, we can obtain two solutions $\overline{\mathbf{x}}^*$ and $\underline{\mathbf{x}}^*$. Following the same approaches in [12], it can be shown that the interval hulls of solution sets for our problem are given by:

$$\tilde{\mathbf{x}}^* = [\min(\overline{\mathbf{x}}^*, \underline{\mathbf{x}}^*), \max(\overline{\mathbf{x}}^*, \underline{\mathbf{x}}^*)]. \tag{34}$$

This highlights the advantage of interval optimization: one only needs to solve two deterministic optimization problems by mapping two extreme points instead of solving a large-scale stochastic optimization problem.

B. Interval SCUC Formulation

Although the interval programming has been widely used, there has not been any effective method to handle this mixed integer SCUC problem yet. To avoid this computational intractability, we decompose the problem into the master unit commitment problem under the expected renewable generation, and a feasibility check subproblem. A compact matrix representation of the master problem is given by:

$$\min_{\mathbf{x},\mathbf{y}} \quad c(\mathbf{x}) + q(\mathbf{y}) \tag{35a}$$

$$\text{s.t.} \quad F(\mathbf{x}) \le \mathbf{f}, \tag{35b}$$

$$H(\mathbf{y}) \le \mathbf{h}, \tag{35c}$$

$$A(\mathbf{x}, \mathbf{y}) \le \mathbf{g}, \tag{35d}$$

$$C_{\text{cut}}(\mathbf{x}, \mathbf{y}) \le 0, \tag{35e}$$

where $\mathbf{x}$ is a collection of the commitment status of the binary variables I's; $\mathbf{y}$ is a collection of the dispatch related decisions of the continuous variables; and C_{cut} denotes the possible Benders cuts returned from the subproblem.

The purpose of the master problem is to find out the optimal unit commitment under the expected condition, which should be feasible to all scenarios. A feasibility check would be conducted in the subproblem and corresponding Benders cuts would be returned to the master problem. Any violation of the constraints in the subproblem indicates that the unit commitment decisions in the master problem cannot satisfy the operational requirements of some certain scenarios. Benders cuts would be generated to exclude those decisions in the master problem. The largest deviation will happen at the boundary where $P^{\text{re}}_{h,t} = \underline{P}^{\text{re}}_{h,t}$ or $P^{\text{re}}_{h,t} = \overline{P}^{\text{re}}_{h,t}$. The subproblem is given below:

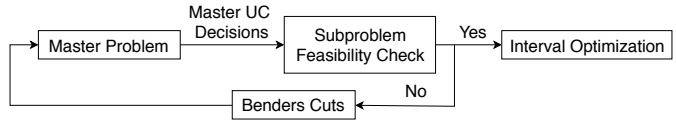

Fig. 2: Solution procedure of interval SCUC.

$$\min \quad \boldsymbol{\epsilon}_1 + \boldsymbol{\epsilon}_2 + \boldsymbol{\epsilon}_3 + \boldsymbol{\epsilon}_4 \tag{36a}$$

$$\text{s.t.} \quad H(\mathbf{y}) \le \overline{\mathbf{h}} + \boldsymbol{\epsilon}_1, \tag{36b}$$

$$H(\mathbf{y}) \le \underline{\mathbf{h}} + \boldsymbol{\epsilon}_2, \tag{36c}$$

$$A(\mathbf{x}, \mathbf{y}) \le \overline{\mathbf{g}} + \boldsymbol{\epsilon}_3, \tag{36d}$$

$$A(\mathbf{x}, \mathbf{y}) \le \underline{\mathbf{g}} + \boldsymbol{\epsilon}_4, \tag{36e}$$

$$\boldsymbol{\epsilon}_1, \boldsymbol{\epsilon}_2, \boldsymbol{\epsilon}_3, \boldsymbol{\epsilon}_4 \ge 0, \tag{36f}$$

where $\boldsymbol{\epsilon}_1$, $\boldsymbol{\epsilon}_2$, $\boldsymbol{\epsilon}_3$, and $\boldsymbol{\epsilon}_4$ are the nonnegative slack variables.

If the objective value obtained from the subproblem is larger than the predefined threshold, Benders cuts will be returned to the master problem. The entire framework is summarized in Fig. 2. The equations below will be used as (35e) in the master problem:

$$H(\mathbf{y}) + \boldsymbol{\epsilon}_1 + \boldsymbol{\epsilon}_2 \le \mathbf{h}, \tag{37}$$

$$A(\mathbf{x}, \mathbf{y}) + \boldsymbol{\epsilon}_3 + \boldsymbol{\epsilon}_4 \le \mathbf{g}. \tag{38}$$

IV. Case Study

A. Description of the Test Cases

A 6-bus power network coupled with a 6-node gas network adapted from the model in [13], is used for our case study. The topology is shown in Fig. 3. The power network has one coal-fired unit G2, one gas-fired unit G3, one energy hub with 100 MW P2G installed, seven transmission lines, and four loads. The wind capacity in the energy hub is 140 MW, accounting for 25% of the total system capacity. The natural gas network has five pipelines, two compressors, two suppliers, two end-users. Node a is connected to the energy hub. The capacities of the electric and gas storage in the energy hub are 10 MW and 2000 Mcf respectively. We assume the scheduling horizon is 24 hours. Since the gas contract is on a daily or a monthly basis, we assume a flat load profile over the scheduling horizon. The proposed problem is solved by MATLAB/CPLEX 12.8.

Three cases are taken into consideration in our case study, and we assume that the line capacities are large enough in Case 1 and Case 2:

- Case 1: Operation strategy without the use of storage and P2G in the energy hub;

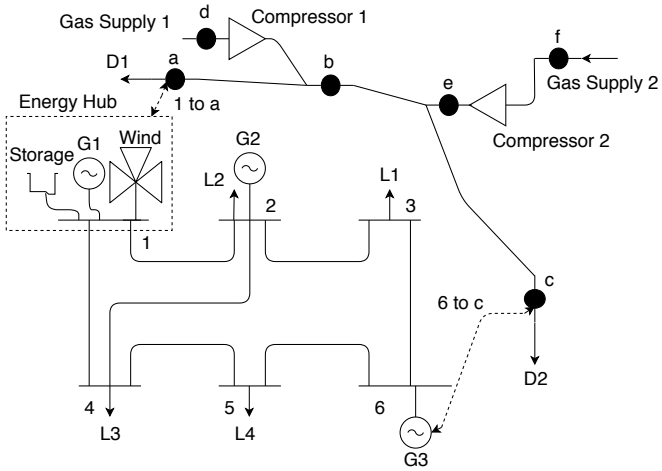

Fig. 3: An integrated energy system comprised of a 6-bus power network and a 6-node gas network.

- Case 2: Impact of the use of storage and P2G in the energy hub;
- Case 3: Impact of the use of storage and P2G in the energy hub for the transmission constrained network.

B. Value of the Energy Hub

To evaluate the use of storage and P2G, we compare the operation of the systems in Case 1 and Case 2. The optimal decisions of the commitment of generator 1 are always off, but as shown in Fig. 4, there are some differences of the commitment of generator 3. The status of generator 3 at 8:00 is off in Case 2 because of the storage. From 1:00 to 8:00, generator 2 is on and is operating at the minimum limit to meet the load requirements of the pessimistic scenario. Therefore, it will lead to wind curtailment in the optimistic scenario. Fig. 5 shows the wind curtailment without the use of P2G and storage and the relief of curtailment with the use of P2G and storage. It is observed that the wind generation is mainly curtailed between 1:00 to 6:00 to balance the load and the generation. The master problem gives a commitment schedule based on the pessimistic scenario, hence the curtailment is more serious in the optimistic scenario.

The excess wind generation is converted to gas using P2G, and the gas will be used to serve gas residential loads. A lower total cost associated with a lower total gas supply can be expected. Fig. 5 shows the optimal operation of energy hub, where most curtailment is relieved by P2G. With the use of storage and P2G, all the wind generation is exploited. As shown in Fig. 6, a lower gas supply happens because the gas produced by P2G is used to serve gas loads between 1:00 to 6:00. The total gas supply over the entire time horizon is shown in Table. I. The difference of gas supply for each bound is 1133 Mcf and 665 Mcf respectively. The daily cost is reduced by \$7,280, \$2,520, and \$4,920 respectively, as shown in Table. II. An overestimate of wind generation in the optimistic scenario leads to more gas produced by P2G and a higher quantity of decrease is observed.

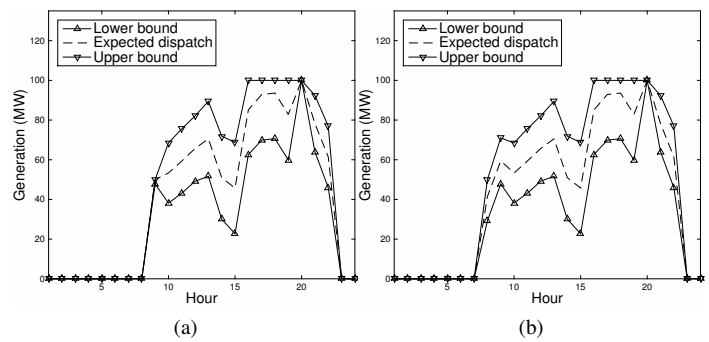

Fig. 4: (a) The optimal interval power dispatch of generator 3 with the use of P2G and storage. (b) The optimal interval power dispatch of generator 3 without the use of P2G and storage.

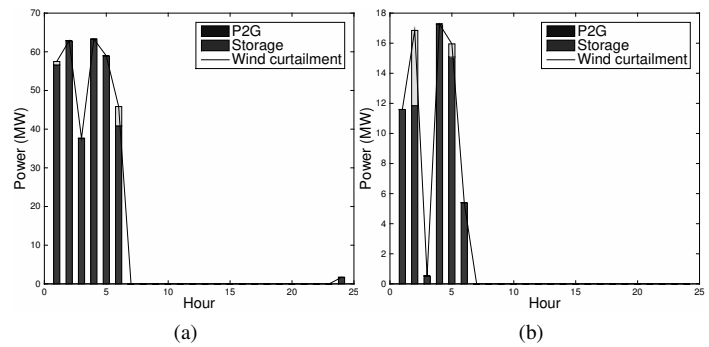

Fig. 5: (a) The relief of wind curtailment under the optimistic scenario. (b) The relief of wind curtailment under the pessimistic scenario.

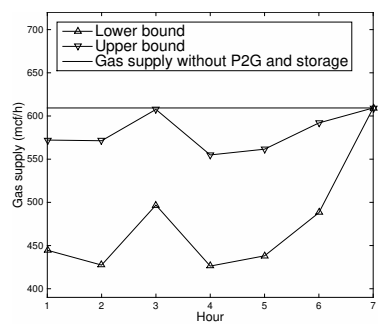

Fig. 6: The gas supply in the first seven hours.

TABLE I: Comparison of Total Gas Supply

Total Supply (mcf)	Optimistic	Pessimistic	Expected Supply
With EH	18,672	22,189	20,580
Without EH	19,805	22,854	21,493

TABLE II: Comparison of Total Cost

Total Cost (\$)	Optimistic	Pessimistic	Expected Cost
With EH	199,130	214,820	206,920
Without EH	206,410	217,340	211,840

C. Impact of Transmission Constraints

We adjust the transmission capacity of the transmission line 1-4 from 100 MW to 55 MW in Case 3, which would lead to wind curtailment during peak load hours. The operation of energy hub is shown in Fig. 7. Compared with Case 2, the wind curtailment is higher because it is induced by both the line capacity limits and the generator minimum limits. Similarly, most of the wind curtailment is relieved by P2G, and the hourly gas supply is given in Fig. 8. The gas supply decreases from 1:00 to 24:00 in this case. It is different from Case 2 because the wind curtailment happens all day in this case and the excess generation is used to serve gas loads. It is observed that the gas supply with the use of storage and P2G is always less than or equal to the gas supply without the use of storage and P2G. The electric storage is discharging 4.25 MW power at 9:00 in the optimistic scenario which leads to a lower gas supply. The total cost in the optimistic and pessimistic scenarios is $207,650 and $216,960 respectively. The cost is higher than the cost in Case 2 because of the higher wind curtailment. The total cost is $222,680 and $226,720 respectively, for the transmission constrained system without the use of storage and P2G.

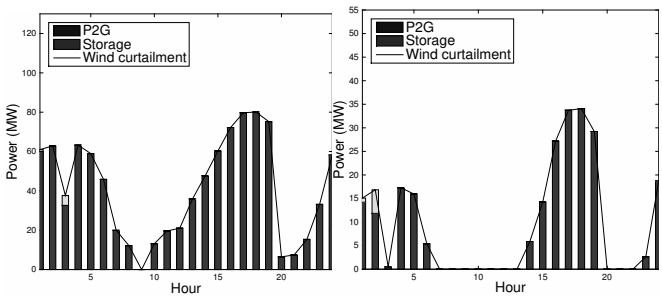

(a) (b)

Fig. 7: (a) The relief of wind curtailment for the transmission constrained system under the optimistic scenario. (b) The relief of wind curtailment for the transmission constrained system under the pessimistic scenario.

V. Conclusion

In this paper, an interval optimization based stochastic SCUC model for an electricity-gas integrated energy system has been proposed to optimally coordinate the operation of the power and natural gas systems incorporating wind uncertainties and energy hubs. Benders decomposition is used to decompose the stochastic mixed-integer quadratic programming problem into one deterministic mixed-integer quadratic programing problem and one stochastic quadratic programming problem. Quadratic interval optimization is used as a scenario reduction method to reduce computational burden without loss of optimality. Energy hubs equipped with P2G technology are modeled in detail to coordinate the integrated system through optimal energy conversion subject to the security constraints of both systems. Our case study has demonstrated that energy hubs can be a promising method to reduce the wind curtailment, and hence reduce the total operational cost and the total gas supply, especially when the curtailment is serious. In future work, we will investigate the economic viability, the siting and the sizing of energy hubs, and explore other uncertainties like gas prices in integrated energy systems.

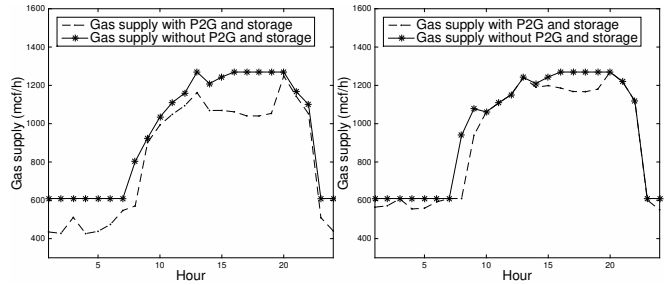

(a) (b)

Fig. 8: (a) The gas supply for the transmission constrained system under the optimistic scenario. (b) The gas supply for the transmission constrained system under the pessimistic scenario.

References

[1] The U.S. Energy Information Administration, "Annual energy outlook 2018," [Online]. Available: https://www.eia.gov/outlooks/aeo/.

[2] National Renewable Energy Laboratory, "Wind and solar energy curtailment: experience and practices in the United States," Tech. Rep, [Online]. Available: https://www.nrel.gov/publications.

[3] M. Geidl, G. Koeppel and P. Favre-Perrod, "Energy hubs for the future," *IEEE Power and Energy Mag.*, vol. 5, no. 1, pp. 24–30, Jan./Feb. 2007.

[4] A. Najafi, H. Falaghi, J. Contreras and M. Ramezani, "A stochastic bilevel model for the energy hub manager problem," *IEEE Trans. Smart Grid*, vol. 8, no. 5, pp. 2394–2404, Sep 2017.

[5] X. Zhang, C. Bauer, C. L. Mutel and K. Volkart, "Life cycle assessment of power-to-gas: approaches, system variations and their environmental implications," *Appl. Energy*, vol. 190, pp. 326–338, March 2017.

[6] T. Estermann, M. Newborough and M. Sterner, "Power-to-gas systems for absorbing excess solar power in electricity distribution networks," *Int. J. Hydrogen Energy*, vol. 190, no.32, pp. 13950–13959, Aug. 2016.

[7] M. Ban, J. Yu, M. Shahidehpour and Y. Yao, "Integration of power-to-hydrogen in day-ahead security constrained unit commitment with high wind penetration," *J. Mod. Power Syst. Clean Energy*, vol. 5, no. 3, pp. 337–349, 2017.

[8] S. Clegg and P. Mancarella, "Integrated modeling and assessment of the operational impact of power-to-gas (P2G) on electrical and gas transmission networks," *IEEE Trans. Sustain. Energy*, vol. 6, no. 4, pp. 117–130, Oct. 2015.

[9] G. Sun, S. Chen, Z. Wei and S. Chen, "Multi-period integrated natural gas and electric power system probabilistic optimal power flow incorporating power-to-gas units," *J. Mod. Power Syst. Clean Energy*, vol. 5, no. 3, pp. 412–423, 2017.

[10] C. M. Correa-Posada and P. Sanchez-Martin, "Gas network optimization: a comparison of piecewise linear models," [Online]. Available: http://www.optimization-online.org/DB_FILE/2014/10/4580.pdf.

[11] S. Liu and R. Wang, "A numerical solution method to interval quadratic programming," *Appl. Math. Comput.*, vol. 189, pp. 1274–1281, 2007.

[12] T. Ishizaki, M. Koike, N. Ramdani, Y. Ueda, T. Masuta, T. Oozeki, T. Sadamoto and J. Imura, "Interval quadratic programming for day-ahead dispatch of uncertain predicted demand," *Automatica*, vol. 64, pp. 163–173, 2016.

[13] X. Zhang, L. Che, M. Shahidehpour, A. Alabdulwahab and A. Abusorrah, "Electricity-natural gas operation planning with hourly demand response for deployment of flexible ramp," *IEEE Trans. Sustain. Energy*, vol. 7, no. 3, pp. 996–1004, July 2016.