Session-2025-26

Experiential Learning Activity in Lab [10 Marks]

Lab: - Engineering Graphics ; Design Lab (N-ESE103P)

Name of Activity: From Sketch to Solid – Reverse Engineering of a Real Object

The purpose of this activity is to help students understand engineering visualization, measurement, sketching, manual drafting and CAD modelling by selecting an everyday object and converting it into orthographic and isometric drawings.

- **Group No- 6 Year/Semester-First/First Section:-_C__**
- **Name of Student -_____Sakshi Sandel_____ USN No-__CS25169____**

  _____Taniya Sinha_____USN No-___CS25179_____

  _____Twinkle Pawar_____USN No-___CS25183___

1. **Name of object- _____Spanner_____**
2. **Material: -_____Iron_____**
3. **Date of Submission:- 12th Dec 2025_**
4. **Photograph of product-**

5.Orthographic view:-

6.isometric view:-

7.CAD Drawing:-

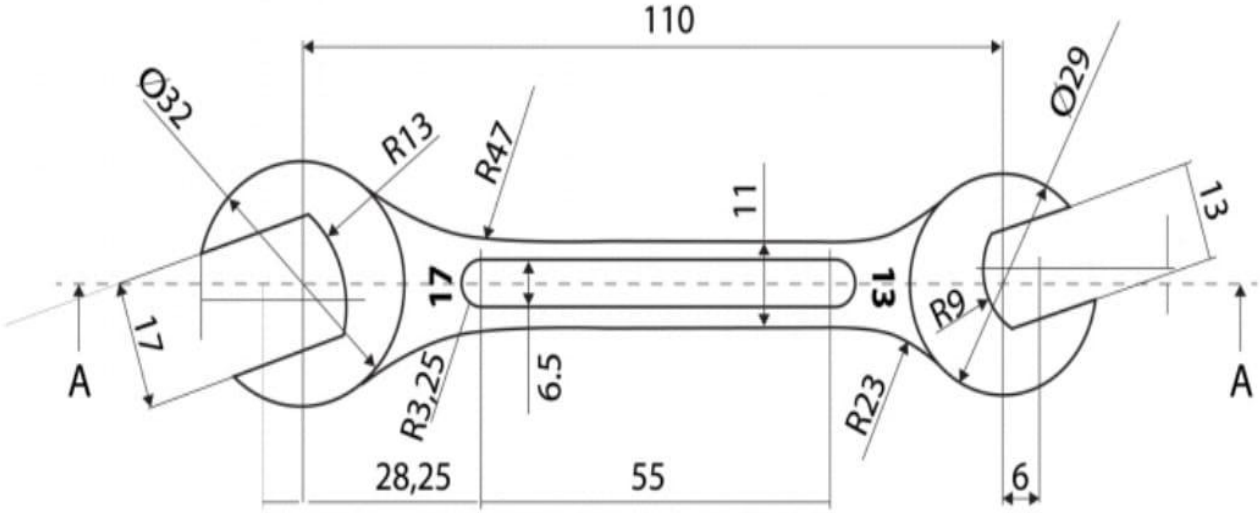

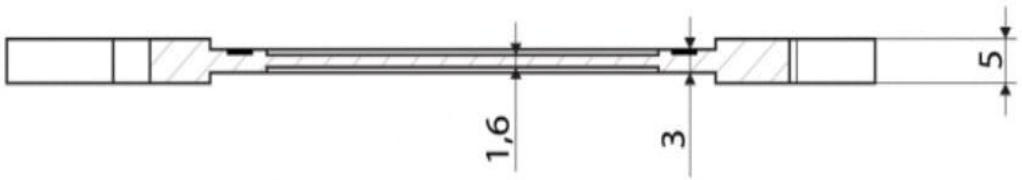

5. **Peer review :- Reviewed by Group No:17**
   The drawing clearly shows good technical understanding and is easy to read. Important dimensions are correctly included making the design functional .With Cleaner dimensioning and clearer jaw and section details, it would look fully professional.

6. **Conclusion -** This activity helped in understanding real-world engineering drawings by starting from a physical object and completing the full workflow , measurement, drafting orthographic and Isometric view, CAD modeling, and evaluation. The experience improved technical communication and visualization skills crucial for future engineering design.

   (This is sample conclusion . Student need to write outcome /understanding of the activity in their own words)

7. **Description of Activity-** Students will work in small groups (3–4 members) :

   - **Step-1. Select an Everyday Object [**Examples: a smartphone stand, door handle, nut & bolt, spanner, or a small mechanical bracket.
   - **Step-2. Measurement [**Take measurements using scales, and other tools.]
   - S**tep-3. Take Photo** of the object (colour) and paste it in the report at space defined.
   - **Step-4.Manual Drawing 2D & 3D [**Draw manual Orthographic projections and Isometric views in the separate sheet and attached its it to the report]
   - **Step-5. CAD Modelling [**Convert manual drawings into a 2D & **3D CAD model** using Auto-CAD or other approved software and attached it to the report in separate sheet.
   - **Step 7: Peer Review** Exchange work with another group for review. Note suggestions and make improvements accordingly and write it in the report.
   - **Step 8: Presentation & Submission [**Present your work with action taken on the feedback and submit it to the teacher for evaluation.]

8. **Learning Outcomes -** By the end of the activity, students will be able to:

   - **Remember**: Recall BIS conventions, symbols, and dimensioning rules.

- **Understand**: Explain the link between 2D drawings and 3D objects.
- **Apply**: Create orthographic projections and isometric drawings of real objects.
- **Analyze**: Identify drawing errors and suggest corrections through peer review.
- **Evaluate**: Compare manual and CAD drawings for accuracy and presentation.
- **Create**: Develop complete set of engineering drawings & CAD models for selected object.

9. Conclusion

This activity helped in understanding real-world engineering drawings by starting from a physical object and completing the full workflow , measurement, drafting orthographic and Isometric view, CAD modeling, and evaluation. The experience improved technical communication and visualization skills crucial for future engineering design.

10.Assessment Rubric (Total: 10 Marks)

- **Group No:- _6__ Year/Semester-First/First Section:-___C____**
- **Name of Student/Roll No-___Sakshi Sandel____ USN No-___CS25169__**

  ___Taniya Sinha____ USN No-____CS25179___

  ___Twinkle Pawar__ USN No-___CS25183__

11. Name of object- ___Spanner___

Component	Criteria	Marks	Marks Awarded		
			USN 1	USN 2	USN 3
Manual Drawings (2D & 3D)	Correctness of views, line conventions, dimensioning, Quality , neatness	3			
CAD Drawings	Completeness, correct features, proper dimensioning, line conventions	3			
Peer Review comments	Comments correctness (line conventions, dimensioning, proportion, missing features).	1			
Presentation/ Viva	Clarity of explanation, understanding of process	3			
Total Marks		**10**			

Faculty Signature: _____

Date: _____