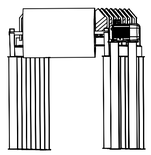

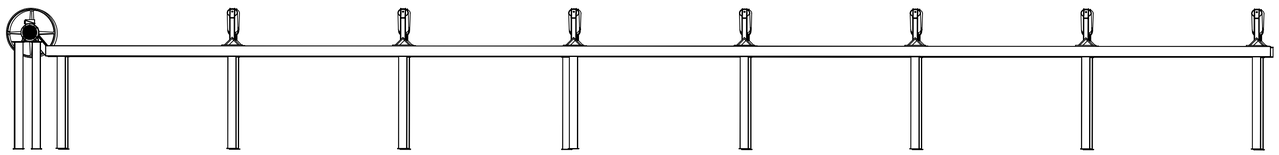

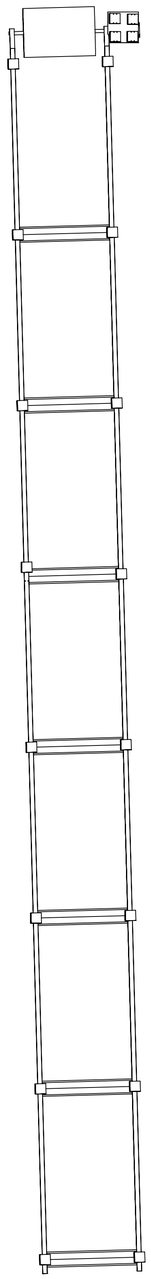

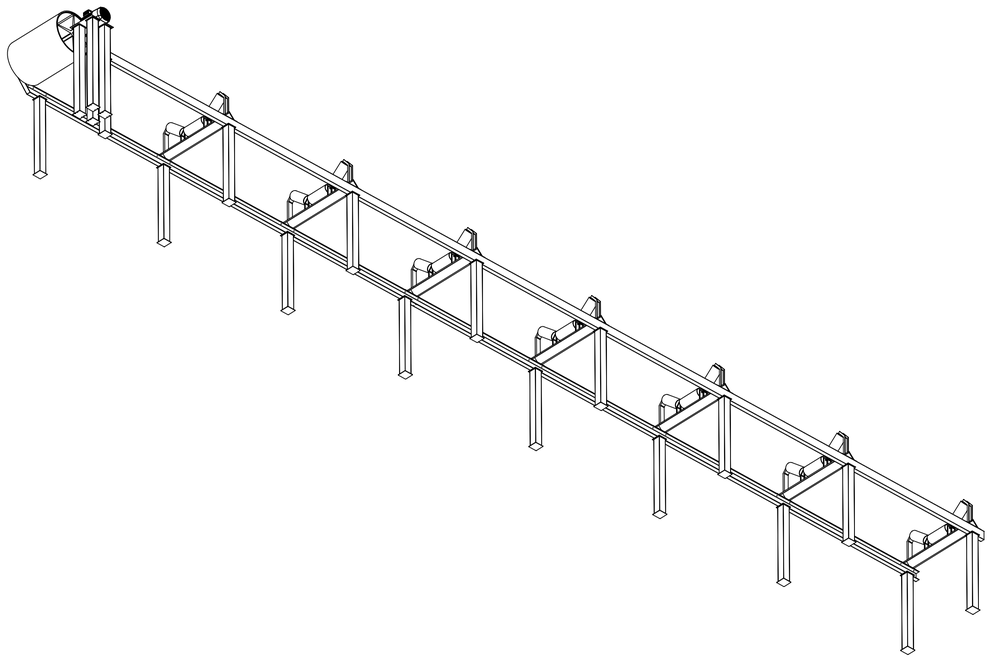

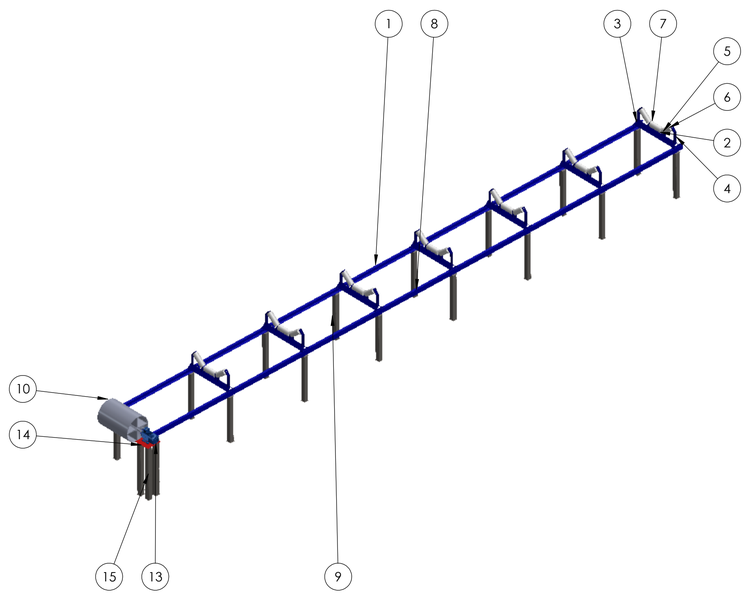

ITEM NO.	PART NUMBER	DESCRIPTION	QTY.
1	C CHANNEL		1
2	HORIZONTAL L PLATE		7
3	C CHANNEL BOLTING PLATE		14
4	SUPPORT 1		14
5	SUPPORT 2		14
6	ROLLER		14
7	ROLLER 2		7
8	C CHANNEL R		1
9	STEEL SUPPORT		16
10	HEAD PULLEY		1
11	PULLEY SUPPORT		1
12	PULLEY SUPPORT 2		1
13	ELECTRIC MOTOR	STEP AP214	1
14	PLATE		1
15	MOTOR SUPPORT		4

DO NOT SCALE DRAWING

REVISION

	NAME	SIGNATURE	DATE

TITLE:

DWG NO. A1

SCALE: 1:30

SHEET 1 OF 1