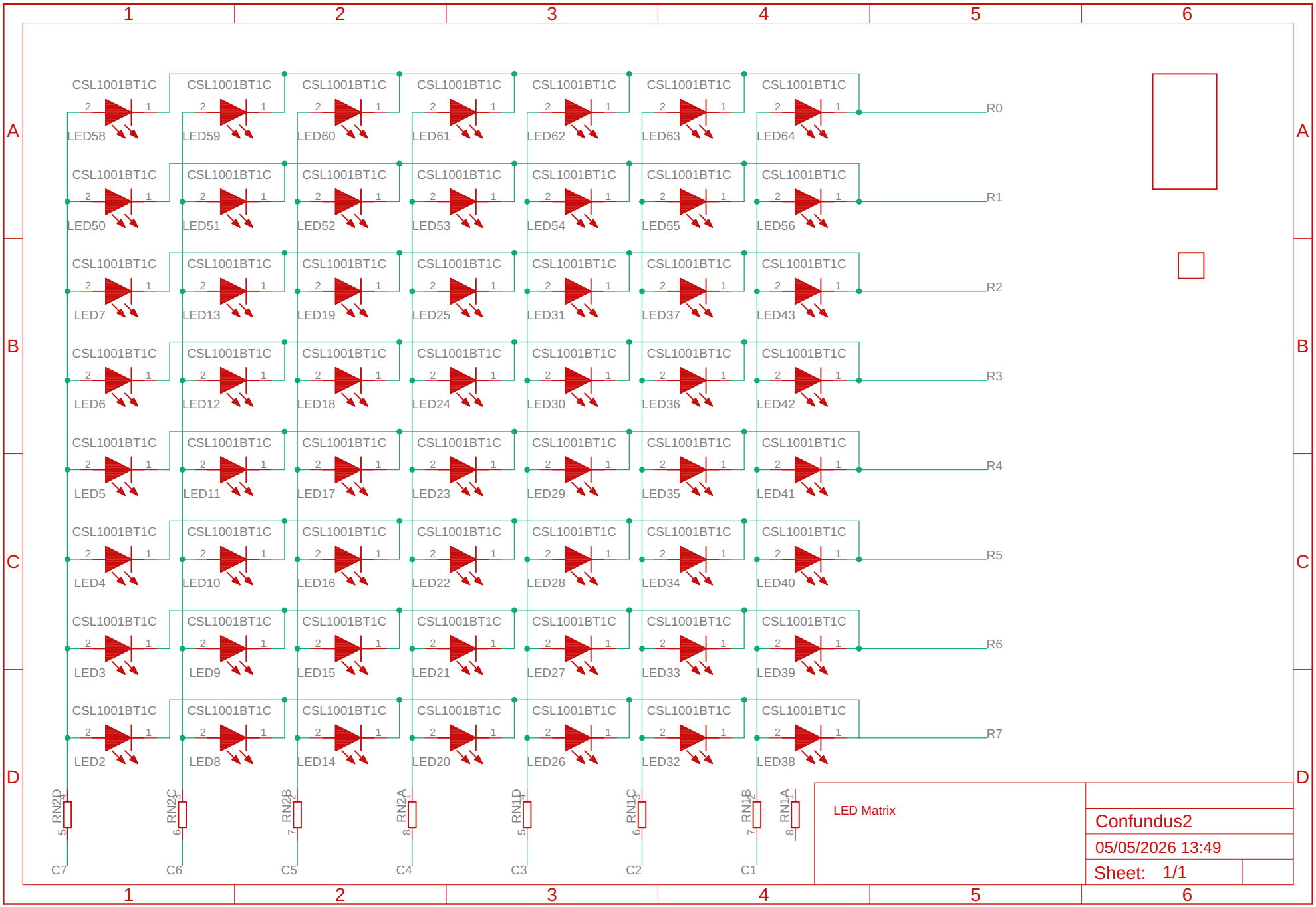
CSL1001BT1C
LED58
LED59
LED60
LED61
LED62
LED63
LED64
LED50
LED51
LED52
LED53
LED54
LED55
LED56
LED7
LED13
LED19
LED25
LED31
LED37
LED43
LED6
LED12
LED18
LED24
LED30
LED36
LED42
LED5
LED11
LED17
LED23
LED29
LED35
LED41
LED4
LED10
LED16
LED22
LED28
LED34
LED40
LED3
LED9
LED15
LED21
LED27
LED33
LED39
LED2
LED8
LED14
LED20
LED26
LED32
LED38
R0
R1
R2
R3
R4
R5
R6
R7
RN2D
RN2C
RN2B
RN2A
RN1D
RN1C
RN1B
RN1A
C7
C6
C5
C4
C3
C2
C1
LED Matrix
Confundus2
05/05/2026 13:49
Sheet: 1/1

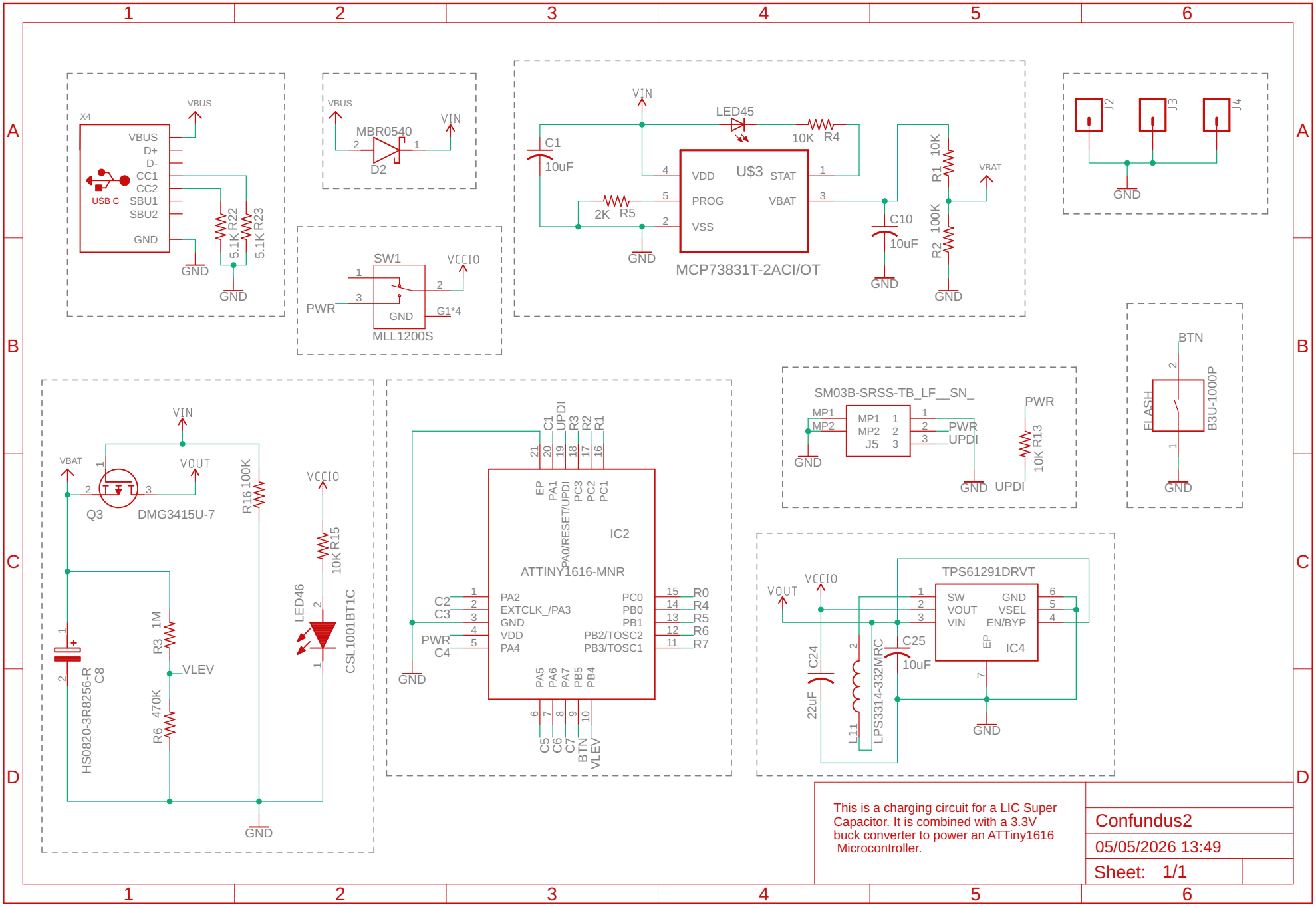

This is a charging circuit for a LIC Super Capacitor. It is combined with a 3.3V buck converter to power an ATTiny1616 Microcontroller.

Confundus2

05/05/2026 13:49

Sheet: 1/1