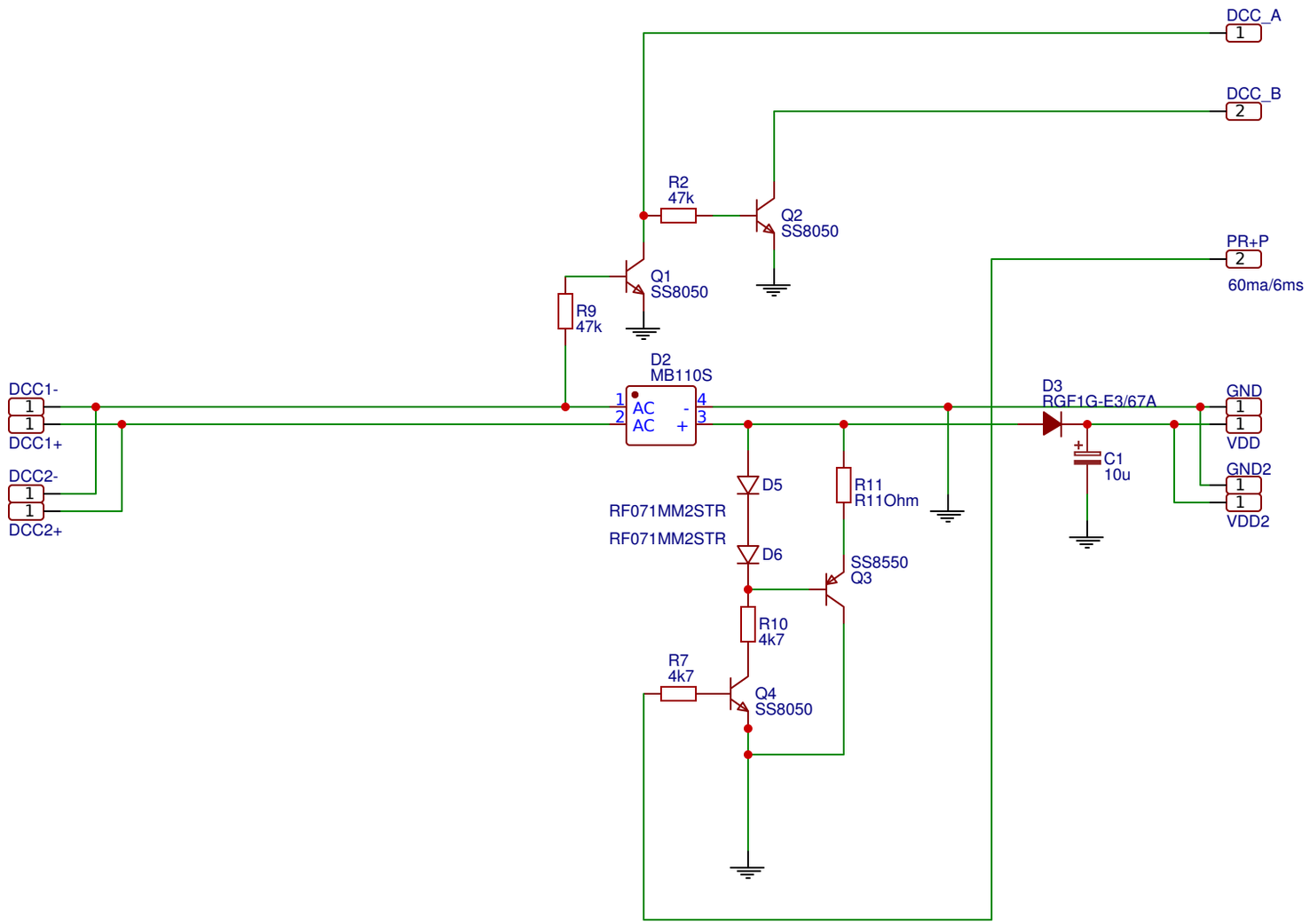

TITLE: DCC Interface		REV: 1.0
	Company: IoTT	Sheet: 1/1
	Date: 2019-03-09 Drawn By: Hans R. Tanner	