SĀVI

Seconds Matter.

The following figure illustrates the hardware model of our proposed system, showcasing the complete end product along with all the technical components integrated within it. Its compact design and efficient detection capability make it a practical and reliable solution.

INITIATED BY TANUSH BHARDWAJ

LEADER AND FOUNDER

BY TEAM GENZIS

HARDWARE DIAGRAM

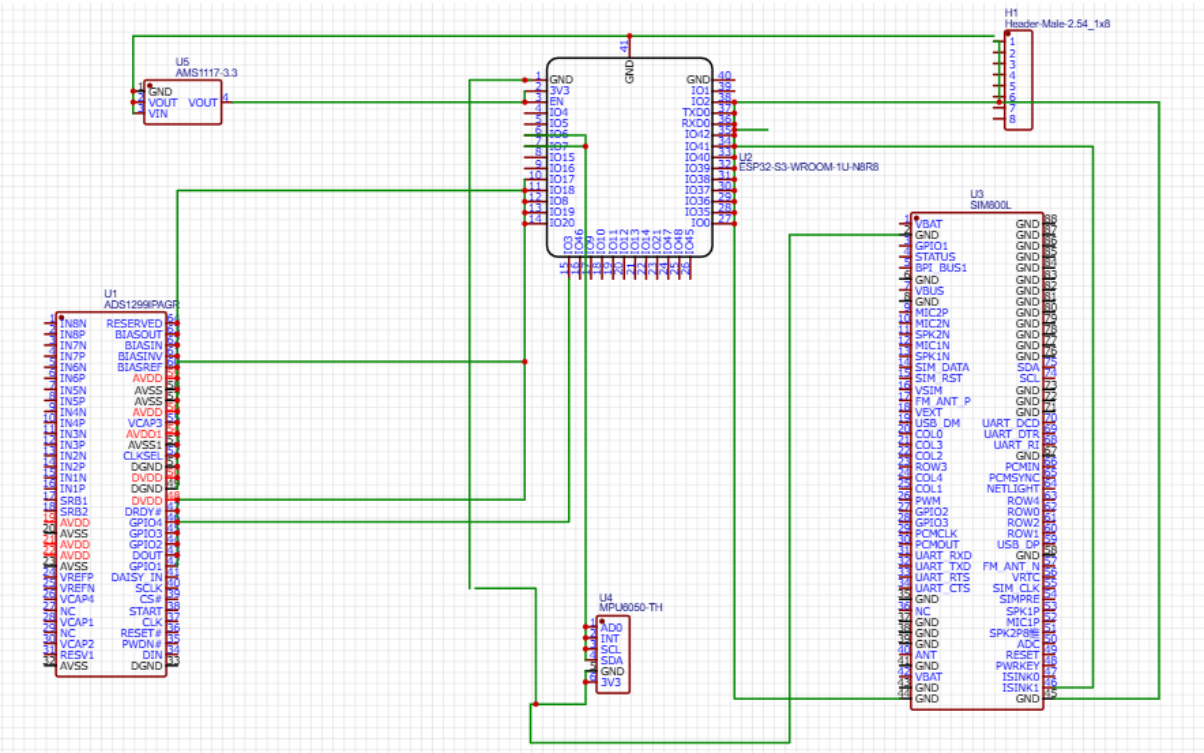

Hardware Overview: How SĀVI Works

The SĀVI system is divided into three main parts: **Capturing the Brain Signal**, **Processing the Data**, and **Safety Alerts**.

1. Capturing Brain Waves (The ADS1299)

- **High Sensitivity:** This chip acts like a "super-ear" for the brain, picking up tiny electrical signals (brain waves) that are usually too small to detect.
- **Noise Cleaning:** It uses special technology to filter out "background noise" (like electrical hum from lights or fans), ensuring the brain data is clean and accurate.

2. The System's "Brain" (The ESP32-S3)

- **Smart Processing:** We use a powerful processor that can run AI models right on the device. This means SĀVI can understand your brain patterns instantly without needing a computer.
- **Fast Communication:** It talks to the sensors at high speeds to make sure there is zero delay between a thought and an action.

3. Safety & Emergency Features

- **Movement Detection:** We added a motion sensor (MPU6050) to tell the difference between a real brain signal and a signal caused by the person just moving their head.
- **Emergency SMS:** If the system detects a critical health event, the built-in GSM module (SIM800L) can send an emergency text message even if there is no Wi-Fi or smartphone nearby.

VISUAL REPRENTATION OF HARDWARE CONNECTION

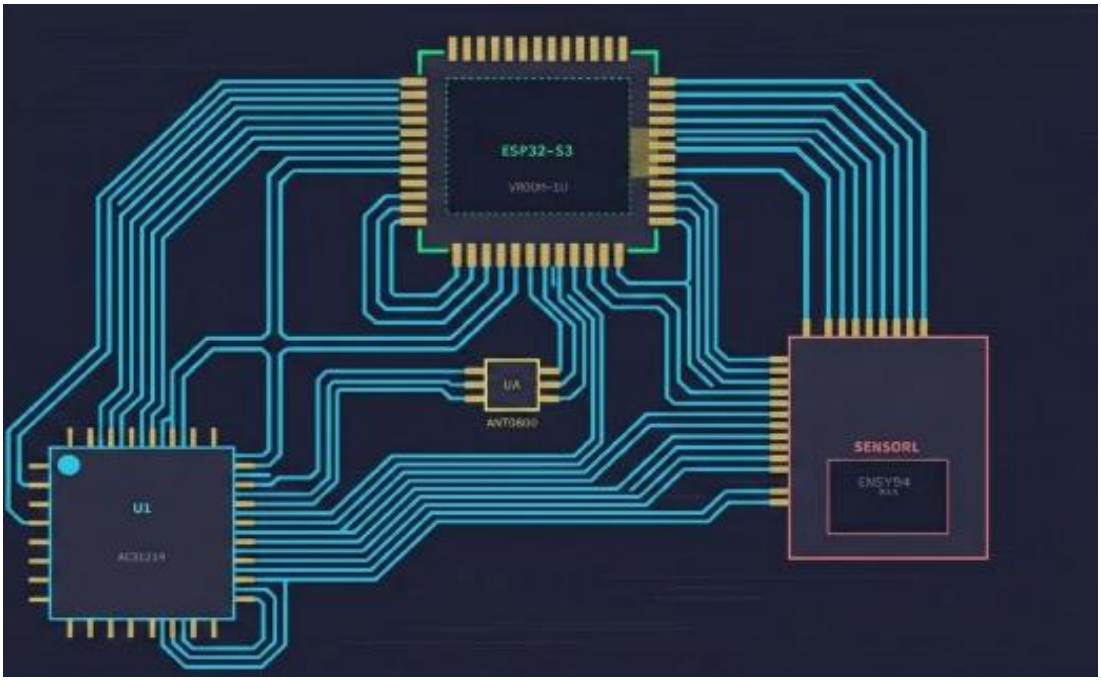

LIST OF HARDWARE COMPONENTS AND THEIR USAGE:

S.No	Hardware Component	Model	Description	Purpose in Project
1	Microcontroller	ESP32-S2	32-bit Wi-Fi enabled microcontroller	Main controller that processes sensor data and manages communication
2	Analog Front-End IC	ADS129R	Low-noise biomedical signal acquisition IC	Captures and amplifies ECG/biomedical signals
3	GSM/GPRS Module	SIM800	Quad-band GSM module	Sends SMS alerts and transmits emergency data
4	Motion Sensor	MPU6050	Accelerometer + Gyroscope module	Detects motion, fall detection, body orientation
5	Voltage Regulator	AMS1117 (3.3V/5V)	Voltage regulation IC	Provides stable voltage to all components
6	Battery	3.7V Li-ion	Rechargeable battery	Powers the complete system
7	Electrodes	ECG Electrodes	Biomedical sensing electrodes	Attached to body for ECG signal acquisition
8	Connecting Wires	Jumper Wires	Male-Male / Male-Female	Used for interconnections
9	PCB	Custom PCB Prototype Board	Circuit mounting platform	Used to assemble components securely
10	SIM Card	Micro SIM	Subscriber Identity Module	Required for GSM network communication
11	Antenna	GSM Antenna	External antenna	Enhances signal strength

SAVI Seconds Matter