Annals of Operations Research (2025) 349:1693–1715
https://doi.org/10.1007/s10479-025-06597-6

ORIGINAL RESEARCH

Black–Litterman portfolio optimization based on GARCH–EVT–Copula and LSTM models

Vu Huynh[1] · Bao Quoc Ta[2,3]

Received: 18 April 2023 / Accepted: 27 March 2025 / Published online: 21 April 2025
© The Author(s), under exclusive licence to Springer Science+Business Media, LLC, part of Springer Nature 2025

Abstract
In constructing diversified portfolios, the investors might be interested in incorporating some quantifiable views or opinions. The Black–Litterman model is a useful approach to integrate investors' views into the Markowitz allocation model. In this paper we utilize a deep learning model to estimate the investors's views and use GARCH–EVT–Copula to model the dependence structure between stock market returns in a large portfolio. The findings show that the Black–Litterman model for portfolio optimization based on GARCH–EVT–Copula and LSTM (Long Short Term Memory) models gives better performances as compared with the traditional max-Sharpe and the original Black–Litterman portfolio problems.

Keywords Black–Litterman model · Portfolio optimization · Copula · GARCH · EVT · LSTM

Mathematics Subject Classification 62H05 · 62P05 · 91G80

1 Introduction

The modern theory of portfolio optimization was first initiated by Harry Markowitz in his pioneering paper (Markowitz, 1952) published in 1952. In this work, Markowitz introduced the mean-variance optimization framework, which laid the foundation for systematic portfolio allocation in the field of financial engineering. This widely used method enables investors to make rational portfolio decisions by effectively balancing the trade-off between risk and return. The modern theory of portfolio optimization provides us with useful methods to find the optimal weights of a portfolio. However, as practical applications evolved, the mean-variance model increasingly revealed its limitations including extreme weight allocations, sensitivity to inputs, increase in computational complexity, and poor out-of-sample

✉ Bao Quoc Ta
baotq@hcmiu.edu.vn

Vu Huynh
vu.huynh@stonybrook.edu

1 Department of Mathematics, Stony Brook University, Stony Brook, NY 11794-3651, USA

2 Department of Mathematics, International University, Ho Chi Minh City, Vietnam

3 Vietnam National University, Ho Chi Minh City, Vietnam

performance, see, e.g., Bera and Park (2008); Best and Grauer (1991); Michaud (1989). Consequently, it has been criticized by both academics and professionals. Moreover, a significant limitation of the mean-variance approach is its reliance on historical data and uniform assumptions about investors' perspectives. This poses a challenge for investors and fund managers in incorporating investors' subject views on underlying assets with allocation methods.

To address this issue, Fischer Black and Robert Litterman proposed the Black–Litterman model (Black & Litterman, 1991, 1992) by employing a Bayesian approach to integrate investors' subjective views into portfolio allocation. This approach mitigates the overreliance on historical data by blending investor views with market equilibrium information to generate more stable and realistic portfolio allocations. In specific, The Black–Litterman model allows investors to combine their subjective views of the expected returns of each stock component with an equilibrium expected return (prior distribution) to form a mixed estimated return (posterior distribution), see, e.g., He and Litterman (2002) for more details. In general, the posterior optimal portfolio weight would be more sensible in reality since investors could flexibly adjust portfolio proportion based on their expectations. Despite these advancements, some challenges remain, such as the assumption of normality in return distributions, which can often leads to suboptimal decision-making and asset allocation. To overcome the challenges of non-normal return distributions, studies by Beach and Orlov (2007) and Deng (2018) have investigated alternative models, including the student's t-distribution. However, these approaches still fall short of fully capturing the asymmetry inherent in return distributions.

One of the most critical challenges in the Black–Litterman model is to estimate investor views accurately. To improve this, various advanced statistical methods have been employed to produce more accurate investor views, such as those in Arisena et al. (2018); Beach and Orlov (2007); Duqi et al. (2014); Sahamkhadam et al. (2022); Ta and Vuong (2020); Teplova et al. (2023), along with fuzzy approaches (Yong et al., 2018) and hybrid approaches that combine GARCH and Support Vector Regression (SVR) (Karaa et al., 2019). Moreover, investors' views are increasingly being derived from the development of machine learning and deep learning models. Empirical results show that these approaches outperform traditional benchmark models, as detailed in Barua and Sharma (2023); Min et al. (2021); Rezaei et al. (2021); Simos et al. (2021); Xing et al. (2018); Yao et al. (2023). It has been proven that advanced statistical models offer powerful tools for modeling multivariate and non-Gaussian distributions of financial assets returns, particularly in capturing the dependence structure of random variables. However, there are still very few studies that integrate advanced statistical models with deep learning techniques within the Black–Litterman framework, particularly for modeling extreme events and capturing the fat tails of financial assets.

Recently, Sahamkhadam et al. (2022) significantly improved the Black–Litterman model by utilizing Copula theory to model the dependency structure between financial assets and forecasting portfolio returns. This approach effectively captures both symmetric and asymmetric tail dependencies among asset components. The empirical results show that their proposed method performs better than the benchmark model. In the financial market, asset returns usually have heavier tails than normal distribution and nonlinear structure. However, the study does not consider a model to capture these properties of returns. In this paper, we extend the work of Sahamkhadam et al. (2022) by introducing an integrated approach that combines advanced statistical techniques and deep learning to enhance portfolio optimization within the Black–Litterman framework. Our key contributions include employing a combined GARCH–EVT–Copula model, enhanced with the Generalized Pareto Distribution, to effectively capture the tail behavior of financial asset returns, which are often characterized by fat-tailed distributions. This enhancement not only addresses the shortcomings of traditional covariance matrix methods, which predominantly rely on historical

data, but also facilitates comprehensive scenario-based modeling. Additionally, we incorporate Long Short-Term Memory (LSTM) networks to dynamically integrate investors' views, capturing complex temporal and non-linear relationships. This integration extends beyond typical price-volume analysis by including fundamental financial metrics and sector-specific variables, significantly improving the model's adaptability to market variations and investor preferences. By generating and analyzing potential future market scenarios, our proposed model provides a robust estimation tool that significantly enhances the efficacy of portfolio optimization. Tested on the top 30 stocks in the Vietnam stock market, our approach demonstrates substantial improvements in managing risk and enhancing returns compared to traditional methods.

The paper is organized as follows: Sect. 2 reviews recent related works, while Sect. 3 presents the methodology including max-Sharpe optimization, the Black–Litterman model, GARCH–EVT–Copula, and LSTM models. Section 4 provides descriptions of the asset data, LSTM architecture, and features for our portfolio. Section 5 presents the computational results and evaluates the performance of the new method in the Vietnam stock market. Finally, the discussion and conclusion are drawn in Sect. 6.

2 Related works

We review some of the key literature on most recent developments of the Black–Litterman framework for portfolio optimization. A notable advantage of the model is its ability to incorporate investors' views, which plays a crucial role in its effectiveness. As a result, accurately forecasting these views is the most critical task when working with the Black–Litterman model. There are two approaches to obtaining accurate views: advanced statistical models and machine learning models.

Advanced statistical models, including traditional econometric models ARMA and GARCH models, are among the most popular methods used to generate investor views. The GARCH type models were first used by Beach and Orlov (2007) to derive views (see also Duqi et al., 2014). The results indicate that the returns on their portfolio outperform those of portfolios based on market equilibrium weights. Arisena et al. (2018) [see also Ta and Vuong (2020)] utilized the integrated ARMA–GARCH model to determine investors' views in the Black–Litterman model, based on the assumption that the time series conditions are met. Harris et al. (2017) extends the Black–Litterman methodology to a dynamic asset allocation framework improve it by incorporating alternative risk measures, such as Value-at-Risk (VaR) and Conditional Value-at-Risk (CVaR), under different distributional assumptions, including normal and t-distributions.The empirical results show that the combined model is effective in generating optimal asset allocation weights. Although most studies extend the Black–Litterman framework to non-Gaussian distributions, primarily Student's t-distributions, their proposed models often fail to capture asymmetries in the return distribution. To overcome this limitation, Copula models are employed to systematically and asymmetrically capture the tail dependency structure of financial returns, which is a critical aspect of financial risk modeling and portfolio optimization problems. Additionally, the data is assumed to follow a specific distribution. For example, Teplova et al. (2023) extend the Black–Litterman approach by using ARMA–GARCH–Copula-based expected returns to generate investor views, rather than relying on financial analysts' views. They incorporate the CVaR metric as a risk measure in the optimization procedure. The copula models incorporating with BL model was also studied by Sahamkhadam et al. (2022) in which copula

models are utilized to estimate the tail dependency structure and covariance matrix. They also use ECM (vector error correction)/VAR (vector autoregressive) model to obtain views. To model multivariate financial time series, Deng (2018) establishes a generalized multivariate Vector Error Correction Model (VECM)/Vector Auto-Regressive (VAR) with Dynamic Conditional Correlation (DCC)/ Asymmetric DCC (ADCC) models [see also Harris et al. (2017)]. These models are then applied to generate objective views, enhancing the practicality of the Black–Litterman model for a six-asset China portfolio. Geyer and Lucivjanska (2016) introduced a new approach for deriving views and their associated uncertainties using predictive regressions estimated within a Bayesian framework. They demonstrated that the uncertainty of views, derived naturally from the predictive regression, led to improved the performance compared to other benchmark models.

Recently, machine learning and deep learning models have developed rapidly and found a wide range of applications in various fields, particularly in financial forecasting and portfolio optimization. These models have also been integrated with the Black–Litterman model to achieve better asset allocation solutions. Pyo and Lee (2018) develop an optimal portfolio strategy that leverages low-risk anomalies within the Black–Litterman framework. They use three machine learning models: Gaussian Process Regression (GPR), Support Vector Regression (SVR), and Artificial Neural Networks (ANN), and GARCH model to predict volatilities and investor views for a Black–Litterman portfolio in South Korean stock market. Xing et al. (2018) propose a a sophisticated approach ECM (Evolving Clustering Method) as a screening mechanism for LSTM to formalize sentiment information into subjective views, which are then applied to the Black–Litterman model. Karaa et al. (2019) propose a hybrid GARCH-SVR model to forecast asset returns. These return forecasts are then used as views in the Black–Litterman model to generate optimized portfolios. Min et al. (2021) implement the Black–Litterman model incorporating investor views generated from various machine learning algorithms, including SVM, Random Forest, XGBoost, and Multi-Layer Perceptron Neural Networks. Rezaei et al. (2021) propose a novel hybrid deep learning model that combines Complete Ensemble Empirical Mode Decomposition (CEEMD), Convolutional Neural Networks (CNN), and LSTM models for stock prediction. They then incorporate these predictions as investor views in the Black–Litterman asset allocation model. Barua and Sharma (2023) consider the Black–Litterman model with investor views derived using a hybrid multivariate Convolutional Neural Network-Bidirectional Long Short-Term Memory (CNN-BiLSTM) model, capturing time variation in the conditional distribution of returns. Their results demonstrate that the CNN-BiLSTM model effectively captures both spatial and temporal patterns in the data, offering improved predictive performance compared to NN, LSTM, BiLSTM, and CNN-LSTM models.

The studies mentioned above primarily highlight the advantages of incorporating either statistical models (such as GARCH types, VAR and Copula) or machine learning, including deep learning, into the Black–Litterman framework. However, most financial data exhibit heavier tails than those of a normal distribution, increasing the likelihood of extreme losses. Extreme Value Theory (EVT) provides a robust framework for modeling the behavior of these extreme events of financial returns. Therefore, this paper aims to enhance the Black–Litterman model for portfolio allocation by leveraging a combination of traditional statistical models GARCH–EVT–Copula with the state-of-the-art deep learning LSTM model.

3 Methodology

3.1 Portfolio optimization

A portfolio is a collection of assets from the financial market, and portfolio optimization refers to the process by which an investor determines the allocation of assets to achieve a specific objective, such as minimizing risk. Optimal portfolio allocation is one of the most critical challenges in financial engineering. The portfolio optimization problem, along with methods to solving it, was first introduced by Markowitz (1952). His method allows investors to construct a portfolio that minimizes risk for a specified level of return.

Given that P_t is the price of an asset at time t, the log-return is defined as $r_t = \log(P_t/P_{t-1})$. Consider an N-dimensional portfolio consisting of asset returns r_{tj} for $i = 1, \ldots, N$, where r_{tj} represents the return of the j-th asset at time t. The expected returns for these assets are denoted by $\mu_{tj} = \mathbb{E}(r_{tj})$. Let $\boldsymbol{\mu}_t = (\mu_{t1}, \ldots, \mu_{tN})$ denote the vector of expected returns, and μ_0 a fixed level of expected return. Additionally, let $\mathbf{w}_t = (w_{t1}, \ldots, w_{tN})$ denote the vector of asset weights in the portfolio. The Markowitz portfolio optimization problem is formulated as follows:

$$\begin{aligned} \underset{\mathbf{w}_t}{\text{minimize}} \ & \mathbf{w}_t^T \Sigma \mathbf{w}_t \\ \text{subject to } & \mathbf{w}_t^T \boldsymbol{\mu}_t = \mu_0 \\ & \mathbf{w}_t^T \mathbf{1} = 1 \\ & w_{tj} \geq 0, \ j = 1, \ldots, N. \end{aligned} \tag{1}$$

where Σ is the covariance matrix of returns and $\mathbf{1} := (1, 1, , \ldots, 1) \in \mathbb{R}^N$.

To evaluate the performance of investment strategies, the most important measure is the Sharpe ratio, introduced by William F. Sharpe in his seminal papers (Sharpe, 1966, 1994). The framework of max Sharpe ratio optimization has been the vital backbone of modern quantitative financial theories that have been utilized by academics and practitioners around the globe. Maximizing the Sharpe ratio for a portfolio can be expressed as follows:

$$\begin{aligned} \max_{w} \quad & \frac{w^T \mu - r_f}{\sqrt{w^T \Sigma w}} \\ \text{s.t.} \quad & \sum_{i=1}^{n} w_i = 1, \\ & Aw \geq b, \\ & w \geq 0. \end{aligned} \tag{2}$$

Assume that no short-selling is allowed. So the weight of each asset will be positive and cannot exceed an amount of alpha. However, solving directly this problem will be a hurdle since the objective function is in the form of a non-linear function, thereby leading to an alternative problem that has been proposed based on this original transformation.

$$\begin{aligned} \max_{y} \quad & y^T \Sigma y \\ \text{s.t.} \quad & \hat{\mu}^T y = 1, \\ & \hat{A} y \geq 0, \\ & y \geq 0, \end{aligned} \tag{3}$$

where $\hat{\mu} = \mu - r_f$ and $\hat{A}$ is the matrix whose element $\hat{a}_{ij} := a_{ij} - b_i$, with a_{ij}, b_i being the element of the original matrix A and a right-hand side element respectively. Solving the alternative will yield an optimal solution y, and by taking a simple transformation such that $w = \frac{y}{\sum_{i=1}^{n} y_i}$ will return optimal solutions to the original optimization problem (2).

3.2 Black–Litteraman model

We consider a portfolio consisting of N assets or securities, whose vector of asset returns r is assumed to be multivariate normally distributed:

$$r \sim N(\mu, \Sigma), \tag{4}$$

where μ is an $N \times 1$ vector of expected returns, Σ is an $N \times N$ covariance matrix. The vector of expected returns μ is not observable, it cannot be determined with certainty. In the Black–Litterman model, the vector of expected returns μ is modeled as a random variable with prior distribution to be normally distributed

$$\mu \sim N(\pi, \tau\Sigma), \tag{5}$$

where π is the best prediction for μ, τ is a scaling parameter, and $\tau\Sigma$ is the scaled covariance matrix which is represented as the uncertainty or error in the accuracy of this prediction. We see that in case $\tau = 0$ then μ is deterministic defined by π, and hence

$$r \sim N(\pi, \Sigma). \tag{6}$$

So the parameter τ can be presented as the confidence in the estimation of the market expected excess returns and π is the market equilibrium or the equilibrium risk premium. Denote δ the risk aversion parameter, ω_m the vector of market portfolio weights, and ω the weights invested in each asset of the portfolio. Then the market equilibrium π is determined by maximizing the utility function

$$U(\omega) = \omega^T r - \frac{\delta}{2}\omega^T \Sigma\omega \tag{7}$$

which is given by $\pi = \delta\Sigma\omega_m$, and the risk aversion is

$$\delta = \frac{SR_m}{\sigma_m}, \tag{8}$$

where SR_m is the Sharpe ratio of the market portfolio. So the Bayesian prior expected returns can be expressed as a normal distribution around the estimates of the equilibrium risk premium π with covariance matrix $\tau\Sigma$. More precisely we have the decomposition

$$\mu = \pi + \epsilon, \tag{9}$$

where ϵ is normally distributed with zero mean and covariance matrix $\tau\Sigma$. The disturbance value ϵ can be seen as the random shocks that derive from the market off with long-run equilibrium.

In the classical portfolio optimization problem, assume that all investors have the same view. One of the most advantages of the Back-Litterman model is that the model allows all investors to have their personal views on the portfolio's assets which creates better portfolios. However, they are not certain about the views. So the investor views can be presented by a matrix P of k views on each of N assets. Denote $Q \in \mathbb{R}^k$ the vector of expected returns

to each of the k views. Assume that the vector return of investor views is assumed to be a multivariate normal distribution and can be expressed by

$$P\mu = Q + \tilde{\epsilon}, \quad \text{where} \quad \tilde{\epsilon} \sim N(0, \Omega) \tag{10}$$

or

$$P\mu \sim N(Q, \Omega), \tag{11}$$

where Ω is a diagonal covariance matrix of the error $\tilde{\epsilon}$ which represents the uncertainty in each view. The inverse Ω^{-1} can be seen as the confidence of investors' views. Estimating parameter Ω in the model is one of the most important and complicated tasks. However, in Black and Litterman (1991, 1992), Black and Litterman did not provide an intuitive method to estimate this parameter. Subsequently, several methods have been proposed by the number of authors to estimate Ω, including He and Litterman (2002); Idzorek (2002); Meucci (2010); Peterson (2012), and Satchell and Scowcroft (2000). The method proposed by He and Litterman (2002) is the most commonly used method, in which the elements ω_{kk} of Ω are estimated by $\tau(p_k \Sigma p_k^T)$, where p_k is the k-th row of matrix P. Thus, the matrix ω is determined as follows

$$\Omega = \text{diag} P(\tau\Sigma)P^T. \tag{12}$$

We see that Ω depends on the weight-on-views scalar τ. In most studies, the value of τ is between 0 and 1.

By applying Bayes' rule with the inputs Q, and Ω we obtain the posterior market model

$$r|Q; \Omega \sim N(\mu_{BL}, \Sigma_{BL}), \tag{13}$$

where

$$\mu_{BL} = [(\tau\Sigma)^{-1} + P^T\Omega^{-1}P]^{-1}[(\tau\Sigma)^{-1}\pi + P^T\Omega Q], \tag{14}$$

and

$$\Sigma_{BL} = \left[(\tau\Sigma)^{-1} + P^T\Omega^{-1}P\right]^{-1}. \tag{15}$$

For a detailed proof of the above result, we refer to Satchell and Scowcroft (2000) in Appendix, and Walters (2008) in Appendix B. From (14), the expected return can be written as

$$\mu_{BL} = \pi + \tau\Sigma P^T\left(\tau P\Sigma P^T + \Omega\right)^{-1}(Q - \pi P).$$

In the Black–Litterman model, we observe that the expected return comprises two components. The first component is the excess return at equilibrium, while the second component accounts for the deviation in investors' views of the N asset portfolio. In special cases, there are no views or if the investor is uncertain about their views, i.e., $\Omega \to \infty$, then we get

$$\mu_{BL} = \pi \quad \text{and} \quad \Sigma_{BL} = \tau\Sigma. \tag{16}$$

3.3 Prediction models

3.3.1 ARMA–GARCH model

Denote $\mathscr{F}_t$ the information set at time t generated by returns. Under the hypothesis of efficient the efficient markets hypothesis, an asset return can be decomposed as follows

$$r_t = \tilde{r}_t + u_t, \tag{17}$$

where the first term $\tilde{r}_t = \mathbb{E}(r_t|\mathscr{F}_{t-1})$ represents the rational expectation of the return, and the second term u_t is called the innovation or random component of the return, it is a random variable with a zero mean and has conditional variance

$$Var(u_t|\mathscr{F}_{t-1}) = Var(r_t|\mathscr{F}_{t-1}) = \sigma_t. \tag{18}$$

The conditional variance of the innovation σ_t is time-varying stochastic. It is called volatility of the return. The innovation $u_t = \sigma_t \epsilon_t$, where ϵ_t are i.i.d random variables with zero mean and variance one, is called standardized residuals. The conditional expected return $\tilde{r}_t$ is often modeled by ARMA(p, q) model, and the volatility σ_t can be modelled by GARCH(L_1, L_2) model, where p, q, and L_1, L_2 are called the number of lagged forecast terms in the models, we refer to Stay (2010) for more detailed treatments of the models. The most common models used to forecast $\tilde{r}_t$, and σ_t are ARMA(1,1) and GARCH(1,1). The full ARMA(1,1)-GARCH(1,1) model is given as follows

$$r_t = \phi_0 + \phi_1 r_{t-1} + \theta_1 u_{t-1} + u_t, \tag{19}$$

$$u_t = \sigma_t \epsilon_t, \tag{20}$$

$$\epsilon_t \sim i.i.d, \tag{21}$$

$$\sigma_t^2 = \omega + \alpha_1 u_{t-1}^2 + \beta_1 \sigma_{t-1}^2, \tag{22}$$

where ϕ_0 is constant, the coefficients satisfy the conditions: $|\phi_1| < 1$, $|\theta_1| < 1$, $\phi + \theta \neq 0$, and $\omega > 0, \alpha_1 \geq 0, \beta_1 \geq 0, \alpha_1 + \beta_1 < 1$.

3.3.2 Copula models

Copula theory offers an effective tool to model the interdependency among random variables, market co-movement, and the tail dependence of assets. Copula models have proved their utility in the finance and insurance realm, especially, in portfolio management and risk modeling. The models have proven useful in comprehending the fluctuations in prices and the co-movements between financial assets, including tail dependence. The theory was first proposed by Sklar (1959). For the details of rigorous mathematical introduction and treatments, we refer to Durante and Sempi (2010); Joe (1997); Nelsen (2006). In Sklar (1959), Sklar proved that for any d-dimensional vector of random variables $(X_1, \ldots, X_d)$ with marginal $F_1, \ldots, F_d$ and joint distribution F, then there exists a d-dimensional copula C such that for all $x_1, \ldots, x_d \in \mathbb{R}$

$$F(x_1, \ldots, x_d) = C(F_1(x_1), \ldots, F_d(x_d)) = C(u_1, \ldots, u_d). \tag{23}$$

where $u_i = F_i(x_i), i = 1, \ldots, d$. It holds that if all margins are continuous, then copula C is determined uniquely, and the converse is also true, i.e., if C is a d-dimensional copula and $F_1, \ldots, F_d$ are distribution functions, then the function F defined in (23) is a multivariate distribution function with margins $F_i, i = 1, \ldots, d$. By putting $x_i = F_i^{-1}(u_i), u_i \in [0, 1], i = 1, \ldots, d$, equation (23) can be written as

$$C(u_1, u_2, \ldots, u_d) = F(F_1^{-1}(u_1), \ldots, F_d^{-1}(u_d)). \tag{24}$$

From equation (24), if F is joint Gaussian distribution ϕ_Σ w.r.t covariance matrix Σ and marginal Gaussian distributions then we obtain the corresponding Gaussian copula denoted $C^G(u_1, \ldots, u_d)$. Similarly, we also obtain student-t Copula $C^t(u_1, \ldots, u_d)$, see, e.g., Joe (1997).

In case, if there exists a single-valued function ψ mapping from $[0, 1]$ to $[0, \infty]$ satisfying strictly decreasing, convex, for which $\psi(1) = 0$, and $\psi(0) = \infty$ such that copula C is represented as follows

$$C(u_1, u_2, \ldots, u_d) = \psi^{-1}(\psi(u_1) + \psi(u_2) + \cdots + \psi(u_d)), \tag{25}$$

then C is said to be Archimedean. The function ψ is called a generator. These copulas have a simple structure and useful properties. They have a wide range of applications in various fields, such as finance, insurance, and financial risk modeling. We refer to McNeil et al. (2015) for more detailed applications of Archimedean copulas in financial risk management. The following table presents some of the most useful families of Archimedean copulas with respect to generator ψ.

Family	Parameter θ	$\psi(t)$
Clayton	$\theta \in (0, \infty)$	$t^{-\theta} - 1$
Frank	$\theta \in (0, \infty)$	$-\log\left(\frac{e^{-\theta t}-1}{e^{-\theta}-1}\right)$
Gumbel	$\theta \in [1, \infty)$	$(-\log(t))^{\theta}$

3.3.3 Extreme value theory

Extreme value theory (EVT) relates to analyzing the asymptotic behavior of uncommon events or the tail regions of a random variable. The theory provides a powerful tool for the statistical modeling of uncommon events or rare events. In practice, Most data in finance and insurance have heavy tails, and, hence, the extreme value approach can be utilized to model the tail distributions of this kind of data. We refer to Karmakar (2017); McNeil et al. (2015); Novak (2012) for more detailed treatments, a rigorous mathematical foundation of EVT, and its applications in Finance and Insurance.

There are two different approaches to identifying extreme events in actual data over a certain time horizon. The first approach involves dividing the time horizon into blocks or periods and analyzing the maximum that the variable takes in each successive period. This approach is called the Block Maxima. However, it is a fact that the conditional variance is not constant over time. So this method is not particularly suitable for financial time series. The second approach is called the peak over threshold (POT) method. It models the exceedances of a given threshold, thereby utilizing data more efficiently which leads to becoming the most suitable method for practical applications, particularly in the financial domain. Mathematically, given a threshold u, the excess distribution function of a random variable X over the threshold u is defined as

$$F_u(y) := \mathbb{P}(X - u \leq y \mid X > u) = \frac{F(y + u) - F(u)}{1 - F(u)}, \tag{26}$$

for all $0 \leq y \leq x_F - u$ where $x_F \leq \infty$ is the right endpoint of distribution function F. According to [31], the limiting distribution of F_u can be approximated by a generalized Pareto distribution (GPD)

$$G_{\xi,\beta}(x) = \begin{cases} 1 - (1 + \xi x/\beta)^{-1/\xi}, & \xi \neq 0 \\ 1 - e^{-x/\beta}, & \xi = 0. \end{cases} \tag{27}$$

where ξ is the shape parameter, and β is the scale parameter. One can observe that F can be presented as a function of the conditional excess distribution F_u

$$F(u+y) = (1 - F(u))F_u(y) + F(u). \tag{28}$$

Assuming n to be the total number of observations and N_u to be the number of observations above the provided threshold u, for $x > u$ we get

$$F(x) = 1 - \frac{N_u}{n}\left(1 + \xi\frac{x-u}{\beta}\right)^{-\frac{1}{\xi}}. \tag{29}$$

3.3.4 Long short-term memory

Long Short-Term Memory (LSTM) is one of the most widely used models in deep learning, initially proposed by Hochreiter and Schmidhuber in 1997 (Hochreiter & Schmidhuber, 1997). This model is a specialized type of recurrent neural network (RNN), designed specifically to overcome the limitations of traditional RNNs in handling long-term dependencies in time series. Traditional RNNs often struggle with issues like vanishing and exploding gradients, which can impair their ability to learn from long-term dependencies in the data. The vanishing gradient problem, in particular, occurs due to the exponential decay of the gradient of the loss function with time, making it challenging for the model to retain information over long sequences. This limitation is critical in applications like financial time series forecasting, where the ability to capture long-term patterns and dependencies is essential.

To overcome these challenges, LSTM models introduce memory cells, which are capable of retaining information over extended periods. These cells use a set of gates-input, forget, and output gates-to control the flow of information, allowing the model to decide what information to keep, update, or discard as it processes the sequence. This architecture enables LSTMs to effectively capture more complex and long-term dependencies in time series data, making them highly suitable for forecasting tasks.

LSTMs have been widely adopted in financial applications, particularly for predicting stock market movements, where asset prices are influenced by a multitude of factors over time. The model's ability to handle sequential data and retain relevant information over long periods makes it an ideal choice for this domain. Recently, the LSTM model is also combined with some econometric models, such as ARIMA to predict financial time series. The structure of the LSTM model can be explained in the Fig. 1 below

The cell state C is the key operation of the LSTM network (the horizontal line at the top of the diagram), which allows the flow of previous information to pass through LSTM unchanged. Therefore, LSTM utilizes cell states to remember information from the past and using it for future predictions. Moreover, the information in the cell state could be updated with a gating regulation consisting of 3 main gates: the forget gate, the input gate, and the output gate. The forget gate f_t decides which information should be retained and which should be forgotten. The decision is made by a sigmoid layer σ defined as follows

$$f_t = \sigma\left(W_f \cdot [h_{t-1}, x_t] + b_f\right), \tag{30}$$

and

$$\sigma(x) = \frac{1}{1+e^{-x}}. \tag{31}$$

From this, we see that the value of the sigmoid function ranges between 0 and 1, it determines how much information should be forgotten. If the result from the sigmoid function is close

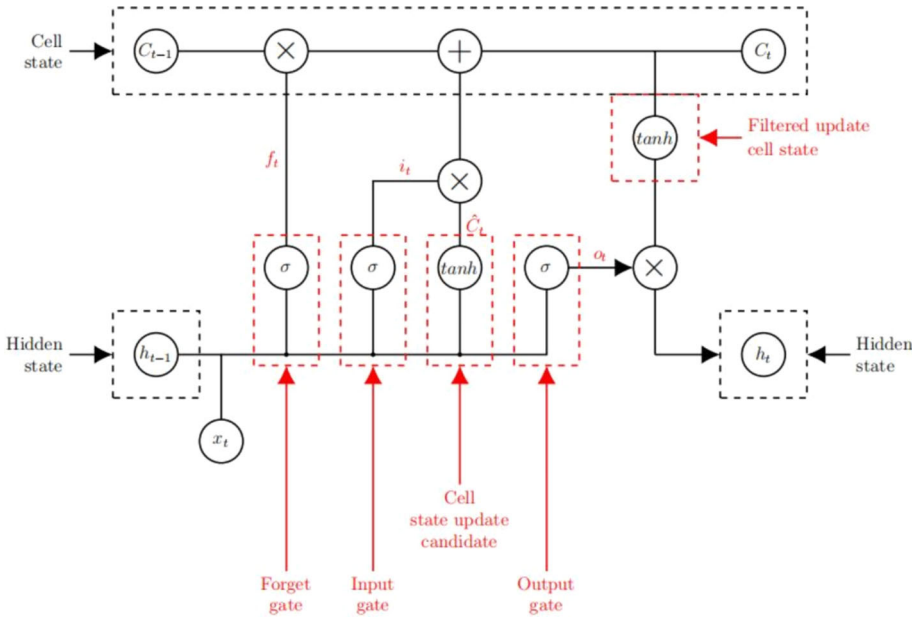

Fig. 1 LSTM recurrent unit

to 1, then all information should be remembered; while if its value is close to 0, then more information should be discarded.

The input gate i_t decides which information will be used to update the cell states by using the sigmoid function σ.

$$i_t = \sigma\left(W_i \cdot [h_{t-1}, x_t] + b_i\right). \tag{32}$$

The last stage is to multiply the results of the input gate and that of the cell state candidate, which only allows important information from the input gate to be added to the current cell state

$$\hat{C}_t = \tanh\left(W_C \cdot [h_{t-1}, x_t] + b_C\right). \tag{33}$$

Hence, the updated cell state is

$$C_t = f_t \odot C_{t-1} + i_t \odot \hat{C}_t, \tag{34}$$

where the operator $\odot$ denotes the Hadamard product. This formula represents the fact that we forgot the old information (through the value of the forget gate) and add new information we decided in the input gate.

Finally, the output gate o_t decides what the output of each cell will be. To be clear, the values of the sigmoid layer would decide appropriate output information by multiplying with that of the current cell state that has been pre-processed with the $tanh$ layer

$$o_t = \sigma\left(W_o \cdot [h_{t-1}, x_t] + b_o\right), \tag{35}$$

$$h_t = o_t \odot \tanh(C_t). \tag{36}$$

3.4 Performance measures

In this paper, we would use the following most common metrics used in portfolio risk management to measure the investment efficiency of the portfolio.
Sharpe ratio: The Sharpe ratio is one of the most common tools to evaluate the performance of the investment. The Sharpe ratio takes into account the expected returns and the risk measure (variance) of the portfolio, which can be shortly explained with the reward given for bearing an amount of risk. The higher the ratio, the better the investment

$$\frac{E[r_p] - r_f}{\sigma_p}, \tag{37}$$

where $E[r_p]$ denotes the expected return of the portfolio, r_f is the risk-free rate, and σ_p is the standard deviation of the portfolio.
Drawdown: Although the portfolio variance has been a longstanding efficient risk metric, other measures should be taken into consideration. A preferred other risk metric used in portfolio risk management is Drawdown. This measure is a gap between the current portfolio value and its peak that was previously reached in the past. The mathematical expression of Drawdown is as follows:

$$D(w, t) = \max_{0 \le \tau \le t} \{w_p(\tau)\} - w_p(t), \tag{38}$$

where $w_p(t) = \sum_{i=1}^{n} w_i r_i(t)$ is the cumulative return of a portfolio and $r_i(t)$ is the cumulative return of asset i up to time t.
Average Drawdown (ADD): Another crucial performance measure or risk factor utilized in assessing investment is the average loss from one local maximum to the next local minimum of investment, see Chekhlov et al. (2005) for more details. The mathematical expression of Average Drawdown is defined as follows

$$ADD = \frac{1}{T} \Sigma_{t=1}^{T} D(w, t). \tag{39}$$

where T is the total number of drawdowns in the entire period.
Max Drawdown: The measure of investment risk known as the maximum drawdown (MDD) is utilized to evaluate the risk associated with a portfolio, for more details, see, Hamelink and Hoesli (2004). More precisely, the maximum drawdown is defined by

$$MDD = \max_{0 \le t \le T} \{D(w, t)\}. \tag{40}$$

The max drawdown is also known as the gap between the highest peak and lowest trough of investment wealth.

3.5 Steps

In this section, we present meticulously step-by-step procedures on how to implement all of the methods presented above. The implementation would update on a recursive rolling window technique in which for each new observation, all steps below would be redone again to find a new set of optimal weights. To be clear, the base train set would start with a length of 36 months and then deduce the optimal weight set to test on the next period (week frequency). After each week, the base train set would be extended with new data points and repeat all steps to give a new weight set. The procedure can be summarized in the following steps:

1. Use ARMA(1,1)-GARCH(1,1) to obtain standardized residuals ϵ $(m \times n)$ from the GARCH model (with m being the length of the train set and n being the number of assets).
2. For each column vector ϵ_i, find the marginal cumulative distribution function. In this step, replace the tail of the original distribution with the Pareto distribution (EVT) and the resulting one is the GNG distribution.
3. Use Copula to find joint distribution function on pseudo observation u (by converting standardized residuals ϵ using marginal CDF).
4. Simulate numerous observations from the cumulative joint distribution function (Copula) and find a new covariance matrix Σ_{Copula} from such simulation.
5. Calculate π from Sect. 2.1 with Σ_{Copula}.
6. Calculate the investor's view vector Q derived from LSTM

$$Q = (Q_1, Q_2, ...Q_n) = (r_{1,t+1}^{LSTM}, r_{2,t+1}^{LSTM}, ..., r_{n,t+1}^{LSTM}). \tag{41}$$

7. Calculate Ω, with $P = I$ and Σ_{Copula}.
8. Estimate posterior distribution μ_{BL} and Σ_{BL}.
9. Obtain optimal weight set from the chosen portfolio optimization method and compare with benchmark portfolio (with no Copula).

4 Data and LSTM feature input

4.1 Data descriptions

We constructed a large portfolio consisting of 30 stocks that have the largest amount of liquidity, transaction volume, and capitalization in the Vietnam stock market. The data collected spans 3 years and 4 months, from January 2019 to April 2022, and is divided into a training set (2 years and 10 months) and a test set (6 months). The training period covers January 3, 2019, to October 1, 2021, while the test period runs from October 2, 2021, until the last day of the dataset, April 1, 2022. The LSTM model follows a recursive rolling approach for training, where the latest data point is added to the training set to predict the next observation.

The selection of this specific period, from January 2019 to April 2022, is strategically justified. Prior to 2019, the Vietnam stock market experienced inconsistent liquidity levels, which could introduce unnecessary volatility and reduce the reliability of predictive models. By starting the analysis in 2019, the dataset reflects a more stable market phase, enhancing the robustness of the study's findings. Moreover, several stocks with substantial liquidity had not yet undergone Initial Public Offerings (IPOs) before 2019, so focusing on this period ensures that the portfolio comprises well-established entities. This period also includes the global COVID-19 pandemic, a time marked by significant market fluctuations and diverse economic events, providing the model with complex data patterns that enhance its learning and predictive capabilities. Thus, the chosen time frame not only captures a stabilized phase of the Vietnam stock market but also includes a critical period of global financial disruption, making the analysis both comprehensive and meaningful (Table 1).

As we can see from the table, most of the skewness statistics is ranging between −0.35 to 0.35. Therefore, the overall distribution of return of these stocks is not substantially skewed distribution but instead acceptable. In contrast, all of the numbers for the kurtosis description is greater than 1, thus indicating fat-tailed distributions. Therefore, the Extreme Value Theory

Table 1 Descriptive statistic

Stock	Min	Max	Mean	Std	Skewness	Kurtosis
HPG	−0.0698925	0.0682432	0.00152789	0.0209806	0.0235243	1.42524
TCB	−0.0699482	0.0694006	0.000812799	0.0201802	−0.232222	2.58697
VPB	−0.0699588	0.0697051	0.00170766	0.0222972	−0.179028	2.07113
VNM	−0.07	0.069719	−0.000238158	0.0150719	0.0630455	4.57802
VIC	−0.0698985	0.0699301	−5.54712e−05	0.0175239	0.285711	4.53995
MBB	−0.069697	0.0692042	0.00131126	0.0195377	−0.37228	2.66917
FPT	−0.0693069	0.069317	0.00184876	0.0172519	−0.131935	3.13815
STB	−0.0694444	0.069863	0.00120339	0.023636	0.0617479	1.49012
VHM	−0.07	0.07	0.000289014	0.0189917	0.132529	3.23558
NVL	−0.0693548	0.0691589	0.00106775	0.0151335	0.645282	4.52738
MSN	−0.0699523	0.0699301	0.000870192	0.0214956	0.275715	1.77408
MWG	−0.0699615	0.0699588	0.00137668	0.019578	−0.303404	3.16799
VCB	−0.0699187	0.0689655	0.00101277	0.017192	−0.0770008	2.43427
CTG	−0.0699482	0.0696721	0.00114422	0.0219824	−0.152367	1.94843
HDB	−0.0697248	0.0695364	0.00113455	0.0211791	0.0733892	2.05573
VJC	−0.07	0.0698113	0.000333935	0.0153697	0.166238	4.3482
TPB	−0.0699746	0.0698448	0.00165081	0.021468	0.105106	2.23997
PNJ	−0.0699708	0.0693642	0.000794577	0.019822	−0.196517	2.47758
SSI	−0.0699301	0.0699588	0.00130306	0.0252391	0.0671045	1.52036
VRE	−0.0697674	0.07	0.000287879	0.0226595	−0.0614688	1.92336
PDR	−0.0682261	0.0698603	0.00224324	0.0191177	0.712056	2.2453
KDH	−0.0694143	0.069697	0.00123179	0.0177806	0.0899154	3.10745
PLX	−0.0698795	0.0698856	7.15422e−05	0.0188638	−0.22679	2.93896
REE	−0.0691906	0.0697987	0.00174258	0.0190544	0.293712	2.44817
GAS	−0.0696774	0.0695238	0.000749816	0.0212054	−0.084989	1.99669
BID	−0.0698869	0.0699708	0.000648595	0.0212625	−0.320308	1.94279
POW	−0.0698448	0.0699797	0.000261197	0.0241798	0.084926	1.43236
CII	−0.0699659	0.0697674	0.000301881	0.026979	0.0678004	1.13874
SBT	−0.0699774	0.0699482	0.000432678	0.0239008	−0.00122295	2.16429
BVH	−0.0699774	0.06974	−0.000202264	0.0223907	−0.059723	1.83642
SBT	−0.069977	0.069948	0.000433	0.023901	−0.001223	2.164290
BVH	−0.069977	0.069740	−0.000202	0.022391	−0.059723	1.836416

with Generalized Pareto Distribution is considered to be a feasible option for processing distribution for Copula inputs, and thus a more precise covariance matrix.

4.2 LSTM feature input and architecture

The collected data contains two main parts: stock prices and fundamental data from each company's financial statement. To be clear, both of these kinds would be transformed into data that has stationary properties before inputting into LSTM. The transformation strictly follows procedures from [1]. The input data is processed into 33 main features, categorized into

price-volume-derived features, fundamental-derived features, and industry-specific dummy variables. These are summarized in the table below.

The rationale for selecting these features is based on the need for a comprehensive representation of the market dynamics. While traditional approaches often rely solely on price-volume-derived features, such as moving averages and momentum indicators, this may not be sufficient for accurate predictions. Price-volume features capture short-term market behavior but may miss underlying fundamental trends and sector-specific influences that are critical for long-term predictions. Incorporating fundamental features, such as the Debt-to-Asset ratio, Return on Equity, and Book-Equity-to-Market-Equity ratio, allows the model to consider a company's financial health and operational efficiency, which are vital for assessing long-term value and performance. These features help the LSTM model learn from a broader set of financial indicators, making it more adaptable to changes in market conditions.

Additionally, the inclusion of industry-specific dummy variables, such as Retail, Real Estate, and Banking, adds another layer of predictive power. These variables enable the model to account for sectoral differences that could significantly impact stock performance. For example, the behavior of stocks in the Real Estate sector may differ from those in the Technology sector due to varying economic cycles and regulatory environments. By considering these industry features, the model can make more accurate predictions by understanding the specific dynamics of each sector. As a result, this newly comprehensive approach enhances the model's ability to adapt to the complexities and nuances of the Vietnam stock market. Therefore, the final model chosen for this study is the LSTM model, which is well-suited to handle the diverse and complex features included in this analysis, ultimately contributing to more robust and insightful prediction (Table 2).

Moreover, the summary of the architecture of LSTM is as follows (Table 3).

To be clear, we would employ the LSTM model that has 4 hidden layers with 50 nodes and 30-time steps. Moreover, the input layers have a three-dimensional shape, with n_{day} being the number of training inputs, 23 being the number of features and 30 being the number of time steps. These parameters were carefully selected through a combination of theoretical insights and empirical validation.

The choice of 4 hidden layers in the LSTM model balances the need to capture complex temporal dependencies with computational efficiency. Adding more layers could increase learning capacity, but beyond four, the benefits diminish while complexity and computational cost rise. Using 50 nodes per layer maintains a balance between model capacity and the risk of overfitting. Too few nodes could limit the model's ability to capture patterns, while too many might cause it to overfit. Therefore, using 50 nodes provides sufficient learning capacity while enabling the model to generalize effectively. The 30-time steps (equivalent to one month) provide sufficient historical context for accurate predictions. While longer sequences could offer additional context, this paper focuses on prioritizing methods and data features that most effectively enhance the model's predictive performance. Therefore, these configurations are chosen to capture sufficient historical data while maintaining computational efficiency.

To avoid the overfitting problem, a 50% Dropout layer would be also applied between each hidden layer. To explain, using a dropout rate that is too high (e.g., 70% or higher) could lead to underfitting, where the model might lose too much information in each forward pass, preventing it from capturing the data's complexity. Conversely, using a dropout rate that is too low (e.g., 20%) might not provide sufficient regularization, allowing the model to overfit the training data (Zaremba et al., 2015). Therefore, a 50% dropout rate is considered optimal in many scenarios because it aggressively reduces overfitting while still allowing the network to learn sufficiently (Srivastava et al., 2014 and Hinton et al., 2012). Finally, the output of LSTM would be the predicted return of the next day.

Table 2 Feature summary table

Feature Type	Feature Name
Price-Volume	3-day Return Moving Average
	5-day Return Moving Average
	12-day Return Exponential Moving Average
	26-day Return Exponential Moving Average
	Return Moving Average Convergence Divergence (MACD)
	5-day Momentum
	1-day Rate of Change of Volume
	1-day Lagged Return
	1-year Reversal
	1-month Reversal
	1-year Relative Strength
	1-day Return Standard Deviation
Fundamental	Debt-to-Asset ratio
	Asset Turn Over
	Return on Asset
	Return on Equity
	Size (Capitalization)
	Book-Equity-to-Market-Equity ratio
	Sales-to-Equity ratio
	Monthly Share Turnover
	Quarterly Share Turnover
	Yearly Share Turnover
Sector	Retail
(Dummy Variable)	Real Estate
	Security
	Industrial Services
	Household Goods and Services
	Chemistry
	Bank
	Food and Beverage
	Utility
	Fundamental Resources
	Material and Construction

5 Empirical results

This section focuses on comparing the performance of three key models: Copula–Black–Litterman (CBL), the Black–Litterman model (BL), and the traditional model (without BL or Copula). For the BL portfolio, the objective is to determine how incorporating investor views generated by the LSTM model enhances portfolio performance. Specifically, we evaluate whether integrating the investor's view using the BL method leads to improved portfolio returns. Furthermore, by upgrading the BL model with the GARCH–EVT–Copula, as

Table 3 Summary of LSTM architecture

Layer	Shape
Input	(n_{day}, 23, 30)
Hidden 1	(none, 30, 50)
Dropout 1	(none, 30, 50)
Hidden 2	(none, 30, 50)
Dropout 2	(none, 30, 50)
Hidden 3	(none, 30, 50)
Dropout 3	(none, 30, 50)
Hidden 4	(none, 30, 50)
Dropout 4	(none, 30, 50)
Output	(none, 1)

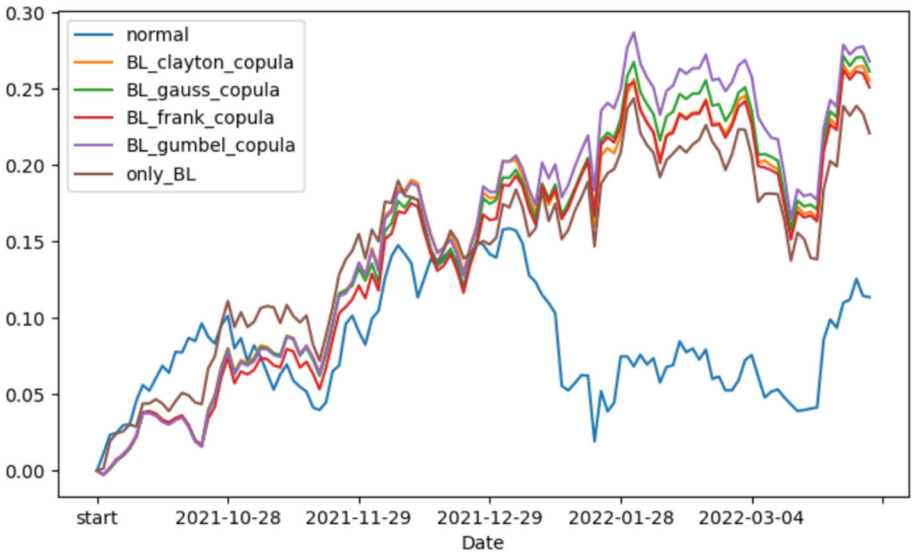

Fig. 2 Cumulative return of all methods

implemented in the CBL method, we investigate whether this approach not only improves performance but also reduces overall risk.

We also use two market indices as benchmarks for comparison: the VN30, which includes the same top 30 companies in our portfolio with the highest liquidity, and the VNINDEX, representing the entire Vietnam stock market index. The analysis of these methods is detailed below, with their respective mean return vectors and covariance matrices serving as inputs for the max-Sharpe optimization (2). Additionally, the daily optimal weight set is updated using a recursive rolling window procedure. This analysis highlights the added value of the CBL and BL methods compared to the traditional approach, showing the clear benefits of the hybrid models, with benchmarking against the VN30 and VNINDEX indices.

In this paper, there are 3 main hyper-parameters that are the confidence level, τ, and δ. Those parameters would be conventionally set at 90%, 0.01, and 2.5 respectively. The results prove that the CBL itself is superior to the traditional method (Fig. 2).

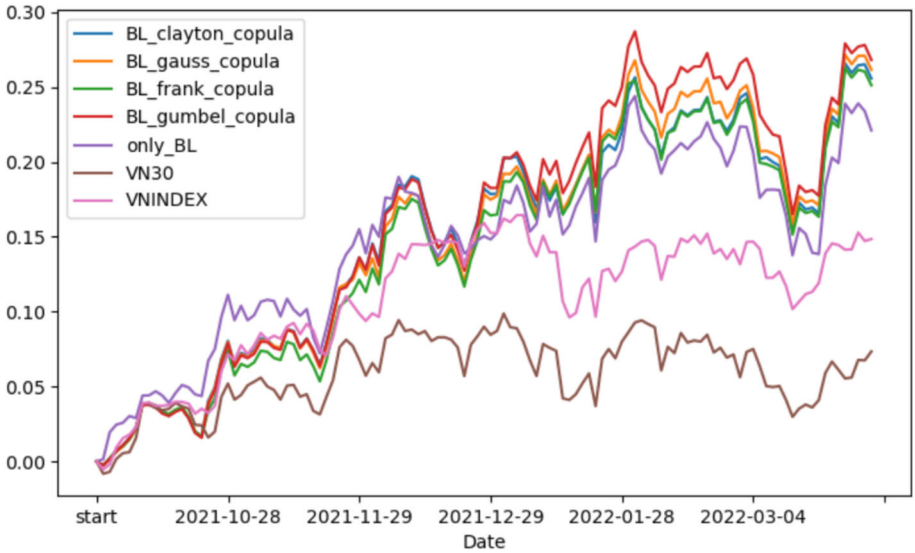

Fig. 3 Cumulative return of all methods

As we can clearly see from the figure, the performance of the Copula–Black–Litterman (CBL) portfolio is far much better than that of the base method. While the base method only uses historical returns to estimate the input, the new method utilizes the Bayesian framework to integrate investor views that are derived from sophisticated LSTMs into the model. Therefore, with correct views and predictions, the asset allocation process from new methods seems to be far more outstanding than that of the traditional method. Also, the improvement from the GARCH–EVT–Copula is noticeable. We see that while the cumulative return of the only-BL portfolio is hanging around 22%, that of CBLs is all over 25%. In short, GARCH–EVT–COPULA might upgrade the performance of the Black–Litterman method. Moreover, the outstanding performance of the CBL could be further confirmed when compared with that of the market. To be clear, the cumulative return of VNINDEX and VN30INDEX are also used for reference (Fig. 3).

The performance of the new methods is much higher than that of the market. While the cumulative return of CBL portfolios nearly reaches a level of 30%, that of the market and VN30 only experience a rise of 15% and 7% respectively. In short, the performance of these portfolios was nearly 2 times higher than that of the market. Even though the CBL portfolio and VN30 are constructed from the same basket of stocks, the payoff for the former is nearly 4 times higher than that of the latter. The last figure below would summarize the performance of all methods (Fig. 4).

In the meantime, according to the graph, it is undeniable that the GARCH–EVT–COPULA portfolios have the best performance compared to others. Moreover, it should also be noticed that although the performance of the traditional is slightly better than that of VN30, it still unperformed the market with a gap of nearly 5%. Having a closer look at the graph, during the first 3 months, the cumulative return of the traditional method moved and rose closely with that of the CBL portfolio. However, it is in the last 3 months that the base method experienced a sharp drop of over 10% to nearly 3%, which might be an indication of weight extremeness. In another word, the traditional portfolio might allocate too many resources to a minor group of specific sectors or stocks, which causes a sudden drop during 1 month. In contrast, the

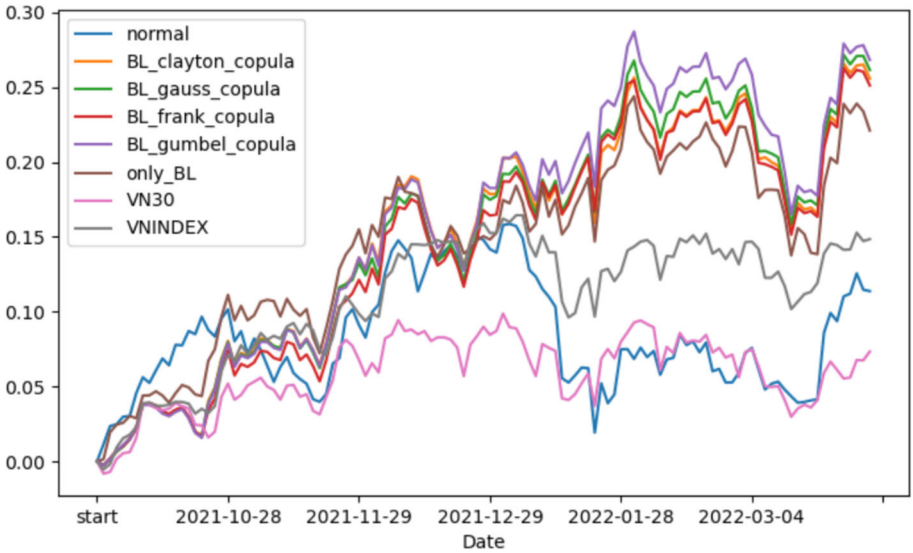

Fig. 4 Cumulative return of all methods

Table 4 Sharpe ratio, average drawdown, and max drawdown calculated using different methods

	Sharpe ratio	Average drawdown	Max drawdown
Normal max-Sharpe	1.303733	0.046291	0.139407
BL Clayton Copula	2.639797	0.018943	**0.102728**
BL Gaussian Copula	2.693799	0.018802	0.109441
BL Frank Copula	2.662382	**0.018195**	0.103032
BL Gumbel Copula	**2.72374**	0.020278	0.12207
BL only	2.278067	0.022997	0.106335

portfolios integrated with investor views are less prone to such extreme events. In particular, the cumulative return of these portfolios experienced a stable upward trend during the whole out-of-sample period.

To evaluate the efficiency, the performance metrics would be calculated for all methods. The results are shown in the following Table 4.

Indeed, the Black–Litterman (BL) model itself performs significantly better than the traditional max-Sharpe method, with a Sharpe ratio gap of nearly 1. This improved performance can be attributed in part to the incorporation of investor views through the LSTM model. The predictions from the LSTM contribute substantially to the remarkable performance of the BL method, as they help the portfolio avoid sudden losses, particularly during the volatile early months of 2022, while maintaining an upward trend until the end of the period.

Moreover, the results clearly show that the GARCH–EVT–Copula methods further enhance portfolio performance. The portfolios using Copula models (Clayton, Gaussian, Frank, and Gumbel) consistently achieve higher Sharpe ratios compared to both the traditional and BL-only models, indicating better risk-adjusted returns. The integration of these advanced statistical techniques not only helps the portfolio achieve higher returns but also

significantly reduces risk. This is reflected in the lower average and maximum drawdowns across the CBL methods compared to the traditional approach.

The max drawdown for all BL and CBL models remains under 2%, compared to 4.6% for the traditional max-Sharpe method, demonstrating that the GARCH–EVT–Copula methods are particularly effective in limiting downside risk. Additionally, the fact that all BL-based methods exhibit higher Sharpe ratios clearly underscores the value of incorporating investor views through the LSTM model. These views, when integrated into the BL framework, help improve the portfolio's performance by enhancing its ability to adjust to market conditions dynamically, leading to superior risk-adjusted returns.

As a result, the combination of the Black–Litterman model with the GARCH–EVT–Copula (CBL) models demonstrates a significant improvement in performance, offering higher returns with lower risk. This highlights the strength of using both the investor's views from the LSTM model and the advanced Copula-based techniques to create a more efficient, less risky, and stable portfolio compared to relying solely on historical returns.

6 Discussion and conclusion

6.1 Discussion

The methodologies implemented in this study, particularly the integration of the Black–Litterman (BL) framework, GARCH–EVT–Copula models, and LSTM, were designed to enhance portfolio performance across a range of market conditions. By selecting the period from 2019 to 2022, this study encompasses a range of market environments, including pre-COVID stability, the volatility during the pandemic, and the recovery phrase period post-COVID. This broad scope offers a comprehensive testing ground, ensuring that the model's performance holds across varying market conditions. However, it is important to consider that the Vietnam stock market, with its distinct liquidity patterns and regulatory environment, may have unique characteristics that could impact the model's applicability and effectiveness in other markets. Therefore, further testing is necessary to confirm the model's effectiveness in different financial markets, especially in larger or more mature ones.

Additionally, while the LSTM model effectively incorporates forward-looking investor sentiment, relying solely on historical patterns to predict future behavior presents potential limitations. The assumption that investor behavior will continue to follow historical trends may not hold true in cases of unprecedented market shifts. Despite these considerations, the GARCH–EVT–Copula model has demonstrated effectiveness in capturing tail risk and managing extreme market events. When combined with the flexibility of the Black–Litterman framework and the forward-looking nature of the LSTM model, it significantly enhances the portfolio's ability to adapt to dynamic conditions and manage risk effectively.

6.2 Conclusion

This study addresses the significant gaps in traditional portfolio optimization methods by strategically employing advanced statistical techniques and deep learning within the Black–Litterman framework. The first major innovation is the integration of the GARCH–EVT–Copula model, which significantly advances our ability to model the joint distribution and the dependency structure of asset returns. Specifically, the Copula model adeptly identifies and captures both symmetric and asymmetric tail dependencies, and modeling extreme events,

which are often missed by traditional methods. This capability is critical as it helps to uncover the complex interactions among asset returns that conventional covariance matrices fail to detect. The refined covariance matrix generated by Copula approach captures not only hidden risk factors but also tail dependencies and intricate asset interactions, thereby furnishing a more robust foundation for portfolio management.

Second, the incorporation of Long Short-Term Memory (LSTM) networks enables dynamic forecasting of returns, effectively incorporating updated investor views into portfolio adjustments. These networks efficiently incorporate updated investor views, capturing complex relationships in market data through advanced analysis of fundamental financial metrics and sector-specific variables. To sum up, this paper utilizes Long Short-Term Memory (LSTM) networks integrating with the GARCH–EVT–Copula to forecast returns for the upcoming period. These predictions are then employed to adjust the portfolio ensuring that portfolio adjustments are both timely and reflective of the latest market insights.

To empirically validate the effectiveness of our methodology, we conducted extensive testing on a diversified portfolio comprising the top 30 stocks in the Vietnam stock market. The results from these tests are compelling: the Black–Litterman portfolio optimization, which integrates our GARCH–EVT–Copula model with LSTM, consistently outperforms both the classical Black–Litterman model and broader market indices. Specifically, it shows superior performance metrics, such as a higher Sharpe ratio, lower average drawdown, and reduced maximum drawdown, thereby demonstrating its effectiveness in enhancing portfolio returns while managing risks more effectively.

Acknowledgements The authors would like to express their gratitude to the anonymous reviewers for their careful reading, constructive remarks and valuable comments, which have significantly contributed to the improvement of this paper. Part of this work was carried out during the second author's visit to the Vietnam Institute for Advanced Study in Mathematics (VIASM). He gratefully acknowledges the support and hospitality provided by VIASM.

Declarations

Conflict of interest The authors declare no conflict of interest.

References

Arisena, A., Noviyanti, S. A., & Zanbar, L. (2018). Portfolio return using Black–Litterman single view model with ARMA–GARCH and Treynor Black model. *Journal of Physics: Conference Series, 974*(1), 12023.

Barua, R., & Sharma, A. K. (2023). Dynamic Black–Litterman portfolios with views derived via CNN-BiLSTM predictions. *Finance Research Letters, 49*, 103111.

Beach, S., & Orlov, A. (2007). An application of the Black–Litterman model with EGARCH-M-derived views for international portfolio management. *Financial Markets and Portfolio Management, 21*, 147–166.

Bera, A. K., & Park, S. Y. (2008). Optimal portfolio diversifcation using the maximum entropy principle. *Econometric Reviews, 27*(4–6), 484–512.

Best, M. J., & Grauer, R. R. (1991). On the sensitivity of mean-variance-efcient portfolios to changes in asset means: Some analytical and computational results. *The Review of Financial Studies, 4*(2), 315–342.

Black, F., & Litterman, R. (1991). Asset allocation: Combining investor views with market equilibrium. *The Journal of Fixed Income, 1*(2):7.

Black, F., & Litterman, R. (1992). Global portfolio optimization. *Financial Analysts Journal, 48*(5), 28–43.

Chekhlov, S., Uryasev, A., & Zabarankin, M. (2005). Drawdown measure in portfolio optimization. *International Journal of Theoretical and Applied Finance, 08*(1), 13–58.

Deng, Q. (2018). A generalized VECM/VAR-DCC/ADCC framework and its application in the Black–Litterman model: Illustrated with a china portfolio. *China Finance Review International, 8*, 453–467.

Duqi, A., Franci, L., & Torluccio, G. (2014). The Black–Litterman model: The definition of views based on volatility forecasts. *Applied Financial Economics, 24*(19), 1285–1296.

Durante, F., & Sempi, C. (2010). Copula theory: An introduction. Lecture Notes in StatisticsIn P. Jaworski, F. Durante, W. Härdle, & T. Rychlik (Eds.), *Copula theory and its applications* (Vol. 198, pp. 3–31). Springer: Heidelberg.

Geyer, A., & Lucivjanska, K. (2016). The Black–Litterman approach and views from predictive regressions: Theory and implementation. *The Journal of Portfolio Management, 42*(4), 38–48.

Hamelink, F., & Hoesli, M. (2004). Maximum drawdown and the allocation to real estate. *Journal of Property Research, 21*(1), 5–29.

Harris, R. D., Stoja, E., & Tan, L. (2017). The dynamic Black–Litterman approach to asset allocation. *European Journal of Operational Research, 259*(3), 1085–1096.

He, G L., & Litterman, R. (2002). The intuition behind Black–Litterman model portfolios. *Available at SSRN:* https://ssrn.com/abstract=334304

Hinton, G., Srivastava, N., Krizhevsky, A., Sutskever, I., & Salakhutdinov, R. (2012). Dropout: A simple way to prevent neural networks from overfitting. arXiv preprint arXiv:1207.0580

Hochreiter, S., & Schmidhuber, J. (1997). Long short-term memory. *Neural Computation, 9*, 1735–1780.

Idzorek, M. (2002). A step-by-step guide to the Black–Litterman model. *Forecasting Expected Returns in the Financial Markets, 17*, 1–32.

Joe, H. (1997). *Multivariate models and dependence concepts*. London: Chapman & Hall.

Karaa, M., Ulucanb, A., & Atici, K. (2019). A hybrid approach for generating investor views in Black–Litterman model. *Expert Systems with Applications, 128*, 256–270.

Karmakar, M. (2017). Dependence structure and portfolio risk in Indian foreign exchange market: A GARCH-EVT-Copula approach. *The Quarterly Review of Economics and Finance, 64*, 275–291.

Markowitz, H. (1952). Portfolio selection. *The Journal of Finance, 7*(1), 77–91.

McNeil, A. J., Frey, R., & Embrechts, P. (2015). *Quantitative risk management: Concepts, techniques and tools*. Princeton University Press, Princeton, NJ.

Meucci, A. (2010). *The Black–Litterman approach: Original model and extensions*. The Encyclopedia of Quantitative Finance. Wiley.

Michaud, R. (1989). The Markowitz optimization enigma: Is 'optimized' optimal? *Financial Analysts Journal, 45*(1), 31–42.

Min, L., Dong, J., Liu, D., & Kong, X. (2021). A Black–Litterman portfolio selection model with investor opinions generating from machine learning algorithms. *Engineering Letters, 29*(2), 710–721.

MSCI Barra: Barra risk model handbook (2007).

Nelsen, R. B. (2006). *An introduction to copulas, , second edition*. Springer, New York

Novak, S. (2012). *Extreme value methods with applications to finance*. Amsterdam: CRC Press.

Peterson, S. (2012). *Investment theory and risk management*. Wiley Finance: Wiley.

Pickands, J. (1975). Statistical inference using extreme order statistics. *The Annals of Statistics, 3*(1), 119–131.

Pyo, S., & Lee, J. (2018). Exploiting the low-risk anomaly using machine learning to enhance the Black–Litterman framework: Evidence from South Korea. *Pacific-Basin Finance Journal, 51*, 1–12.

Rezaei, H., Faaljou, H., & Mansourfar, G. (2021). Intelligent asset allocation using predictions of deep frequency decomposition. *Expert Systems with Applications, 186*, 115715.

Sahamkhadam, M., Stephan, A., & Ostermark, R. (2022). Copula-based Black–Litterman portfolio optimization. *European Journal of Operational Research, 297*(3), 1055–1070.

Satchell, A., & Scowcroft, S. (2000). A demystification of the Black–Litterman model: Managing quantitative and traditional portfolio construction. *Journal of Asset Management, 1*, 138–150.

Sharpe, W. F. (1966). Mutual fund performance. *The Journal of Business, 39*(1), 119–138.

Sharpe, W. F. (1994). The sharpe ratio. *Journal of Portfolio Management, 21*(1), 49–58.

Simos, T. E., Mourtas, S. D., & Katsikis, V. N. (2021). Time-varying Black–Litterman portfolio optimization using a bio-inspired approach and neuronets. *Applied Soft Computing, 112*, 107767.

Sklar, M. (1959). Fonctions de répartition à n dimensions et leurs marges. *Publications de l'Institut de statistique de l'Université de Paris, 8*, 229–231.

Srivastava, N., Hinton, G., Krizhevsky, A., Sutskever, I., & Salakhutdinov, R. (2014). Dropout: A simple way to prevent neural networks from overfitting. *Journal of Machine Learning Research, 15*(56), 1929–1958.

Stay, R. S. (2010). *Analysis of financial time series*. 3/e, Wiley,

Ta, B. Q., & Vuong, T. (2020). The Black–Litterman model for portfolio optimization on Vietnam stock market. *International Journal of Uncertainty, Fuzziness and Knowledge-Based Systems, 28*(Supp01), 99–111.

Teplova, T., Evgeniia, M., Munir, Q., & Pivnitskaya, N. (2023). Black–Litterman model with copula-based views in mean-CVaR portfolio optimization framework with weight constraints. *Economic Change and Restructuring, 56*, 515–535.

Walters, J. (2008). The Black–Litterman model: A detailed exploration. *blackliterman.org*.

Xing, F. Z., Cambria, R. E., & Welsch, E. (2018). Intelligent asset allocation via market sentiment views. *IEEE Computational Intelligence Magazine, 13*(4), 25–34.

Yao, H., Li, X., & Li, L. (2023). Asset allocation based on LSTM and the Black–Litterman model. *Applied Economics Letters*, pp. 1–6.

Yong, F., Lin, B., Daping, Z., & Shouyang, W. (2018). Fuzzy views on Black–Litterman portfolio selection model. *Journal of Systems Science and Complexity, 31*, 975–987.

Zaremba, W., Sutskever, I., & Vinyals, O. (2015). Recurrent neural network regularization. arXiv preprint arXiv:1409.2329,

Publisher's Note Springer Nature remains neutral with regard to jurisdictional claims in published maps and institutional affiliations.

Springer Nature or its licensor (e.g. a society or other partner) holds exclusive rights to this article under a publishing agreement with the author(s) or other rightsholder(s); author self-archiving of the accepted manuscript version of this article is solely governed by the terms of such publishing agreement and applicable law.