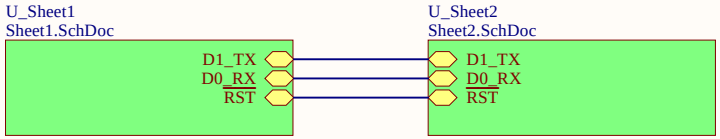

Released under the
Creative Commons Attribution Share-Alike 4.0 License
http://creativecommongs.org/licenses/by-sa/4.0/legalcode

Design by:
Original design by Arduino Team;
Based on Arduino Uno R3 from arduino.cc.

Title	*Arduino UNO REV3 Compatible*		
Size: A4	Number: 00.00.01	Revision: 00	
Date: 17/10/2018	Time: 19:41:15	Sheet1 of 3	
File: C:\Users\Public\Documents\Altium\Projects\Arduino Uno\Main.SchDoc			

STARLING Electronics

Belo Horizonte, MG
Brasil

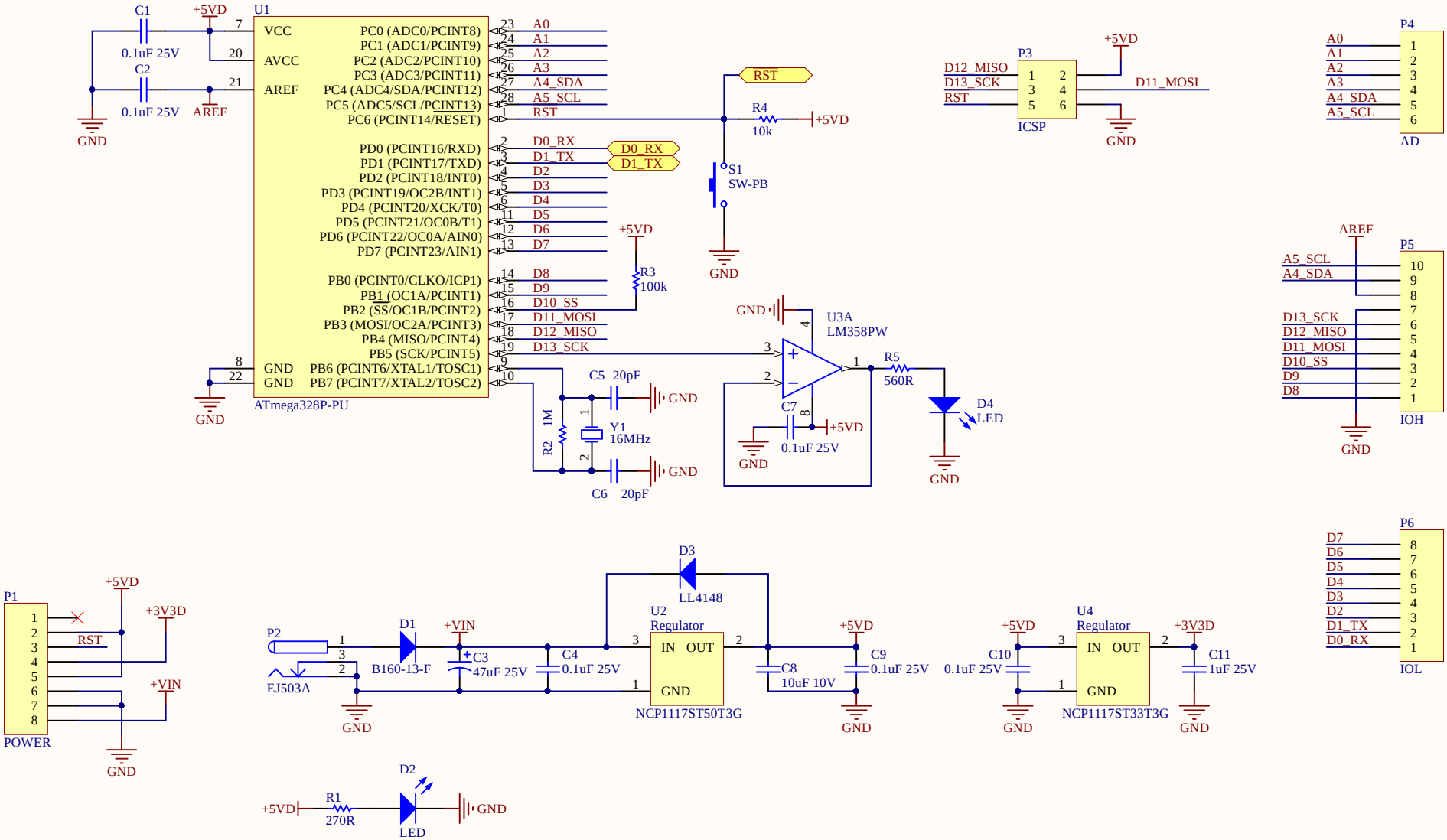

Released under the
Creative Commons Attribution Share-Alike 4.0 License
http://creativecommongs.org/licenses/by-sa/4.0/legalcode

Design by:
Original design by Arduino Team;
Based on Arduino Uno R3 from arduino.cc.

Title	*Arduino UNO REV3 Compatible*		*STARLING Electronics*
Size: A4	Number: 00.00.01	Revision: 00	*Belo Horizonte, MG Brasil*
Date: 17/10/2018	Time: 19:41:15	Sheet 2 of 3	
File: C:\Users\Public\Documents\Altium\Projects\Arduino Uno\Sheet1.SchDoc			

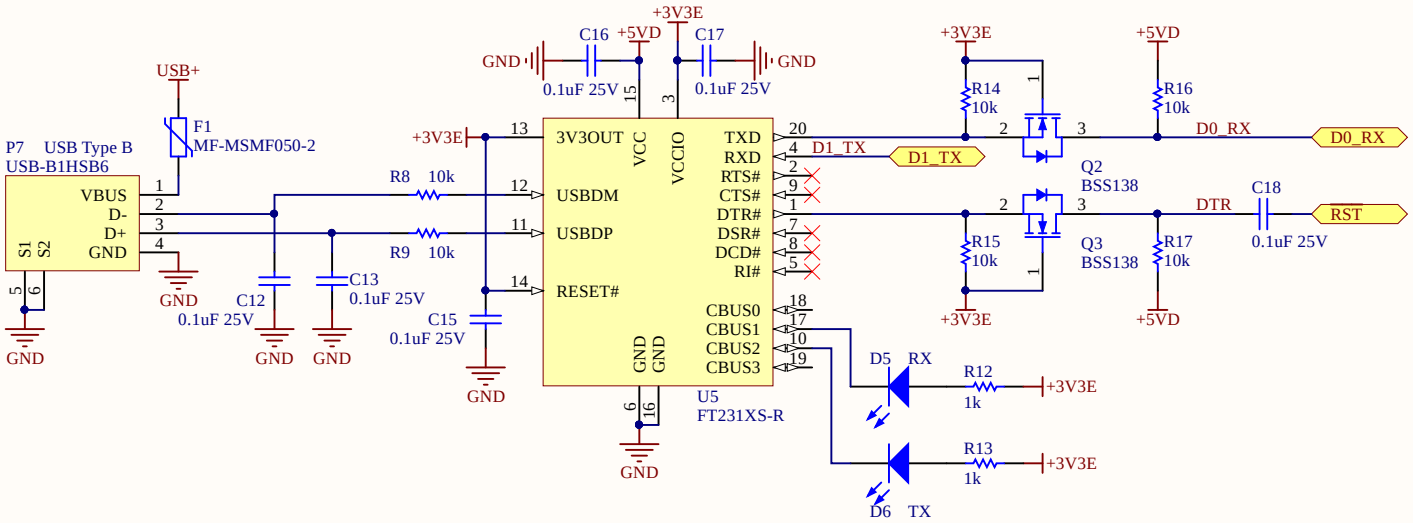

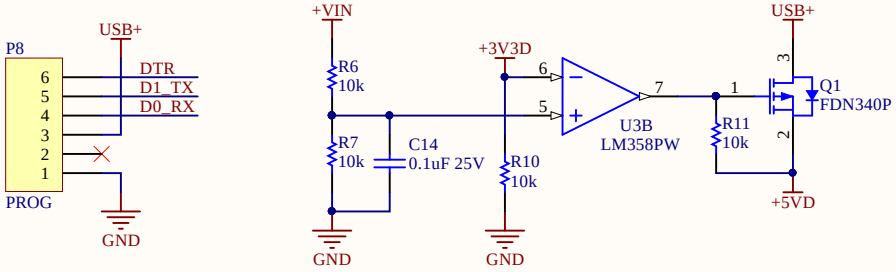

Released under the
Creative Commons Attribution Share-Alike 4.0 License
http://creativecommongs.org/licenses/by-sa/4.0/legalcode

Design by:
Original design by Arduino Team;
Based on Arduino Uno R3 from arduino.cc.

Title	*Arduino UNO REV3 Compatible*		*STARLING Electronics*
Size: A4	Number: 00.00.01	Revision: 00	*Belo Horizonte, MG Brasil*
Date: 17/10/2018	Time: 19:41:15	Sheet 3 of 3	
File: C:\Users\Public\Documents\Altium\Projects\Arduino Uno\Sheet2.SchDoc			