Implementation and Performance Evaluation of a Dual-Mode Gesture-Based Control System for Robotic Teleoperation and Contactless Human–Computer Interaction

Tarandeep Singh
Department of Automation and Robotics Engineering
Prestige Institute of Engineering Management and Research
Indore,India
51110905208@piemr.edu.in

Ashutosh Jaiswal
Department of Automation and Robotics Engineering
Prestige Institute of Engineering Management and Research
Indore,India
51110905431@piemr.edu.in

Vansh Bhatnagar
Department of Automation and Robotics Engineering
Prestige Institute of Engineering Management and Research
Indore,India
51110905419@piemr.edu.in

Rashi Bhawsar
Department of Computer Science and Engineering
Prestige Institute of Engineering Management and Research
Indore,India
51110105256@piemr.edu.in

Yogesh Pandya
Department of Automation and Robotics Engineering
Prestige Institute of Engineering Management and Research
Indore,India
ypandya@piemr.edu.in

Uma Shankar Prasad
Department of Automation and Robotics Engineering
Prestige Institute of Engineering Management and Research
Indore,India
ushankar@piemr.edu.in

***Abstract*—Gesture-based interactive systems have the possibility to function as an alternative to conventional systems for controlling robot devices and facilitating human-computer interaction. This paper proposes the implementation of gesture-based control systems using a dual-mode approach, including wearable inertial devices and vision-based hand gesture recognition. The proposed wearable module makes use of an MPU6050 inertial measurement unit sensor and NRF24L01 for wireless communication. On the other hand, the vision-based gesture recognition system, termed Project Mudra, makes use of hand landmark detection using the Media Pipe framework and rule-based gesture recognition. The experimental results obtained for the proposed system, implemented using a Ryzen 5 processor, report an average processing speed of 18.19 frames per second, average gesture-to-action latency of 133.46 milliseconds, and internal module latency of 19.75 milliseconds, with a standard deviation of 1.13 milli seconds. The vision-based module resulted in a high accuracy of 81.04 percent in gesture recognition for five different gesture types. The IMU-based module resulted in an average wireless transmission latency of 19 MS, a communication range of 7 to 8 meters in indoor communication, and a high directional tilt consistency of 86 percent. This paper aims to present a comparison of the performance of the proposed gesture-based interaction system along with its reliability and limitations.**

Keywords— Gesture Recognition, IMU-Based Control, Human Computer Interaction, Robotic Teleoperation, Media-Pipe, Wireless Systems.

I. Introduction

Human-computer interaction is moving towards more natural and more intuitive interaction. Vision-based gesture recognition is extensively explored as a non-invasive way of interacting with computer systems [1, 2]. On the other hand, wearable systems with inertial sensing technology have been proposed for motion recognition in robotic teleoperation tasks [3, 4].

Although vision-based gesture recognition is based on vision input and computer vision techniques like landmark detection and convolutional networks, IMU-based gesture recognition is based on accelerometer and gyroscope input for recognition of hand motion patterns in any lighting condition [3].

In this paper, a novel approach for gesture control is proposed:

Vision-based gesture recognition for non-contact human-computer interaction & IMU-based wearable control for robotic teleoperation unlike many other works in gesture control that primarily focus on algorithm development, in this paper, implementation and performance evaluation of gesture control is presented.

II. Literature Review

Gesture recognition research has progressed from using model-based approaches to appearance-based vision systems [1], [2]. Earlier works have highlighted issues such as illumination variations and background complexities for vision-based approaches. Recent approaches such as Media Pipe Hands have enabled efficient real-time hand tracking using landmark regression approaches [5].Gesture recognition using IMUs has also gained attention and shown promising results. Mummadi et al. have achieved 92% accuracy using an IMU-based glove approach [3], whereas Kim et al. have achieved 98.6% accuracy using neural network models. Although RGB-D approaches provide more contextual information, they require more computational power. IMUs provide lower latency and robustness to environmental

XXX-X-XXXX-XXXX-X/XX/$XX.00 ©20XX IEEE

variations [4]. This work contributes to the existing literature by proposing a unified approach for performance comparison using both approaches.

III. System Architecture

The proposed system consists of two independent modules:

A. IMU-Based Robotic Control Module

The architecture for the IMU-based gesture control system for robotic movement is depicted in **Fig. 1** The IMU sensor MPU6050 is used to detect the hand tilt gesture. The data obtained from the IMU sensor is processed by the Arduino Nano board, which is the transmitter. The data is transmitted to the receiver end using the wireless communication module NRF24L01. The transmitted data is processed by the Arduino Uno board and sent to the L298N motor driver. The DC motors are controlled by the driver to move the robot in the desired direction.

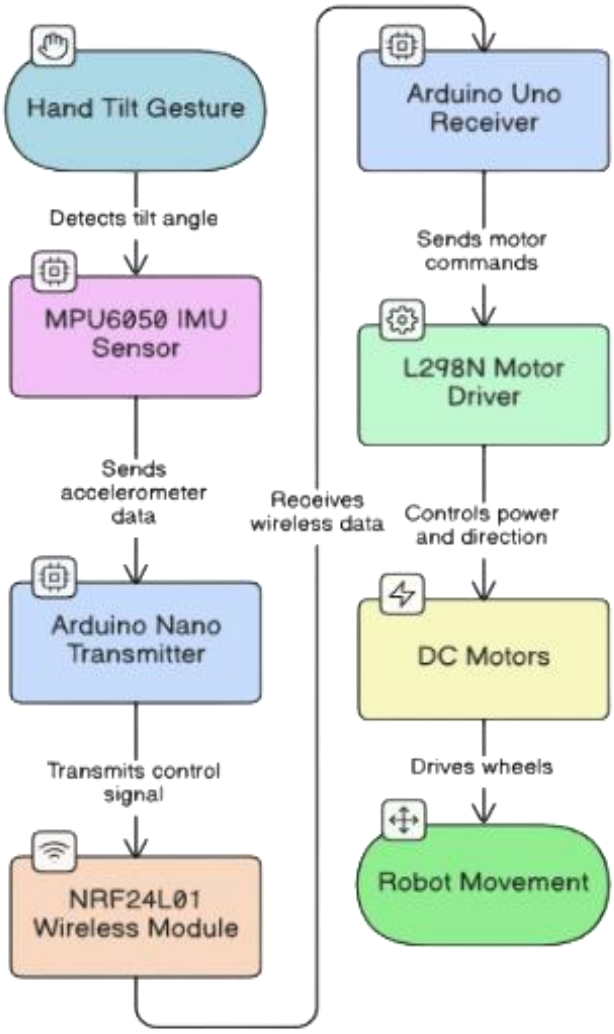

Fig 1.IMU-Based Gesture Control Architecture

B. Vision-Based Contactless HCI Module (Project Mudra)

Fig. 2 shows the workflow of the vision-based gesture recognition system. The hand gesture is captured in real time by using a camera input. The hand is detected by using the Media-Pipe framework. The 21 landmark points are used to represent the position of the fingers and the palm of the hand. The landmark points are processed to extract the features of the hand gesture. The gesture is classified by using the landmark points. Once the gesture is classified, the corresponding command is executed using the Py-Auto-GUI library.

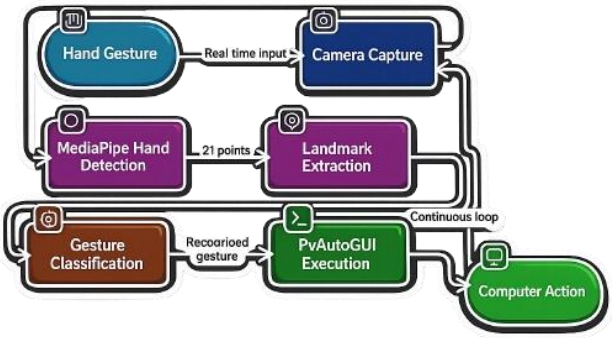

Fig. 2 Vision-Based Gesture Recognition System

Both modules operate independently but share a gesture-to-action control paradigm.

IV. IMU-Based Robotic Control Module

A. Hardware Configuration

Component	Details
Arduino Nano	Arduino Nano microcontroller
MPU6050 IMU	MPU6050 inertial measurement unit
NRF24L01	Wireless transceiver module
Lithium-ion power supply	Power source for transmitter module

Table 1. Transmitter Hardware component

Fig. 3 illustrates the hardware configuration of the transmitter module of the IMU-based gesture control system. In this module, the MPU6050 sensor, which is an accelerometer and gyroscope sensor, is used to sense the orientation of the user's hand. The sensor data is then processed by the Arduino Nano microcontroller, which serves as a control unit for the system. The NRF24L01 wireless transceiver module is then employed for wireless transmission of the processed gesture data to the receiver module. In addition, a capacitor is integrated into the system for power supply stabilization, and a 2×AA battery pack is used as a power source for the system.

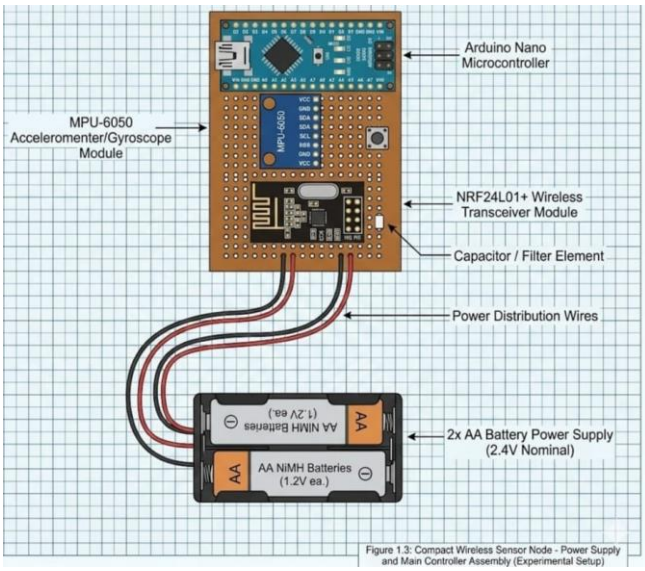

Fig. 3 IMU-Based Gesture Control Transmitter Hardware

Component	Details
Arduino Uno	Arduino Uno microcontroller
NRF24L01	Wireless transceiver module
L298N	L298N motor driver module
Four DC motors	Motors used for robotic movement

Table 2. Receiver Hardware component

Fig. 4 depicts the hardware setup for the receiver side of the gesture-controlled robotic platform. The Arduino Uno microcontroller is used as the main controller, which accepts wireless commands from the NRF24L01 module. The commands are from the detected gestures of the transmitter side. The L298N motor driver is used for controlling the motors, which are DC gear motors used for the movement of the robot. The system is powered by a three-cell 18650 battery pack, which provides the necessary voltage for the motors as well as the controllers.

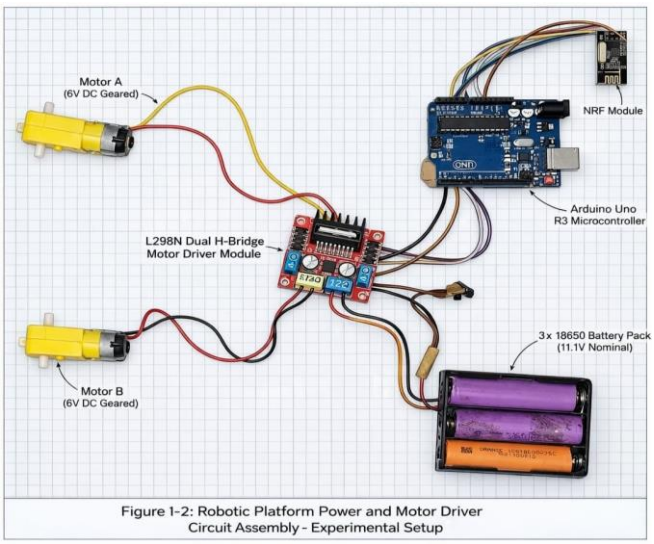

Figure. 4 Receiver-Side Robotic Platform Hardware Setup

The hardware configuration of the robotic platform used for the experiments is illustrated in **Figure 3-4.**

B. Control Logic

Directional control of the robotic platform is implemented using orientation-based thresholding derived from the accelerometer and gyroscope readings of the MPU6050 sensor. Predefined acceleration thresholds are used to detect directional commands such as:

- FORWARD
- BACKWARD
- LEFT
- RIGHT

A failsafe timeout mechanism automatically stops the motors if wireless communication is interrupted.

V. VISION-BASED HCI MODULE

A. Hardware Platform

- Processor: AMD Ryzen 5 5625U
- RAM: 16 GB
- Operating System: 64-bit OS
- Camera Resolution: 1280 × 720

GPU acceleration was not used during the experiments.

B. Software Framework

The software pipeline was implemented using, Python, OpenCV, Media-Pipe, Py-Auto-GUI, NumPy.

Fig. 5 demonstrates the results of the hand gesture recognition used to generate the control commands. The system uses the Media-Pipe framework to recognize the hand landmarks and obtain the key finger positions. Various hand gestures are associated with the control modes of the computer. The detected landmarks are used to accurately identify the orientation of the finger. Once the gesture is recognized, the control interface is used to execute the command. This allows the user to interact with the computer system using hand gestures.

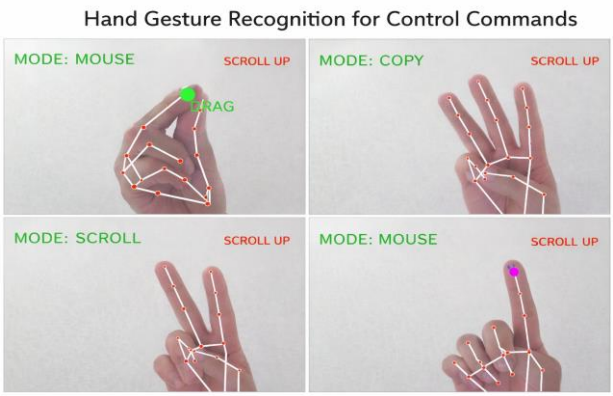

Fig.5 Vision-based gesture recognition in Project Mudra.

VI. EXPERIMENTAL SETUP

The performance metrics were evaluated using, Frame rate (FPS), End-to-end gesture-to-action latency, Internal classification latency, CPU utilization, IMU wireless latency, IMU communication range and Directional tilt reliability.

A total of **50 trials per gesture class** was performed, resulting in **250 labeled trials** for the IMU module, a total of **100 tilt trials were performed for each direction**.

VII. RESULTS

A. Vision-Based Computational Performance

The vision module's average FPS value was recorded at 18.19 FPS at a resolution of 1280 x 720 pixels. The average gesture-to-action latency was recorded at 133.46 MS, while the internal classification latency was recorded at 19.75 MS(σ = 1.13 MS).The average time taken for processing each frame was recorded at 31.01 MS, resulting in an upper theoretical bound of 32 FPS .The average CPU utilization during the execution of the system was recorded at 27.18%, while it occasionally reached as high as 100% (σ = 19.80%).The values were recorded during the entire runtime of the gesture recognition experiment using the operating system's performance monitoring tool. The processor load values were recorded at regular intervals during the execution of the following operations: acquisition of frames, hand landmark detection, gesture classification, and action execution .The average value represents the average CPU utilization during the processing of all the frames, while the maximum value represents the CPU utilization during the execution of CPU-intensive operations such as acquiring images and detecting landmarks. The standard deviation value (σ = 19.80%) represents the standard deviation in CPU load values resulting from the variable time taken in processing each frame.

B. Vision-Based Gesture Classification Performance

The per-class gesture recognition performance is shown in **Table 3**.

Gesture	Precision (%)	Recall (%)	F1 Score (%)
COPY	76.97	85.49	81.01
MOUSE	79.88	75.33	77.54
PASTE	85.87	92.80	89.20
SCROLL	78.66	79.36	79.01
TAB	85.05	85.32	85.19

The PASTE gesture achieved the highest classification performance, while the MOUSE gesture showed slightly lower performance due to similarities in finger configurations.

C. IMU-Based Robotic Control Performance

1. Transmission Latency

The average wireless transmission latency was 19 ms for distances up to 2 meters.

2. Communication Range

Reliable communication was maintained up to 7–8 meters indoors.

3. Directional Tilt Reliability

For the IMU module, 100 controlled tilt trials were conducted for each direction (forward, backward, left, right), resulting in 400 directional control tests. Out of these, 344 commands were correctly detected, producing an overall directional reliability of **86%**.Misclassifications occurred when tilt angles were close to predefined thresholds or when rapid hand motion introduced sensor noise.

VIII. DISCUSSION

The vision-based gesture recognition system revealed a fair level of computational efficiency along with the associated gesture classification performance. The classification latency of 19.75 MS suggests the overall efficiency of the landmark-based rule decision logic. However, the overall gesture recognition efficiency of 81.04 percent suggests the limitations associated with the rule-based gesture recognition approach. Such limitations suggest the need to explore more efficient gesture recognition approaches to support the needs of complex interaction environments. On the other hand, the IMU-based gesture control module revealed a relatively low actuation latency of around 19 MS. This suggests the overall suitability of the IMU-based gesture control module to support the needs of real-time control environments. The overall directional reliability of the gesture control module revealed a fair level of reliability of 86 percent. However, the limitations associated with the overall threshold-based approach to detect the associated tilting movements suggest the overall need to explore more efficient filtering approaches to enhance the overall reliability of the gesture control module.

IX. CONCLUSION

This study presented and evaluated a dual-mode gesture-controlled system integrating IMU-based robotic teleoperation with vision-based contactless HCI. 81.04% Overall Classification Accuracy was calculated using:

$$\text{Accuracy} = (\text{Correct Predictions} / \text{Total Predictions}) \times 100$$

During the process of experimental evaluation, a total of 250 gesture trials were carried out. Out of these trials, a total of 202 gestures were correctly classified by the system. The classification latency associated with the classification process was observed to be 19.75 milliseconds. The end-to-end average latency associated with the system was observed to be 133.46 milliseconds. The end-to-end average latency includes the time taken for acquiring frames, detecting hand landmarks, and executing the corresponding system action. The IMU-based module was observed to perform efficiently

for robotic teleoperation. The communication delay between the transmitter and receiver modules was observed to be 19 milliseconds. The communication system was able to attain a reliable communication range of 7 to 8 meters. The overall directional consistency associated with the tilt-based gesture control system was observed to be 86 percent during repeated experiments. The overall system can be improved by removing the limitations associated with the system. The overall system can be improved by improving the accuracy associated with the gesture classification process by employing machine learning-based classifiers.

X. REFERENCES

[1] P. MURTHY AND R. JADON, "A REVIEW OF VISION-BASED HAND GESTURE RECOGNITION," INTERNATIONAL JOURNAL OF INFORMATION TECHNOLOGY AND KNOWLEDGE MANAGEMENT, VOL. 2, NO. 2, PP. 405–410, 2009.

[2] Y. Wu and T. S. Huang, "Vision-based gesture recognition: A review," in Proc. International Gesture Workshop, 1999, pp. 103–115.

[3] C. K. Mummadi et al., "IMU-based wearable gesture recognition system," in Proc. IEEE Sensors Applications Symposium, 2018.

[4] A. Roda-Sánchez et al., "Comparison of RGB-D and IMU-based gesture recognition systems for human–machine interaction," IEEE Access, 2023.

[5] F. Zhang, V. Bazarevsky, A. Vakunov, et al., "Media-Pipe Hands: On-device real-time hand tracking," arXiv preprint arXiv:2006.10214, 2020.

[6] J. Kim et al., "Deep learning-based hand gesture recognition using inertial sensors," IEEE Access, vol. 7, pp. 123–134, 2019.

[7] V. Pavlovic, R. Sharma, and T. S. Huang, "Visual interpretation of hand gestures for human–computer interaction: A review," IEEE Transactions on Pattern Analysis and Machine Intelligence, vol. 19, no. 7, pp. 677–695, 1997.

[8] S. Mitra and T. Acharya, "Gesture recognition: A survey," IEEE Transactions on Systems, Man, and Cybernetics, vol. 37, no. 3, pp. 311–324, 2007.

[9] V. Bazarevsky et al., "BlazePose: On-device real-time body pose tracking," in Proc. IEEE/CVF Conference on Computer Vision and Pattern Recognition Workshops, 2020.

[10] H. Koppula and A. Saxena, "Learning spatio-temporal structure from RGB-D videos for human activity detection," in Proc. International Conference on Machine Learning, 2013.