Hidden Quantum Memory: Is Memory There When Somebody Looks?

Philip Taranto[1 2 3] and Simon Milz[3]

[1]Atominstitut, Technische Universität Wien, 1020 Vienna, Austria

[2]University of Vienna, Vienna Doctoral School in Physics, Boltzmanngasse 5, 1090 Vienna, Austria

[3]Institute for Quantum Optics and Quantum Information, Austrian Academy of Sciences, Boltzmanngasse 3, 1090 Vienna, Austria

July 15, 2022

arXiv:2204.08298v2 [quant-ph] 14 Jul 2022

In classical physics, memoryless processes and Markovian statistics are one and the same. This is not true for quantum processes, first and foremost due to the fact that quantum measurements are invasive. Independently of measurement invasiveness, here we derive a novel distinction between classical and quantum processes, namely the possibility of *hidden quantum memory*. While Markovian statistics of classical processes can always be reproduced by a memoryless dynamics, our main result establishes that this is not the case in quantum mechanics: We first provide an example of quantum non-Markovianity that depends on whether or not a previous measurement is performed—a phenomenon that is impossible for memoryless processes; we then strengthen this result by demonstrating statistics that are Markovian independent of how they are probed, but are are nonetheless *still* incompatible with memoryless quantum dynamics. Thus, we establish the existence of Markovian statistics that *fundamentally* require quantum memory for their creation.

Our ability to understand and control memory effects in the evolution of open quantum systems is becoming increasingly important as technology allows us to manipulate interactions with increasing levels of speed, precision and complexity [1, 2]. Control over memory can be advantageous in various tasks, such as the creation, manipulation and preservation of coherences and correlations [3, 4], reservoir engineering to simulate complex dynamics [5–16], sophisticated randomised benchmarking and quantum error correction [17–19], optimal dynamical decoupling [20–22], designing quantum circuit architectures [23–29], and improving the efficiency of thermodynamic machines [30–32].

Philip Taranto: philip.taranto@tuwien.ac.at
Simon Milz: simon.milz@oeaw.ac.at

One has no choice but to account for complex noise and memory effects when modelling realistic dynamical systems, as no system is truly isolated; in general, the environment stores information about the past and perpetuates it in time, leading to memory effects that manifest themselves as complex multi-time correlations [33–37]. A special case of open dynamics are memoryless processes, for which the environment retains *no* memory of previous interactions with the system.

Memoryless dynamics have been studied extensively due to their accuracy in many practically relevant situations and their exponentially reduced complexity from the general scenario. Both in the classical and quantum setting, such efficient descriptions arise by way of (time-local) master equations that efficiently simulate the system dynamics [38–40]; in practice, the assumption of memorylessness is often made for simplicity and describes many 'real-world' scenarios with high accuracy [41–44].

However, experimentally determining that a quantum process is indeed memoryless requires full process tomography, which necessitates a myriad of complex sequential measurements and has consequently only been done for low-dimensional cases [26–28, 45]. A more experimentally tractable situation is the sequential probing of a fixed observable via sharp, projective measurements. In this case, memory-

less quantum processes—just like their classical counterparts—lead to Markovian statistics, i.e., statistics where the future is conditionally independent of the past. Thus, at first glance, memorylessness seems to manifest on the experimental level in the same way for both classical and quantum processes. However, this is not the case; for one, quantum measurements are generally invasive, leading to inconsistent statistics [46] and the violation of Leggett-Garg type inequalities [47–49]. Moreover—independent of measurement invasiveness—as we demonstrate in this article, quantum processes can yield Markovian statistics *that fundamentally require memory* for their creation.

More concretely, in classical physics, *any* Markovian statistics can be described by a memoryless dynamical model (i.e., as emerging from a set of independent stochastic matrices). In the quantum case, measurements in a fixed basis are not tomographically complete; consequently, the existence of processes with memory that nonetheless lead to Markovian statistics when probed in said basis is not surprising *per se* and has been demonstrated [50–52]. This phenomenon notwithstanding, for any experiment that yields Markovian statistics, it is reasonable to believe that there *always exists* some memoryless quantum process that faithfully reproduces the observed statistics. Such a description is known as the *quantum regression formula* **(QRF)** [41, 42, 53] and is a widely used assumption that links operational quantities—namely, recorded statistics—to dynamical ones—namely, a model of the underlying process.

Here, we ask the question: *Can Markovian statistics always be faithfully reproduced by a memoryless dynamical model?* In other words, can the QRF always be employed to describe Markovian statistics? Our main result, perhaps surprisingly, answers this in the negative. Since this is not possible in classical physics, we thus uncover a new type of genuinely quantum phenomenon: *Hidden quantum memory.* This observation makes quantum memory an emergent phenomenon: Observing Markovianity with respect to a fixed measurement basis is not sufficient to guarantee the existence of a memoryless dynamical descriptor. Such hidden quantum memory is similar in spirit to other quantum traits that require precisely the resource in their implementation that they ultimately hide, such as quantum channels that preserve all separable states but cannot be implemented via local operations and classical communication [54–56], nonsignalling maps that require signalling [57], and maximally incoherent operations that necessitate coherent resources [58–60], to name but a few. We begin by outlining the envisaged setup before detailing key properties of memoryless processes (both classical and quantum).

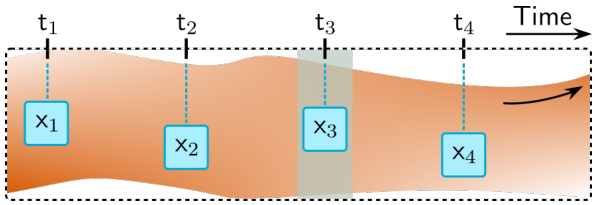

Figure 1: *Probing a process.* By probing a process—for example Brownian motion, or the evolution of a spin degree of freedom—sequentially (here, at times $\mathcal{T}_4 = \{t_1, t_2, t_3, t_4\}$, an experimenter can deduce the probability distribution $\mathbb{P}(x_4, x_3, x_2, x_1)$. In the classical case, this also includes all 'contained' distributions, for example $\mathbb{P}(x_4, x_2, x_1)$ via marginalisation [see Eq. (4)]. In the quantum case, due to invasiveness, deducing said distributions would require a new experiment where *no* measurement is performed at t_3 (depicted by the shaded box).

1 Framework

In any experimental scheme concerning temporal processes, an experimenter probes a system of interest at (any subset of) times $\mathcal{T}_n := \{t_1, \ldots, t_n\}$ (with $t_n > \cdots > t_1$) and records the corresponding probability distributions $\{\mathbb{P}(\boldsymbol{x}_\Gamma)\}$, where $\Gamma \subseteq \mathcal{T}$ and $\boldsymbol{x}_\Gamma := \{x_j | t_j \in \Gamma\}$ (see Fig. 1). These capture, for instance, the probability that x_1 is observed at time t_1 *and* x_2 at t_2, and so on, with all possible combinations of measurement times. Note that the experimenter can also *not* make a measurement at any intermediate time, e.g., $\mathbb{P}(x_3, x_1)$.

Independent of the physical scenario—it could be classical, quantum, or even post-quantum—one can define the concept of *Markovianity* based on the observed statistics alone, as conditional independence of any current outcome from all but the most recent. Concretely, we have the following working definition:

Definition 1. A *Markovian statistics* on a set of times $\mathcal{T}_n$ is a collection of conditional probability distributions $\{\mathbb{P}(x_j|x_{j-1},\dots,x_1)\}_{t_j\in\mathcal{T}_n}$ for which

$$\mathbb{P}(x_j|x_{j-1},\dots,x_1)=\mathbb{P}(x_j|x_{j-1}) \tag{1}$$

for all $t_j\in\mathcal{T}_n$.

Defined as such, the question of Markovianity is, a priori, theory-independent and concerns only the observed statistics. As we shall see, though, the concept of conditional probabilities is a subtle issue that depends on the envisaged scenario. Throughout this article, we distinguish Markovianity from the notion of *memoryless processes* which corresponds to the memory properties of the *underlying* dynamics that engenders the observed statistics, making the latter a *theory-dependent* concept.

Specifically, the question of memorylessness concerns whether, in the evolution of a system that is coupled to some inaccessible environment, said environment perpetuates past information about the system forward in time or irretrievably dissipates it. The description of such open evolution differs across physical theories: In the classical setting, the most general state transformations are stochastic matrices, whereas in the quantum realm, these are quantum channels. Probability distributions arising from interrogating either classical or quantum processes therefore have different properties since they are calculated via different rules. Our main result shows that this distinction holds for the relationship between Markovianity and memorylessness: Although equivalent in the classical case, in the quantum realm the observation of Markovian statistics does *not* guarantee even the existence of a memoryless dynamics that engenders them.

2 Classical Processes

We begin with a discussion of memoryless *classical* processes:

Definition 2. A *memoryless classical process* on $\mathcal{T}_n$ is a set of mutually independent stochastic matrices $\{S_{j:j-1}\}_{j=2,\dots,n}$ and an initial state (i.e., probability vector) $\boldsymbol{p}_1$ such that the probability distribution over any sequence of outcomes $x_1,\dots,x_n$ is given by

$$\mathbb{P}(x_n,\dots,x_1)= \langle x_n|S_{n:n-1}|x_{n-1}\rangle\langle x_{n-1}|\dots|x_2\rangle\langle x_2|S_{2:1}|x_1\rangle\langle x_1|\boldsymbol{p}_1, \tag{2}$$

where $|x_j\rangle\langle x_j|$ are projectors corresponding to measurement outcomes x_j.

Although in classical physics the environment plays a role in dictating the state transitions between any times t_{j-1} and t_j—namely via the stochastic matrices $S_{j:j-1}$, which are matrices with non-negative elements whose columns sum to unity—in *memoryless* processes, the environment does not perpetuate information, i.e., the stochastic matrices in Eq. (2) are mutually *independent*. On the other hand, Markovianity (see Def. 1) concerns only the observed statistics [l.h.s. of Eq. (2)]. In classical physics, we can make the following simple observation (see App. A):

Observation 1. *In the classical setting, memoryless processes are equivalent to Markovian statistics.*

Specifically, this equivalence is given by setting $\langle x_j|S_{j:j-1}|x_{j-1}\rangle=\mathbb{P}(x_j|x_{j-1})$, and it follows from Eq. (2) that for any Markovian statistics/memoryless classical process we have

$$\mathbb{P}(x_n,\dots,x_1)=\mathbb{P}(x_n|x_{n-1})\mathbb{P}(x_{n-1}|x_{n-2})\dots \times\dots\mathbb{P}(x_2|x_1)\,\mathbb{P}(x_1). \tag{3}$$

In one direction, Obs. 1 states that for any memoryless process, the observed statistics are Markovian—this is also true in the quantum setting (see below). Conversely, if one records Markovian statistics, then one can always construct a unique, memoryless process that faithfully reproduces them—as we will see, this is not true for statistics gathered from quantum processes.

A major distinction between classical and quantum processes (memoryless or not) is that in the classical realm, the single n-time probability distribution $\mathbb{P}(x_n,\dots,x_1)$ contains the entire set of statistics on all subsets of times $\Gamma\subseteq\mathcal{T}_n$. That is, the probability $\mathbb{P}(\boldsymbol{x}_\Gamma,\mathcal{I}_{\overline{\Gamma}})$ to observe a sequence of outcomes $\boldsymbol{x}_\Gamma$ when probing the process at times Γ and *not* measuring (denoted by the 'do-nothing instrument' $\mathcal{I}_{\overline{\Gamma}}$) at the remaining

times $\overline{\Gamma} := \mathcal{T}_n \setminus \Gamma$ can be deduced via marginalisation

$$\mathbb{P}(\boldsymbol{x}_\Gamma, \mathcal{I}_{\overline{\Gamma}}) = \sum_{\boldsymbol{x}_{\overline{\Gamma}}} \mathbb{P}(x_n, \ldots, x_1), \tag{4}$$

This *non-invasiveness* of measurements in classical physics underlies Obs. 1 and similarly fails to hold in quantum mechanics. As a direct consequence of measurement non-invasiveness, the properties of a memoryless classical process on $\mathcal{T}_n$ translate to all 'sub-processes' that are probed only at times $\Gamma \subseteq \mathcal{T}_n$ (see App. A):

Corollary 1. *All sub-statistics of a memoryless classical process are Markovian and the corresponding conditional probabilities are mutually compatible.*

By *compatible*, we mean that all conditional probabilities are independent of how they are obtained, i.e.,

$$\frac{\mathbb{P}(x_j, \boldsymbol{x}_{\Gamma^{(i)}})}{\mathbb{P}(\boldsymbol{x}_{\Gamma^{(i)}})} = \frac{\mathbb{P}(x_j, \boldsymbol{x}_{\Gamma^{(i)\prime}})}{\mathbb{P}(\boldsymbol{x}_{\Gamma^{(i)\prime}})} =: \mathbb{P}(x_j | x_i), \tag{5}$$

for all $t_j, t_i \in \mathcal{T}_n$ (with $t_j > t_i$) and all subsets $\Gamma^{(i)}, \Gamma^{(i)\prime} \subseteq \mathcal{T}_n$ that contain t_i as their largest time; for a classical memoryless process, knowledge of any outcome x_i suffices to erase all historic information (including whether or not a previous measurement was made) and is therefore the only relevant parameter for predicting future outcomes. Such compatibility between Markovian sub-statistics of a memoryless quantum process also holds, although it is less obvious, and we will later employ the breakdown of compatibility as a witness for memory.

3 Quantum Processes

In contrast to classical physics, in quantum mechanics, measurements are generally *invasive* such that there is a difference between averaging over outcomes and not performing a measurement. This makes (conditional) probabilities protocol-dependent entities that require specification; in what follows, whenever we consider a probability distribution $\mathbb{P}(\boldsymbol{x}_\Gamma)$ (or corresponding conditional probabilities), we always mean the statistics obtained from *only* performing measurements at times in the set $\Gamma \subseteq \mathcal{T}_n$, and doing nothing (denoted by $\mathcal{I}_{\overline{\Gamma}}$ at the remaining times $\overline{\Gamma} = \mathcal{T}_n \setminus \Gamma$. Importantly, in quantum mechanics—in contrast to Eq. (4)—generally $\mathbb{P}(\boldsymbol{x}_\Gamma) := \mathbb{P}(\boldsymbol{x}_\Gamma, \mathcal{I}_{\overline{\Gamma}}) \neq \sum_{\boldsymbol{x}_{\overline{\Gamma}}} \mathbb{P}(x_n, \ldots, x_1)$. Such measurement invasiveness is well-studied and has recently been used as a witness for the non-classicality of an underlying process [46, 61–63]. Despite these added subtleties in the definition of (conditional) probabilities, memoryless quantum processes lead—just like in the classical case—to well-defined, compatible Markovian statistics and sub-statistics. To see this, let us first provide the generalisation of Def. 2 to the quantum case:

Definition 3. A *memoryless quantum process* on $\mathcal{T}_n$ is a set of mutually independent completely positive and trace preserving **(CPTP)** maps $\{\Lambda_{j:j-1}\}_{j=2,\ldots,n}$ and an initial state (density operator) ρ_1 such that the probability distribution over any sequence of outcomes $x_1, \ldots, x_n$ is given by

$$\mathbb{P}(x_n, \ldots, x_1) = \mathrm{tr}\left[\mathcal{P}_n^{(x_n)} \Lambda_{n:n-1} \ldots \Lambda_{2:1} \mathcal{P}_1^{(x_1)}[\rho_1]\right], \tag{6}$$

where $\mathcal{P}_j^{(x_j)}[\,\bullet\,] := |x_j\rangle\langle x_j| \bullet |x_j\rangle\langle x_j|$ are maps corresponding to sharp (i.e., rank-1) projective measurements.

Analogous to the classical case, CPTP maps are the most general state transformations in the presence of noise, and the absence of memory corresponds to the mutual independence of the maps $\Lambda_{j:j-1}$ in the definition. The above equation to compute probabilities is commonly known as the *quantum regression formula* **(QRF)** [41, 42, 53]. Importantly, it allows for the computation of sub-statistics on any $\Gamma \subseteq \mathcal{T}_n$, not via marginalisation, but by replacing the projection operators corresponding to times in $\overline{\Gamma}$ in Eq. (6) by identity maps. Of course, one need not perform projective measurements, and the above formula can be used to calculate the probability distribution over *any* sequence of outcomes for arbitrary instruments. In contrast to classical measurements, such general quantum measurements do not necessarily reset the state of the system, which means that memoryless quantum processes can lead to non-Markovian statistics for general instruments [50, 51, 64, 65]. However, when restricted to sharp, projective measurements, then—just as in the classical setting—memorylessness in the quantum realm manifests itself on the observational level as Markovianity (see App. B):

Lemma 1. *Any memoryless quantum process leads to Markovian statistics (for sharp, projective measurements).*

We saw that memoryless classical processes also lead to (compatible) Markovian *sub*-statistics (see Cor. 1), where compatibility is given by Eq. (5). This is also true for memoryless quantum processes, with the important difference that sub-statistics are not obtained by marginalisation, but by 'doing nothing' at the excessive times, i.e., performing the experiment in a different way. Probing sub-statistics in this way then yields meaningful conditional probabilities and we have the following (see App. B):

Lemma 2. *Any memoryless quantum process leads to Markovian sub-statistics (for sharp, projective measurements) that are mutually compatible.*

In both quantum mechanics and classical physics, memoryless processes—when probed in a fixed basis—*always* lead to Markovian statistics and Markovian, compatible sub-statistics. In the classical setting, the converse is also true. From the observation of Markovian statistics one can construct a memoryless process describing the situation at hand. As discussed, measuring a quantum process in a fixed basis cannot provide enough information to fully determine the underlying process. Nonetheless, it is reasonable to assume that whenever one observes Markovian statistics, there should exist some memoryless description that correctly reproduces them (indeed, this is the assumption of employing the QRF to describe Markovian statistics). Thus, we now ask the question: *Given Markovian statistics (deduced via sharp, projective measurements), does there always exist a memoryless quantum process that faithfully reproduces them?*

4 Hidden Quantum Memory & Incompatability

We answer the above question in the negative, first by showing the existence of Markovian statistics with non-Markovian sub-statistics, and then by constructing a process with Markovian statistics and sub-statistics that are however incompatible.

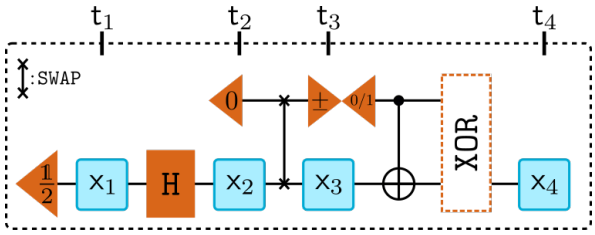

Figure 2: *Markovian statistics that require memory.* When probed by projective measurements in the σ_z-basis at *all* times, the circuit yields Markovian statistics. Without the XOR gate, memory becomes apparent when no measurement is performed at t_2 (Obs. 1). With the XOR gate, all sub-statistics are Markovian, but mutually incompatible (Obs. 2). Both situations are *only* possible in the presence of memory.

Theorem 1. *Given Markovian statistics on $\mathcal{T}_n$ (deduced via sharp, projective measurements), there does* not *always exist a memoryless quantum process that faithfully reproduces them.*

Proof. Our proof is by way of constructing an explicit example, depicted in Fig. 2. The process is over four times and the experimenter always measures in the computational σ_z-basis. An initial state $\rho_1 = \frac{\mathbb{1}}{2}$ is sent to the experimenter, who measures it. The process between times t_1 and t_2 is a Hadamard gate. Following the measurement at t_2, the system is swapped with a fiducial environment state $\tau = |0\rangle$, which is what the experimenter measures at time t_3. Meanwhile, the dynamics of the environment consists of a measurement in the σ_x-basis, followed by a preparation of $|0\rangle(|1\rangle)$ whenever $+(-)$ is recorded. Between times t_3 and t_4, the process comprises a CNOT gate, controlled on the environment. Due to the gates that act on the system *and* environment, this circuit can, in principle, display memory effects for the system dynamics. In App. C, we calculate the full statistics $\mathbb{P}(x_4, x_3, x_2, x_1)$ and show them to be Markovian, i.e., $\mathbb{P}(x_4|x_3, x_2, x_1) = \mathbb{P}(x_4|x_3)$ and $\mathbb{P}(x_3|x_2, x_1) = \mathbb{P}(x_3|x_2)$. This is because the measurement in the σ_z-basis at t_2 yields an output state that is unbiased with respect to the σ_x-basis measurement in the environment and therefore all memory of x_1 is lost. However, by calculating the sub-statistics where the experimenter does *not* measure at time t_2, i.e., $\mathbb{P}(x_4, x_3, \mathcal{I}_2, x_1)$, we see that they are *non*-Markovian since information about x_1 is now *not* fully scrambled by the 'interven-

tion' (or rather lack thereof) at t_2, and we have $\mathbb{P}(x_4|x_3, \mathcal{I}_2, x_1) \neq \mathbb{P}(x_4|x_3)$ with dependence on x_1. As we proved in Lem. 2, this cannot happen for *any* memoryless quantum process. Thus, even though the statistics on $\mathcal{T}_n$ is Markovian, there is *no* memoryless quantum process that faithfully reproduces the statistics on all four times, since the sub-statistics fail to be Markovian. □

Here, we have uncovered a new type of genuinely quantum phenomenon: *Hidden quantum memory.* The fact that full statistics can be Markovian but sub-statistics can be non-Markovian is impossible in the classical realm. Moreover, this property cannot occur for memoryless quantum processes either. Thus, we have shown the existence of Markovian statistics that, not only potentially come from a quantum process with memory (which can happen, as is well known, when measured in a fixed basis), but *fundamentally require* memory to reproduce them.

Another way of viewing this result is that non-Markovian sub-statistics serves as a witness for the necessity of memory in the underlying quantum process. This naturally begs the question: *If the full statistics and all sub-statistics are Markovian, does there always exist a memoryless quantum process that faithfully reproduces them*? In other words, is the ability to detect non-Markovian sub-statistics a requirement for ruling out a memoryless description of the quantum process? Here, we also answer this in the negative, providing a stronger result than above:

Theorem 2. *Given Markovian statistics and sub-statistics on $\mathcal{T}_n$ and all subsets thereof (deduced via sharp, projective measurements), there does not always exist a memoryless quantum process that faithfully reproduces them.*

Proof. The proof is again by constructing an explicit example. The process is similar to above, with the only modification being that after the final `CNOT` gate, there is an additional `XOR` gate performed on both system and environment (see Fig. 2). In App. C, we explicitly calculate the full statistics $\mathbb{P}(x_4, x_3, x_2, x_1)$ and all sub-statistics [e.g., $\mathbb{P}(x_4, x_3, \mathcal{I}_2, x_1)$, etc.] and show them to be Markovian. However, crucially, the conditional probabilities $\mathbb{P}(x_4|x_3, x_2, x_1)$ and $\mathbb{P}(x_4|x_3, \mathcal{I}_2, x_1)$ differ, i.e., we have $\mathbb{P}(x_4|x_3, x_2, x_1) =: \mathbb{P}(x_4|x_3) \neq \widetilde{\mathbb{P}}(x_4|x_3) := \mathbb{P}(x_4|x_3, \mathcal{I}_2, x_1)$. As stated in the second part of Lem. 2, such an incompatibility cannot occur for memoryless quantum processes, and so we again come to a contradiction with the existence of a memoryless process that engenders the observed statistics. □

5 Conclusions

In this article, we have presented the concept of hidden quantum memory, i.e., the existence of processes that yield Markovian statistics that *cannot* be explained without underlying memory effects. In a similar vein to the violation of Leggett-Garg type inequalities, this phenomenon can only occur when the performed measurements are invasive, since otherwise the observed statistics are fully classical and Markovianity and memorylessness coincide. However, hidden quantum memory is not merely a different manifestation of measurement invasiveness, but a distinct and fundamental quantum memory effect; while memoryless quantum processes can violate Leggett-Garg type inequalities, they cannot lead to hidden quantum memory.

Importantly, our results differ from the (known) fact that probing a quantum processes with memory in a fixed basis can yield Markovian statistics. For the Markovian statistics that we reported, there exists *no* memoryless model that reproduces them, either because they become non-Markovian when measurements are not performed at some times, or because all observed statistics and sub-statistics are Markovian but mutually incompatible. In turn, this implies that even if one observes Markovian statistics in a given basis, one cannot confidently employ a QRF to compute the statistics in said basis. As a consequence, even detecting the possibility of a memoryless description of a process is an experimentally complex undertaking that not only requires one to deduce joint probabilities on $\mathcal{T}_n$, but also on all subsets thereof. Naturally, one might expect that simultaneously demanding Markovianity *and* compatibility of all observed sub-statistics should suffice to guarantee a memoryless description. However, even under such strong requirements, the existence of a memoryless model is a priori not clear, and investigations into this question are subject to future work.

Together, our results expose a fundamentally new quantum effect in time and demonstrate the

richness of effects that arise from the intricate interplay of invasiveness, memory, and the freedom to choose different instruments that quantum mechanics affords.

Acknowledgments

We would like to thank Dario Egloff, Andrea Smirne, Kavan Modi, and Top Notoh for interesting discussions. P.T. is supported by the Austrian Science Fund (FWF) project: Y879-N27 (START). S.M. acknowledges funding from the Austrian Science Fund (FWF): ZK3 (Zukunftkolleg) and Y879-N27 (START project), the European Union's Horizon 2020 research and innovation programme under the Marie Skłodowska Curie grant agreement No 801110, and the Austrian Federal Ministry of Education, Science and Research (BMBWF). The opinions expressed in this publication are those of the authors, the EU Agency is not responsible for any use that may be made of the information it contains. This project/research was supported by grant number FQXi-RFP-IPW-1910 from the Foundational Questions Institute and Fetzer Franklin Fund, a donor advised fund of Silicon Valley Community Foundation.

References

[1] John Preskill. Quantum Computing in the NISQ era and beyond. *Quantum*, 2:79, 2018. DOI: 10.22331/q-2018-08-06-79.

[2] Antonio Acín, Immanuel Bloch, Harry Buhrman, Tommaso Calarco, Christopher Eichler, Jens Eisert, Daniel Esteve, Nicolas Gisin, Steffen J. Glaser, Fedor Jelezko, Stefan Kuhr, Maciej Lewenstein, Max F. Riedel, Piet O. Schmidt, Rob Thew, Andreas Wallraff, Ian Walmsley, and Frank K. Wilhelm. The quantum technologies roadmap: a European community view. *New J. Phys.*, 20:080201, 2018. DOI: 10.1088/1367-2630/aad1ea.

[3] Konrad Banaszek, Andrzej Dragan, Wojciech Wasilewski, and Czesław Radzewicz. Experimental Demonstration of Entanglement-Enhanced Classical Communication over a Quantum Channel with Correlated Noise. *Phys. Rev. Lett.*, 92:257901, 2004. DOI: 10.1103/PhysRevLett.92.257901.

[4] Julio T. Barreiro, Philipp Schindler, Otfried Gühne, Thomas Monz, Michael Chwalla, Christian F. Roos, Markus Hennrich, and Rainer Blatt. Experimental multiparticle entanglement dynamics induced by decoherence. *Nat. Phys.*, 6:943, 2010. DOI: 10.1038/nphys1781.

[5] Clément Sayrin, Igor Dotsenko, Xingxing Zhou, Bruno Peaudecerf, Théo Rybarczyk, Sébastien Gleyzes, Pierre Rouchon, Mazyar Mirrahimi, Hadis Amini, Michel Brune, Jean-Michel Raimond, and Serge Haroche. Real-time quantum feedback prepares and stabilizes photon number states. *Nature*, 477:73, 2011. DOI: 10.1038/nature10376.

[6] Arne L. Grimsmo. Time-Delayed Quantum Feedback Control. *Phys. Rev. Lett.*, 115:060402, 2015. DOI: 10.1103/PhysRevLett.115.060402.

[7] Jake Iles-Smith, Arend G. Dijkstra, Neill Lambert, and Ahsan Nazir. Energy transfer in structured and unstructured environments: Master equations beyond the Born-Markov approximations. *J. Chem. Phys.*, 144:44110, 2016. DOI: https://doi.org/10.1063/1.4940218.

[8] Javier Cerrillo, Maximilian Buser, and Tobias Brandes. Nonequilibrium quantum transport coefficients and transient dynamics of full counting statistics in the strong-coupling and non-Markovian regimes. *Phys. Rev. B*, 94:214308, 2016. DOI: 10.1103/PhysRevB.94.214308.

[9] A. Metelmann and A. A. Clerk. Nonreciprocal quantum interactions and devices via autonomous feedforward. *Phys. Rev. A*, 95:013837, 2017. DOI: 10.1103/PhysRevA.95.013837.

[10] S. J. Whalen, A. L. Grimsmo, and H. J. Carmichael. Open quantum systems with delayed coherent feedback. *Quantum Sci. Technol.*, 2:044008, 2017. DOI: 10.1088/2058-9565/aa8331.

[11] Daniel Basilewitsch, Rebecca Schmidt, Dominique Sugny, Sabrina Maniscalco, and Christiane P. Koch. Beating the limits with initial correlations. *New J. Phys.*, 19:113042, 2017. DOI: 10.1088/1367-2630/aa96f8.

[12] J. Fischer, D. Basilewitsch, C. P. Koch, and

D. Sugny. Time-optimal control of the purification of a qubit in contact with a structured environment. *Phys. Rev. A*, 99:033410, 2019. DOI: 10.1103/PhysRevA.99.033410.

[13] I. A. Luchnikov, S. V. Vintskevich, H. Ouerdane, and S. N. Filippov. Simulation Complexity of Open Quantum Dynamics: Connection with Tensor Networks. *Phys. Rev. Lett.*, 122:160401, 2019. DOI: 10.1103/PhysRevLett.122.160401.

[14] Mathias R. Jørgensen and Felix A. Pollock. Exploiting the Causal Tensor Network Structure of Quantum Processes to Efficiently Simulate Non-Markovian Path Integrals. *Phys. Rev. Lett.*, 123:240602, 2019. DOI: 10.1103/PhysRevLett.123.240602.

[15] Mathias R. Jørgensen and Felix A. Pollock. Discrete memory kernel for multitime correlations in non-Markovian quantum processes. *Phys. Rev. A*, 102:052206, 2020. DOI: 10.1103/PhysRevA.102.052206.

[16] Lorenzo Magrini, Philipp Rosenzweig, Constanze Bach, Andreas Deutschmann-Olek, Sebastian G. Hofer, Sungkun Hong, Nikolai Kiesel, Andreas Kugi, and Markus Aspelmeyer. Real-time optimal quantum control of mechanical motion at room temperature. *Nature*, 595:373, 2021. DOI: 10.1038/s41586-021-03602-3.

[17] Harrison Ball, Thomas M. Stace, Steven T. Flammia, and Michael J. Biercuk. Effect of noise correlations on randomized benchmarking. *Phys. Rev. A*, 93:022303, 2016. DOI: 10.1103/PhysRevA.93.022303.

[18] Pedro Figueroa-Romero, Kavan Modi, Robert J. Harris, Thomas M. Stace, and Min-Hsiu Hsieh. Randomized Benchmarking for Non-Markovian Noise. *PRX Quantum*, 2:040351, 2021. DOI: 10.1103/PRXQuantum.2.040351.

[19] Pedro Figueroa-Romero, Kavan Modi, and Min-Hsiu Hsieh. Towards a general framework of Randomized Benchmarking for non-Markovian Noise, 2022. URL `http://arxiv.org/abs/2202.11338`.

[20] Lorenza Viola, Emanuel Knill, and Seth Lloyd. Dynamical Decoupling of Open Quantum Systems. *Phys. Rev. Lett.*, 82:2417, 1999. DOI: 10.1103/PhysRevLett.82.2417.

[21] Michael J. Biercuk, Hermann Uys, Aaron P. VanDevender, Nobuyasu Shiga, Wayne M. Itano, and John J. Bollinger. Optimized dynamical decoupling in a model quantum memory. *Nature*, 458:996, 2009. DOI: 10.1038/nature07951.

[22] Carole Addis, Francesco Ciccarello, Michele Cascio, G. Massimo Palma, and Sabrina Maniscalco. Dynamical decoupling efficiency versus quantum non-Markovianity. *New J. Phys.*, 17:123004, 2015. DOI: 10.1088/1367-2630/17/12/123004.

[23] G. Chiribella, G. M. D'Ariano, and P. Perinotti. Quantum Circuit Architecture. *Phys. Rev. Lett.*, 101:060401, 2008. DOI: 10.1103/PhysRevLett.101.060401.

[24] Giulio Chiribella, Giacomo Mauro D'Ariano, and Paolo Perinotti. Theoretical framework for quantum networks. *Phys. Rev. A*, 80:022339, 2009. DOI: 10.1103/PhysRevA.80.022339.

[25] S. Mavadia, C. L. Edmunds, C. Hempel, H. Ball, F. Roy, T. M. Stace, and M. J. Biercuk. Experimental quantum verification in the presence of temporally correlated noise. *npj Quantum Inf.*, 4:7, 2018. DOI: 10.1038/s41534-017-0052-0.

[26] G. A. L. White, C. D. Hill, F. A. Pollock, L. C. L. Hollenberg, and K. Modi. Demonstration of non-Markovian process characterisation and control on a quantum processor. *Nat. Commun.*, 11:6301, 2020. DOI: 10.1038/s41467-020-20113-3.

[27] Gregory A. L. White, Felix A. Pollock, Lloyd C. L. Hollenberg, Kavan Modi, and Charles D. Hill. Non-Markovian Quantum Process Tomography, 2021. URL `http://arxiv.org/abs/2106.11722`.

[28] Yu Guo, Philip Taranto, Bi-Heng Liu, Xiao-Min Hu, Yun-Feng Huang, Chuan-Feng Li, and Guang-Can Guo. Experimental Demonstration of Instrument-Specific Quantum Memory Effects and Non-Markovian Process Recovery for Common-Cause Processes. *Phys. Rev. Lett.*, 126:230401, 2021. DOI: 10.1103/PhysRevLett.126.230401.

[29] Gregory A. L. White, Felix A. Pollock, Lloyd C. L. Hollenberg, Charles D. Hill, and Kavan Modi. From many-body to many-time physics, 2021. URL `http://arxiv.org/abs/2107.13934`.

[30] Bogna Bylicka, Mikko Tukiainen, Dariusz

Chruściński, Jyrki Piilo, and Sabrina Maniscalco. Thermodynamic power of non-Markovianity. *Sci. Rep.*, 6:27989, 2016. DOI: 10.1038/srep27989.

[31] Akihito Kato and Yoshitaka Tanimura. Quantum heat current under non-perturbative and non-Markovian conditions: Applications to heat machines. *J. Chem. Phys.*, 145:224105, 2016. DOI: 10.1063/1.4971370.

[32] Philip Taranto, Faraj Bakhshinezhad, Philipp Schüttelkopf, Fabien Clivaz, and Marcus Huber. Exponential Improvement for Quantum Cooling through Finite-Memory Effects. *Phys. Rev. Appl.*, 14: 054005, 2020. DOI: 10.1103/PhysRevApplied.14.054005.

[33] Ángel Rivas, Susana F. Huelga, and Martin B. Plenio. Quantum non-Markovianity: Characterization, quantification and detection. *Rep. Prog. Phys.*, 77:094001, 2014. DOI: 10.1088/0034-4885/77/9/094001.

[34] Heinz-Peter Breuer, Elsi-Mari Laine, Jyrki Piilo, and Bassano Vacchini. *Colloquium*: Non-Markovian dynamics in open quantum systems. *Rev. Mod. Phys.*, 88:021002, 2016. DOI: 10.1103/RevModPhys.88.021002.

[35] Inés de Vega and Daniel Alonso. Dynamics of non-Markovian open quantum systems. *Rev. Mod. Phys.*, 89:015001, 2017. DOI: 10.1103/RevModPhys.89.015001.

[36] Li Li, Michael J. W. Hall, and Howard M. Wiseman. Concepts of quantum non-Markovianity: A hierarchy. *Phys. Rep.*, 759:1, 2018. DOI: 10.1016/j.physrep.2018.07.001.

[37] Philip Taranto. Memory Effects in Quantum Processes. *Int. J. Quantum Inf.*, 18:1941002, 2020. DOI: 10.1142/S0219749919410028.

[38] G. Lindblad. On the generators of quantum dynamical semigroups. *Commun. Math. Phys.*, 48:119, 1976. DOI: 10.1007/BF01608499.

[39] Vittorio Gorini, Andrzej Kossakowski, and E. C. G. Sudarshan. Completely positive semigroups of N-level systems. *J. Math. Phys.*, 17:821, 1976. DOI: 10.1063/1.522979.

[40] Daniel Manzano. A short introduction to the Lindblad master equation. *AIP Adv.*, 10:025106, 2020. DOI: 10.1063/1.5115323.

[41] Howard Carmichael. *An Open Systems Approach to Quantum Optics*. Springer-Verlag, Berlin, 1993. DOI: 10.1007/978-3-540-47620-7.

[42] H.-P. Breuer and F. Petruccione. *The Theory of Open Quantum Systems*. Oxford University Press, 2007. DOI: 10.1093/acprof:oso/9780199213900.001.0001.

[43] N. van Kampen. *Stochastic Processes in Physics and Chemistry*. Elsevier, New York, 2011. DOI: 10.1016/B978-0-444-52965-7.X5000-4.

[44] Horacio Wio, Roberto Deza, and Juan López. *An Introduction to Stochastic Processes and Nonequilibrium Statistical Physics (Rev. Ed.)*. World Scientific, Singapore, 2012. DOI: 10.1142/8328.

[45] M. Ringbauer, C. J. Wood, K. Modi, A. Gilchrist, A. G. White, and A. Fedrizzi. Characterizing Quantum Dynamics with Initial System-Environment Correlations. *Phys. Rev. Lett.*, 114:090402, 2015. DOI: 10.1103/PhysRevLett.114.090402.

[46] Simon Milz, Fattah Sakuldee, Felix A. Pollock, and Kavan Modi. Kolmogorov extension theorem for (quantum) causal modelling and general probabilistic theories. *Quantum*, 4:255, 2020. DOI: 10.22331/q-2020-04-20-255.

[47] A. J. Leggett and Anupam Garg. Quantum mechanics versus macroscopic realism: Is the flux there when nobody looks? *Phys. Rev. Lett.*, 54:857, 1985. DOI: 10.1103/PhysRevLett.54.857.

[48] A. J. Leggett. Realism and the physical world. *Rep. Prog. Phys.*, 71:022001, 2008. DOI: 10.1088/0034-4885/71/2/022001.

[49] Clive Emary, Neill Lambert, and Franco Nori. Leggett–Garg inequalities. *Rep. Prog. Phys.*, 77:016001, 2014. DOI: 10.1088/0034-4885/77/1/016001.

[50] Philip Taranto, Felix A. Pollock, Simon Milz, Marco Tomamichel, and Kavan Modi. Quantum Markov Order. *Phys. Rev. Lett.*, 122:140401, 2019. DOI: 10.1103/PhysRevLett.122.140401.

[51] Philip Taranto, Simon Milz, Felix A. Pollock, and Kavan Modi. Structure of quantum stochastic processes with finite Markov order. *Phys. Rev. A*, 99:042108, 2019. DOI: 10.1103/PhysRevA.99.042108.

[52] Philip Taranto, Felix A. Pollock, and

Kavan Modi. Non-Markovian memory strength bounds quantum process recoverability. *npj Quantum Inf.*, 7:149, 2021. DOI: 10.1038/s41534-021-00481-4.

[53] Melvin Lax. Formal Theory of Quantum Fluctuations from a Driven State. *Phys. Rev.*, 129:2342, 1963. DOI: 10.1103/PhysRev.129.2342.

[54] Martin B. Plenio and Shashank Virmani. An Introduction to Entanglement Measures. *Quantum Info. Comput.*, 7:1, 2007. DOI: 10.5555/2011706.2011707.

[55] Ryszard Horodecki, Paweł Horodecki, Michał Horodecki, and Karol Horodecki. Quantum entanglement. *Rev. Mod. Phys.*, 81:865, 2009. DOI: 10.1103/RevModPhys.81.865.

[56] Eric Chitambar, Julio I. de Vicente, Mark W. Girard, and Gilad Gour. Entanglement manipulation beyond local operations and classical communication. *J. Math. Phys.*, 61:042201, 2020. DOI: 10.1063/1.5124109.

[57] David Beckman, Daniel Gottesman, M. A. Nielsen, and John Preskill. Causal and localizable quantum operations. *Phys. Rev. A*, 64:052309, 2001. DOI: 10.1103/PhysRevA.64.052309.

[58] Eric Chitambar and Gilad Gour. Critical Examination of Incoherent Operations and a Physically Consistent Resource Theory of Quantum Coherence. *Phys. Rev. Lett.*, 117:030401, 2016. DOI: 10.1103/PhysRevLett.117.030401.

[59] Eric Chitambar and Gilad Gour. Comparison of incoherent operations and measures of coherence. *Phys. Rev. A*, 94:052336, 2016. DOI: 10.1103/PhysRevA.94.052336.

[60] Iman Marvian and Robert W. Spekkens. How to quantify coherence: Distinguishing speakable and unspeakable notions. *Phys. Rev. A*, 94:052324, 2016. DOI: 10.1103/PhysRevA.94.052324.

[61] A. Smirne, D. Egloff, M. G. Díaz, M. B. Plenio, and S. F. Huelga. Coherence and non-classicality of quantum Markov processes. *Quantum Sci. Technol.*, 4:01LT01, 2019. DOI: 10.1088/2058-9565/aaebd5.

[62] Philipp Strasberg and María García Díaz. Classical quantum stochastic processes. *Phys. Rev. A*, 100:022120, 2019. DOI: 10.1103/PhysRevA.100.022120.

[63] Simon Milz, Dario Egloff, Philip Taranto, Thomas Theurer, Martin B. Plenio, Andrea Smirne, and Susana F. Huelga. When Is a Non-Markovian Quantum Process Classical? *Phys. Rev. X*, 10:041049, 2020. DOI: 10.1103/PhysRevX.10.041049.

[64] Felix A. Pollock, César Rodríguez-Rosario, Thomas Frauenheim, Mauro Paternostro, and Kavan Modi. Operational Markov Condition for Quantum Processes. *Phys. Rev. Lett.*, 120:040405, 2018. DOI: 10.1103/PhysRevLett.120.040405.

[65] Felix A. Pollock, César Rodríguez-Rosario, Thomas Frauenheim, Mauro Paternostro, and Kavan Modi. Non-Markovian quantum processes: Complete framework and efficient characterization. *Phys. Rev. A*, 97:012127, 2018. DOI: 10.1103/PhysRevA.97.012127.

A Classical Processes

A.1 Memoryless Classical Processes and Markovian Statistics

Here, we prove Obs. 1 of the main text:

Observation 1. *In the classical setting, memoryless processes are equivalent to Markovian statistics.*

Naturally, this equivalence is well-known, but its explicit discussion exposes many of the subtleties with respect to marginalisation that play a crucial role in the quantum case. For the proof, in the forwards direction, beginning with Eq. (2), we have

$$\mathbb{P}(x_n, \ldots, x_1) = \langle x_n | S_{n:n-1} | x_{n-1} \rangle\langle x_{n-1} | \ldots | x_2 \rangle\langle x_2 | S_{2:1} | x_1 \rangle\langle x_1 | \boldsymbol{p}_1 \,, \tag{7}$$

where $\{S_{j:j-1}\}$ and $\boldsymbol{p}_1$ are, respectively, the stochastic matrices and the initial probability vector that define the memoryless classical process. Computing the conditional probability for an arbitrary time t_j given the entire sequence of historic outcomes up until that time explicitly gives

$$\begin{aligned}\mathbb{P}(x_j | x_{j-1}, \ldots, x_1) &= \frac{\langle x_j | S_{j:j-1} | x_{j-1} \rangle\langle x_{j-1} | S_{j-1:j-2} | x_{j-2} \rangle\langle x_{j-2} | \ldots | x_2 \rangle\langle x_2 | S_{2:1} | x_1 \rangle\langle x_1 | \boldsymbol{p_1}}{\langle x_{j-1} | S_{j-1:j-2} | x_{j-2} \rangle\langle x_{j-2} | \ldots | x_2 \rangle\langle x_2 | S_{2:1} | x_1 \rangle\langle x_1 | \boldsymbol{p_1}} \\ &= \langle x_j | S_{j:j-1} | x_{j-1} \rangle \qquad \forall\, x_{j-2}, \ldots, x_1. \end{aligned} \tag{8}$$

This expression is independent of all $x_1, \ldots, x_{j-2}$ and it is indeed equivalent to the the conditional probability $\mathbb{P}(x_j | x_{j-1})$ an experimenter would observe when only making measurements at t_{j-1} and t_j, i.e., they do not measure (which we denote below by $\mathcal{I}_{j-2:1}$). Unlike in quantum mechanics, this conditional probability can be expressed by marginalising the full joint probability distribution [see Eq. (4)] as follows

$$\begin{aligned}\mathbb{P}(x_j | x_{j-1}) &= \frac{\mathbb{P}(x_j, x_{j-1}, \mathcal{I}_{j-2:1})}{\mathbb{P}(x_{j-1}, \mathcal{I}_{j-2:1})} \\ &= \frac{\sum_{x_{j-2},\ldots,x_1} \mathbb{P}(x_j, x_{j-1}, x_{j-2}, \ldots, x_1)}{\sum_{x_{j-2},\ldots,x_1} \mathbb{P}(x_{j-1}, x_{j-2}, \ldots, x_1)} \\ &= \frac{\sum_{x_{j-2},\ldots,x_1} \langle x_j | S_{j:j-1} | x_{j-1} \rangle\langle x_{j-1} | S_{j-1:j-2} | x_{j-2} \rangle\langle x_{j-2} | \ldots | x_2 \rangle\langle x_2 | S_{2:1} | x_1 \rangle\langle x_1 | p_1 | x_0 \rangle}{\sum_{x_{j-2},\ldots,x_1} \langle x_{j-1} | S_{j-1:j-2} | x_{j-2} \rangle\langle x_{j-2} | \ldots | x_2 \rangle\langle x_2 | S_{2:1} | x_1 \rangle\langle x_1 | p_1 | x_0 \rangle} \\ &= \langle x_j | S_{j:j-1} | x_{j-1} \rangle. \end{aligned} \tag{9}$$

Thus we have that for a memoryless process, the conditional probabilities $\mathbb{P}(x_j | x_{j-1}, \ldots, x_1)$ and $\mathbb{P}(x_j | x_{j-1})$ coincide (and amount to $\langle x_j | S_{j:j-1} | x_{j-1} \rangle$), leading to Markovianity of the statistics and consequently the decomposition of the joint probability distribution expressed in Eq. (3).

Conversely, any Markovian statistics can be faithfully reproduced via a memoryless classical model: Given any joint probability distribution over measurement outcomes for a classical stochastic process, one can always write

$$\mathbb{P}(x_n, \ldots, x_1) = \mathbb{P}(x_n | x_{n-1}, \ldots, x_1) \mathbb{P}(x_{n-1} | x_{n-2}, \ldots, x_1) \ldots \mathbb{P}(x_2 | x_1)\, \mathbb{P}(x_1). \tag{10}$$

Equation (10) holds true for any probability distribution (by definition of conditional probabilities), with the decomposition on the r.h.s. encoding potential memory effects. For Markovian statistics, the above expression simplifies to Eq. (3). Then, one can simply define a set of matrices $\{S_{j:j-1}\}$ via

$$\langle x_j | S_{j:j-1} | x_{j-1} \rangle := \mathbb{P}(x_j | x_{j-1}). \tag{11}$$

These matrices are stochastic (as they contain only non-negative entries and each of the columns to unity since $\sum_{x_j} \mathbb{P}(x_j | x_{j-1}) = 1\, \forall\, x_{j-1}$). One can also define the initial state via $\langle x_1 | \boldsymbol{p}_1 := \mathbb{P}(x_1)$. From these objects, one can reproduce the joint statistics faithfully via the memoryless dynamical model expressed in Eq. (2).

A.2 Sub-Statistics of Memoryless Classical Processes

Here, we prove Cor. 1 of the main text:

Corollary 1. *All sub-statistics of a memoryless classical process are Markovian and the corresponding conditional probabilities are mutually compatible.*

For the proof, consider a memoryless process on $\mathcal{T}_n = \{t_1, \dots, t_n\}$ and an arbitrary sub-statistics where the experimenter measures at time t_j and any subset of earlier times $\Gamma^{(i)}$ (with corresponding sequence of outcomes $\boldsymbol{x}_{\Gamma^{(i)}}$), where $t_j > t_i = \max(\Gamma^{(i)})$. Below, we both assume that $\Gamma^{(i)}$ does not 'skip times' (e.g., it can be of the form $\{t_3, t_2, t_1\}$, but not $\{t_3, t_1\}$) and that $\min(\Gamma^{(i)}) = t_1$. These assumptions are not crucial and do not affect the generality of the results, but significantly simplifies notation. We denote by M the set of all times between t_i and t_j and by F that of all times after t_j, with corresponding outcome sequences $\boldsymbol{x}_M$ and $\boldsymbol{x}_F$ and do-nothing operations $\mathcal{I}_M$ and $\mathcal{I}_F$, respectively. For convenience, we also introduce the do-nothing operation $\mathcal{I}_{FjM}$ for all times after t_i. With this, we explicitly calculate the probability of observing x_j conditioned on the sequence of previous outcomes $\boldsymbol{x}_{\Gamma^{(i)}}$ as

$$
\begin{aligned}
\mathbb{P}(x_j|\boldsymbol{x}_{\Gamma^{(i)}}) &= \frac{\mathbb{P}(\mathcal{I}_F, x_j, \mathcal{I}_M, x_i, \dots, x_1)}{\mathbb{P}(\mathcal{I}_{FjM}, x_i, \dots, x_1)} \\
&= \frac{\sum_{\boldsymbol{x}_F \boldsymbol{x}_M} \mathbb{P}(x_n, \dots, x_1)}{\sum_{\boldsymbol{x}_F x_j \boldsymbol{x}_M} \mathbb{P}(x_n, \dots, x_1)} \\
&= \frac{\sum_{\boldsymbol{x}_F \boldsymbol{x}_M} \mathbb{P}(x_n|x_{n-1}) \dots \mathbb{P}(x_2|x_1)}{\sum_{\boldsymbol{x}_F x_j \boldsymbol{x}_M} \mathbb{P}(x_n|x_{n-1}) \dots \mathbb{P}(x_2|x_1)} \\
&= \frac{\left[\sum_{\boldsymbol{x}_F} \mathbb{P}(x_n|x_{n-1}) \dots \mathbb{P}(x_{j+1}|x_j)\right] \left[\sum_{\boldsymbol{x}_M} \mathbb{P}(x_j|x_{j-1}) \dots \mathbb{P}(x_{i+1}|x_i)\right] \{\mathbb{P}(x_i|x_{i-1}) \dots \mathbb{P}(x_2|x_1)\}}{\left[\sum_{\boldsymbol{x}_F x_j \boldsymbol{x}_M} \mathbb{P}(x_n|x_{n-1}) \dots \mathbb{P}(x_{i+1}|x_i)\right] \{\mathbb{P}(x_i|x_{i-1}) \dots \mathbb{P}(x_2|x_1)\}} \\
&= \sum_{\boldsymbol{x}_M} \mathbb{P}(x_j|x_{j-1}) \dots \mathbb{P}(x_{i+1}|x_i) =: \mathbb{P}(x_j|x_i),
\end{aligned} \tag{12}
$$

where in the second line we employed the marginalisation rule to compute the sub-statistics from the full process on $\mathcal{T}_n$, in the third line we invoked the Markovianity condition (on the full statistics), in the fourth line we split the sums into independent parts, in the fifth line we used the fact that the first sum in the numerator and the sum in the denominator both evaluate to unity, and the final line only depends on x_j and x_i and satisfies the properties of a conditional probability distribution. Thus we see that any sub-statistics of a memoryless classical stochastic process are also Markovian, i.e., $\mathbb{P}(x_j|\boldsymbol{x}_{\Gamma^{(i)}}) = \mathbb{P}(x_j|x_i)$ for all $t_j > t_i$. As mentioned, this reasoning also holds for more 'complicated' sets $\Gamma^{(i)}$, albeit with a slightly more cumbersome notation than used in the proof above.

Moreover, the Markovian sub-statistics are compatible in the sense that it does not matter what occurred at any time prior to that of the most recent conditioning argument, i.e., t_i. For instance, if one computes $\mathbb{P}(x_j|x_i, \mathcal{I}_{i-1:\ell+1}, x_\ell, \mathcal{I}_{\ell-1:1})$, this should also be independent of x_ℓ (i.e., Markovian sub-statistics) *and* equal to $\mathbb{P}(x_j|\boldsymbol{x}_{\Gamma^{(i)}}) = \mathbb{P}(x_j|x_i)$ computed above (i.e., compatible). This can be seen by noting that for any historic sequence (of either measuring or not at any times $t_1, \dots, t_{i-1}$, which we denote with $(x \cup \mathcal{I})_{i-1:1}$), the logic of Eq. (12) holds, since the only changes would appear in the terms in curly parentheses in the fourth line, which always cancel. Hence, we have the compatibility $\mathbb{P}(x_j|x_i, (x \cup \mathcal{I})_{i-1:1}) = \mathbb{P}(x_j|x_i)$ for all possible combinations of measuring or not in the history leading up to time t_i. Again, this argument can be run in exactly the same vein for any two subsets of times $\Gamma^{(i)}$ and $\Gamma^{(i)\prime}$ satisfying $\max(\Gamma^{(i)}) = \max(\Gamma^{(i)\prime}) = t_i$, with the result that $\mathbb{P}(x_j|\boldsymbol{x}_{\Gamma^{(i)}}) = \mathbb{P}(x_j|\boldsymbol{x}_{\Gamma^{(i)\prime}}) = \mathbb{P}(x_j|x_i)$ for all $t_j > t_i$.

B Quantum Processes

B.1 Memoryless Quantum Processes and Markovian Statistics

Here, we prove Lem. 1 of the main text:

Lemma 1. *Any memoryless quantum process leads to Markovian statistics (for sharp, projective measurements).*

Beginning with Eq. (6), we have that for any memoryless quantum process

$$\mathbb{P}(x_n, \ldots, x_1) = \mathrm{tr}\left[\mathcal{P}_n^{(x_n)} \Lambda_{n:n-1} \ldots \Lambda_{2:1} \mathcal{P}_1^{(x_1)} \rho_1\right] , \tag{13}$$

where $\{\Lambda_{j:j-1}\}$ are mutually independent CPTP maps, ρ_1 is an initial quantum state, and $\mathcal{P}_j^{(x_j)}[\bullet] = |x_j\rangle\langle x_j| \bullet |x_j\rangle\langle x_j|$. The statistics up to any time t_j is given by $\mathbb{P}(\mathcal{I}_{n:j+1}, x_j, \ldots, x_1) =: \mathbb{P}(x_j, \ldots, x_1) = \mathrm{tr}\left[\mathcal{P}_j^{(x_j)} \Lambda_{j:j-1} \ldots \Lambda_{2:1} \mathcal{P}_1^{(x_1)} \rho_1\right]$ (this can be seen either by direct computation or by invoking causality), where $\mathcal{I}_{n:j+1}$ denotes 'do-nothing' operations from t_j to t_n. With this, computing the conditional probability for an arbitrary time t_j given the entire sequence of historic outcomes up until that time explicitly gives

$$\begin{aligned}
\mathbb{P}(x_j|x_{j-1}, \ldots, x_1) &= \frac{\mathrm{tr}\left[\mathcal{P}_j^{(x_j)} \Lambda_{j:j-1} \ldots \Lambda_{2:1} \mathcal{P}_1^{(x_1)} \rho_1\right]}{\mathrm{tr}\left[\mathcal{P}_{j-1}^{(x_{j-1})} \Lambda_{j-1:j-2} \ldots \Lambda_{2:1} \mathcal{P}_1^{(x_1)} \rho_1\right]} \\
&= \frac{\mathrm{tr}\left[\sum_\ell |x_j\rangle\langle x_j| L_{j:j-1}^\ell |x_{j-1}\rangle\langle x_{j-1}| \left(\Lambda_{j-1:j-2} \ldots \Lambda_{2:1} \mathcal{P}_1^{(x_1)} \rho_1\right) |x_{j-1}\rangle\langle x_{j-1}| L_{j:j-1}^{\ell\dagger} |x_j\rangle\langle x_j|\right]}{\mathrm{tr}\left[|x_{j-1}\rangle\langle x_{j-1}| \left(\Lambda_{j-1:j-2} \ldots \Lambda_{2:1} \mathcal{P}_1^{(x_1)} \rho_1\right) |x_{j-1}\rangle\langle x_{j-1}|\right]} \\
&= \frac{\sum_\ell \langle x_j| L_{j:j-1}^\ell |x_{j-1}\rangle\langle x_{j-1}| L_{j:j-1}^{\ell\dagger} |x_j\rangle \langle x_{j-1}| \left(\Lambda_{j-1:j-2} \ldots \Lambda_{2:1} \mathcal{P}_1^{(x_1)} \rho_1\right) |x_{j-1}\rangle}{\langle x_{j-1}| \left(\Lambda_{j-1:j-2} \ldots \Lambda_{2:1} \mathcal{P}_1^{(x_1)} \rho_1\right) |x_{j-1}\rangle} \\
&= \sum_\ell \langle x_j| L_{j:j-1}^\ell |x_{j-1}\rangle\langle x_{j-1}| L_{j:j-1}^{\ell\dagger} |x_j\rangle \\
&= \langle x_j| \Lambda_{j:j-1}[|x_{j-1}\rangle\langle x_{j-1}|] |x_j\rangle,
\end{aligned} \tag{14}$$

where we wrote $\Lambda_{j:j-1}[\bullet] := \sum_\ell L_{j:j-1}^\ell \bullet L_{j:j-1}^{\ell\dagger}$ in Kraus operator form in the second line, and then made use of the cyclicity of the trace and the fact that the measurements are sharp (rank-1) projectors in the third line (importantly, if the projectors are not rank-1, corresponding, e.g., to the measurement of an observable with degeneracies, then memoryless processes do *not* necessarily lead to Markovian statistics [37, 51], since in this case the state after the measurement is not fully determined by the outcome; this fact is also true in the classical setting). This expression is independent of all $x_1, \ldots, x_{j-2}$ and therefore the conditional probabilities are Markovian. We now show that it is indeed equivalent to the conditional probability $\mathbb{P}(x_j|x_{j-1}, \mathcal{I}_{j-2:1}) =: \mathbb{P}(x_j|x_{j-1})$, where the experimenter does *not* measure at all on times $t_1, \ldots, t_{j-2}$. Explicitly, we have

$$\begin{aligned}
\mathbb{P}(x_j|x_{j-1}) &= \frac{\mathrm{tr}\left[\mathcal{P}_j^{(x_j)} \Lambda_{j:j-1} \mathcal{P}_{j-1}^{(x_{j-1})} \Lambda_{j-1:j-2} \mathcal{I}_{j-2} \ldots \Lambda_{2:1} \mathcal{I}_1 \rho_1\right]}{\mathrm{tr}\left[\mathcal{P}_{j-1}^{(x_{j-1})} \Lambda_{j-1:j-2} \mathcal{I}_{j-2} \ldots \Lambda_{2:1} \mathcal{I}_1 \rho_1\right]} \\
&= \frac{\mathrm{tr}\left[\sum_\ell |x_j\rangle\langle x_j| L_{j:j-1}^\ell |x_{j-1}\rangle\langle x_{j-1}| \left(\Lambda_{j-1:j-2} \mathcal{I}_{j-2} \ldots \Lambda_{2:1} \mathcal{I}_1 \rho_1\right) |x_{j-1}\rangle\langle x_{j-1}| L_{j:j-1}^{\ell\dagger} |x_j\rangle\langle x_j|\right]}{\mathrm{tr}\left[|x_{j-1}\rangle\langle x_{j-1}| \left(\Lambda_{j-1:j-2} \mathcal{I}_{j-2} \ldots \Lambda_{2:1} \mathcal{I}_1 \rho_1\right) |x_{j-1}\rangle\langle x_{j-1}|\right]} \\
&= \frac{\sum_\ell \langle x_j| L_{j:j-1}^\ell |x_{j-1}\rangle\langle x_{j-1}| L_{j:j-1}^{\ell\dagger} |x_j\rangle \langle x_{j-1}| \left(\Lambda_{j-1:j-2} \mathcal{I}_{j-2} \ldots \Lambda_{2:1} \mathcal{I}_1 \rho_1\right) |x_{j-1}\rangle}{\langle x_{j-1}| \left(\Lambda_{j-1:j-2} \mathcal{I}_{j-2} \ldots \Lambda_{2:1} \mathcal{I}_1 \rho_1\right) |x_{j-1}\rangle}
\end{aligned}$$

$$= \sum_{\ell} \langle x_j | L^{\ell}_{j:j-1} | x_{j-1} \rangle \langle x_{j-1} | L^{\ell\dagger}_{j:j-1} | x_j \rangle$$
$$= \langle x_j | \Lambda_{j:j-1}[|x_{j-1}\rangle\langle x_{j-1}|] | x_j \rangle. \tag{15}$$

Thus, we see that the conditional statistics in both situations above coincide and are indeed Markovian $\mathbb{P}(x_j|x_{j-1},\dots,x_1) = \mathbb{P}(x_j|x_{j-1},\mathcal{I}_{j-2:1}) = \mathbb{P}(x_j|x_{j-1}) = \langle x_j|\Lambda_{j:j-1}[|x_{j-1}\rangle\langle x_{j-1}|]|x_j\rangle$.

B.2 Sub-Statistics of Memoryless Quantum Processes

Here, we prove Lem. 2 from the main text:

Lemma 2. *Any memoryless quantum process leads to Markovian sub-statistics (for sharp, projective measurements) that are mutually compatible.*

Similar to App. A.2, we will restrict the discussion again to subsets of $\mathcal{T}_n$ of the form $\Gamma^{(i)} = \{t_1,\dots,t_i\}$ and show that $\mathbb{P}(x_j|\boldsymbol{x}_{\Gamma^{(i)}}) = \mathbb{P}(x_j|x_i)$ holds for all $t_j > t_i$ and $t_i = \max(\Gamma^{(i)})$. Let $\mathcal{I}_{j-1:i+1}$ denote the 'do-nothing' operation at all times between t_i and t_j. With this, we obtain

$$\mathbb{P}(x_j|\mathcal{I}_{j-1:i+1},\boldsymbol{x}_{\Gamma^{(i)}}) = \frac{\mathrm{tr}\left[\mathcal{P}_j^{(x_j)}\Lambda_{j:j-1}\mathcal{I}_{j-1}\Lambda_{j-1:j-2}\dots\mathcal{I}_{i+1}\Lambda_{i+1:i}\mathcal{P}_i^{(x_i)}\Lambda_{i:i-1}\mathcal{P}_{i-1}^{(x_{i-1})}\dots\mathcal{P}_1^{(x_1)}\rho_1\right]}{\mathrm{tr}\left[\mathcal{P}_i^{(x_i)}\Lambda_{i:i-1}\mathcal{P}_{i-1}^{(x_{i-1})}\dots\mathcal{P}_1^{(x_1)}\rho_1\right]}$$
$$= \frac{\langle x_j|\Lambda_{j:j-1}\mathcal{I}_{j-1}\Lambda_{j-1:j-2}\dots\mathcal{I}_{i+1}\Lambda_{i+1:i}[|x_i\rangle\langle x_i|]|x_j\rangle\langle x_i|\Lambda_{i:i-1}\mathcal{P}_{i-1}^{(x_{i-1})}\dots\mathcal{P}_1^{(x_1)}\rho_1|x_i\rangle}{\langle x_i|\Lambda_{i:i-1}\mathcal{P}_{i-1}^{(x_{i-1})}\dots\mathcal{P}_1^{(x_1)}\rho_1|x_i\rangle}$$
$$= \langle x_j|\Lambda_{j:j-1}\mathcal{I}_{j-1}\Lambda_{j-1:j-2}\dots\mathcal{I}_{i+1}\Lambda_{i+1:i}[|x_i\rangle\langle x_i|]|x_j\rangle \quad \forall\ x_{i-1},\dots,x_1. \tag{16}$$

In the case where *no* measurements are made until time t_i, we similarly have

$$\mathbb{P}(x_j|\mathcal{I}_{j-1:i+1},x_i,\mathcal{I}_{i-1:1}) = \frac{\mathrm{tr}\left[\mathcal{P}_j^{(x_j)}\Lambda_{j:j-1}\mathcal{I}_{j-1}\Lambda_{j-1:j-2}\dots\mathcal{I}_{i+1}\Lambda_{i+1:i}\mathcal{P}_i^{(x_i)}\Lambda_{i:i-1}\mathcal{I}_{i-1}\dots\mathcal{I}_1\rho_1\right]}{\mathrm{tr}\left[\mathcal{P}_k^{(x_i)}\Lambda_{i:i-1}\mathcal{I}_{i-1}\dots\mathcal{I}_1\rho_1\right]}$$
$$= \frac{\langle x_j|\Lambda_{j:j-1}\mathcal{I}_{j-1}\Lambda_{j-1:j-2}\dots\mathcal{I}_{i+1}\Lambda_{i+1:i}[|x_i\rangle\langle x_i|]|x_j\rangle\langle x_i|\Lambda_{i:i-1}\mathcal{I}_{i-1}\dots\mathcal{I}_1\rho_1|x_i\rangle}{\langle x_i|\Lambda_{i:i-1}\mathcal{I}_{i-1}\dots\mathcal{I}_1\rho_1|x_i\rangle}$$
$$= \langle x_j|\Lambda_{j:j-1}\mathcal{I}_{j-1}\Lambda_{j-1:j-2}\dots\mathcal{I}_{i+1}\Lambda_{i+1:i}[|x_i\rangle\langle x_i|]|x_j\rangle. \tag{17}$$

Thus, we see that both conditional probabilities are equal and independent of all measurement outcomes prior to t_i i.e., we have $\mathbb{P}(x_j|\mathcal{I}_{j-1:i+1},x_i,x_{i-1},\dots,x_1) = \mathbb{P}(x_j|\mathcal{I}_{j-1:i+1},x_i,\mathcal{I}_{i-1:1}) =: \mathbb{P}(x_j|x_i)$ and the sub-statistics are indeed Markovian. Regarding consistency, note that for any combination of measuring or not in the times prior to t_i, the only changes to the above expressions occur in the numerator term that always cancels with the corresponding part in the denominator, and so compatibility holds true, i.e., $\mathbb{P}(x_j|\mathcal{I}_{j-1:i+1},x_i,(x\cup\mathcal{I})_{i-1:1}) = \mathbb{P}(x_j|x_i)$ for all possible choices of $(x\cup\mathcal{I})_{i-1:1}$, i.e., all possible choices of measuring or not at times $\{t_1,\dots,t_{i-1}\}$ in the history. As for the classical case we demonstrated in App. A.2, the argument above can be run in exactly the same way for more 'complicated' subsets $\Gamma^{(i)} \subset \mathcal{T}_n$, with the only difference that the notation becomes slightly more cumbersome.

C Hidden Quantum Memory and Incompatibility

C.1 Hidden Quantum Memory

Here we explicitly calculate all sub-statistics of the example used regarding Thm. 1 and show that, while the full statistics is Markovian, there are non-Markovian sub-statistics, i.e., we uncover hidden quantum memory. This phenomenon acts as a witness to the impossibility of a memoryless quantum

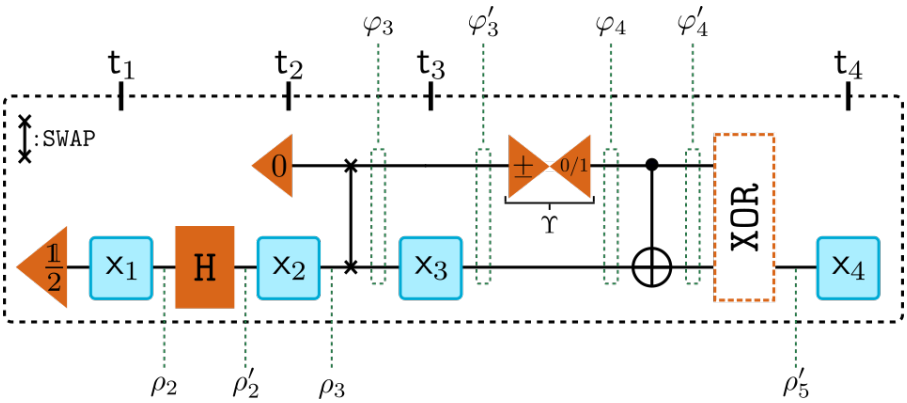

Figure 3: *Circuit with hidden quantum memory/incompatible Markovian statistics.* For convenience, we reproduce the circuit provided in Fig. 2 in the main text. Additionally, to better facilitate orientation, the states that are explicitly mentioned throughout the proof are marked in green, i.e., the points in the circuit where the states $\rho_2, \rho_2', \rho_3, \varphi_3, \ldots$ occur. For the proof of Thm. 1, the final XOR gate is not part of the circuit, but it is included in the proof of Thm. 2.

process description by way of contradiction with (the first part of) Lem. 2, which states that any memoryless process leads to Markovian sub-statistics. The circuit corresponding to the process we discuss is shown in Fig. 3, where, for convenience, the states we explicitly calculate in the discussion below are annotated.

We begin with the full statistics. The probability over measurement outcomes at time t_1 are set by the initial state of the process, i.e.,

$$\mathbb{P}(x_1) = \mathrm{tr}\left[|x_1\rangle\langle x_1|\rho_1\right], \tag{18}$$

with the post-measurement (subnormalised) state $\rho_2(x_1) = \mathbb{P}(x_1)|x_1\rangle\langle x_1|$; without loss of generality, we choose $\rho_1 = \frac{\mathbb{1}}{2}$ and thereby set $\mathbb{P}(x_1 = 0) = \mathbb{P}(x_1 = 1) = \frac{1}{2}$. The process then consists of a Hadamard gate, which rotates said post-measurement state (which is diagonal in the σ_z-basis) to the σ_x-basis, and we have

$$\rho_2'(x_1) := H\rho_2(x_1)H = \begin{cases} \frac{1}{2}|+\rangle\langle+| & \text{for } x_1 = 0 \\ \frac{1}{2}|-\rangle\langle-| & \text{for } x_1 = 1. \end{cases} \tag{19}$$

The experimenter then measures this state again in the computational (σ_z) basis, yielding the joint two-time statistics

$$\mathbb{P}(x_2, x_1) = \frac{1}{4} \quad \forall\, x_2, x_1. \tag{20}$$

The state after the second measurement is independent of x_1 and given by

$$\rho_3(x_2, x_1) = \frac{1}{4}|x_2\rangle\langle x_2| \quad \forall\, x_2, x_1. \tag{21}$$

This state is then swapped with the environment, which is prepared in an arbitrary fiducial state τ, which we set as the blank state $|0\rangle$. The joint system-environment state φ_3 immediately prior to the measurement at t_3 is given by

$$\varphi_3(x_2, x_1) = \texttt{SWAP}[\rho_3(x_2, x_1) \otimes \tau] = \tau \otimes \rho_3(x_2, x_1) = \frac{1}{4}|0\rangle\langle 0| \otimes |x_2\rangle\langle x_2|. \tag{22}$$

The experimenter then measures the system at time t_3, recording the probabilities

$$\mathbb{P}(x_3, x_2, x_1) = \begin{cases} \frac{1}{4} & \text{for } x_3 = 0 \\ 0 & \text{for } x_3 = 1 \end{cases} \quad \forall\, x_2, x_1. \tag{23}$$

This distribution is Markovian, as we have the conditional probabilities

$$\mathbb{P}(x_3|x_2,x_1) = \begin{cases} 1 & \text{for } x_3 = 0 \\ 0 & \text{for } x_3 = 1 \end{cases} \quad \forall\, x_2, x_1, \tag{24}$$

which is independent of x_1 [indeed, the statistics are 'super'-Markovian as the conditional probabilities are also independent of x_2, so we have $\mathbb{P}(x_3|x_2,x_1) = \mathbb{P}(x_3|x_2) = \mathbb{P}(x_3)$]. The system-environment state $\varphi_3'(x_3,x_2,x_1)$ following the measurement at t_3 is

$$\varphi_3'(x_3,x_2,x_1) = (\mathcal{P}_3^{(x_3)} \otimes \mathcal{I})[\varphi_3(x_2,x_1)] = \frac{1}{4}|0\rangle\langle 0| \otimes |x_2\rangle\langle x_2|, \tag{25}$$

i.e., the measurement at t_3 is non-invasive (note that the outcome $x_3 = 1$ cannot occur). Subsequently, a channel occurs that measures the environment in the σ_x-basis and feeds forward $|0\rangle$ ($|1\rangle$) whenever the measurement outcome is $+$ ($-$). The corresponding CPTP map is given by $\Upsilon[\,\bullet\,] = \sum_k Y^k \bullet Y^{k\dagger}$ with Kraus operators $Y^0 = |0\rangle\langle +|$ and $Y^1 = |1\rangle\langle -|$. Since $\langle \pm|x_2\rangle\langle x_2|\pm\rangle = \frac{1}{2}\,\forall\, x_2$, this yields the system-environment state

$$\varphi_4(x_3,x_2,x_1) = (\mathcal{I} \otimes \Upsilon)[\varphi_3'(x_3,x_2,x_1)] = \frac{1}{8}|0\rangle\langle 0| \otimes \mathbb{1}. \tag{26}$$

After this, a `CNOT` gate on system and environment occurs (with the environment qubit acting as control), leading to

$$\varphi_4'(x_3,x_2,x_1) = \texttt{CNOT}[\varphi_4(x_3,x_2,x_1)] = \frac{1}{16}\mathbb{1} \otimes \mathbb{1}. \tag{27}$$

The experimenter performs the final measurement at t_4, recording the probabilities

$$\mathbb{P}(x_4,x_3,x_2,x_1) = \begin{cases} \frac{1}{8} & \text{for } x_3 = 0 \\ 0 & \text{for } x_3 = 1 \end{cases} \quad \forall\, x_4, x_2, x_1. \tag{28}$$

This distribution is indeed Markovian, as the conditional probabilities are

$$\mathbb{P}(x_4|x_3,x_2,x_1) = \begin{cases} \frac{1}{2} & \text{for } x_3 = 0 \\ 0 & \text{for } x_3 = 1 \end{cases} \quad \forall\, x_4, x_2, x_1, \tag{29}$$

[where we take the convention that conditioning on an event that cannot occur (i.e., $x_3 = 1$) gives conditional probability 0]. Thus, the full joint statistics $\mathbb{P}(x_4,x_3,x_2,x_1)$ is Markovian.

On the other hand, consider the situation in which the experimenter does not measure at time t_2, i.e., the sub-statistics $\mathbb{P}(x_4,x_3,\mathcal{I}_2,x_1)$. Everything until Eq. (19) remains the same, but without measurement at t_2 we have the state

$$\rho_3(\mathcal{I}_2,x_1) = \mathcal{I}_2[\rho_2'(x_1)] = \frac{1}{2}\begin{cases} |+\rangle\langle +| & \text{for } x_1 = 0 \\ |-\rangle\langle -| & \text{for } x_1 = 1. \end{cases} \tag{30}$$

The system is then swapped with the environment, yielding the joint state

$$\varphi_3(\mathcal{I}_2,x_1) = \texttt{SWAP}[\rho_3(\mathcal{I}_2,x_1) \otimes \tau] = \tau \otimes \rho_3(\mathcal{I}_2,x_1) = \frac{1}{2}\begin{cases} |0\rangle\langle 0| \otimes |+\rangle\langle +| & \text{for } x_1 = 0 \\ |0\rangle\langle 0| \otimes |-\rangle\langle -| & \text{for } x_1 = 1. \end{cases} \tag{31}$$

Measurement of the system at t_3 leads to the joint statistics

$$\mathbb{P}(x_3,\mathcal{I}_2,x_1) = \begin{cases} \frac{1}{2} & \text{for } x_3 = 0 \\ 0 & \text{for } x_3 = 1 \end{cases} \quad \forall\, x_1. \tag{32}$$

Thus, we have the conditional probabilities

$$\mathbb{P}(x_3|\mathcal{I}_2, x_1) = \begin{cases} 1 & \text{for } x_3 = 0 \\ 0 & \text{for } x_3 = 1 \end{cases} \quad \forall\, x_1. \tag{33}$$

The system-environment state $\varphi_3'(x_3, \mathcal{I}_2, x_1)$ following the measurement at t_3 is

$$\varphi_3'(x_3, \mathcal{I}_2, x_1) = (\mathcal{P}_3^{(x_3)} \otimes \mathcal{I})[\varphi_3(\mathcal{I}_2, x_1)] = \frac{1}{2} \begin{cases} |0\rangle\langle 0| \otimes |+\rangle\langle +| & \text{for } x_1 = 0 \\ |0\rangle\langle 0| \otimes |-\rangle\langle -| & \text{for } x_1 = 1. \end{cases} \tag{34}$$

After the map Υ on the environment, we have the system-environment state

$$\begin{aligned} \varphi_4'(x_3, \mathcal{I}_2, x_1) = (\mathcal{I} \otimes \Upsilon)[\varphi_3'(x_3, \mathcal{I}_2, x_1)] &= \frac{1}{2} \begin{cases} |0\rangle\langle 0| \otimes |0\rangle\langle 0| & \text{for } x_1 = 0 \\ |0\rangle\langle 0| \otimes |1\rangle\langle 1| & \text{for } x_1 = 1 \end{cases} \\ &= \frac{1}{2} |0\rangle\langle 0| \otimes |x_1\rangle\langle x_1|. \end{aligned} \tag{35}$$

Upon application of the CNOT gate, the system-environment state is

$$\varphi_4'(x_3, \mathcal{I}_2, x_1) = \texttt{CNOT}[\varphi_4(x_3, \mathcal{I}_2, x_1)] = \frac{1}{2} |x_1\rangle\langle x_1| \otimes |x_1\rangle\langle x_1|. \tag{36}$$

The experimenter finally performs the measurement at t_4, recording the statistics

$$\mathbb{P}(x_4, x_3, \mathcal{I}_2, x_1) = \begin{cases} \frac{1}{2}\delta_{x_4 x_1} & \text{for } x_3 = 0 \\ 0 & \text{for } x_3 = 1. \end{cases} \tag{37}$$

This sub-statistics is, however, non-Markovian, since the conditional probability at time t_4 depends on x_1. Explicitly, we have

$$\mathbb{P}(x_4|x_3, \mathcal{I}_2, x_1) = \frac{\mathbb{P}(x_4, x_3, \mathcal{I}_2, x_1)}{\mathbb{P}(x_3, \mathcal{I}_2, x_1)} = \begin{cases} \delta_{x_4 x_1} & \text{for } x_3 = 0 \\ 0 & \text{for } x_3 = 1 \end{cases} \neq \mathbb{P}(x_4|x_3). \tag{38}$$

As we have discussed in the main text, such non-Markovian sub-statistics cannot arise for a memoryless quantum process probed by sharp projective measurements (as is the case in this example), and therefore we conclude that the statistics observed—although Markovian on the whole—cannot be faithfully reproduced by a memoryless quantum process.

C.2 Incompatibility

Here we explicitly calculate all sub-statistics of the example used regarding Thm. 2 and show that although they are all Markovian (i.e., unlike in Thm. 1, there is no explicit hidden quantum memory), they are nonetheless incompatible, therefore serving to witness the impossibility of a memoryless quantum process description by way of contradiction with (the second part of) Lem. 2.

The process is the same as above, with an additional $\texttt{XOR} : |00\rangle \mapsto |0\rangle, |11\rangle \mapsto |0\rangle, |01\rangle \mapsto |1\rangle, |10\rangle \mapsto |1\rangle$. being performed on the final system-environment state, so all the statistics computed until time t_3 remain unchanged. In the case where measurements are made at all times, we have [beginning at Eq. (27)]

$$\rho_5'(x_3, x_2, x_1) = \texttt{XOR}[\varphi_4'(x_3, x_2, x_1)] = \frac{1}{8}\mathbb{1}. \tag{39}$$

The system is then measured, leading to the same joint statistics as in the earlier example [i.e., when measurements are made at each time, the XOR gate has no influence on the statistics; see Eqs. (28) and (29)]

$$\mathbb{P}(x_4, x_3, x_2, x_1) = \begin{cases} \frac{1}{8} & \text{for } x_3 = 0 \\ 0 & \text{for } x_3 = 1 \end{cases} \quad \forall\, x_4, x_2, x_1. \tag{40}$$

These statistics are indeed Markovian, as we have

$$\mathbb{P}(x_4|x_3,x_2,x_1) = \begin{cases} \frac{1}{2} & \text{for } x_3 = 0 \\ 0 & \text{for } x_3 = 1 \end{cases} \quad \forall\ x_4, x_2, x_1. \tag{41}$$

In the case of the sub-statistics where no measurement is made at time t_2, we have [starting from Eq. (36)]

$$\rho_5'(x_3, \mathcal{I}_2, x_1) = \texttt{XOR}[\varphi_4'(x_3, \mathcal{I}_2, x_1)] = \frac{1}{2}|0\rangle\langle 0|, \tag{42}$$

since the system-environment state before the XOR gate is perfectly classically correlated. The measurement at t_4 then yields the statistics

$$\mathbb{P}(x_4, x_3, \mathcal{I}_2, x_1) = \begin{cases} \frac{1}{2} & \text{for } x_4 = 0, x_3 = 0 \\ 0 & \text{for } x_4, x_3 \neq 0 \end{cases} \quad \forall\ x_1. \tag{43}$$

In contrast to the previous example, these sub-statistics are also Markovian, since we have

$$\mathbb{P}(x_4|x_3, \mathcal{I}_2, x_1) = \begin{cases} 1 & \text{for } x_4 = 0, x_3 = 0 \\ 0 & \text{for } x_4, x_3 \neq 0 \end{cases} \quad \forall\ x_1. \tag{44}$$

It is also straightforward to check that the only other relevant sub-statistics, namely $\mathbb{P}(x_4, \mathcal{I}_3, x_2, x_1)$ when the experimenter does not measure at time t_3, is also Markovian [which can be deduced from the Markovianity of the full statistics $\mathbb{P}(x_4, x_3, x_2, x_1)$ and noting that the measurement at t_3 is non-invasive, and so $\mathbb{P}(x_4, \mathcal{I}_3, x_2, x_1) = \sum_{x_3} \mathbb{P}(x_4, x_3, x_2, x_1)$].

Thus, in this example, all sub-statistics are Markovian. However, noting the discrepancy between Eqs. (41) and (44), we see that they are nonetheless incompatible: As we showed in Lem. 2, any memoryless quantum process must lead to Markovian sub-statistics that are also compatible, i.e., such that $\mathbb{P}(x_4|x_3, x_2, x_1) = \mathbb{P}(x_4|x_3, \mathcal{I}_2, x_1)$. As this is not the case here, we see a contradiction with the possibility for a memoryless description that faithfully reproduces the observed statistics.