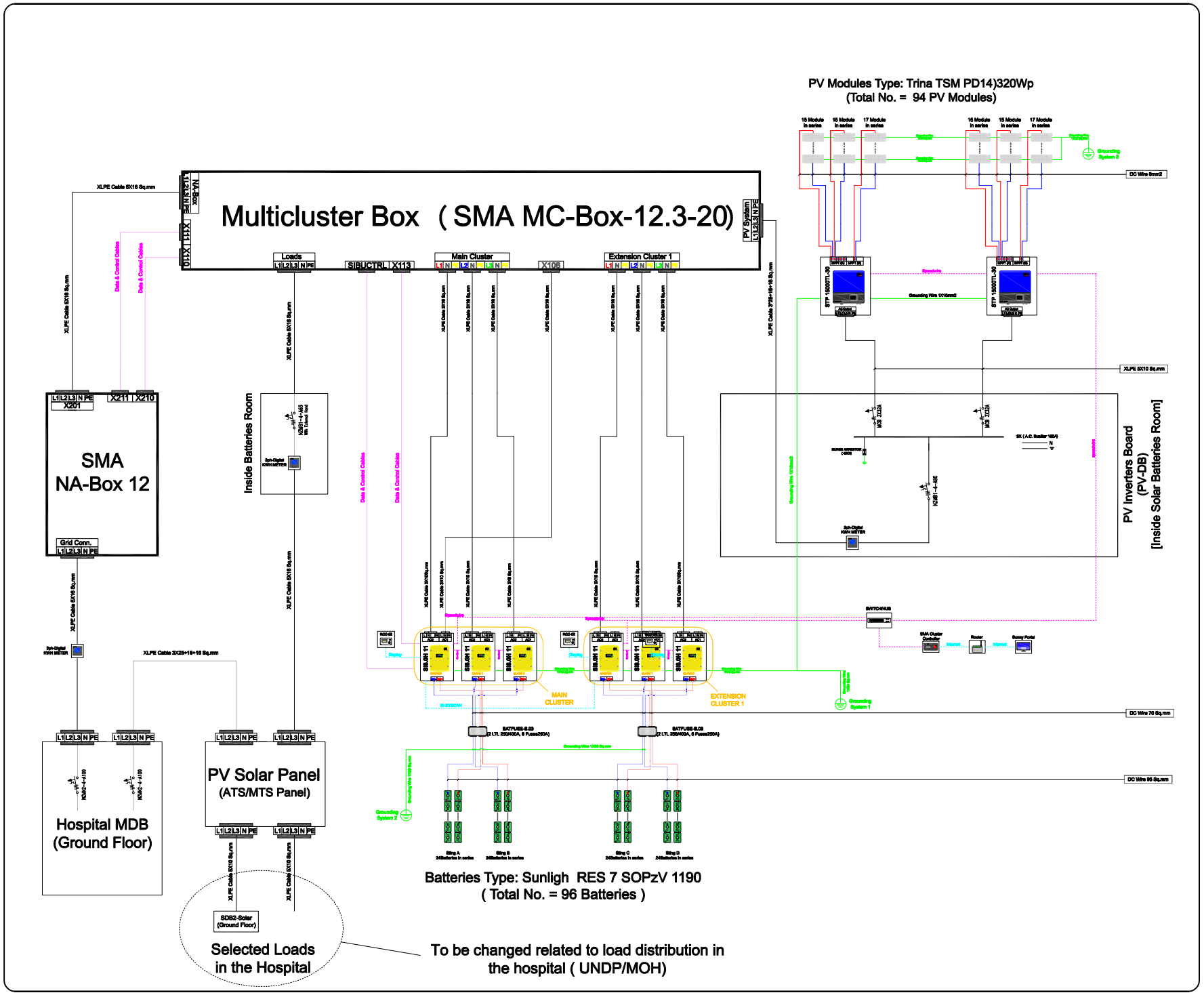

ABED EL-HAKEIM
for Trading & General
Contracting Co.

DRAWING BY

ENGINEERING OFFICE

PROJECT

Al-Andonisi Hospital Photovoltaic Cells System

DRAWING TITLE