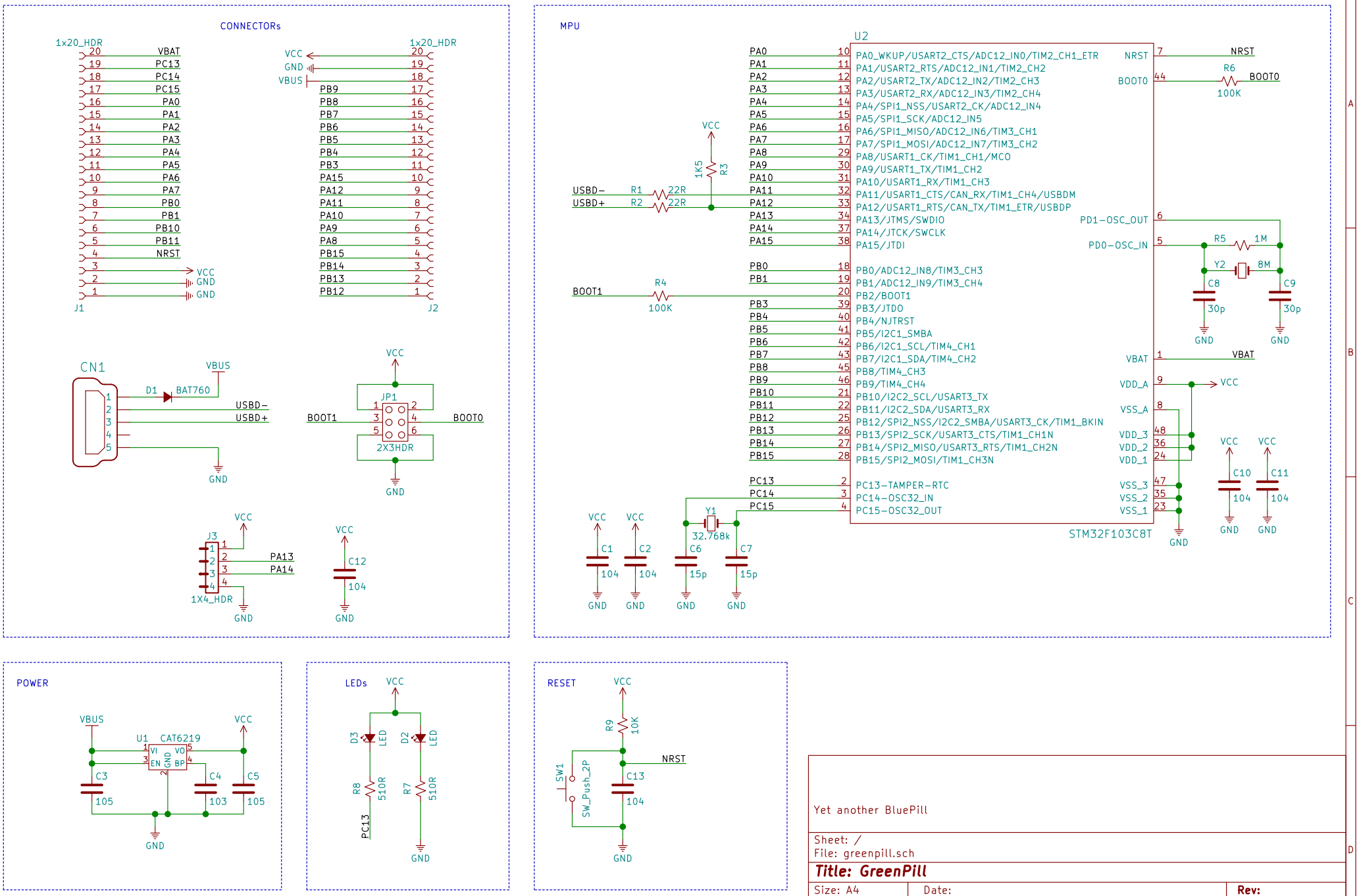

Yet another BluePill

Sheet: /
File: greenpill.sch

Title: GreenPill

Size: A4	Date:	Rev:
KiCad E.D.A. kicad (5.1.5−rc1−5−g37f23fa53)−1		Id: 1/1