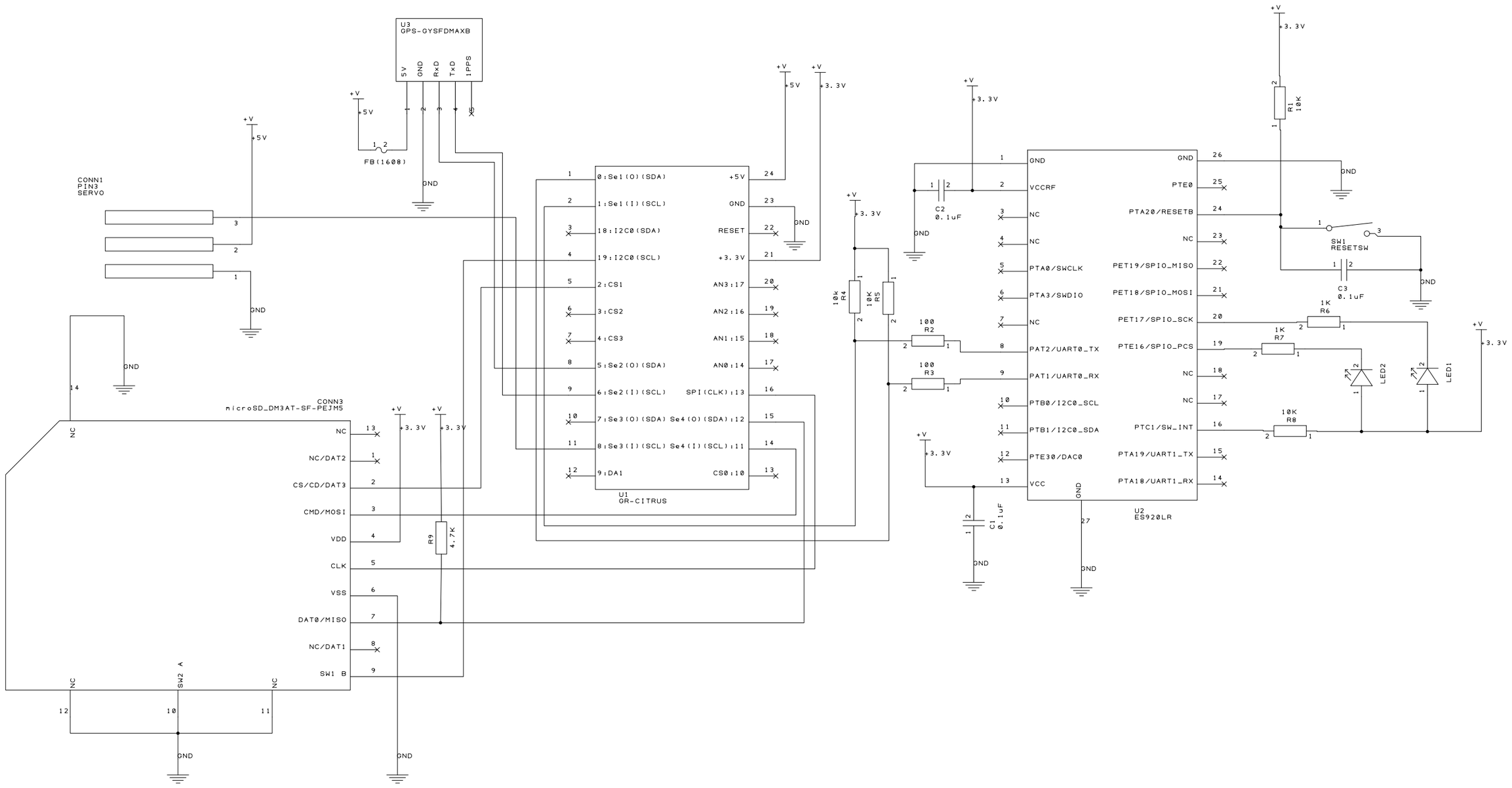

PROJECT:	DangoSat Project
DRAWING TITLE:	DangoSat
DRAWN BY:	Minao Yamamoto
REVISION:	1.2
SHEET:	1 OF 1
STATUS:	
DATE:	2020/11/13