Product Specifications

产品介绍

Decoupled Hydraulic Brake System

液压解耦线控制动系统

变更记录

版本	日期	变更人	变更内容
1	07/04/2024	Frye/Sean	草稿版
2	07/25/2024	Frye	初版
3	07/26/2024	Frye	更新ECU描述和BFLS定义
4	11/16/2024	Frye	添加中文描述.

版权

机密

版权所有

所有权属于上海利氪科技有限公司。

本信息载体及其所含信息为上海利氪科技有限公司所有。未事先经上海利氪科技有限公司（以书面形式）正式同意，其不得被使用、拷贝或透露给第三方。

上海利氪科技有限公司在全球范围内保留一切权利——包括未来获得批准的任何工业产权。这相应也适用于任何有关的口头信息。

Change Log

Version	Date	Name	Content
1	07/04/2024	Frye/Sean	Draft
2	07/25/2024	Frye	First edition release
3	07/26/2024	Frye	Update ECU description and add BFLS definition
4	11/16/2024	Frye	Add Chinese description.

Copyright

Confidential

All rights reserved

The ownership belongs to Shanghai Leekr Technology Co., Ltd.

This information carrier and the information it contains belong to Shanghai Leekr Technology Co., Ltd. Without the prior formal consent of Shanghai Leekr Technology Co., Ltd. (in writing), it may not be used, copied, or disclosed to third parties.

Shanghai Leekr Technology Co., Ltd. reserves all rights globally, including any industrial property rights approved in the future. This also applies to any related verbal information.

1 缩写/Abbreviation

缩写/Abbreviation	English Full Name	中文名称
DHB	Decoupled Hydrauic Brake System	液压解耦线控制动系统
ECU	Electronic Control Unit	电控单元
ICD	Interface Control Document	接口文档
MPS	Motor Position Sensor	电机位置传感器
BFLS	Brake Fluid Level Sensor	制动液位传感器
BPS	Brake Pressure Sensor	压力传感器
DAP	Dual Actuation Plunger	双向动作电缸

2 产品介绍/Product Introduction

2.1 概述/Summarize

液压解耦线控制动系统（以下简称DHB）是一种电控化助力液压制动系统，引入了电控单元和多种传感器，以电机为动力源，使得制动控制实现电动化。DHB可以提供非常高性能的制动响应。

Decoupled Hydraulic Brake System (DHB) is an electrically controlled hydraulic braking system, which introduces electronic control unit and a variety of sensors, and uses motor as power source to realize electric braking control. The DHB provides high performance braking response.

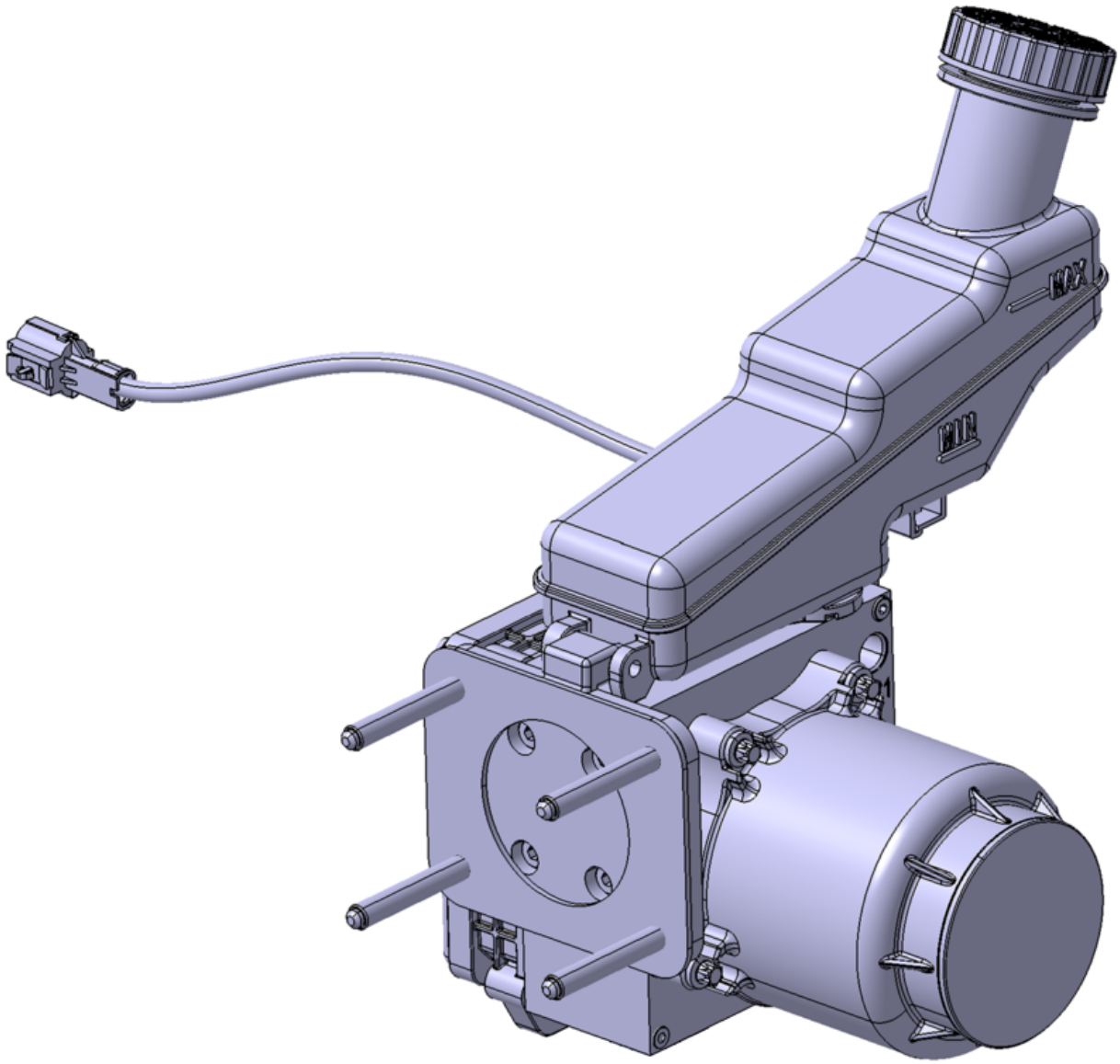

Fig.1 Decoupled Hydraulic Brake System (DHB)
图1 液压解耦线控制动系统（DHB）

注意/Note：

制动液压装置的所有零部件均将以干式供货，不带制动液。

All parts of the brake hydraulics will be supplied dry without brake fluid.

制动液/Brake Fluid：

加注符合FMVSS116的DOT3/4/5.1制动液的DHB将满足所有与控制功能有关的要求。车辆制造商所选制动液与制动系统之间的兼容性由车辆制造商负责。

DHB filled with DOT3/4/5.1 brake fluid that complies with FMVSS116 will meet all requirements related to control functions. The compatibility between the brake fluid selected by the vehicle manufacturer and the brake system is the responsibility of the vehicle manufacturer.

2.2 产品结构/Product Structure

DHB作为传统真空助力器的替代解决方案，可以接收从来自于其它ECU控制器的制动压力请求同时执行高精度压力响应，通过电机驱动DAP动作来产生液压压力。产品防水等级满足IP69。

The DHB as an alternative solution to the vacuum booster, it can receive the brake pressure command from other ECU and give high precision response in real time. The hydraulic pressure is provided by the DAP driven by the motor. The product waterproof level can meet IP69.

产品液压原理图如下图2所示：

The hydraulic schematic diagram of the product is shown in Figure 2 as below:

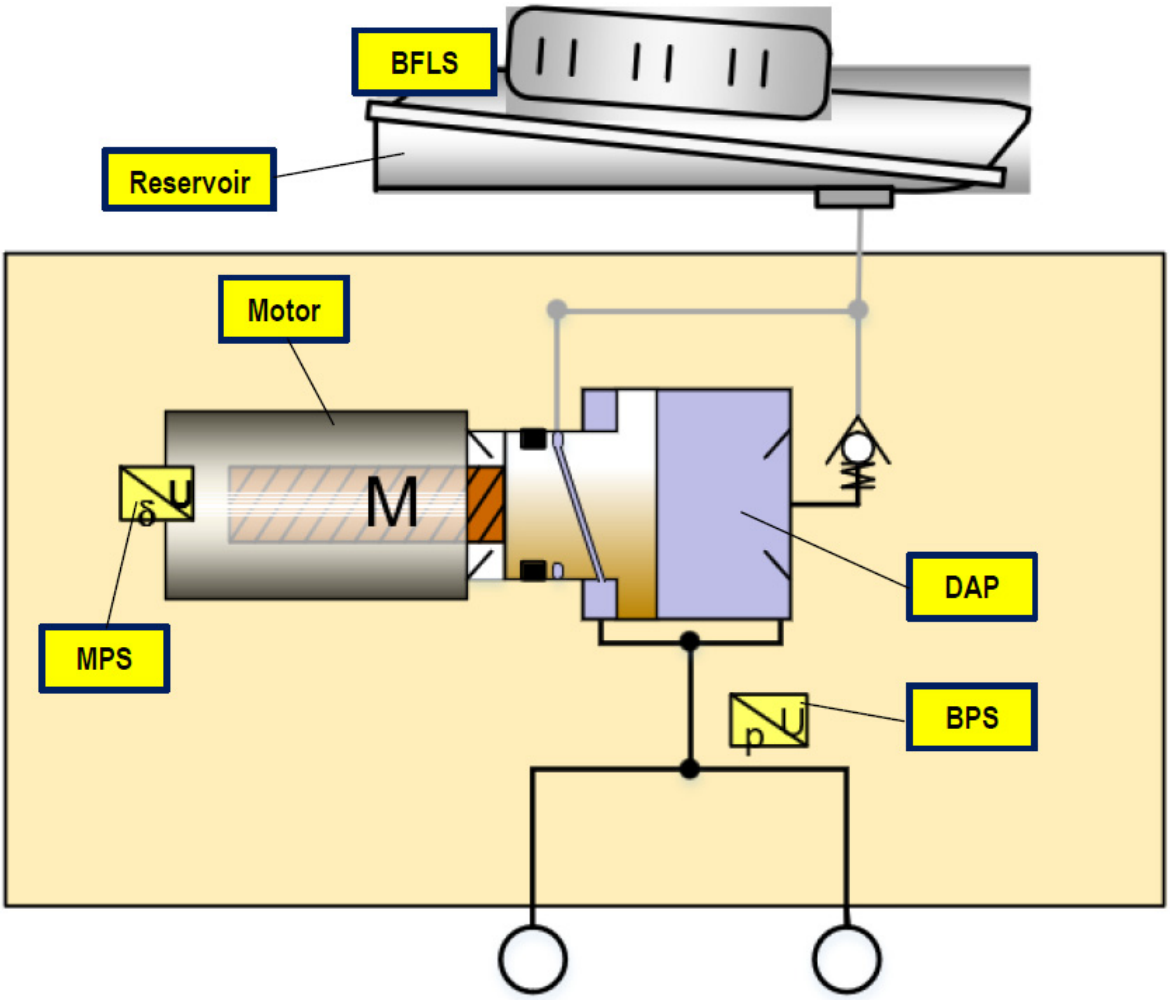

图2 DHB 液压原理图

Fig.2 DHB schematic diagram

2.2.1 电机和DAP/Motor and DAP

电机作为动力源驱动DAP的活塞，施加和释放线控制动系统的液压压力。

DAP会储存部分制动液在制动时向卡钳提供制动液产生制动压力。

- 最大电机功率：510W
- 最大耗液量：<18ccm
- 最大建压压力：160bar
- 压力执行精度： ±2bar@100bar
- 最大建压斜率: 500bar/sec @20-100bar

The motor is used as the power source to drive the piston of the DAP, to apply and release the pressure of the brake fluid of the by-wire control dynamic system.

The DAP stores a part of the brake fluid and provides the brake fluid pressure to the caliper during service braking.

- Maximum Motor Power：510W
- Maximum liquid consumption：<18ccm
- Maximum pressure：160bar
- Pressure accuracy requirement ±2bar@100bar
- Maximum Pressure Rate: 500bar/sec @20-100bar

2.2.2 储液壶/Reservoir

制动液储存在储液壶中以保证DAP中的制动液充足。

- 结构：单腔
- 体积：311ccm

The brake fluid of the braking system is stored in reservoir to ensure the sufficient amount of brake fluid in DAP.

- Structure：Single Chamber
- Volume：311ccm

2.2.3 传感器/Sensor

- 1 x DAP 压力传感器用来测量系统压力;
- 1 x 电机位置传感器, 作为电机控制的输入;
- 1 x DAP Pressure sensor to measure the system pressure;
- 1 x Motor position sensor MPS, as one of the inputs to the motor control;

2.2.4 电控单元/ECU

提供DHB的电器接口同时负责制动相关功能的逻辑控制。

- 通信：标准CAN 2.0
- 系统工作电压：9-18V
- ECU工作电压：6-27V
- 待机电流 (上电，无建压）：<300mA
- 静态电流：<200μA
- 工作电流 (建压稳态)：<50A
- 工作电流(建压瞬间) :100A Max

Provides electrical interfaces for the DHB and is responsible for the logic control of brake-related functions.

- Communicate：Standard CAN 2.0
- System Work Voltage：9-18V
- ECU Work Voltage：6-27V
- Standby Current (IGN ON, no motor actuation）：<300mA
- Quiescent Current：<200μA
- Work Current (steady state)：<50A
- Work Current (In-Rush) :100A Max

2.2.5 阀块/Valve block

DHB的液压回路以及DAP，压力传感器和其它的关键元件全部被集成在阀块中。

The hydraulic circuit of DHB is integrated inside the valve block, and the DAP, pressure sensor and other key components are integrated in the valve block.

2.3 产品安装接口/Product Installation Interface

DHB产品依靠4个M8X1.25 的螺柱安装于车内防火墙上。

（油壶可根据项目要求选择其他尺寸，图示尺寸供参考）

DHB products rely on four M8 x 1.25 studs mounted on the interior firewall.

(The reservoir can be selected according to the project requirements of other sizes, the size shown for reference).

注意/Note：

DHB安装角度倾斜不能超过15°

DHB installation Angle: cannot exceed 15°

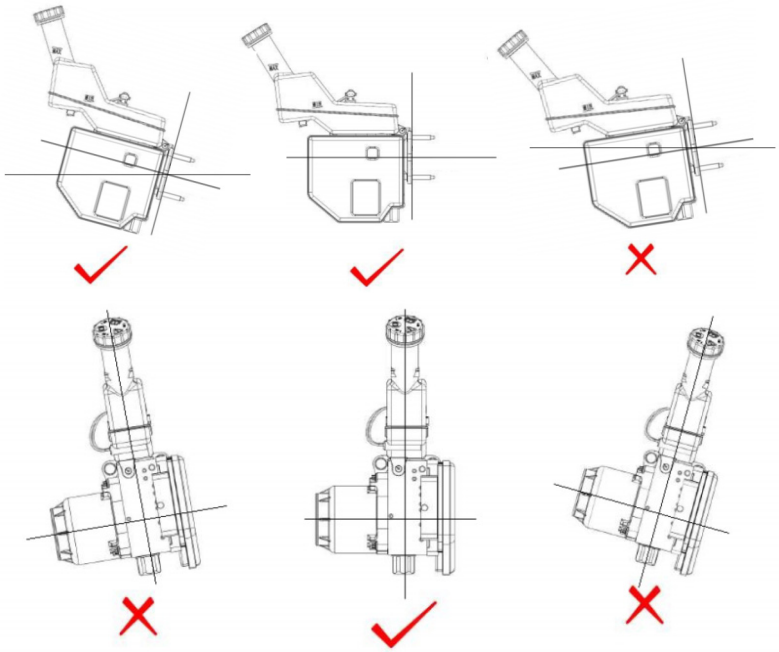

- 螺栓打紧力矩: 24±3Nm, 左上 -> 右下 -> 左下 -> 右上 -> 左上
- 油管打紧力矩: 19±2Nm；
- 防火墙安装接口:
- Tightening torque for bolts: 24±3Nm, upper left -> lower right -> lower left -> upper right -> upper left
- Tightening torque for pipe: 19±2Nm；
- Firewall installation interface:

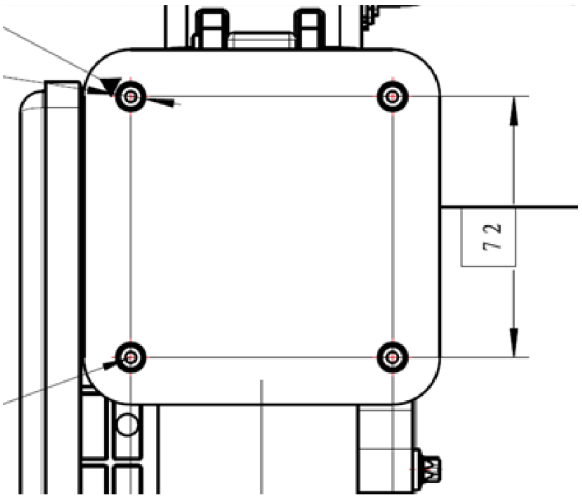

Fig.3 72mm x 72mm

2.4 电器接口/Electrical Interfaces

DHB的主连接器位于ECU内侧，使用EUCON 46pin接口，具体参见ICD表格。

- 主连接器位置:

The DHB's main connector is located inside the ECU and uses the EUCON 46pin interface, as described in the ICD table.

- Main connector position:

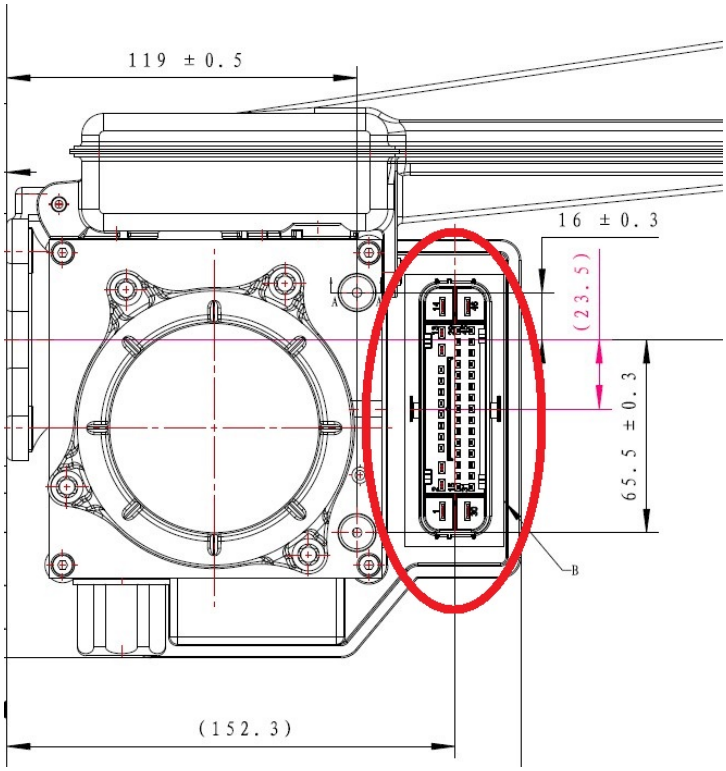

护套：(Connector cover of vehicle side)
Bosch：1928405782
端子：(Connector Terminal)
Bosch:1928498807, 1928498806, 1928C06918

- ICD PIN脚定义/ICD Pin Definition：

PIN	定义/Definition	描述/Description	线径/Wire diameter（mm2）	电流/Current
1	RGND	ECU 接地/GND	4	80A
2	-	-	-	-
3	-	-	-	-
4	-	-	-	-
5	CAN1_H	CAN1 高/High	0.5	100mA
6	-	-	-	-
7	-	-	-	-
8	-	-	-	-
9	-	-	-	-
10	-	-	-	-
11	-	-	-	-
12	-	-	-	-
13	-	-	-	-
14	KL30	ECU 电源/Power	4	80A
15	-	-	-	-
16	-	-	-	-
17	-	-	-	-
18	-	-	-	-
19	CAN1_L	CAN1 低/Low	0.5	100mA
20	-	-	-	-
21	-	-	-	-
22	-	-	-	-
23	-	-	-	-
24	-	-	-	-
25	-	-	-	-
26	-	-	-	-
27	-	-	-	-
28	-	-	-	-
29	-	-	-	-
30	-	-	-	-
31	-	-	-	-
32	-	-	-	-
33	-	-	-	-
34	-	-	-	-
35	-	-	-	-
36	KL15	唤醒/IGN Signal	0.5	100mA
37	-	-	-	-
38	-	-	-	-

39	-	-	-	-
40	-	-	-	-
41	-	-	-	-
42	-	-	-	-
43	-	-	-	-
44	-	-	-	-
45	-	-	-	-
46	-	-	-	-

制动液液位传感器/Brake Fluid Level Sensor

BFLS接插件公端通过线束连接储液壶，使用2 PIN的接口，PIN脚定义见ICD表格

The BFLS connector male terminal is connect with the reservoir by harness and uses 2pin interface, the PIN definition as described in the ICD table.

- BFLS接插件定义:

接插件母端型号: 0436605

- BFLS connector Interface:

Connector Female Terminal Type: 0436605

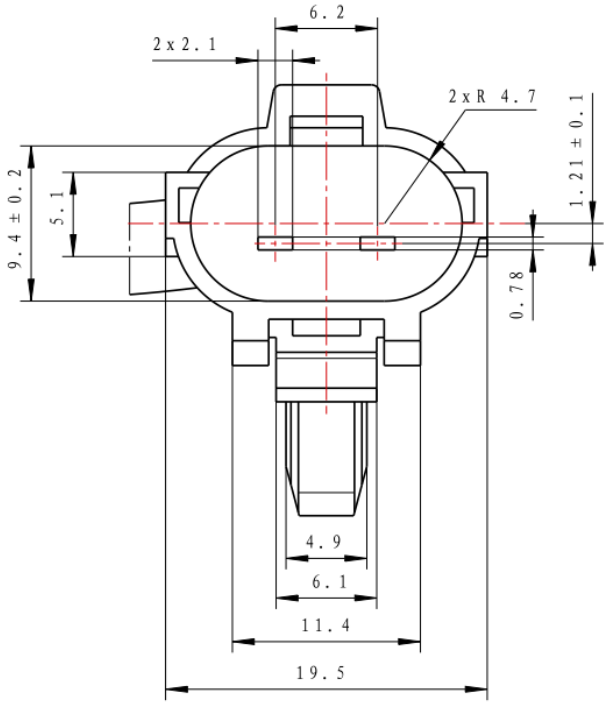

Fig.4 Connecter Male Terminal

图4 接插件公端

- ICD PIN脚定义/ICD PIN definition:

PIN	定义/Definition	描述/Description	线径/Wire diameter（mm2）	电流/Current
1	FLS_P	供电/Power Supply	0.5	12V
2	FLS_S	信号/Signal	0.5	