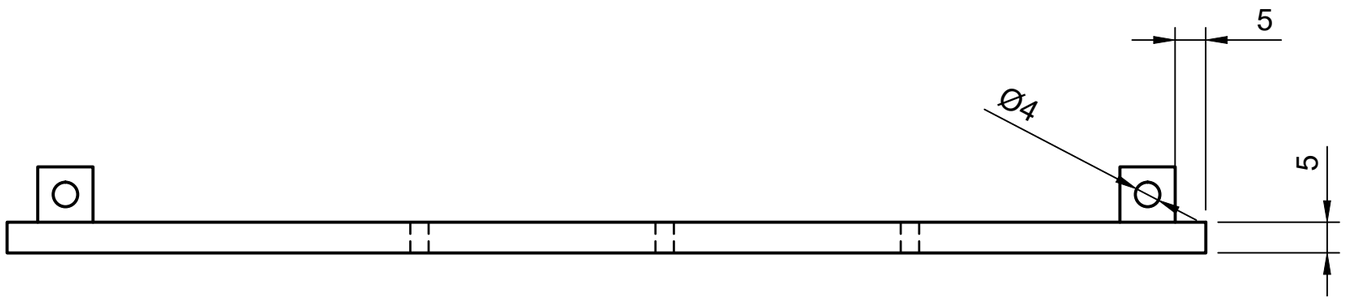

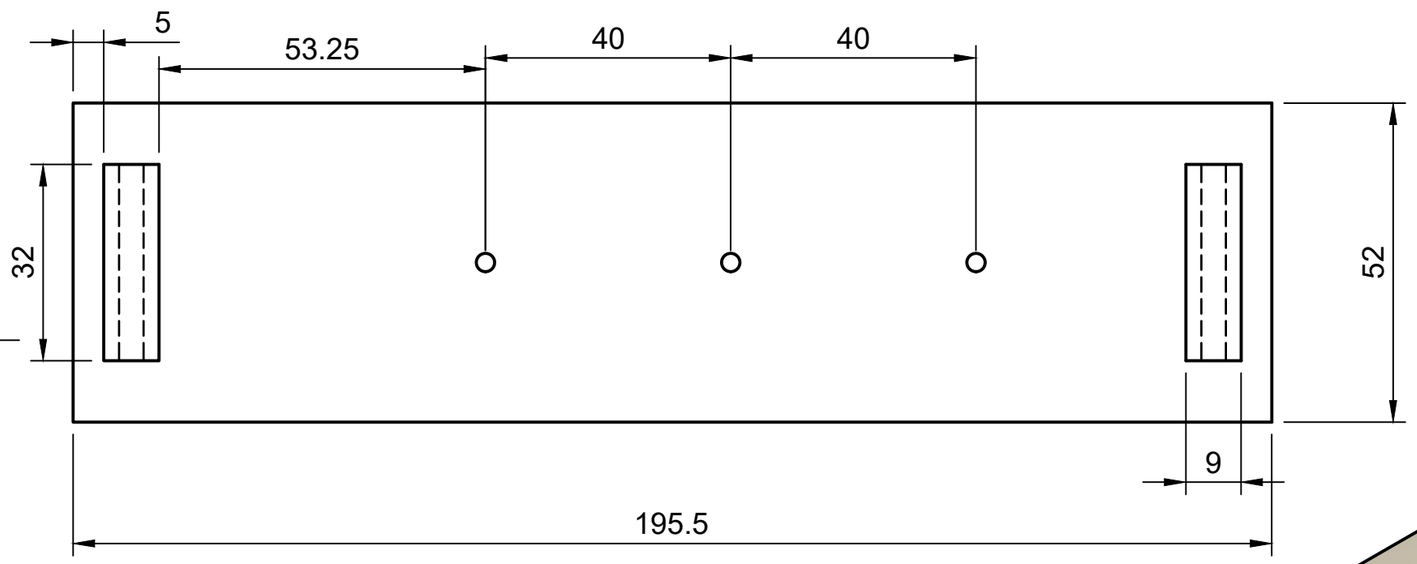

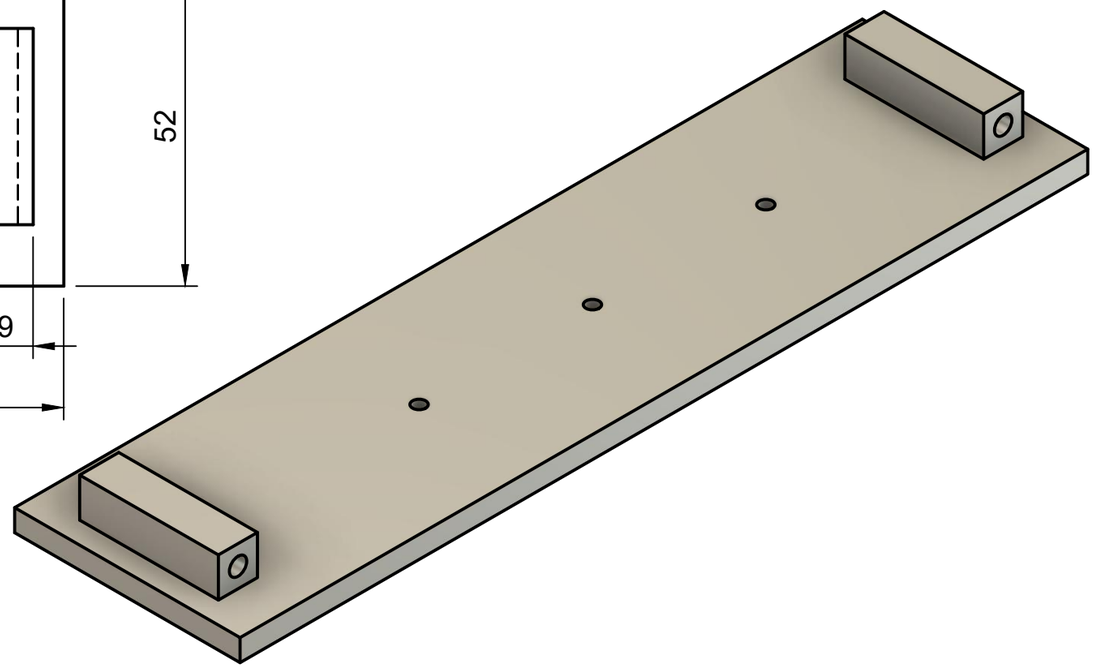

Dept.	Quantity: 1	Created by Tarun Prasad 05-11-2019	All dimensions are in mm
MDP MECH. ENGG.		Document type	Material: Aluminium
		Component Name: Bottom Door	Project Report
			Rev. / Date of issue / Sheet 1/1