SEL-2664S

Stator Ground Protection Relay

Instruction Manual

20250124

SEL SCHWEITZER ENGINEERING LABORATORIES

© 2014-2025 by Schweitzer Engineering Laboratories, Inc.

Content subject to change without notice. Unless otherwise agreed in writing, all SEL product sales are subject to SEL's terms and conditions located here: https://selinc.com/company/termsandconditions/.

Part Number: PM2664S-01

Table of Contents

List of Tables

List of Figures ix

Preface xiii

Overview xiii
Safety Information xiv
General Information xvi

Section 1: Introduction and Specifications

Overview 1.1
Features 1.2
Applications 1.4
Getting Started 1.4
Specifications 1.8

Section 2: Installation

Overview 2.1
Relay Placement 2.1
Relay Connections 2.7
Typical Application Connection Diagrams 2.11
Application Considerations 2.15
Field Serviceability 2.17

Section 3: PC Software

Overview 3.1
QuickSet Setup 3.2
Terminal 3.3
Settings Database Management and Drivers 3.4
Settings 3.6
Event Analysis 3.10
Meter and Control 3.11
QuickSet Help 3.13

Section 4: Protection and Logic Functions

Overview 4.1
Application Data 4.1
Element 64S Setting Guideline 4.2
Group Settings (SET Command) 4.4
Logic Settings (SET L Command) 4.21
Port Settings (SET P Command) 4.30
Report Settings (SET R Command) 4.34
DNP Map Settings (Set DNP n Command, n = 1, 2, or 3) 4.37
Modbus Map Settings (SET M Command) 4.38

Section 5: Metering and Monitoring

Overview 5.1
Metering Function 5.1
Profile Report Monitoring 5.3

Section 6: Settings

Overview 6.1
View/Change Settings Over Communications Port 6.2
Setting Entry Error Message 6.4
SEL-2664S Settings Sheets

Section 7: Communications

Overview 7.1
Communications Interfaces 7.1
Communications Protocols 7.9
SEL ASCII Protocol and Commands 7.13

Section 8: Target and Operation LEDs

LEDs 8.1
TARGET RESET Pushbutton 8.3

Section 9: Analyzing Events

Overview 9.1
Event Reporting 9.2
Sequential Events Recorder (SER) Report 9.9

Section 10: Testing and Troubleshooting

Overview 10.1
Testing Tools 10.1
Commissioning Tests 10.2
Periodic Tests (Routine Maintenance) 10.16
Self-Test 10.17
Troubleshooting 10.20
Technical Support 10.20

Appendix A: Firmware and Manual Versions

Firmware A.1
Instruction Manual A.3

Appendix B: Firmware Upgrade Instructions

Overview B.1
Upgrade Firmware Using QuickSet B.2
Upgrade Firmware Using a Terminal Emulator B.7
Protocol Verification for Relays With IEC 61850 Option B.9
Technical Support B.10

Appendix C: SEL Communications Processors

SEL Communications Protocols C.1
SEL Communications Processor C.3
SEL Communications Processor and Relay Architecture C.5
SEL Communications Processor Example C.7

Appendix D: DNP3 Communications

Overview D.1
Introduction to DNP3 ..... D.1
DNP3 in the SEL-2664S D.6
DNP3 Documentation D.13

Appendix E: Modbus Communications

Overview E.1
Communications Protocol E.1
Reading Parameter Information and Value Using Modbus E.16
Modbus Register Map E.19

Appendix F: IEC 61850 Communications

Features F.1
Introduction to IEC 61850 ..... F.2
IEC 61850 Operation F.3
IEC 61850 Configuration F.11
Logical Nodes F.12
Protocol Implementation Conformance Statement F.16
ACSI Conformance Statements F.21

Appendix G: Mirrored Bits Communications

Overview G.1

Appendix H: Relay Word Bits

Overview H.1
Definitions H.2

Appendix I: Analog Quantities

Glossary

Index

SEL-2664S Command Summary

This page intentionally left blank

List of Tables

Table 1.1 SEL-2664S Serial Port Settings 1.5
Table 2.1 Jumper Functions and Default Positions 2.7
Table 2.2 SEL-2664S Neutral Current Sensor (CTN) Accessories 2.16
Table 2.3 Methods to Create the Desired Effective CTN Ratio 2.16
Table 3.1 SEL Software Solutions 3.1
Table 3.2 QuickSet Applications 3.1
Table 3.3 File/Tools Menus 3.6
Table 3.4 QuickSet Help 3.13
Table 4.1 Guidelines for Setting I_SRC 4.4
Table 4.2 Identifier Settings 4.5
Table 4.3 Injection Frequencies When MODE_SRC = P_LOGIC 4.5
Table 4.4 Configuration Settings 4.6
Table 4.5 k Factors for Equation 4.10 and Equation 4.11 ..... 4.9
Table 4.6 Neutral Overvoltage Element Settings 4.10
Table 4.7 NGR Monitor Function Settings 4.11
Table 4.8 Stator Ground Element Settings 4.14
Table 4.9 Rotor Field Ground Protection Element Settings 4.15
Table 4.10 Trip/Close Logic Settings 4.17
Table 4.11 Control Output Equations and Contact Behavior Settings 4.19
Table 4.12 Time and Date Management Settings 4.19
Table 4.13 Data Reset Setting 4.21
Table 4.14 Enable Settings 4.21
Table 4.15 Latch Bits Equation Settings 4.22
Table 4.16 SELOGIC Control Equation Operators (Listed in Operator Precedence) 4.24
Table 4.17 Other SELOGIC Control Equation Operators/Values 4.27
Table 4.18 SELOGIC Variable Settings 4.28
Table 4.19 Counter Input/Output Description 4.29
Table 4.20 Order of Precedence of the Control Inputs 4.29
Table 4.21 Front-Panel Serial Port Settings 4.31
Table 4.22 Ethernet Port Settings 4.31
Table 4.23 Fiber-Optic Serial Port Settings 4.32
Table 4.24 Rear-Panel Serial Port (EIA-232) Settings 4.33
Table 4.25 Auto-Removal Settings 4.34
Table 4.26 SER Trigger Settings 4.35
Table 4.27 Enable Alias Settings 4.35
Table 4.28 SET R SER Alias Settings 4.35
Table 4.29 Event Report Settings 4.36
Table 4.30 Profile Report Settings 4.36
Table 4.31 DNP Map Settings 4.37
Table 4.32 User Map Register Settings 4.38
Table 5.1 Metered Quantities 5.1
Table 6.1 Methods of Accessing Settings 6.1
Table 6.2 SHOW Command Options 6.2
Table 6.3 SET Command Options 6.2
Table 6.4 SET Command Editing Keystrokes 6.3
Table 6.5 SET Command Format 6.3
Table 7.1 SEL-2664S Communications Port Interfaces 7.1
Table 7.2 EIA-232 Serial Port Pin Functions 7.7
Table 7.3 Protocols Supported on the Various Ports 7.9
Table 7.4 Settings Associated With SNTP 7.12
Table 7.5 Serial Port Automatic Messages 7.14
Table 7.6 Command Response Header Definitions 7.16
Table 7.7 ACCESS Commands 7.17

Table 7.8 COM Command 7.19
Table 7.9 CONTROL Command 7.20
Table 7.10 COUNTER Command 7.20
Table 7.11 DATE Command 7.21
Table 7.12 FCA Command 7.21
Table 7.13 FILE Command 7.22
Table 7.14 GOOSE Command Variants 7.22
Table 7.15 HELP Command 7.24
Table 7.16 HISTORY Command 7.25
Table 7.17 IDENTIFICATION Command 7.25
Table 7.18 IRI Command 7.25
Table 7.19 LDP Commands 7.26
Table 7.20 L_D Command (Load Firmware) 7.26
Table 7.21 LOO Command 7.27
Table 7.22 MET Command 7.28
Table 7.23 PASSWORD Command 7.28
Table 7.24 Factory-Default Passwords for Access Levels 1, 2, and C 7.28
Table 7.25 Valid Password Characters 7.29
Table 7.26 PUL OUTnn Command 7.30
Table 7.27 QUIT Command 7.30
Table 7.28 R_S Command (Restore Factory Defaults) 7.30
Table 7.29 SER Command (Sequential Events Recorder Report) 7.31
Table 7.30 SET Command (Change Settings) 7.31
Table 7.31 SET Command Editing Keystrokes 7.32
Table 7.32 SHOW Command (Show/View Settings) 7.32
Table 7.33 STATUS Command (Relay Self-Test Status) 7.33
Table 7.34 STATUS Command Report Definitions 7.34
Table 7.35 SUMMARY Command 7.35
Table 7.36 TARGET Command (Display Relay Word Bit Status) 7.35
Table 7.37 Front-Panel LEDs and the TAR 0 Command 7.36
Table 7.38 TIME Command (View/Change Time) 7.36
Table 7.39 TRIGGER Command (Trigger Event Report) 7.36
Table 7.40 VEC Command 7.37
Table 8.1 Target LED Conditions 8.2
Table 8.2 Operation LEDs 8.3
Table 9.1 SUM Command 9.4
Table 9.2 Event Types 9.4
Table 9.3 HIS Command 9.7
Table 9.4 CEV Command 9.8
Table 9.5 CEV Command Examples 9.8
Table 9.6 Event Report Quantities 9.9
Table 10.1 Error Message (Command FCA A) 10.7
Table 10.2 Periodic Relay Checks 10.16
Table 10.3 Relay Self-Tests 10.17
Table 10.4 Troubleshooting 10.20
Table A.1 R200 Series Firmware Revision History A.1
Table A.2 R100 Series Firmware Revision History A.2
Table A.3 Instruction Manual Revision History A.3
Table C.1 Supported Serial Command Sets C.1
Table C.2 Compressed ASCII Commands C.2
Table C.3 SEL Communications Processors Protocol Interfaces C.4
Table C.4 SEL Communications Processor Port 1 Settings C.7
Table C.5 SEL Communications Processor Data Collection Automessages C.7
Table C.6 SEL Communications Processor Port 1 Automatic Messaging Settings C.8
Table C.7 SEL Communications Processor Port 1 Region Map C.8
Table C.8 Communications Processor METER Region Map C.9
Table C.9 Communications Processor TARGET Region C.10

Table D.1 DNP3 Implementation Levels D.2
Table D.2 Selected DNP3 Function Codes D.3
Table D.3 DNP3 Access Methods D.4
Table D.4 TCP/UDP Selection Guidelines D.6
Table D.5 DNP3 Access Methods D.6
Table D.6 SEL-2664S Event Buffer Capacity D.9
Table D.7 Port DNP3 Protocol Settings D.11
Table D.8 Serial Port DNP3 Modem Settings D.13
Table D.9 SEL-2664S DNP Object List D.13
Table D.10 DNP3 Reference Data Map D.19
Table D.11 DNP3 Default Data Map D.20
Table D.12 SEL-2664S Object 12 Control Operations D.22
Table D.13 Sample Custom DNP3 AI Map D.25
Table E.1 Modbus Query Fields E.1
Table E.2 SEL-2664S Modbus Function Codes E.2
Table E.3 SEL-2664S Modbus Exception Codes E.3
Table E.4 01h Read Discrete Output Coil Status Command E.4
Table E.5 Responses to 01h Read Discrete Output Coil Query Errors E.4
Table E.6 02h Read Input Status Command E.5
Table E.7 02h SEL-2664S Inputs E.5
Table E.8 Responses to 02h Read Input Query Errors E.6
Table E.9 03h Read Holding Register Command E.7
Table E.10 Responses to 03h Read Holding Register Query Errors E.7
Table E.11 04h Read Input Register Command E.7
Table E.12 Responses to 04h Read Input Register Query Errors E.8
Table E.13 05h Force Single Coil Command E.8
Table E.14 01h, 05h SEL-2664S Output E.8
Table E.15 Responses to 05h Force Single Coil Query Errors E.9
Table E.16 06h Preset Single Register Command E.9
Table E.17 Responses to 06h Preset Single Register Query Errors E.10
Table E.18 08h Loopback Diagnostic Command E.10
Table E.19 Responses to 08h Loopback Diagnostic Query Errors E.10
Table E.20 10h Preset Multiple Registers Command E.11
Table E.21 10h Preset Multiple Registers Query Error Messages E.11
Table E.22 60h Read Parameter Information Command E.12
Table E.23 60h Read Parameter Descriptor Field Definition E.12
Table E.24 60h Read Parameter Conversion Field Definition E.12
Table E.25 Responses to 60h Read Parameter Information Query Errors E.13
Table E.26 61h Read Parameter Text Command E.13
Table E.27 61h Read Parameter Text Query Error Messages E.14
Table E.28 62h Read Enumeration Text Command E.14
Table E.29 61h Read Parameter Enumeration Text Query Error Messages E.15
Table E.30 7Dh Encapsulated Packet With Control Command E.15
Table E.31 7Dh Encapsulated Packet Query Errors E.16
Table E.32 7Eh NOP Command E.16
Table E.34 Modbus Register Map E.19
Table F.1 IEC 61850 Document Set F.2
Table F.2 Example IEC 61850 Descriptor Components F.4
Table F.3 SEL-2664S Logical Devices F.4
Table F.4 Buffered Report Control Block Client Access F.6
Table F.5 Unbuffered Report Control Block Client Access F.7
Table F.6 IEC 61850 Settings F.11
Table F.7 Logical Device: PRO (Protection) F.12
Table F.8 Logical Device: MET (Metering) F.13
Table F.9 Logical Device: CON (Remote Control) F.13
Table F.10 Logical Device: ANN (Annunciation) F.14
Table F.11 Logical Device: CFG (Configuration) F.16
Table F.12 PICS for A-Profile Support F.16

Table F.13 PICS for T-Profile Support F.16
Table F.14 MMS Service Supported Conformance F.17
Table F.15 MMS Parameter CBB F.19
Table F.16 Alternate Access Selection Conformance Statement F.19
Table F.17 VariableAccessSpecification Conformance Statement F.19
Table F.18 VariableSpecification Conformance Statement F.19
Table F.19 Read Conformance Statement F.20
Table F.20 GetVariableAccessAttributes Conformance Statement F.20
Table F.21 DefineNamedVariableList Conformance Statement F.20
Table F.22 GetNamedVariableListAttributes Conformance Statement F.20
Table F.23 DeleteNamedVariableList F.20
Table F.24 GOOSE Conformance F.21
Table F.25 ACSI Basic Conformance Statement F.21
Table F.26 ACSI Models Conformance Statement F.22
Table F.27 ACSI Services Conformance Statement F.23
Table G.1 Number of MIRRORED BITS Messages for Different Baud G.2
Table G.2 Positions of the MIRRORED BITS G.3
Table G.3 MIRRORED BITS Values for a RXDFLT Setting of 10100111 ..... G.3
Table G.4 MIRRORED BITS Communications Message Transmission Period G.5
Table G.5 MIRRORED BITS Protocol Settings G.5
Table H.1 SEL-2664S Relay Word Bits H.1
Table H.2 Relay Word Bit Definitions for the SEL-2664S H.2
Table I.1 Analog Quantities I.1

List of Figures

Figure 1.1 Relay Concept Diagram....1.2
Figure 1.2 Response Header....1.6
Figure 1.3 STA Command Response....1.6
Figure 2.1 SEL-2664S Front and Side Faceplates....2.2
Figure 2.2 SEL-2664S Wall-Mount Dimensions....2.3
Figure 2.3 SEL-2664S Connection Diagram for Wall-Mount Option....2.3
Figure 2.4 Side View of Wall-Mounted SEL-2664S....2.4
Figure 2.5 SEL-2664S Panel-Mount Dimensions....2.4
Figure 2.6 SEL-2664S Connection Diagram for Rack and Panel-Mount Option....2.5
Figure 2.7 Side View of Panel-Mounted SEL-2664S....2.5
Figure 2.8 SEL-2664S Rack-Mount Dimensions....2.6
Figure 2.9 Front View of Rack-Mounted SEL-2664S....2.6
Figure 2.10 Pins for Password and SELBOOT Jumper....2.7
Figure 2.11 OUT01 Relay Output Contact Configuration....2.10
Figure 2.12 Relay Features and Connections....2.10
Figure 2.13 AC Connections With Neutral CBCT on the Secondary Side of the Neutral Grounding Transformer....2.11
Figure 2.14 AC Connections for SEL-2664S and SEL-700G Relays Shown With Neutral CTs on the Secondary Side of the Neutral Grounding Transformer....2.12
Figure 2.15 AC Connections With Neutral CBCT on the Primary Side and Neutral Voltage Transformer....2.12
Figure 2.16 AC Connections With NGR in the Secondary Side of a Wye-Broken Delta Grounding Transformer on the Generator Terminals....2.13
Figure 2.17 AC Connections for Protection Using Redundant Relays Shown With Neutral CBCTs on the Secondary Side of the Neutral Grounding Transformer....2.14
Figure 2.18 Typical DC Connections for an SEL-2664S Application....2.15
Figure 2.19 Basic AC Connections Using the NGR Tap....2.16
Figure 3.1 Serial Port Communications Dialog Box....3.2
Figure 3.2 Serial Port Communications Parameters Dialog Box....3.3
Figure 3.3 Network Communications Parameters Dialog Box....3.3
Figure 3.4 Communications Menu....3.3
Figure 3.5 Device Response to the ID Command....3.4
Figure 3.6 Selection of Drivers....3.7
Figure 3.7 New Setting Screen....3.7
Figure 3.8 Expressions Created With Expression Builder....3.8
Figure 3.9 Composite Screens for Retrieving Events....3.10
Figure 3.10 Saving the Retrieved Event....3.11
Figure 3.11 Device Overview Screen....3.12
Figure 3.12 Control Screen....3.13
Figure 3.13 Remote Operation Selection....3.13
Figure 4.1 Basic AC Connections Using the NGR Tap....4.6
Figure 4.2 59N and 64S Element Operating Characteristics....4.8
Figure 4.3 59N Elements Logic Diagram....4.8
Figure 4.4 NGR Monitor Function....4.11
Figure 4.5 Insulation Resistance Measurement Subsystem Block Diagram....4.12
Figure 4.6 Grounding Circuit Topology With Grounding Resistor on the Secondary Side....4.13
Figure 4.7 64S Elements Logic Diagram....4.13
Figure 4.8 Field Ground Protection (64F) Elements Logic....4.15
Figure 4.9 OPEN Neutral CBCT Monitor Function....4.16
Figure 4.10 Trip Logic....4.18
Figure 4.11 Schematic Diagram of a Traditional Latching Device....4.22

Figure 4.12 Logic Diagram of a Latch Switch....4.22
Figure 4.13 SELOGIC Control Equation Variable/Timers SV01/SV01T—SV08T....4.23
Figure 4.14 Result of Falling-Edge Operator on a Deasserting Input....4.26
Figure 4.15 Example Use of SELOGIC Variables/Timers....4.28
Figure 4.16 Counter 01....4.28
Figure 4.17 Example of the Effects of the Input Precedence....4.30
Figure 5.1 MET Command Response....5.2
Figure 5.2 MET MV Command Response....5.2
Figure 5.3 LDP Command Response....5.3
Figure 5.4 CPRO Command Response....5.4
Figure 5.5 SYNCHROWAVE Display of CPRO Report....5.4
Figure 7.1 Simple Ethernet Network Configuration....7.3
Figure 7.2 Ethernet Network Configuration with Dual Redundant Connections....7.3
Figure 7.3 Ethernet Network Configuration With Ring Structure....7.4
Figure 7.4 IRIG-B Input Via EIA-232 Port 3 (SEL Communications Processor as Source)....7.5
Figure 7.5 IRIG-B Input Via EIA-232 Port 3 (SEL-2401/2404/2407 Time Source)....7.6
Figure 7.6 IRIG-B Input Via Fiber-Optic EIA-232 Port 2 (SEL-2030/2032 Time Source)....7.6
Figure 7.7 IRIG-B Input Via Fiber-Optic EIA-232 Port 2 (SEL-2401/2404/2407 Time Source)....7.6
Figure 7.8 EIA-232 DB-9 Connector Pin Numbers....7.7
Figure 7.9 SEL-C234A Cable—SEL-2664S to DTE Device....7.8
Figure 7.10 SEL-C227A Cable—SEL-2664S to DTE Device....7.8
Figure 7.11 SEL-C222 Cable—SEL-2664S to Modem....7.8
Figure 7.12 SEL-C272A Cable—SEL-2664S to SEL Communications Processor (Without IRIG-B Signal)....7.8
Figure 7.13 SEL-C273A Cable—SEL-2664S to SEL Communications Processor (With IRIG-B Signal)....7.9
Figure 7.14 Ethernet Port (PORT 1) Status Report....7.21
Figure 7.15 GOOSE Command Response....7.24
Figure 7.16 ID Command Response....7.25
Figure 7.17 PING Command Response....7.29
Figure 7.18 SHOW Command Example....7.33
Figure 7.19 Typical Relay Output for STATUS S Command....7.35
Figure 8.1 Target and Operation LEDs....8.1
Figure 8.2 Front and Side Panels....8.2
Figure 8.3 Target Reset Pushbutton....8.3
Figure 9.1 Data Capture/Event Report Times....9.2
Figure 9.2 Example Event Summary....9.4
Figure 9.3 Compressed Event Report Summary and Trigger Row....9.5
Figure 9.4 Sample Event History....9.7
Figure 9.5 Example of an Event Report Opened in SYNCHROWAVE Event Software....9.9
Figure 9.6 Example Sequential Events Recorder (SER) Event Report....9.10
Figure 10.1 SEL-4664 Calibration Module....10.2
Figure 10.2 Typical Test Leads and Alligator Clips....10.2
Figure 10.3 SEL-4664 Calibration Module....10.3
Figure 10.4 Grounding Circuit Topology With Grounding Resistor on the Secondary Side....10.3
Figure 10.5 SEL-4664 Connections (NGR and CTN on Secondary)....10.4
Figure 10.6 SEL-4664 Connections (NGR on Secondary and CTN on Primary)....10.5
Figure 10.7 SEL-4664 Test Connections (NGR on Primary)....10.5
Figure 10.8 Preferred Methods for 64S Output Lead Calibration (NGR Located on Secondary)....10.9
Figure 10.9 64S Output Lead Calibration (NGR Located on Primary)....10.9
Figure 10.10 Primary Short Circuit Test (NGR Located on Secondary)....10.10
Figure 10.11 Primary Short Circuit Test (NGR Located on Primary)....10.10
Figure 10.12 Accuracy Measurement Test (NGR Located on Secondary)....10.11
Figure 10.13 Accuracy Measurement Test (NGR Located on Primary)....10.11
Figure 10.14 FCA S Command Response....10.14
Figure 10.15 FCA S Command Response Explanation....10.14

Figure B.1 Firmware File Transfer Process B.8
Figure C.1 SEL Communications Processor Star Integration Network C.3
Figure C.2 Multitiered SEL Communications Processor Architecture C.4
Figure C.3 Enhancing Multidrop Networks With SEL Communications Processors C.6
Figure C.4 Example of SEL Relay and SEL Communications Processor Configuration C.7
Figure D.1 Application Confirmation Timing With URETRY n = 2 ..... D.7
Figure D.2 Message Transmission Timing D.8
Figure D.3 Sample Response to SHO DNP Command D.23
Figure D.4 Port MAP Command D.24
Figure D.5 Sample Custom DNP3 AI Map Settings D.25
Figure D.6 Analog Input Map Entry in QuickSet Software D.26
Figure D.7 AI Point Label, Scaling and Dead Band in QuickSet Software D.26
Figure D.8 Sample Custom DNP3 BO Map Settings D.27
Figure D.9 Binary Output Map Entry in QuickSet Software D.27
Figure F.1 SEL-2664S Predefined Reports F.6
Figure F.2 SEL-2664S Datasets F.8
Figure F.3 GOOSE Quality F.9

This page intentionally left blank

Preface

Overview

The SEL-2664S Stator Ground Protection Relay Instruction Manual describes common aspects of generator relay application and use. It includes the necessary information to install, set, test, and operate the relay.

An overview of each manual section and topics follows:

Preface. Describes the manual organization and conventions used to present information.

Section 1: Introduction and Specifications. Describes the basic features and functions of the SEL-2664S; lists the relay specifications.

Section 2: Installation. Describes how to mount and wire the SEL-2664S; illustrates wiring connections for various applications.

Section 3: PC Software. Describes the features, installation methods, and types of help available with the ACSELERATOR QuickSet® SEL-5030 Software.

Section 4: Protection and Logic Functions. Describes the operating characteristic of each protection element, using logic diagrams and text, and explains how to calculate element settings; describes contact output logic, automation, and report settings.

Section 5: Metering and Monitoring. Describes the operation of metering function; describes the monitoring function.

Section 6: Settings. Describes how to view, enter, and record settings for protection, control, communications, logic, and monitoring.

Section 7: Communications. Describes how to connect the SEL-2664S to a PC for communication; shows serial port pinouts; lists and defines serial port commands. Describes the communications port interfaces and protocols supported by the relay for serial and Ethernet ports.

Section 8: Target and Operation LEDs. Explains the features and use of the front panel.

Section 9: Analyzing Events. Describes front-panel LED operation, event summary data, standard event reports, and Sequential Events Recorder (SER) report.

Section 10: Testing and Troubleshooting. Describes protection element test procedures, relay self-test, and relay troubleshooting. It also describes the field calibration procedure that is required before putting the product in service.

Appendix A: Firmware and Manual Versions. Lists the current relay firmware version and details differences between the current and previous versions. Provides a record of changes made to the manual since the initial release.

Appendix B: Firmware Upgrade Instructions. Describes the procedure to update the firmware stored in flash memory.

Appendix C: SEL Communications Processors. Provides examples of how to use the SEL-2664S with SEL Communications Processors for total substation automation solutions.

Appendix D: DNP3 Communications. Describes the DNP3 protocol support provided by the SEL-2664S.

Appendix E: Modbus Communications. Describes the Modbus® protocol support provided by the SEL-2664S.

Appendix F: IEC 61850 Communications. Describes IEC 61850 implementation in the SEL-2664S.

Appendix G: Mirrored Bits Communications. Describes how SEL protective relays and other devices can directly exchange information quietly, securely, and with minimum cost.

Appendix H: Relay Word Bits. Lists and describes the Relay Word bits (outputs of protection and control elements).

Appendix I: Analog Quantities. Lists and describes the Analog Quantities (outputs of analog elements).

SEL-2664S Command Summary. Briefly describes the serial port commands that are fully described in *Section 7: Communications*.

Safety Information

Dangers, Warnings, and Cautions

This manual uses three kinds of hazard statements, formatted as follows:

⚠DANGER
Indicates an imminently hazardous situation that, if not avoided, **will** result in death or serious injury.

⚠WARNING
Indicates a potentially hazardous situation that, if not avoided, **could** result in death or serious injury.

⚠CAUTION
Indicates a potentially hazardous situation that, if not avoided, **may** result in minor or moderate injury or equipment damage.

Safety Symbols

The following symbols from EN 61010-1 are often marked on SEL products.

	⚠CAUTION Refer to accompanying documents.	⚠ATTENTION Se reporter à la documentation.
	Earth (ground)	Terre
	Protective earth (ground)	Terre de protection
	Direct current	Courant continu
	Alternating current	Courant alternatif
	Both direct and alternating current	Courant continu et alternatif
	Instruction manual	Manuel d'instructions

Safety Marks

The following statements apply to this device.

General Safety Marks

⚠CAUTION There is danger of explosion if the battery is incorrectly replaced. Replace only with Rayovac no. BR2335 or equivalent recommended by manufacturer. See Owner's Manual for safety instructions. The battery used in this device may present a fire or chemical burn hazard if mistreated. Do not recharge, disassemble, heat above 100°C, or incinerate. Dispose of used batteries according to the manufacturer's instructions. Keep battery out of reach of children.	⚠ATTENTION Une pile remplacée incorrectement pose des risques d'explosion. Remplacez seulement avec un Rayovac no BR2335 ou un produit équivalent recommandé par le fabricant. Voir le guide d'utilisateur pour les instructions de sécurité. La pile utilisée dans cet appareil peut présenter un risque d'incendie ou de brûlure chimique si vous en faites mauvais usage. Ne pas recharger, démonter, chauffer à plus de 100 °C ou incinérer. Éliminez les vieilles piles suivant les instructions du fabricant. Gardez la pile hors de la portée des enfants.
⚠CAUTION To ensure proper safety and operation, the equipment ratings, installation instructions, and operating instructions must be checked before commissioning or maintenance of the equipment. The integrity of any protective conductor connection must be checked before carrying out any other actions. It is the responsibility of the user to ensure that the equipment is installed, operated, and used for its intended function in the manner specified in this manual. If misused, any safety protection provided by the equipment may be impaired.	⚠ATTENTION Pour assurer la sécurité et le bon fonctionnement, il faut vérifier les classements d'équipement ainsi que les instructions d'installation et d'opération avant la mise en service ou l'entretien de l'équipement. Il faut vérifier l'intégrité de toute connexion de conducteur de protection avant de réaliser d'autres actions. L'utilisateur est responsable d'assurer l'installation, l'opération et l'utilisation de l'équipement pour la fonction prévue et de la manière indiquée dans ce manuel. Une mauvaise utilisation pourrait diminuer toute protection de sécurité fournie par l'équipement.
For use in Pollution Degree 2 environment.	Pour utilisation dans un environnement de Degré de Pollution 2.
Ambient air temperature shall not exceed 40°C (104°F). See product or manual for ratings.	La température ambiant de l'air ne doit pas dépasser 40 °C (104 °F). Voir le produit ou le manuel pour les valeurs nominales.
Tightening Torque Terminal Block: 0.79 Nm (7in-lb)	Couple de serrage Borniers : 0,79 Nm (7 livres-pouce)

Other Safety Marks (Sheet 1 of 2)

⚠DANGER Contact with instrument terminals can cause electrical shock that can result in injury or death.	⚠DANGER Tout contact avec les bornes de l'appareil peut causer un choc électrique pouvant entraîner des blessures ou la mort.
⚠DANGER Disconnect or de-energize all external connections before opening this device. Contact with hazardous voltages and currents inside this device can cause electrical shock resulting in injury or death.	⚠DANGER Mettre hors tension ou débrancher tous les raccordements externes avant d'ouvrir cet appareil. Tout contact avec des tensions ou courants internes à l'appareil peut causer un choc électrique pouvant entraîner des blessures ou la mort.

Other Safety Marks (Sheet 2 of 2)

⚠WARNING This device is shipped with default passwords. Default passwords should be changed to private passwords at installation. Failure to change each default password to a private password may allow unauthorized access. SEL shall not be responsible for any damage resulting from unauthorized access.	⚠AVERTISSEMENT Cet appareil est expédié avec des mots de passe par défaut. A l'installation, les mots de passe par défaut devront être changés pour des mots de passe confidentiels. Dans le cas contraire, un accès non-autorisé á l'équipement peut être possible. SEL décline toute responsabilité pour tout dommage résultant de cet accès non-autorisé.
⚠WARNING Use of this equipment in a manner other than specified in this manual can impair operator safety safeguards provided by this equipment.	⚠AVERTISSEMENT L'utilisation de cet appareil suivant des procédures différentes de celles indiquées dans ce manuel peut désarmer les dispositifs de protection d'opérateur normalement actifs sur cet équipement.
⚠CAUTION Looking into optical connections, fiber ends, or bulkhead connections can result in hazardous radiation exposure.	⚠ATTENTION Regarder vers les connecteurs optiques, les extrémités des fibres oules connecteurs de cloison peut entraîner une exposition à des rayonnements dangereux.
⚠CAUTION Equipment components are sensitive to electrostatic discharge (ESD). Undetectable permanent damage can result if you do not use proper ESD procedures. Ground yourself, your work surface, and this equipment before removing any cover from this equipment. If your facility is not equipped to work with these components, contact SEL about returning this device and related SEL equipment for service.	⚠ATTENTION Les composants de cet équipement sont sensibles aux décharges électrostatiques (DES). Des dommages permanents non-décelables peuvent résulter de l'absence de précautions contre les DES. Raccordez-vous correctement à la terre, ainsi que la surface de travail et l'appareil avant d'en retirer un panneau. Si vous n'êtes pas équipés pour travailler avec ce type de composants, contacter SEL afin de retourner l'appareil pour un service en usine.
⚠WARNING Have only qualified personnel service this equipment. If you are not qualified to service this equipment, you can injure yourself or others, or cause equipment damage.	⚠AVERTISSEMENT Seules des personnes qualifiées peuvent travailler sur cet appareil. Si vous n'êtes pas qualifiés pour ce travail, vous pourriez vous blesser, blesser d'autres personnes ou endommager l'équipement.
⚠WARNING Do not perform any procedures or adjustments that this instruction manual does not describe.	⚠AVERTISSEMENT Ne pas appliquer une procédure ou un ajustement qui n'est pas décrit explicitement dans ce manuel d'instruction.

General Information

There are two ways to communicate with the SEL-2664S:

- ➤ Using a command line interface on a PC terminal emulation window.
- ➤ Using QuickSet.

Typographic Conventions

The instructions in this manual indicate these options with specific font and formatting attributes. The following table lists these conventions.

Example	Description
STATUS	Commands typed at a command line interface on a PC.
<Enter>	Single keystroke on a PC keyboard.
<Ctrl+D>	Multiple/combination keystroke on a PC keyboard.
Start > Settings	PC dialog boxes and menu selections. The > character indicates submenus.
ENABLE	Relay front- or side-panel LED labels.

Examples

This instruction manual uses several example illustrations and instructions to explain how to effectively operate the SEL-2664S. These examples are for demonstration purposes only; the firmware identification information or settings values included in these examples will not necessarily match those in the current version of your SEL-2664S.

Product Labels

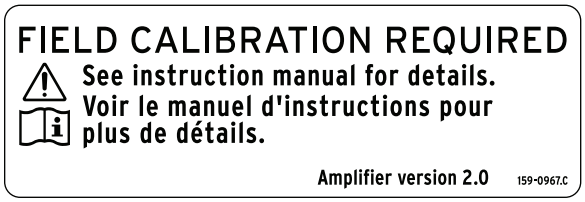

The field calibration label prompts the customer to perform field calibration for the **SEL-2664S** after the unit is installed in the field and is ready to be used for protection. Refer to *Field Calibration Process* in *Section 10: Testing and Troubleshooting* for the field calibration procedure for the SEL-2664S. The product label is also used to identify the amplifier version starting with Version 2.0. Assume Version 1.0 if not explicitly marked.

LED Emitter

The following table shows LED information specific to the **SEL-2664S**. See *Figure 2.8* for the location of the ports using these LEDs on the SEL-2664S.

⚠CAUTION
Looking into optical connections, fiber ends, or bulkhead connections can result in hazardous radiation exposure.

SEL-2664S LED Information

Item	Fiber-Optic Ethernet Port 1 (1A, 1B)	Port 2
Mode	Multimode	Multimode
Wavelength	1300 nm	820 nm
Source	LED	LED
Connector type	LC	ST
Typical output power	–15.7 dBm	–16 dBm

The following figure displays the LED location specific to the SEL-2664S (see *Figure 2.8* for the complete rear-panel drawing).

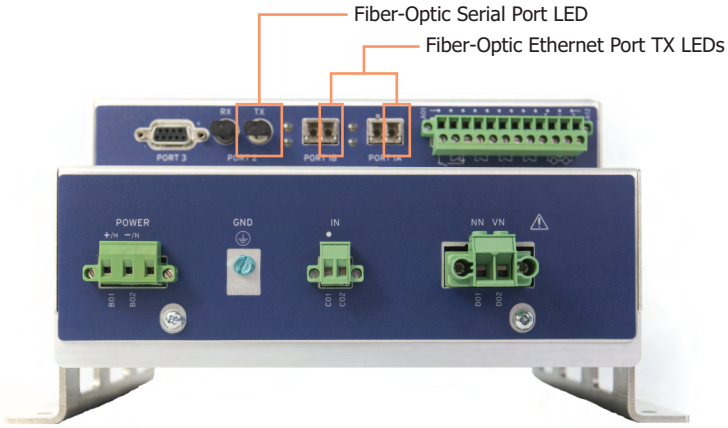

LED Location Specific to the SEL-2664S

LED Safety Warnings and Precautions

➤ Do not look into the end of an optical cable connected to an optical output.
➤ Do not look into the fiber ports/connectors.
➤ Do not perform any procedures or adjustments that are not described in this manual.
➤ Incorporated components, such as transceivers and LED emitters, are not user serviceable. Units must be returned to SEL for repair or replacement.

Environmental Conditions and Voltage Information

The following table lists important environmental and voltage information.

Example	Description
Indoor/outdoor use	Indoor
Altitude (consult with factory for derating specifications for higher altitude applications	To 2000 m
Temperature	
IEC Performance Rating (per IEC/EN 60068-2-1 and IEC/EN 60068-2-2)	PC dialog boxes and menu selections. The > character indicates submenus.
Relative humidity	5% to 95%
Main supply voltage fluctuations	±10% of Nominal voltage
Overvoltage	Category II
Pollution	Degree 2
Atmospheric pressure	80 to 110 kPa

Instructions for Cleaning and Decontamination

Use a mild soap or detergent solution and a damp cloth to carefully clean the SEL-2664S chassis when necessary. Avoid using abrasive materials, polishing compounds, and harsh chemical solvents (such as xylene or acetone) on any surface of the relay.

Technical Support

We appreciate your interest in SEL products and services. If you have questions or comments, contact us at:

Schweitzer Engineering Laboratories, Inc.
2350 NE Hopkins Court
Pullman, WA 99163-5603 U.S.A.
Tel: +1.509.338.3838
Fax: +1.509.332.7990
Internet: selinc.com/support
Email: info@selinc.com

This page intentionally left blank

SECTION 1

Introduction and Specifications

Overview

The SEL-2664S Stator Ground Protection Relay is designed to protect high resistance grounded three-phase unit-connected generators. The relay protects the generator against stator insulation degradation, ground faults, neutral overvoltage, and grounding resistor faults. The ground faults in the range of 0–10 kOhm are accurately measured (see *Metering* on page 1.12), with values reported above 10 kOhm used for indication only and not for trending purposes. Other methods should be used for more elaborate measurement of the insulation health (e.g., high-potential test, partial discharge test, capacitance and dissipation factor test, and insulation resistance and polarization index test).

When used with an SEL-2664 Field Ground Module, the SEL-2664S Relay protects against rotor field insulation faults-to-ground. The SEL-2664S is intended for high-resistance grounded generator applications and cannot be used with low-impedance grounded, solidly grounded, and ungrounded configurations. See *Application Considerations* on page 2.15 for additional details.

This manual contains the information needed to install, set, test, operate, and maintain an SEL-2664S.

Relay Functional Overview

Figure 1.1 shows the functional overview of SEL-2664S, Amplifier Versions 1.0 and 2.0 (see *Hardware Features* for more detail). The SEL-2664S consists of a power amplifier that amplifies the multisine signal generated by the processor. The amplified signal is injected through the neutral voltage (VN) terminal into the neutral grounding resistor (NGR). The injection current (I_SRC) and the neutral voltage (VN) are measured as shown in *Figure 1.1*. The core balance current transformer (CBCT) output connects to terminals C01 and C02 to measure neutral current (IN). Refer to *Figure 2.13* for a typical application example. The CBCT is a low-energy sensor with 1 mA output that does not require typical wiring practices (e.g., large gauge wire, shorting test blocks) associated with conventional current transformers.

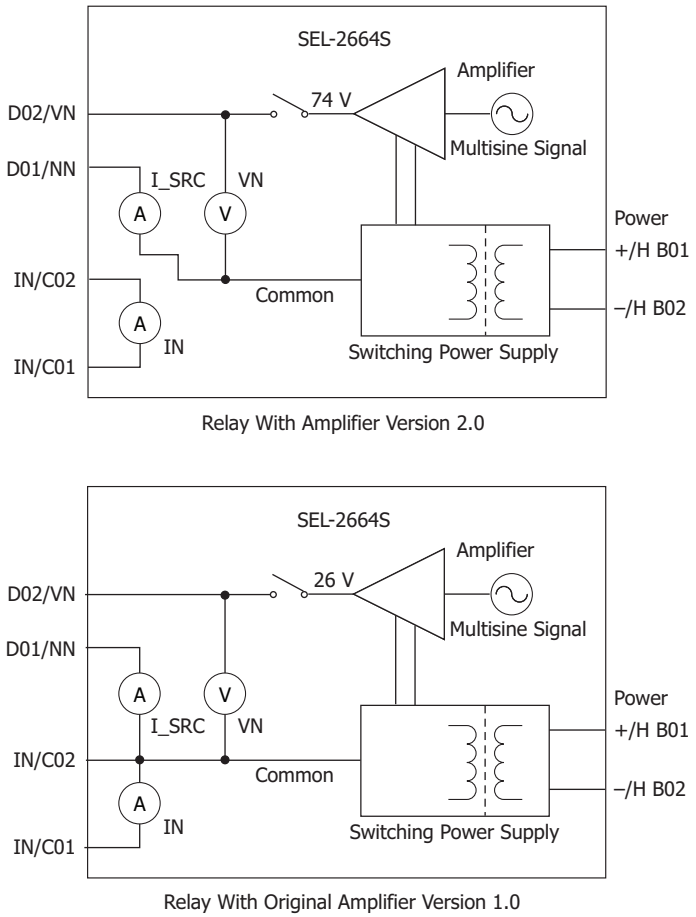

Figure 1.1 Relay Concept Diagram

The switch shown at the output of the amplifier closes when the stator ground protection (64S element) is enabled. The injection current (I_SRC), neutral current (IN), and neutral voltage (VN) measurements are used to calculate the stator ground resistance as discussed in *Section 4: Protection and Logic Functions*, *Stator Ground Protection (64S)*. The following text explains the various features supported by the SEL-2664S.

Features

Protection Features

- Stator Ground Protection (64S)
- Fundamental and RMS Neutral Overvoltage (59)
- Neutral Grounding Resistor (NGR) Monitor
- Rotor Field Ground Protection (64F) (Optional—Requires SEL-2664)

Monitoring Features

- Event summaries that contain relay ID, date and time, trip cause, and current/voltage magnitudes
- Event reports including raw analog data
- Sequential Events Record (SER)
- Profile report monitoring
- Instantaneous meter report
- Math Variable meter report
- **FCA S** command report (display complex values of select analog quantities)

Communications and Control Features

- EIA-232 front-panel serial port
- Dual fiber-optic Ethernet ports, fiber-optic rear-panel EIA-232 serial port, and EIA-232 rear-panel serial port
- IRIG-B time-code input via **PORT 2** or **PORT 3**
- Modbus® RTU slave, Modbus TCP/IP, DNP3 serial, DNP3 LAN/WAN, Ethernet FTP, Telnet, SNTP, MIRRORED BITS®, IEC 61850, and File Transfer Protocols
- SEL ASCII, Compressed ASCII, Fast Meter, Fast Operate, Fast SER, and Fast Message Protocols
- Programmable Boolean and math operators, logic functions, and analog compare

Hardware Features

- Eight target LEDs
- Operator control interface via a TARGET RESET pushbutton
- Front EIA-232 serial port
- Two digital inputs internally wetted to 24 Vdc and four digital outputs, one Form C and three Form A
- Power supply, 125/250 Vdc with Version 2.0 supporting 120/240 Vac
- Processor and communications card, EIA-232 serial port, Multimode (ST®) fiber-optic EIA-232 serial port, dual fiber-optic Ethernet ports
- IRIG-B time-code input on PORT 2 or PORT 3
- Neutral current, IN and neutral voltage, VN analog inputs
- Enhanced Amplifier (Version 2.0):
  - Injection source (amplifier) with higher shutdown voltage (see *Specifications* for details).
  - CTN current input clipping level improved (see *Specifications* for details).
  - CTN current input isolated to allow traditional grounding practices, external to the relay (see *Figure 1.1* for details).
  - See *IDENTIFICATION Command* report to identify amplifier version in the relay.

Ordering Information

See the latest SEL-2664S Model Option Table, available at selinc.com for complete ordering information.

Accessories

NOTE: Refer to *Application Considerations* in *Section 2: Installation* for details on CBCTs and shunt resistors. Refer to *Field Calibration Process* in *Section 10: Testing and Troubleshooting* for details on the SEL-4664 Calibration Module and resistor.

Contact your Technical Service Center or the SEL factory for additional detail and ordering information for the following accessories.

- SEL-2664
- SEL-2664S Mounting Conversion Kit (P/N 915900310)
- Fanox CT-1/80-41070 500:1 Turns Ratio, 50 A Max Current, 3.14" Diameter Window CBCT (P/N 915900352)
- Allen-Bradley 193-CBCT3, 1000:1 Turns Ratio, 180 A Max Current, 2.50" Diameter Window CBCT (P/N 915900286)
- Calibration and Shunt Resistor Kit (P/N 915900517)
- SEL-4664 Calibration Module
- Refer to the SEL-2664S Model Option Table for information on accessories, such as cables.

Applications

Section 2: Installation includes ac and dc connection diagrams for various applications. The following is a list of possible application scenarios:

- Neutral Grounding Resistor (NGR) on the secondary side of the Neutral Grounding Transformer (NGT)
- NGR on the primary side of the NGT
- NGR on the secondary side of a wye/broken-delta grounding transformer on the generator terminals
- 100 percent stator ground protection and field ground protection using the SEL-2664S and the SEL-2664
- Protection with redundant relays
- Variable frequency start (e.g., gas turbine generators)

Getting Started

Understanding basic relay operation principles and methods will help you use the SEL-2664S effectively. This section presents the fundamental knowledge you need to operate the SEL-2664S, organized by task. Performing these tasks helps you become familiar with the relay. Tasks include the following:

- Powering the relay
- Establishing communication
- Checking relay status
- Setting the date and time

Powering the Relay

Power the SEL-2664S with 125/250 Vdc or 120/240 Vac (Amplifier Version 2.0).

- ➤ Observe proper polarity, as indicated by the **+/H** (terminal **B01**) and the **–/N** (terminal **B02**) on the power connections.
- ➤ Connect the ground lead; see *Grounding (Earthing) Connections* on page 2.8.
- ➤ Once connected to power, the relay does an internal self-check and the **ENABLED** LED illuminates.

Establishing Communication

The SEL-2664S has two EIA-232 serial communications ports. The following steps require PC terminal emulation software and an SEL Cable C234A (or equivalent) to connect the SEL-2664S to the PC. See *Section 7: Communications* for further information on serial communications connections and the required cable pinout.

Step 1. Connect the PC to the SEL-2664S with the serial communications cable.

Step 2. Apply power to both the PC and the relay.

Step 3. Start the PC terminal emulation program.

Step 4. Set the PC terminal emulation program to the communications port settings listed in the Default Value column of *Table 1.1*.

Terminal emulation software should support Xmodem/CRC or 1k Xmodem/CRC protocol.

Step 5. Press the **<Enter>** key on the PC keyboard to check the communications link.

You will see the = prompt at the left side of the computer screen (column 1).

If you do not see the = prompt, check the cable connections, and confirm that the settings in the terminal emulation program are the same as the default values in *Table 1.1*.

Table 1.1 SEL-2664S Serial Port Settings

Description	Setting Label	Default Value
SPEED	SPEED	9600
DATA BITS	BITS	8
PARITY	PARITY	N
STOP BITS	STOP	1
PORT TIMEOUT	T_OUT	5
HWDR HANDSHAKING	RTSCTS	N

Step 6. Type **QUIT <Enter>** to view the relay report header.

You will see a computer screen display similar to *Figure 1.2*. If you see jumbled characters, change the terminal emulation type in the PC terminal emulation program.

```
=>QUIT <Enter>
SEL-2664S              Date: 12/17/2013  Time: 10:22:14.348
STATOR GND RELAY       Time Source: Internal
```

Figure 1.2 Response Header

Step 7. Type **ACC <Enter>** and the appropriate password (see *Table 7.7* for factory-default passwords) to go to Access Level 1.

Step 8. Type **QUIT <Enter>** to view the relay report header.

Checking Relay Status

Use the **STA** serial port command to view the SEL-2664S operational status. Analog channel dc offset and monitored component status are listed in the status report depicted in *Figure 1.3*.

```
=>>STA <Enter>

SEL-2664S                                Date: 02/14/2022   Time: 13:28:14.535
RELAY 2 NEW                              Time Source: External

Serial Num = 1210600228     FID = SEL-2664S-X283-V0-Z003002-D20220328
CID = 4243                  PART NUM = 2664S01XX83

Self Tests (W=Warn)
  FPGA  GPSB  RAM   ROM   CR_RAM  NON_VOL  CLOCK  CID_FILE  +0.9V  +1.2V  +1.5V
  OK    OK    OK    OK    OK      OK       OK     OK        0.91   1.20   1.50

  +1.8V  +2.5V  +3.3V  +5.0V  -5.0V   BATT   AMPLIFIER
  1.82   2.52   3.33   5.01   -4.97   3.10   N/A

Offsets (mV)                                     Voltage (V)       Temp (C)
  IINJ     IN       INX8     VINJX1    VINJX2   VBUS    ADCCHK    VTEMP
  -7.00    0.00     0.00     -8.00    -14.00    110.5    2.50     34.90

  Relay Enabled

=>>
```

Figure 1.3 STA Command Response

Table 7.34 provides the definition of each status report designator and *Table 10.3* shows all the self-tests performed by the relay. The beginning of the status report printout (see *Figure 1.3*) contains the relay serial number, firmware identification string (FID), and checksum string (CID). These strings uniquely identify the relay and the version of the operating firmware.

Setting the Date and Time

DAT (Date Command)

Viewing the Date

Type **DAT <Enter>** at the prompt to view the date stored in the SEL-2664S. If the date stored in the relay is December 30, 2013, and the DATE_F setting is MDY, the relay will reply:

```
12/30/2013
```

If the DATE_F setting is YMD, the relay will reply:

```
2013/12/30
```

If the DATE_F setting is DMY, the relay will reply:

```
30/12/2013
```

Changing the Date

Type **DAT** followed by the correct date at the prompt to change the date stored in the relay. For example, to change the date to May 2, 2013 (DATE_F = MDY), enter the following at the action prompt:

```
DAT 5/2/13
```

You can separate the month, day, and year parameters with spaces, commas, slashes, colons, and semicolons.

TIM (Time Command)

Viewing the Time

Enter **TIM** at the prompt to view the time stored in the SEL-2664S. The relay will reply with the stored time. For example

```
13:52:44
```

This time is 1:52 p.m. (and 44 seconds).

Changing the Time

Enter **TIM** followed by the correct time at the action prompt to change the time stored in the relay. For example, to change the time to 6:32 a.m., enter the following at the prompt:

```
TIM 6:32:00
```

You can separate the hours, minutes, and seconds parameters with spaces, commas, slashes, colons, and semicolons.

Specifications

Compliance

Designed and manufactured under an ISO 9001 certified quality management system

47 CFR 15B, Class A

This equipment has been tested and found to comply with the limits for a Class A digital device, pursuant to part 15 of the FCC Rules. These limits are designed to provide reasonable protection against harmful interference when the equipment is operated in a commercial environment. This equipment generates, uses, and can radiate radio frequency energy and, if not installed and used in accordance with the instruction manual, may cause harmful interference to radio communications. Operation of this equipment in a residential area is likely to cause harmful interference in which case the user will be required to correct the interference at his own expense.

UL Listed to U.S. and Canadian safety standards (File E212775; NRGU; NRGU7)

CE Mark

RCM Mark

General

Note: The CBCT Current (IN), Neutral Voltage (VN), and Injection Source (I_SRC) specifications are dependent on the amplifier version (1.0 or 2.0). See *Hardware Features* on page 1.3 for details.

CBCT Current Input (IN)

Nominal Input Current:	5 mA ac rms
Continuous Thermal Rating:	1 A
Measurement Clipping Level:	100 mA peak (Amplifier Version 2.0 when CTN_LOC = SEC) 12 mA peak (Amplifier Version 2.0 when CTN_LOC = PRIM) >22 mA peak (Amplifier Version 1.0 [original])
One-Second Thermal Rating:	10 A
Burden Rating:	4 Ω (Amplifier Version 2.0) 10 Ω (Amplifier Version 1.0 [original])
Rated Insulation Voltage (U_i):	300 Vac (IN inputs are galvanically connected to VN terminals in Amplifier Version 1.0; inputs are isolated in Amplifier Version 2.0)

Neutral Voltage Input (VN)

Rated Operating Voltage (U_e):	2.5–240 Vac
Rated Insulation Voltage (U_i):	300 Vac
Maximum Continuous Overvoltage Rating:	275 Vac

Injection Source (I_SRC)

Source Rating:	50 VA continuous
Nominal Injected Current Amplitude:	0.5–5.0 A rms
Continuous Thermal Rating:	5 A rms 0.5–2.5 A rms at 85°C 2.5–5.0 A rms at 70°C
Amplifier Clipping Level:	>±74 V peak (Amplifier Version 2.0) >±20 V peak (Amplifier Version 1.0 [original])

Four Frequency Multisine Injection

For 60 Hz nominal:	18, 24, 36, and 48 Hz
For 50 Hz nominal:	15, 20, 30, and 40 Hz
Maximum Open Terminal Voltage:	80 V peak (Amplifier Version 2.0) 26 V peak (Amplifier Version 1.0 [original])
Protection:	Self-protecting

Power Supply

Relay Start-Up Time:	Approximately 5–10 seconds (after power is applied until the **ENABLED** LED turns on)

High-Voltage Supply

Rated Supply Voltage:	110–250 Vdc 110–240 Vac, 50/60 Hz (Version 2.0)
Input Voltage Range:	85–300 Vdc 85–264 Vac
Power Consumption:	<120 W (dc) <120 VA (ac)
Interruptions:	10 ms at 125 Vdc 10 ms at 120 Vac

Fuse Ratings

HV Power Supply Fuse

Rating:	1.6 A
Maximum Rated Voltage:	300 Vdc, 277 Vac
Breaking Capacity:	200 A at 250 Vac
Type:	Time-lag T

Output Contacts

General

The relay supports Form A and Form C outputs.

Dielectric Test Voltages:	2500 Vac
Impulse Withstand Voltage (U_{IMP}):	5000 V
Mechanical Durability:	100,000 no-load operations

Standard Contacts

Pickup/Dropout Time:	≤8 ms (coil energization to contact closure)
Rated Insulation Voltage:	300 Vdc
Make:	30 A at 250 Vdc per IEEE C37.90
Continuous Carry:	6 A at 70°C 4 A at 85°C
Thermal:	50 A for 1 s
Contact Protection:	360 Vdc, 80 J MOV protection across open contacts

Breaking Capacity (10,000 Operations) per IEC 60255-0-20:1974:

24 Vdc	0.75 A	L/R = 40 ms
48 Vdc	0.50 A	L/R = 40 ms
125 Vdc	0.30 A	L/R = 40 ms
250 Vdc	0.20 A	L/R = 40 ms

Cyclic (2.5 Cycles/Second) per IEC 60255-0-20:1974:

24 Vdc	0.75 A	L/R = 40 ms
48 Vdc	0.50 A	L/R = 40 ms
125 Vdc	0.30 A	L/R = 40 ms
250 Vdc	0.20 A	L/R = 40 ms

AC Output Ratings

Maximum Operational Voltage (U_e) Rating: 240 Vac

Insulation Voltage (U_i) Rating (excluding EN 61010-1): 300 Vac

Contact Rating Designation: B300

B300 (5 A Thermal Current, 300 Vac Max)			
	Maximum Current		Max VA
Voltage	120 Vac	240 Vac	—
Make	30 A	15 A	3600
Break	3 A	1.5 A	360
PF < 0.35, 50–60 Hz			

Utilization Category: AC-15

One-Second Thermal: 50 A

AC-15		
Operational Voltage (Ue)	120 Vac	240 Vac
Operational Current (Ie)	3 A	1.5 A
Make Current	30 A	15 A
Break Current	3 A	1.5 A
Electromagnetic loads > 72 VA, PF < 0.3, 50–60 Hz		

Voltage Protection Across Open Contacts: 270 Vac, 80 J

Optoisolated Control Inputs (Internally Wetted to 24 Vdc)

Current Draw at Nominal DC Voltage: 4 mA typical

Rated Insulation Voltage (U_i): 300 Vac

Rated Impulse Withstand Voltage (U_{imp}): 5000 V

Pickup/Dropout Time: <20 ms

Time-Code Input

Format: Demodulated IRIG-B

On (1) State: Vih ≥ 2.2 V
Off (0) State: Vil ≤ 0.8 V

Input Impedance: 2 kΩ

Synchronization Accuracy Internal Clock: ±1 µs

All Reports: ±5 ms

Simple Network Time Protocol (SNTP) Accuracy Internal Clock: ±5 ms

Unsynchronized Clock Drift Relay Powered: 2 minutes per year, typically

Communications Ports

Standard EIA-232 (2 Ports)

Location: Front Panel
Rear Panel

Data Speed: 300–38400 bps

Ethernet Port

Dual 100BASE-FX (LC connector)

Standard Multimode Fiber-Optic Serial Port

Location: Rear Panel

Data Speed: 300–38400 bps

Fiber-Optic Ports Characteristics

Port 1 (or 1A, 1B) Ethernet

Wavelength: 1300 nm

Optical Connector Type: LC

Fiber Type: Multimode

Link Budget: 16.1 dB

Typical TX Power: –15.7 dBm

RX Min. Sensitivity: –31.8 dBm

Fiber Size: 62.5/125 µm

Approximate Range: ~6.4 km

Data Rate: 100 Mbps

Typical Fiber Attenuation: –2 dB/km

Port 2 Serial

Wavelength: 820 nm

Optical Connector Type: ST

Fiber Type: Multimode

Link Budget: 8 dB

Typical TX Power: –16 dBm

RX Min. Sensitivity: –24 dBm

Fiber Size: 62.5/125 µm

Approximate Range: ~1 km

Data Rate: 5 Mbps

Typical Fiber Attenuation: –4 dB/km

Communications Protocols

SEL, Modbus, DNP3, FTP, TCP/IP, Telnet, SNTP, IEC 61850, MIRRORED BITS

Operating Temperature

IEC Performance Rating (per IEC/EN 60068-2-1 and 60068-2-2): –40° to +85°C (–40° to +185°F)
I_SRC = 0.5 to 2.5 A, 85°C (185°F)
I_SRC = 2.5 to 5.0 A, 70°C (158°F)

UL Performance Rating: 40°C (104°F)

Operating Environment

Insulation Class: 1

Pollution Degree: 2

Overvoltage Category: II

Atmospheric Pressure: 80–110 kPa

Relative Humidity: 5%–95%, noncondensing

Maximum Altitude Without Derating (Consult Factory for Higher Altitude Derating): 2000 m

Dimensions

Surface Mounting

Width: 26.12 cm (10.28 in) maximum

Depth: 13.21 cm (5.2 in) maximum (includes mounting brackets)

Height: 26.54 cm (10.45 in) maximum (includes mounting brackets)

Panel Mounting

Width: 19.12 cm (7.53 in) maximum

Depth: 26.11 cm (10.28 in) maximum

Height: 23.70 cm (9.33 in) maximum

Rack Mounting

Width:	48.26 cm (19 in) maximum
Depth:	26.11 cm (10.28 in) maximum
Height:	26.59 cm (10.47 in) maximum

Weight

Wall Mount:	4.02 kg (8.87 lbs)
Panel Mount:	4.69 kg (10.33 lbs)
Rack Mount:	7.96 kg (17.55 lbs)

#6 Ground Screw and #6 Chassis Screw Tightening Torque

Minimum:	1.13 Nm (10 in-lb)
Maximum:	1.36 Nm (12 in-lb)

#8 Chassis and Wall Mount Bracket Screw Tightening Torque

Minimum	1.24 Nm (11 in-lb)
Maximum:	1.47 Nm (13 in-lb)

#6 Captive Screw in Front Bezel, Screw Tightening Torque for Panel/ Rack Mount Options

Minimum:	1.13 Nm (10 in-lb)
Maximum:	1.36 Nm (12 in-lb)

1/4-20 Hex Nut Tightening Torque for Panel/ Rack Mount Options

Minimum:	5.08 Nm (45 in-lb)
Maximum:	6.21 Nm (55 in-lb)

Terminal Connections for Terminal Blocks A, B, and C

Compression Plug Tightening Torque

Minimum:	0.5 Nm (4.43 in-lb)
Maximum:	0.6 Nm (5.31 in-lb)

Compression Plug Mounting Ear Screw Tightening Torque

Minimum:	0.2 Nm (1.77 in-lb)
Maximum:	0.3 Nm (2.65 in-lb)

Terminal Connections for Terminal Block D

Compression Plug Tightening Torque

Minimum:	0.5 Nm (4.43 in-lb)
Maximum:	0.7 Nm (6.19 in-lb)

Compression Plug Mounting Ear Screw Tightening Torque

Minimum:	0.5 Nm (4.43 in-lb)
Maximum:	0.7 Nm (6.19 in-lb)

Wire Sizes

Use 105°C-rated wiring. Wire sizes for grounding (earthing) and power connections are dictated by the terminal blocks and expected load currents. Use the following table as a guide in selecting wire sizes.

Refer to *SEL Application Note AN2014-08* for wiring and termination guidance. Strip the wires 8 mm (0.31 in) for termination and installation.

	Wire Size	
Connection Type[a]	**Minimum**	**Maximum**
Grounding (Earthing)	18 AWG (0.8 mm^2)	14 AWG (2.1 mm^2)
Power	16 AWG (1.3 mm^2)	14 AWG (2.1 mm^2)
Current (IN)	18 AWG (0.8 mm^2)	14 AWG (2.1 mm^2)
Potential (Voltage) (VN)	12 AWG (3.3 mm^2)	10 AWG (6.0 mm^2)
Contact I/O	18 AWG (0.8 mm^2)	14 AWG (2.1 mm^2)

[a] For all connection types, the insulation voltage must be 300 V minimum.

Product Standards

Measuring Relays and Protection Equipment:	IEC 60255-26:2013 IEC 60255-27:2013

Type Tests

Environmental Tests

Enclosure Protection:	IEC 60529:2001 + CRDG:2003 IP20 for terminals
Vibration Resistance:	IEC 60255-21-1:1998 IEC 60255-27:2013; Section 10.6.2.1
Endurance:	Class 1 (Class 2 for wall mount only)
Response:	Class 2
Shock Resistance:	IEC 60255-21-2:1998 IEC 60255-27:2013; Section 10.6.2.2 IEC 60255-27:2013; Section 10.6.2.3
Withstand:	Class 1
Response:	Class 2
Bump:	Class 1
Seismic (Quake Response):	IEC 60255-21-3:1993 IEC 60255-27:2013; Section 10.6.2.4
Response:	Class 2
Cold:	IEC 60068-2-1:2007 IEC 60255-27:2013; Section 10.6.1.2 IEC 60255-27:2013; Section 10.6.1.4 –40°C, 16 hours
Dry Heat:	IEC 60068-2-2:2007 IEC 60255-27:2013; Section 10.6.1.1 IEC 60255-27:2013; Section 10.6.1.3 85°C, 16 hours
Damp Heat, Steady State:	IEC 60068-2-78:2001 IEC 60255-27:2013; Section 10.6.1.5 40°C, 93% relative humidity, 10 days
Damp Heat, Cyclic:	IEC 60068-2-30:2001 IEC 60255-27:2013; Section 10.6.1.6 25–55°C, 6 cycles, 95% relative humidity

Dielectric Strength and Impulse Tests

Dielectric (HiPot):	IEC 60255-27:2013; Section 10.6.4.3 IEEE C37.90-2005 2.5 kVac on contact outputs 3.6 kVdc on power supply IN, VN, contact input terminals
Impulse:	IEC 60255-27:2013; Section 10.6.4.2 Severity Level: 0.5 J, 5 kV IEEE C37.90:2005 Severity Level: 0.5 J, 5 kV

RFI and Interference Tests

EMC Immunity

Electrostatic Discharge Immunity:	IEC 61000-4-2:2008 IEC 60255-26:2013; Section 7.2.3 IEEE C37.90.3:2001 Severity Level 4 8 kV contact discharge 15 kV air discharge
Radiated RF Immunity:	IEC 61000-4-3:2010 IEC 60255-26:2013; Section 7.2.4 10 V/m IEEE C37.90.2-2004 20 V/m
Fast Transient, Burst Immunity*:	IEC 61000-4-4:2012 IEC 60255-26:2013; Section 7.2.5 4 kV at 5.0 kHz 2 kV at 5.0 kHz for comm. ports
Surge Immunity*:	IEC 61000-4-5:2005 IEC 60255-26:2013; Section 7.2.7 1 kV line-to-line 2 kV line-to-earth

Surge Withstand Capability Immunity*:	IEC 61000-4-18:2010 IEC 60255-26:2013; Section 7.2.6 2.5 kV common mode 1 kV differential mode 1 kV common mode on comm. ports IEEE C37.90.1-2002 2.5 kV oscillatory 4 kV fast transient
Conducted RF Immunity:	IEC 61000-4-6:2008 IEC 60255-26:2013; Section 7.2.8 10 Vrms
Magnetic Field Immunity:	IEC 61000-4-8:2009 IEC 60225-26:2013; Section 7.2.10 Severity Level: 1000 A/m for 3 seconds 100 A/m for 1 minute; 50/60 Hz IEC 61000-4-9:2001 Severity Level: 1000 A/m IEC 61000-4-10:2001 Severity Level: 100 A/m (100 kHz and 1 MHz)
Power Supply Immunity:	IEC 61000-4-11:2004 IEC 61000-4-17:1999 IEC 61000-4-29:2000 IEC 60255-26:2013; Section 7.2.11 IEC 60255-26:2013; Section 7.2.12 IEC 60255-26:2013; Section 7.2.13

EMC Emissions

Conducted Emissions:	IEC 60255-26:2013 Class A FCC 47 CFR Part 15.107 Class A ICES-003 Issue 6 EN 55011:2009 + A1:2010 Class A EN 55022:2010 + AC:2011 Class A EN 55032:2012 + AC:2013 Class A CISPR 11:2009 + A1:2010 Class A CISPR 22:2008 Class A CISPR 32:2015 Class A
Radiated Emissions:	IEC 60255-26:2013 Class A FCC 47 CFR Part 15.109 Class A ICES-003 Issue 6 EN 55011:2009 + A1:2010 Class A EN 55022:2010 + AC:2011 Class A EN 55032:2012 + AC:2013 Class A CISPR 11:2009 + A1:2010 Class A CISPR 22:2008 Class A CISPR 32:2015 Class A

* Front-port serial cable (non-fiber) lengths assumed to be < 3 m.

Processing Specifications and Oscillography

AC Voltage and Current Inputs:	32 samples per power system cycle (based on FNOM)
Digital Filtering:	Fundamental, third-harmonic, and rms quantities are updated every 1/4 cycle in accordance with nominal frequency setting FNOM. Insulation resistance, insulation capacitance, and the NGR measurements are updated every 20 cycles.
Protection and Control Processing:	Processing interval is 4 times per power system cycle (except for math variables and analog quantities, which are processed every 25 ms).

Oscillography

Length:	180 cycles
Sampling Rate:	32 samples per cycle, unfiltered
Trigger:	Programmable with Boolean expression
Format:	Compressed ASCII
Time-Stamp Resolution:	1 ms
Time-Stamp Accuracy:	±5 ms

Sequential Events Recorder

Time-Stamp Resolution:	1 ms
Time-Stamp Accuracy (with respect to time source):	±5 ms

Relay Elements

Stator Ground (64S)

Pickup Range:	OFF, 0.1 kΩ–10 kΩ primary*
Pickup/Measurement Accuracy, Steady State:	±10% of pickup ±50 Ω for pickup ≤2 kΩ ±15% pickup for 2 kΩ < pickup ≤10 kΩ (NGR reflected on the primary side is between 500–6000 Ω)
Time Delay Range:	0.1–400.0 seconds
Time Delay Accuracy:	±0.1% of user setting, ±4.2 ms at 60 Hz

* Metering for stator insulation resistance to ground is supported as high as 99 kΩ. Values higher than 10 kΩ are used for indication only and are not suitable for stator ground resistance trending purposes.

Neutral Grounding Resistor (NGR) Monitor

NGR Short Pickup Range:	OFF, 0.01 Ω–4000 Ω
NGR Open Pickup Range:	OFF, 0.1 Ω–4000 Ω
Pickup Accuracy:	±10% of user setting plus ±0.01 Ω*

* Accuracy specification applies when no stator insulation fault is present.

Neutral Fundamental Overvoltage (59N)*

Pickup Range:	OFF, 2.5–150.0 V
Pickup Accuracy:	±5% of user setting plus ±1 V
Time Delay Range:	0.1–400.0 seconds
Time Delay Accuracy:	±0.1% of user setting plus ±4.2 ms at 60 Hz

* The SEL-2664S uses the nominal frequency (setting FNOM) for the fundamental. The terms fundamental and nominal are used interchangeably when referring to frequency in this manual.

Neutral RMS Overvoltage (59NRMS)

Pickup Range:	OFF, 2.5–150.0 V
Pickup Accuracy:	±5% of user setting plus ±1 V
Time Delay Range:	0.1–400.0 seconds
Time Delay Accuracy:	±0.1% of user setting plus ±4.2 ms at 60 Hz

Rotor Field Ground Protection (64F)

(Optional—Requires an SEL-2664)

Pickup Range:	OFF, 0.5 kΩ–200 kΩ*
Pickup Accuracy, Steady State:	±5% ±500 Ω for 48 ≤ field voltage ≤ 825 Vdc ±5% ±20 kΩ for 825 ≤ field voltage ≤ 1500 Vdc
Pickup Time:	≤2 s if the injection frequency in the SEL-2664 is selected at 1 Hz ≤8 s if the injection frequency in the SEL-2664 is selected at 0.25 Hz
Time Delay Range:	0.1–400.0 seconds
Time Delay Accuracy:	±0.5% ±5 ms

* Insulation resistance metering is supported as high as 20 MΩ; protection is supported as high as 200 kΩ.

Metering

Accuracies are specified at 20°C, nominal frequency, unless otherwise noted.

I_SRC (Injection Source Current) Magnitude Accuracy: ± 5% plus ± 0.05 mA

IN (Neutral Current) Magnitude Accuracy: ± 5% plus ± 0.05 mA

When Setting	Amplifier 1.0	Amplifier 2.0
CTN_LOC = SEC	1–16 mA rms	3–60 mA rms
CTN_LOC = PRIM	1–16 mA rms	0.5–8.0 mA rms

Stator Ground Insulation Resistance: ±10% of Rf ±50 Ω for Rf ≤ 2 kΩ*
±15% of Rf for 2 kΩ < Rf ≤ 10 kΩ*
(Rf = stator insulation resistance to ground)

Rotor Field Insulation Resistance: ±5% ±500 Ω for 48 Vdc ≤ field voltage ≤ 825 Vdc
±5% ±20 kΩ for 825 Vdc ≤ field voltage ≤ 1500 Vdc

VN (Neutral Voltage) (within 2.5–240 V secondary): ±5% plus ±1 V

* Typical. Measurement accuracy is affected by installation-specific factors such as NGR location, injection transformer heating, accurate knowledge of the NGR tap ratio, etc. The highest value displayed is 99.99 kΩ. Measurement accuracy improves at lower insulation resistances.

SEL-4664 Calibration Module

Compliance

Product Safety: UL 61010-1 2019
CSA C22.2 61010-1 2018
IEC 61010-1 2019
UL 61010-2-201 2018
CSA C22.2 61010-2-201 2018
IEC 61010-2-201 2017

EMC Requirements: UL 61326-1 2013
IEC 61326-1 2012

Environment

Environment Conditions: Indoor only

Altitude: 2000 m

Humidity: 80%

Temperature: 0°–40°C

Overvoltage Category: II

Misc.

Input Voltage: 0–84 V

Input Current: 0–2.5 A

Fuse Rating: Fast blow 3 A 240 V

Power Supply: Use 9 V alkaline battery

SECTION 2

Installation

Overview

The first steps in applying the SEL-2664S are installing and connecting the relay. This section describes common installation features and requirements.

NOTE: Refer to SEL Application Note AN2014-08 for wiring and termination guidance. Strip the wires 8 mm (0.31 in) for termination and installation.

To install and connect the relay safely and effectively, you must be familiar with relay configuration features and options. You should carefully plan relay placement, cable connections, and relay communication.

This section contains drawings of typical ac and dc connections to the SEL-2664S. Use these drawings as a starting point for planning your particular relay application.

Relay Placement

Proper placement of the SEL-2664S helps to ensure years of trouble-free generator protection. Use the following guidelines for proper physical installation of the SEL-2664S.

Physical Location

The SEL-2664S is UL 508-rated for Installation/Overvoltage Category II and Pollution Degree 2. The SEL-2664S should be installed in an indoor or outdoor (extended) tool-accessible enclosure that does not exceed the temperature and humidity ratings for the relay. In either environment, the module should be protected from direct sunlight, precipitation, and full wind pressure, and personnel should be restricted from accessing hazardous parts. The unit shall be installed in a vertical orientation allowing natural air flow over the cooling fins.

The SEL-2664S should be mounted in the immediate vicinity of the grounding resistor, thus minimizing the VN injection circuit length and the associated wire resistance. Any significant variation in the wire resistance should be minimized because it can adversely affect the accuracy of the insulation resistance measurement, particularly at low NGR values (e.g., below 0.5 Ohm secondary). When using test switches in the injection circuit (a common practice in North America), SEL recommends that you add a third test switch and gang them all together. The third test switch would be wired to IN01, which is already included in the default E64S setting. When configured this way, the relay will automatically stop injecting when the test switches are opened and resume injecting when they are closed.

When the SEL-2664S is mounted away from the NGR, the length of the injection and CTN circuits must be limited to 330 ft (100 m). Regardless of the length of the injection circuit, the minimum wire gauge used in the injection circuit must

be 10 AWG (6 mm^2). This requirement applies to portions of the circuit that are inside panels or cabinets or are in between different locations. See *Recommendations for Optimum Performance* for injection circuit lead resistance details.

You can place the relay in extreme temperature and humidity locations. (See *Operating Temperature* and *Operating Environment* on page 1.9.) For UL 508 certification, the SEL-2664S rating is 2000 m (6562 ft) above mean sea level.

Relay Mounting

NOTE: When the relay is installed inside a sealed cabinet, make sure the SEL-2664S can dissipate 70 W of heat during operation without exceeding the maximum internal temperature limit of the cabinet. See *Specifications* on page 1.8 for more details.

The SEL-2664S is available in three mounting options: wall mount, rack mount, and panel mount. The wall-mount option is standard with the SEL-2664S. The panel-mount and rack-mount options do not come standard and must be ordered separately. Note that to convert the SEL-2664S from one mounting option to the other, you can order the SEL-2664S Mounting Conversion Kit (SEL Part No. 915900310).

The SEL-2664S comes with two faceplates located on the front and the side (see *Figure 2.1*). On a wall mount, the side faceplate faces you. On rack and panel mounts, the front faceplate faces you.

Figure 2.1 SEL-2664S Front and Side Faceplates

Wall Mount

NOTE: Ensure that all cables are routed a minimum of one inch away from the SEL-2664S to allow for airflow over the relay's heat sink.

SEL offers the SEL-2664S in a wall-mount version for convenient mounting. Refer to the MOT (Model Option Table) to order the SEL-2664S in the wall-mount version. SEL ships wall-mount brackets with the SEL-2664S for a wall-mount version order. The wall-mount brackets can be screwed directly on a wall with four #12-24 UNC screws. *Figure 2.2* shows the SEL-2664S with wall-mount brackets.

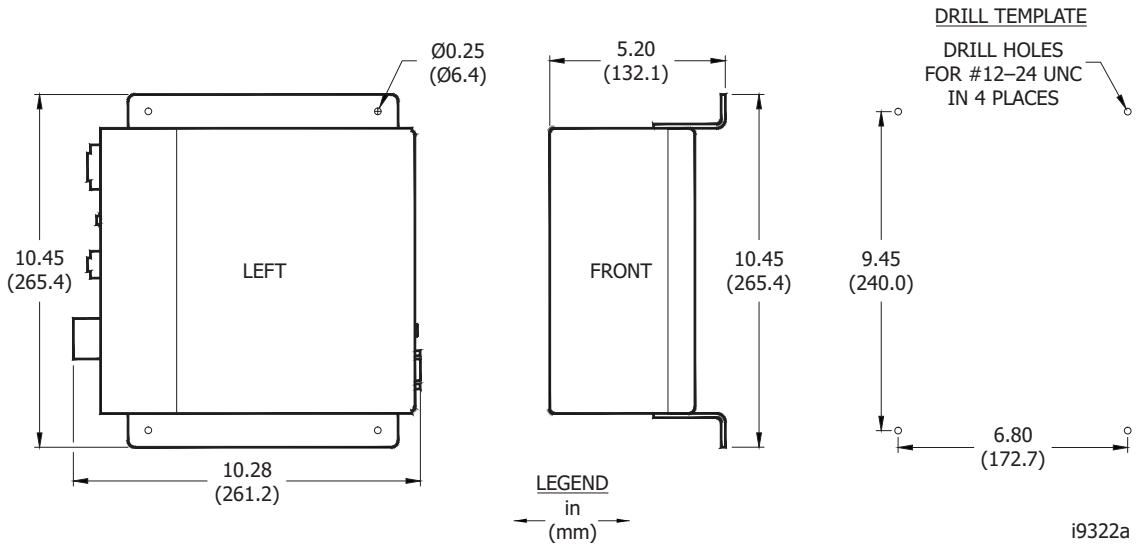

Figure 2.2 SEL-2664S Wall-Mount Dimensions

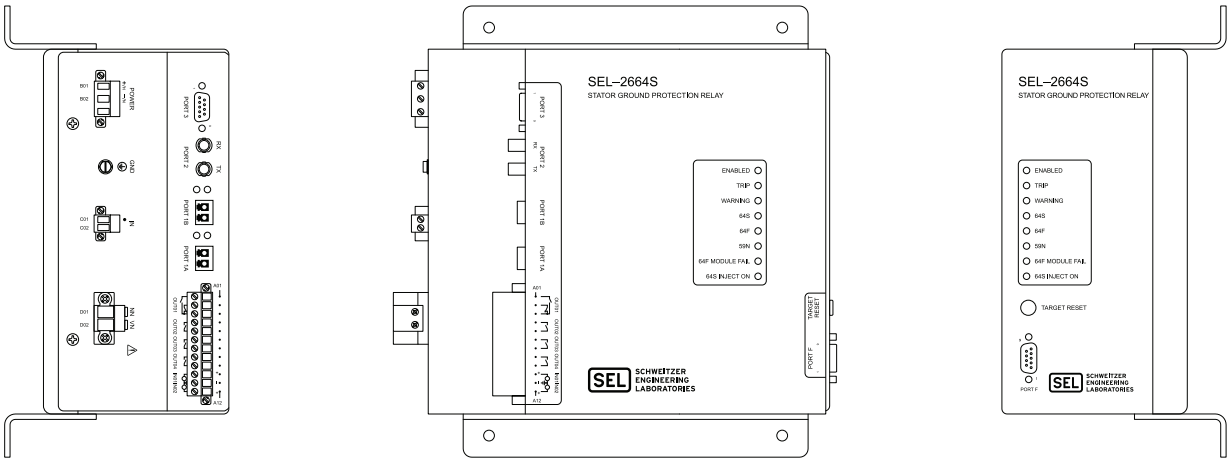

Figure 2.3 SEL-2664S Connection Diagram for Wall-Mount Option

Figure 2.4 Side View of Wall-Mounted SEL-2664S

Panel Mount

SEL also offers the SEL-2664S in a panel-mount version. Refer to the Model Option Table to order the SEL-2664S in a panel-mount version. Follow the steps below to install the module onto a panel.

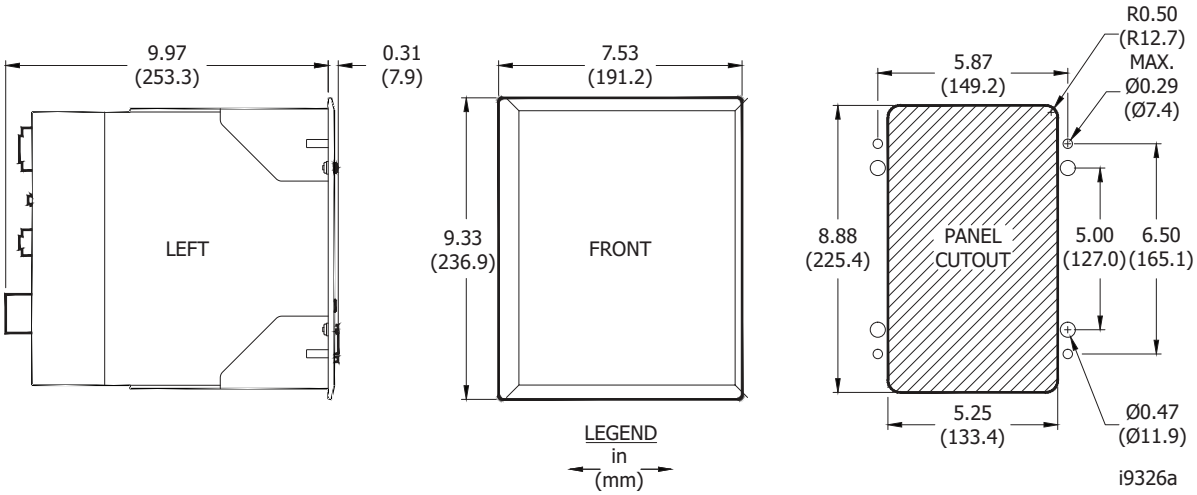

Figure 2.5 SEL-2664S Panel-Mount Dimensions

Step 1. Cut a hole 5.25 inches x 8.88 inches (width x height) on the panel (see *Figure 2.5* for panel cutout dimensions).

Step 2. Carefully mark the panel with the locations for the four holes and the four ears as shown in *Figure 2.5*.

Step 3. Drill out the four holes in *Step 2* with a 0.29-inch drill bit. Drill the four ears with a 0.469-inch drill bit.

Step 4. Insert the SEL-2664S through the cutout, and align the four studs through the holes.

Step 5. Secure the SEL-2664S to the panel with the four ¼–20 hex nuts.

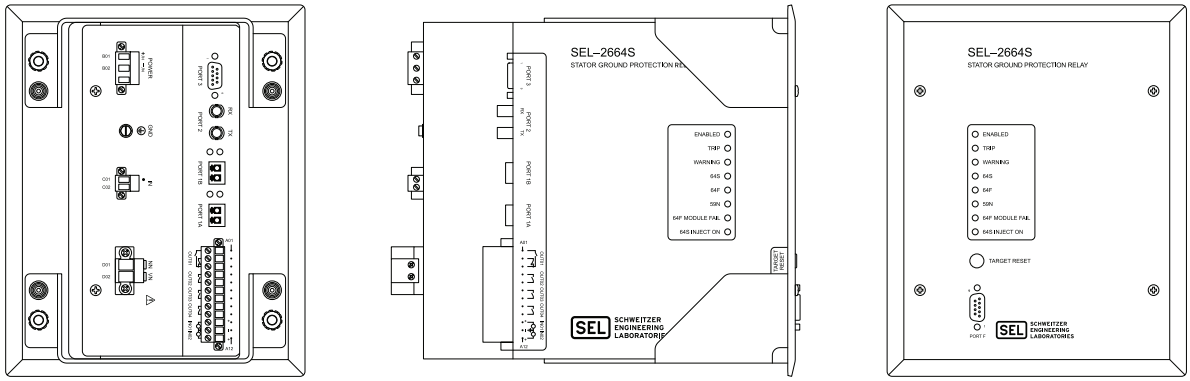

Figure 2.6 SEL-2664S Connection Diagram for Rack and Panel-Mount Option

Figure 2.7 Side View of Panel-Mounted SEL-2664S

Rack Mount

The SEL-2664S can be mounted in a standard 19-inch rack. Refer to the Model Option Table to order the SEL-2664S in a rack-mount version. SEL ships a rack-mount panel with the SEL-2664S for a rack-mount version order (see *Figure 2.8*). Follow the steps below to install the SEL-2664S in a 19-inch rack.

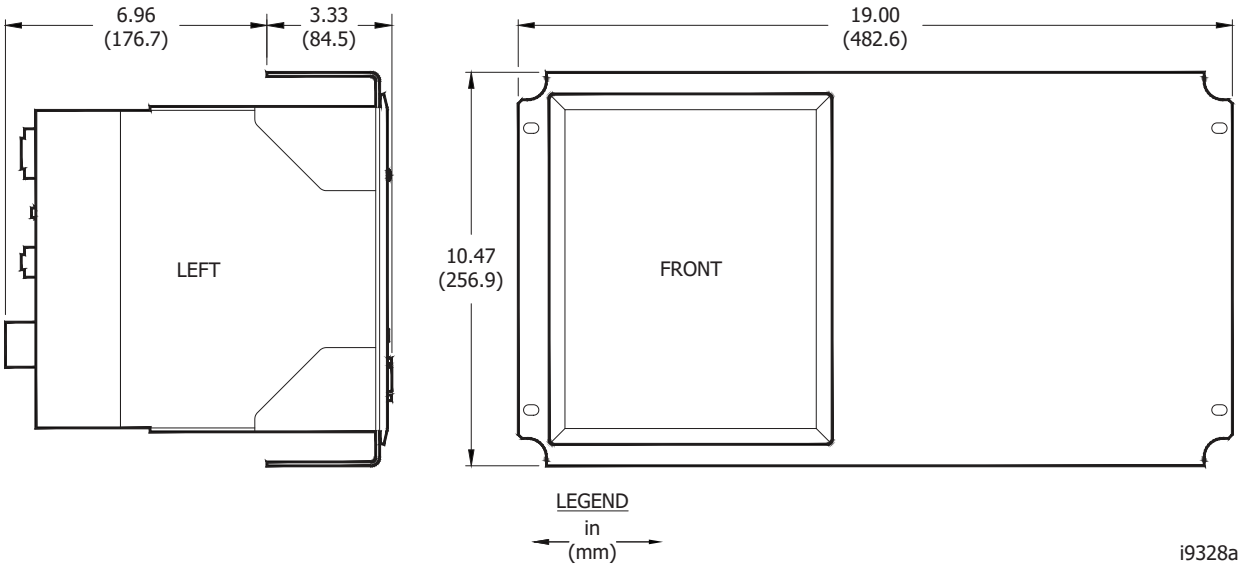

Figure 2.8 SEL-2664S Rack-Mount Dimensions

Step 1. Install the supplied rack-mount panel in the rack (see *Figure 2.8* for the rack-mount panel dimensions).

Step 2. Insert the SEL-2664S through the cutout, and align the four studs through the holes.

Step 3. Secure the SEL-2664S to the rack-mount panel with the four ¼–20 hex nuts provided.

Figure 2.9 Front View of Rack-Mounted SEL-2664S

Relay Connections

Password and SELBOOT Jumper Selection

Figure 2.10 shows the major components of the CPU/Comm Card in the unit.

Notice the three sets of pins labeled A, B, and C.

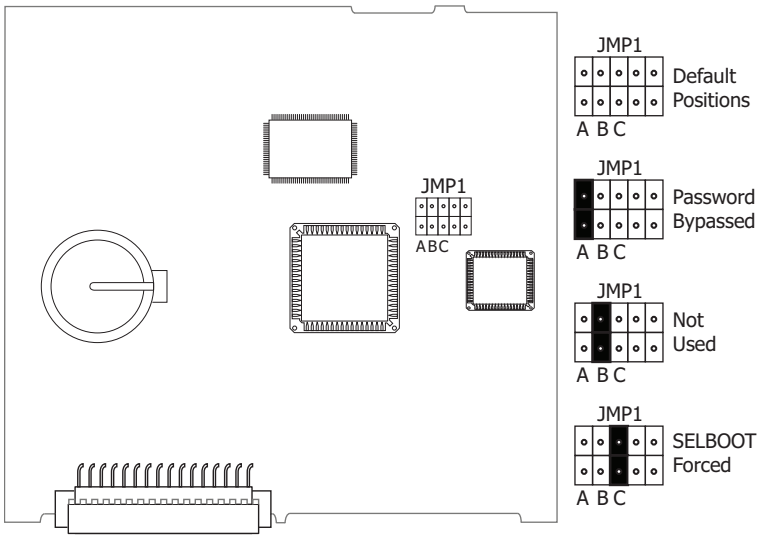

Figure 2.10 Pins for Password and SELBOOT Jumper

Pins labeled A bypass the password requirement and pins labeled C force the relay to the SEL operating system called SELBOOT (pins labeled B are not used). In the unlikely event that the SEL-2664S suffers an internal failure, communication with the relay can be compromised. Forcing the relay to SELBOOT provides a means of downloading new firmware. To force the relay to SELBOOT, position the jumper in Position C, as shown in *Figure 2.10* (SELBOOT forced). Once the relay is forced to SELBOOT, you can communicate with the relay only through the front-panel port.

To gain access to Level 1 and Level 2 command levels without passwords, position the jumper in position A, as shown in *Figure 2.10* (password bypassed). Although you gain access to Level 2 without a password, the alarm contact still closes momentarily when you access Level 2. *Table 2.1* tabulates the functions of the three sets of pins and jumper default positions.

Table 2.1 Jumper Functions and Default Positions

Pins	Jumper Default Position	Description
A	Not bypassed (requires password)	Password bypass
B	Not used	Not used
C	Not bypassed (not forced SELBOOT)	Forced SELBOOT

To access the jumpers on the CPU/Comm card, perform the following steps:

Step 1. De-energize the relay and its inputs.

Step 2. Disconnect all the wiring connectors from the relay and take the relay out of its mounting.

Step 3. Remove all the screws from the relay, then carefully remove the front and side covers of the relay.

Step 4. Remove the panel separating the power supply board and the CPU/Comm board by lifting it.

Step 5. Locate the jumpers on the CPU/Comm board. Refer to *Figure 2.10*.

Step 6. Change the position of the jumpers as required.

Step 7. Carefully put the panel separating the power supply board and CPU/Comm board back in position.

Step 8. Make sure the panel tabs engage the slots in the chassis wall and the panel sits properly on the studs on the other side.

Step 9. Replace the relay side cover and the front cover.

Step 10. Put in all the screws. Reinstall the relay with all the wiring connectors and energize.

NOTE: Contact the factory for assistance if the SEL-2664S needs a jumper change or a clock battery replacement.

Follow the same steps to access the clock battery as well.

Power Connections

⚠DANGER
Contact with instrument terminals can cause electrical shock that can result in injury or death.

⚠CAUTION
Equipment components are sensitive to electrostatic discharge (ESD). Undetectable permanent damage can result if you do not use proper ESD procedures. Ground yourself, your work surface, and this equipment before removing any cover from this equipment. If your facility is not equipped to work with these components, contact SEL about returning this device and related SEL equipment for service.

The **POWER** terminals on the rear panel (**BO1(+/H)** and **BO2(−/N)**) must connect to a reliable power source (see *Power Supply* on page 1.8 for complete power input specifications). The **POWER** terminals are isolated from chassis ground. Use a 14 AWG (2.1 mm^2) to 16 AWG (1.3 mm^2) size wire to connect to the **POWER** terminals.

For compliance with IEC 60947-1 and IEC 60947-3, place a suitable external switch or circuit breaker in the power leads for the SEL-2664S; this device should interrupt both the hot (+/**H**) and neutral (-/**N**) power leads. The maximum rating for the power disconnect circuit breaker or optional overcurrent device (fuse) should be 20 A, 300 V.

Grounding (Earthing) Connections

You must connect the ground terminal labeled **GND** on the rear panel to a rack frame or switchgear ground for proper safety and performance. Use 14 AWG (2.1 mm^2) to 18 AWG (0.8 mm^2) wire shorter than 2 m (6.6 ft) for the ground connection.

Serial Ports

Because all ports (**F**, **2**, and **3**) are independent, you can communicate to any combination simultaneously. Port F and Port 3 EIA-232 ports accept 9-pin D-subminiature male connectors. Relay installation should ensure that the front-panel Port F remains accessible for maintenance and firmware upgrades.

For connecting devices at distances over 32 feet, where metallic cable is not appropriate, SEL offers fiber-optic transceivers or the fiber-optic port. The SEL-2800 family of transceivers provides fiber-optic links between devices for electrical isolation and long-distance signal transmission. Contact SEL for further information on these products.

Fiber-Optic Port

The SEL-2664S includes a fiber-optic EIA-232 serial port, which is compatible with the SEL-2812 (with IRIG-B), the SEL-2814 Fiber-Optic Transceivers, and the SEL-2664.

IRIG-B Time-Code Input

The SEL-2664S accepts a demodulated IRIG-B time signal on PORT 2 or PORT 3 to synchronize the internal clock with an external source. Two options for the IRIG-B signal input are given, but use only one at a time. An SEL communications processor via EIA-232 serial PORT 3, or the fiber-optic serial PORT 2 can be used. Also, the SEL-2401, SEL-2404, or SEL-2407 can be used as a time source.

The second option for IRIG-B is via fiber-optic serial PORT 2. Use an SEL-2812MT Transceiver to connect to an SEL communications processor and bring the IRIG-B signal with the EIA-232 input. Use a fiber-optic cable pair with ST connectors (C805 or C807) to connect to PORT 2 on the SEL-2664S. Refer to *Section 7: Communications* for details on IRIG-B connection examples and for details about using an SEL-2401/2407/2404 as a time source.

Ethernet Port

The SEL-2664S has dual fiber-optic 100BASE-FX Ethernet ports. Connect to PORT 1 of the relay by using an LC connector for the fiber-optic Ethernet port.

Digital Inputs

Optoisolated digital inputs IN01 and IN02 are located on Terminal A and are internally wetted to 24 Vdc. Input IN01 is available on terminals A10 and A11 and IN02 is available on terminals A12 and A11. Terminal A11 is common for both the digital inputs.

Digital Outputs

Output contacts OUT01, OUT02, OUT03, and OUT04 are located on Terminal A. Output OUT01 is a Form C output and is normally open between Terminals A01–A03 and is normally closed between Terminals A02–A03. The output contacts OUT02, OUT03, and OUT04 are Form A outputs and are available on Terminals A04–A05, A06–A07, and A08–A09.

Fail-Safe/ Nonfail-Safe Operation

This section describes fail-safe versus nonfail-safe tripping and describes the ac and dc wiring diagrams for the following applications:

Figure 2.11 shows the output **OUT01** relay coil and Form C contact. When the relay coil is de-energized, the contact between **A03** and **A01** is open while the contact between **A03** and **A02** is closed.

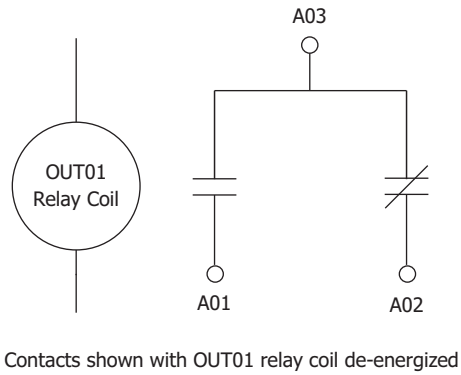

Figure 2.11 OUT01 Relay Output Contact Configuration

The SEL-2664S provides fail-safe and nonfail-safe modes (setting selectable) for all output contacts. The following occurs in fail-safe mode:

- The relay coil energizes continuously if the SEL-2664S is powered and the Relay Word OUTxx deasserts.
- When the Relay Word OUTxx asserts, the relay coil de-energizes.
- The relay coil also de-energizes if the SEL-2664S power supply voltage is removed or if the SEL-2664S fails (self-test status is FAIL).

Relay Features and Connections

Figure 2.12 shows the relay features and connections and all the wiring terminal blocks labeled A through D as shown.

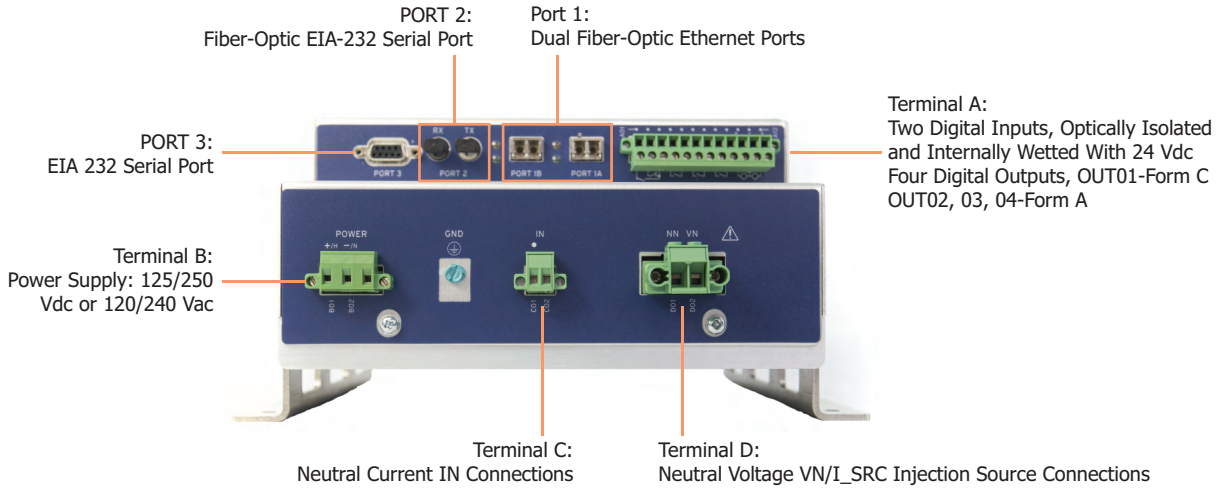

Figure 2.12 Relay Features and Connections

- Power supply rating of 125/250 Vdc or 120/240 Vac (Amplifier Version 2.0).
- Optoisolated inputs **IN01** and **IN02** are located on the card in Terminal A and are internally wetted to 24 Vdc.
- Output contacts **OUT01**, **OUT02**, **OUT03,** and **OUT04** are located on the card in Terminal A.
- The fiber-optic **PORT 2** uses a Simplex 62.5/125 µm fiber-optic cable to connect the SEL-2664S with an SEL-2664. This fiber-optic cable should be 1000 meters or shorter.
- The chassis ground connector located on the rear panel next to Terminal B must always be connected to the local ground mat.

Typical Application Connection Diagrams

⚠DANGER
Turn off the relay during a generator maintenance outage. Contact with high voltage on the primary side of the NGT can cause electrical shock resulting in injury or death.

⚠DANGER
Disconnect or de-energize all external connections before opening this device. Contact with hazardous voltages and currents inside this device can cause electrical shock resulting in injury or death.

The SEL-2664S typically uses the neutral grounding transformer (NGT) to inject the signal I_SRC (see *Figure 1.1*) required to measure the stator ground insulation resistance. For safety reasons, turn off the SEL-2664S during a generator maintenance outage to avoid contact with high voltage on the primary side of the NGT.

Figure 2.13 and *Figure 2.14* show ac connections for an SEL-2664S with the NGR on the secondary side of the neutral grounding transformer. The CTN can be located on either the secondary side as shown or the primary side in each configuration (e.g., as shown by the dotted lines in *Figure 2.13*) to suit specific applications (see *Setting Suggestions and Comments* on page 4.3 for more information).

NOTE: The NGT with two high side bushings is required when the CTN is located on the primary side (see *Figure 2.13* and *Figure 2.15*).

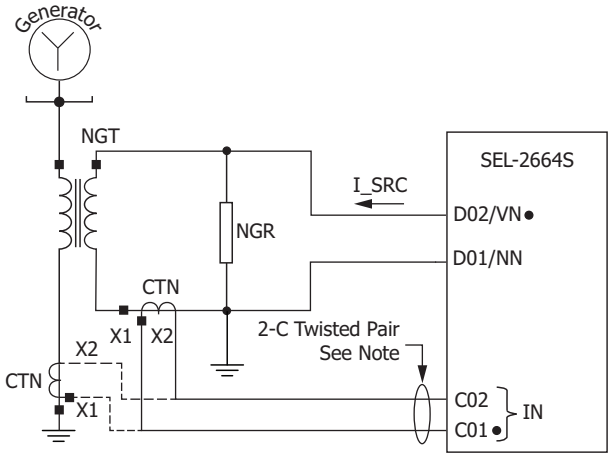

Note: Terminal C02 should be grounded if the relay with Amplifier Version 2.0 is used. Do not ground the CTN leads if Amplifier Version 1.0 (original) is used; the CO2 is internally grounded in Amplifier Version 1.0.

Figure 2.13 AC Connections With Neutral CBCT on the Secondary Side of the Neutral Grounding Transformer

NOTE: Field calibration is required for all applications. Refer to *Field Calibration Process* in *Section 10: Testing and Troubleshooting*. The field calibration procedure must be repeated if any changes are made to the application including CBCT location, NGR location, NGR ratings, and any changes in the cabling.

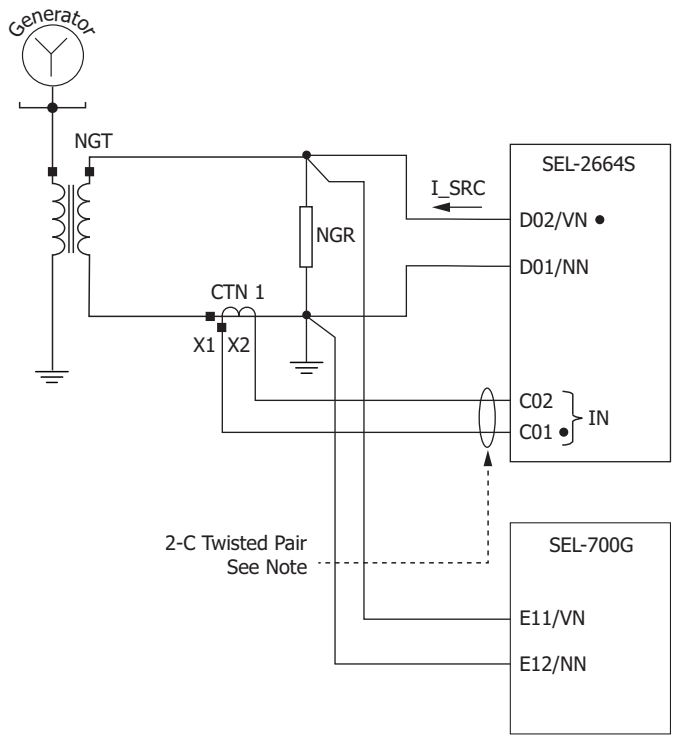

Note: Terminal C02 should be grounded if the relay with Amplifier Version 2.0 is used. Do not ground the CTN leads if Amplifier Version 1.0 (original) is used; the C02 is internally grounded in Amplifier Version 1.0.

Figure 2.14 AC Connections for SEL-2664S and SEL-700G Relays Shown With Neutral CTs on the Secondary Side of the Neutral Grounding Transformer

Figure 2.15 shows the ac connections for the SEL-2664S with a neutral voltage transformer and the NGR located directly on generator neutral.

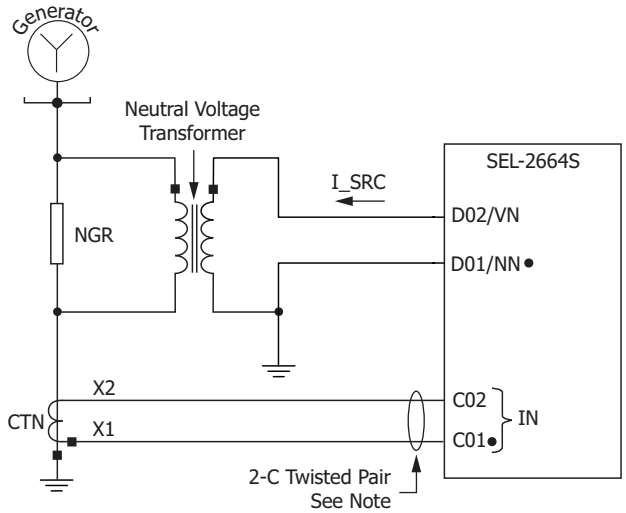

Note: Terminal C02 should be grounded if the relay with Amplifier Version 2.0 is used. Do not ground the CTN leads if Amplifier Version 1.0 (original) is used; the C02 is internally grounded in Amplifier Version 1.0.

Figure 2.15 AC Connections With Neutral CBCT on the Primary Side and Neutral Voltage Transformer

In this configuration, use a voltage transformer with dual primary bushings and with a continuous thermal rating of at least 5.0 kVA.

Figure 2.16 shows the ac connections with NGR in the secondary side of a wye-broken delta grounding transformer on the generator terminals.

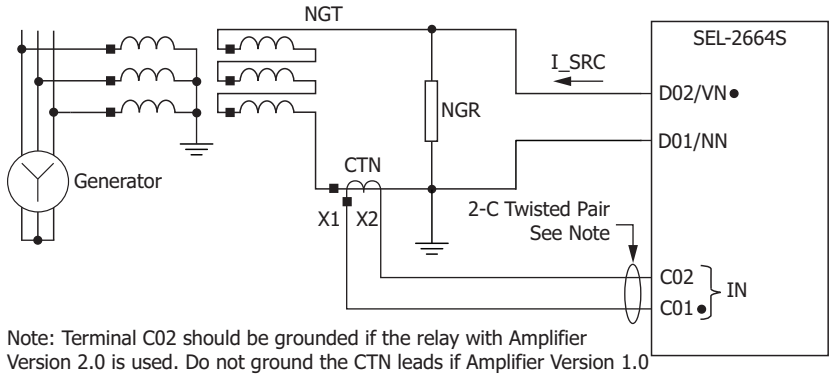

Note: Terminal C02 should be grounded if the relay with Amplifier Version 2.0 is used. Do not ground the CTN leads if Amplifier Version 1.0 (original) is used; the C02 is internally grounded in Amplifier Version 1.0.

Figure 2.16 AC Connections With NGR in the Secondary Side of a Wye-Broken Delta Grounding Transformer on the Generator Terminals

Figure 2.17 shows typical ac connections for protection using redundant relays shown with neutral CTs and the NGR on the secondary side of the neutral grounding transformer.

MODE_SRC = P_LOGIC allows an elaborate scheme that maximizes the use of all four injection frequencies in a redundant relays configuration. For technical assistance in applying a redundant relays scheme, contact SEL at 2664S_Support@selinc.com.

For details on the Injection Source Mode setting, MODE_SRC, refer to *Configuration Settings* in *Section 4: Protection and Logic Functions*.

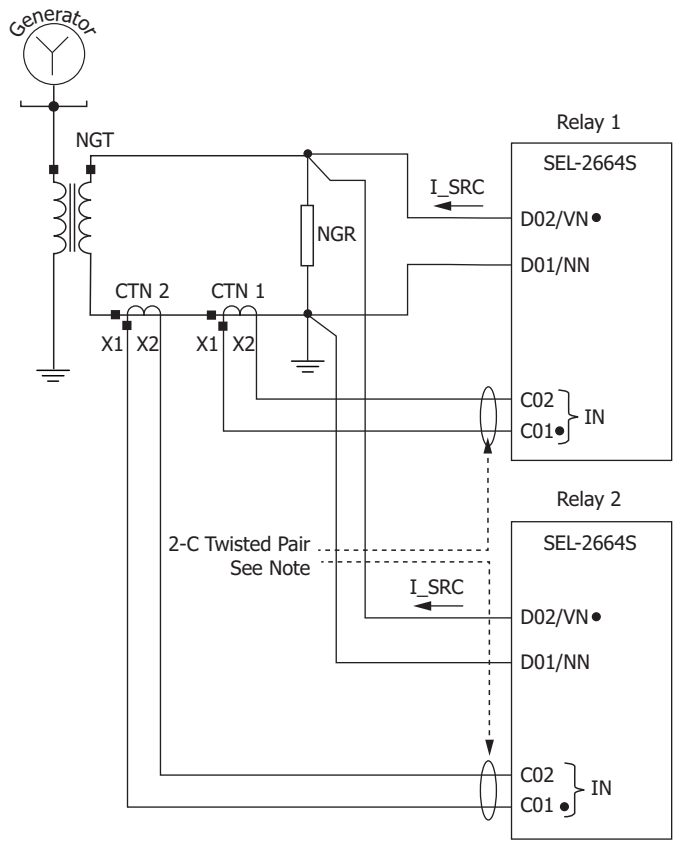

Note: Terminal C02 should be grounded if the relay with Amplifier Version 2.0 is used. Do not ground the CTN leads if Amplifier Version 1.0 (original) is used; the C02 is internally grounded in Amplifier Version 1.0.

Figure 2.17 AC Connections for Protection Using Redundant Relays Shown With Neutral CBCTs on the Secondary Side of the Neutral Grounding Transformer

The SEL-2664S is generally applied to single generators with high-resistance grounded neutral as shown in *Figure 2.13* through *Figure 2.17*. Similarly, it can also be applied to a parallel generators configuration if only one of the generators is grounded (e.g., cross-compound generators).

For two generators connected in parallel, each with high-resistance grounded neutral but sharing a common step-up transformer, the SEL-2664S cannot be used.

See *Figure 2.18* for a typical example of the dc connections for 100 percent stator ground protection using the SEL-2664S (stator-to-ground insulation resistance measurement) and the SEL-2664 (dc field-to-ground insulation resistance measurement).

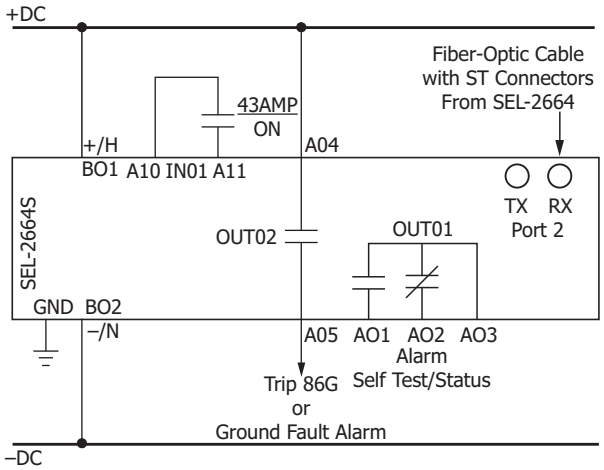

Figure 2.18 Typical DC Connections for an SEL-2664S Application

Application Considerations

NOTE: This section provides general guidelines for applying the SEL-2664S. See *Application Data* and *Element 64S Setting Guideline* for additional details.

Large utility generators are usually high resistance or resonant grounded systems with ground fault currents typically in the 1 A–10 A range. The SEL-2664S should only be applied to unit-connected, high-resistance grounded generator.

The SEL-2664S cannot be used with other types of generator grounding systems, including low-impedance (resistor or reactor) grounded, solidly grounded, and ungrounded configurations.

NOTE: The SEL-2664S uses the nominal frequency (setting FNOM) for the fundamental frequency when measuring voltage (VN) and current (IN) inputs. The terms fundamental and nominal are used interchangeably when referring to frequency in this manual.

You can use the SEL-2664S to provide protection at standstill and online. The SEL-2664S low-frequency injection function requires that VN/NN terminal voltage remains under 74 V peak (or 26 V for the original amplifier, Version 1.0). In the unlikely event that terminal voltage exceeds this level under normal operation (e.g., a voltage transient), the amplifier disconnects to protect the internal circuitry of the product. This disables 64S protection elements in the relay. However, the 59N1, 59NRMS, and 64F elements continue to protect the generator, and 64S elements are immediately restored when the voltage drops to the safe level.

Many generators produce varying amount of third-harmonic voltage during normal operation; however, when properly applied, 64S protection should remain in service under practical levels (typically up to 15 percent) of third-harmonic voltage.

The multisine signal injected by the SEL-2664S (see *Relay Functional Overview* on page 1.1) appears at the generator terminals in the form of a zero-sequence voltage component, which may adversely affect the performances of devices connected to the generator that use phase-ground generator voltage measurement. For example, the SEL-300G uses the zero crossing of the voltage input to measure the generator frequency, and the zero-sequence voltage from the SEL-2664S may cause erroneous frequency measurements if the SEL-300G uses a four-wire wye input (DELTA_Y = Y and wye/wye connected potential transformers). To mitigate issues caused by the zero-sequence voltage (including erroneous frequency measurements), configure the devices, such as the SEL-300G, to use a three-wire input (either wye/wye or open delta connected potential transformers). To see the SEL-300G connection diagrams for the three-wire input using delta and wye potential transformers, refer to the *SEL-300G Multifunction Generator*

Relay Instruction Manual, available at selinc.com. Frequency measurement algorithms used by the SEL-400G and SEL-700G generator relays are not affected by the subharmonic signal.

Design engineers in charge of generator protection and control schemes should evaluate the zero-sequence voltage sensitivity of all devices connected, including but not limited to automatic voltage regulators, turbine governors, protective relays, meters, transducers, and synchronizers.

Refer to *Setting Suggestions and Comments* on page 4.3 for calculating proper NGR_TAP to avoid disabling the 64S protection under normal operation. See *Figure 2.19* for basic ac connections using NGR Tap.

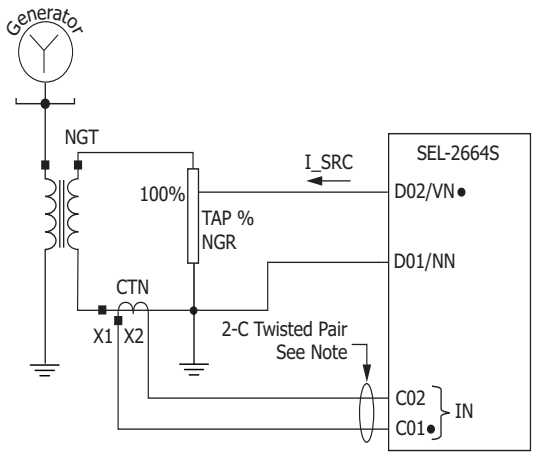

Note: Terminal C02 should be grounded if the relay with Amplifier Version 2.0 is used. Do not ground the CTN leads if Amplifier Version 1.0 (original) is used; the C02 is internally grounded in Amplifier Version 1.0.

Figure 2.19 Basic AC Connections Using the NGR Tap

The SEL-2664S relay is offered with the following neutral current sensors (CTN) accessories:

Table 2.2 SEL-2664S Neutral Current Sensor (CTN) Accessories

CTN Model	CTN Ratio	Vs[a]
Fanox CT-1/80-41070 (SEL Part No: 915900352)	500:1	5.0 V
Allen-Bradley 193-CBCT3 (SEL Part No: 915900286)	1000:1	6.7 V

[a] Saturation voltage (Vs) is based on secondary injection tests.

For Amplifier Version 2.0, see *Application Data* and *Element 64S Setting Guideline* for selection of the CTN ratio and location. Contact SEL for assistance on CTN selection for Amplifier Version 1.0.

Table 2.3 shows the recommended methods to create various effective ratios using either a 1000:1 or 500:1 sensor qualified by SEL.

Table 2.3 Methods to Create the Desired Effective CTN Ratio

Desired Effective Ratio	Method
250:1	Use a 500:1 CTN with two primary turns or use two 500:1 CTNs in parallel; each of these methods yields an effective CTN ratio of 250:1
2000:1[a]	Use a 1000:1 CTN with a 10 Ω (±0.1%, 3 W) shunt across CO1-C02 terminals of the SEL-2664S

Table 2.3 Methods to Create the Desired Effective CTN Ratio

Desired Effective Ratio	Method
3000:1[a]	Use a 1000:1 CTN with a 5 Ω (±0.1%, 3 W) shunt across CO1-C02 terminals of the SEL-2664S
4000:1[a]	Use a 1000:1 CTN with 10 Ω and 5 Ω (±0.1%, 3 W) shunts in parallel across CO1-C02 terminals of the SEL-2664S
> 4000:1	Contact SEL for applications requiring a ratio greater than 4000:1

[a] Applies only to Amplifier Version 1.0 (original); the resistor must be located at the relay Terminals CO1-CO2.

The CTN sensors shown in *Table 2.2* are the only ones qualified for use with the SEL-2664S. This is due to the performance requirements at low frequencies and low currents used by the relay (see *Specifications*).

Note that the voltage developed across the NGR by the SEL-2664S injected current signal can be seen by all other devices connected across the NGR. The SEL-2664S injects a multisine current signal containing as many as four subharmonic frequencies. This signal can influence the measurements (e.g., fundamental or third-harmonic voltage) taken by an external device. Consider this when setting other devices. For more information, see *Neutral Overvoltage Element (59N1 and 59NRMS)* on page 4.7.

CTN Connection Guidelines

The guidelines for a CTN Secondary Connection are as follows:

- Use 2-conductor twisted-pair shielded cable (16–18 AWG/1.0–1.5 mm^2).
- Use a shielded cable with the shield grounded only at the relay end.
- Make sure the grounding of the CTN secondary lead is in accordance with the note associated with the ac connections diagram used (e.g., *Figure 2.13* through *Figure 2.19*).
- Avoid multiple grounds in the NGT secondary circuit because they can adversely affect the CTN secondary current.
- Limit the cable length to 330 feet (100 m).

Field Serviceability

⚠CAUTION
Equipment components are sensitive to electrostatic discharge (ESD). Undetectable permanent damage can result if you do not use proper ESD procedures. Ground yourself, your work surface, and this equipment before removing any cover from this equipment. If your facility is not equipped to work with these components, contact SEL about returning this device and related SEL equipment for service.

The SEL-2664S firmware can be upgraded in the field; refer to *Appendix B: Firmware Upgrade Instructions* for firmware upgrade instructions. You can detect when a self-test failure has occurred by configuring an output contact to create a diagnostic alarm as explained in *Section 4: Protection and Logic Functions*. By using the metering functions, you can find out if the analog front-end (not monitored by relay self-test) is functional. Refer to *Section 10: Testing and Troubleshooting* for detailed testing, field calibration procedure, and troubleshooting information.

The only component that can be replaced in the field is the real-time clock battery. A lithium battery powers the clock (date and time) if the external power source is lost or removed. The battery is a 3 V lithium coin cell, Rayovac® BR2335 or equivalent. At room temperature (25°C), the battery will operate

nominally for 10 years at rated load. When the relay is powered from an external source, the battery experiences a low self-discharge rate. Thus, battery life can extend well beyond 10 years. The battery cannot be recharged.

The SEL-2664S does not support fuse replacement in the field. Contact SEL about returning the device for service related to fuse replacement.

Real-Time Clock Battery Replacement

⚠CAUTION
There is danger of explosion if the battery is incorrectly replaced. Replace only with Rayovac® no. BR2335 or equivalent recommended by manufacturer. See Owner's Manual for safety instructions. The battery used in this device can present a fire or chemical burn hazard if mistreated. Do not recharge, disassemble, heat above 100°C or incinerate. Dispose of used batteries according to the manufacturer's instructions. Keep battery out of reach of children.

To replace the real-time clock battery, perform the following steps:

Step 1. Follow *Step 1* through *Step 4* in the *Password and SELBOOT Jumper Selection* to disconnect and open the relay.

Step 2. Locate the battery clip (holder) on the CPU/COMM board. Refer to *Figure 2.10*.

Step 3. Carefully remove the battery from beneath the clip.

Step 4. Properly dispose of the old battery.

Step 5. Install the new battery with the positive (+) side facing up.

Step 6. Follow *Step 7* through *Step 10* in the *Password and SELBOOT Jumper Selection* to put the relay back in service.

Step 7. Set the relay date and time.

SECTION 3

PC Software

Overview

SEL provides many PC software solutions (applications) to support the SEL-2664S and other SEL devices. *Table 3.1* lists the SEL-2664S software solutions.

Table 3.1 SEL Software Solutions

Part Number	Product Name	Description
SEL-5010	SEL-5010 Relay Assistant Software	Manages a connection directory and settings of multiple devices
SEL-5030	ACSELERATOR QuickSet® SEL-5030 Software	See *Table 3.2*
SEL-5032	ACSELERATOR Architect SEL-5032 Software	Configures IEC 61850 communications
SEL-5040	ACSELERATOR Report Server SEL-5040 Software	Automatically retrieves, files, and summarizes reports
SEL-5601-2	SYNCHROWAVE Event Software	Converts SEL Compressed ASCII event report files to oscillography
SEL-5801	SEL-5801 Cable Selector Software	Selects the proper SEL cables for your application

This section describes how to get started with the SEL-2664S and ACSELERATOR QuickSet® SEL-5030 Software. QuickSet is a powerful setting, event analysis, and measurement tool that aids in setting, applying, and using the SEL-2664S. *Table 3.2* shows the suite of QuickSet applications provided for the SEL-2664S.

Table 3.2 QuickSet Applications

Application	Description
Rules Based Settings Editor	Provides on-line or off-line device settings that include interdependency checks. Use this feature to create and manage settings for multiple devices in a database.
HMI	Provides a summary view of device operation. Use this feature to simplify commissioning testing.
Design Templates[a]	Allows you to customize relay settings to particular applications and store those settings in Design Templates. You can lock settings to match your standards or lock and hide settings that are not used.
Event Analysis	Provides oscillography and other event analysis tools.
Setting Database Management	QuickSet uses a database to manage the settings of multiple devices.
Terminal	Provides a direct connection to the SEL device. Use this feature to ensure proper communication and to directly interface with the device.
Help	Provides general QuickSet and device-specific QuickSet context.

[a] Available only in licensed versions of QuickSet.

QuickSet Setup

Follow the steps outlined in *Section 2: Installation* to prepare the SEL-2664S for use. Perform the following steps to initiate communication:

Step 1. Connect the appropriate communications cable between the SEL-2664S and the PC.

Step 2. Apply power to the SEL-2664S.

Step 3. Start QuickSet.

Communications

QuickSet uses relay communications **Port 1** through **Port 3**, or **Port F** (front panel) to communicate with the SEL-2664S. Perform the following steps to configure QuickSet to communicate effectively with the relay.

Step 1. Select **Communications** from the QuickSet main menu bar, as shown in *Figure 3.1*.

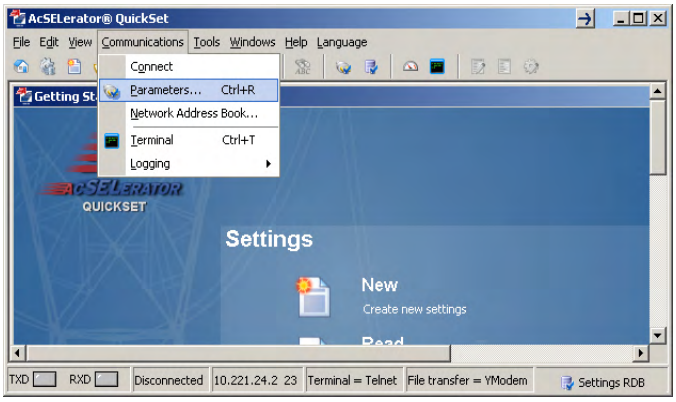

Figure 3.1 Serial Port Communications Dialog Box

Step 2. Select the **Parameters** submenu to display the screen shown in *Figure 3.2*.

Step 3. Configure the PC port to match the relay communications settings.

Step 4. Configure QuickSet to match the SEL-2664S default settings by entering Access Level 1 and Access Level 2 passwords in the respective text boxes.

Step 5. For network communications, select **Network** from the Active Connection Type drop-down menu and enter the network parameters as shown in *Figure 3.3*.

Step 6. For the SEL-2664S, always select FTP as the File Transfer Option.

Step 7. Exit the menus by selecting **OK** when finished.

NOTE: Factory-default passwords for Access Levels 1 and 2 are OTTER and TAIL, respectively.

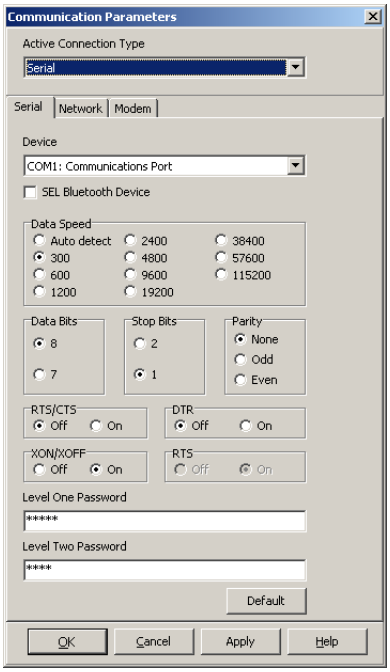

Figure 3.2 Serial Port Communications Parameters Dialog Box

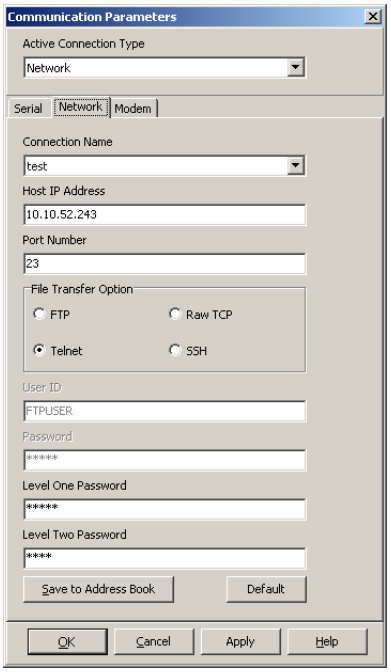

Figure 3.3 Network Communications Parameters Dialog Box

Terminal

Terminal Window

Select **Communications > Terminal** on the QuickSet main menu bar to open the terminal window (see *Figure 3.4*).

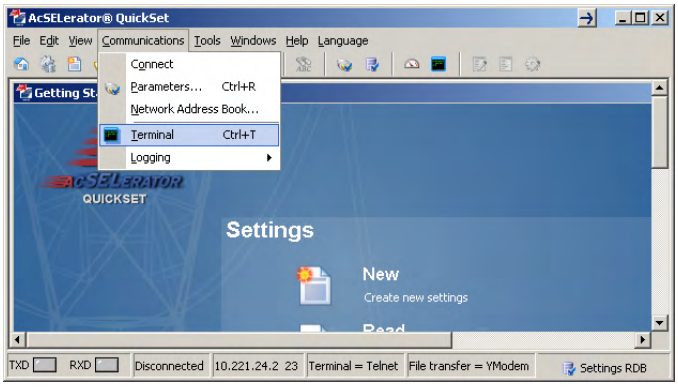

Figure 3.4 Communications Menu

The terminal window is an ASCII interface with the relay. This is a basic terminal emulation. Many third-party terminal emulation programs are available with file transfer encoding schemes. Open the terminal window by either selecting **Communications > Terminal** or by pressing **<Ctrl+T>**. Verify proper communication with the relay by opening a terminal window, pressing **<Enter>** a few times, and verifying that a prompt is received. If a prompt is not received, verify proper setup.

Terminal Logging

To create a file that contains all terminal communication with the relay, select **Terminal Logging** in the **Communications > Logging** menu, and specify a file at the prompt. QuickSet records communications events and errors in this file. Select **Communications > Logging > Connection Log** to view the log. Clear the log by selecting **Communications > Logging > Clear Connection Log**.

Drivers and Part Number

After selecting **Communications > Terminal**, access the relay at Access Level 1. Issue the **ID** command to receive an identification report, as shown in *Figure 3.5*.

```
=>>ID <Enter>
"FID=SEL-2664S-X283-V0-Z003002-D20220328","093B"
"BFID=BOOTLDR-R501-V0-Z000000-D20140224","0947"
"CID=4243","024A"
"DEVID=SEL-2664S","044F"
"DEVCODE=81","0310"
"PARTNO=2664S01XX83","0522"
"CONFIG=10000000","03E4"
"SPECIAL=010","033F"
"iedName =","0380"
"type =","028F"
"configVersion =","0629"
=>>
```

Figure 3.5 Device Response to the ID Command

Locate and record the Z number (Z001001) in the FID string. The first portion of the Z number (Z001…) determines the QuickSet relay settings driver version when you are creating or editing relay settings files. The use of the Device Editor driver version is discussed in more detail later in this section—see *Enter (or View) Settings* on page 3.8. Compare the part number (`PARTNO=2664S01XX83`) with the Model Option Table (MOT) to ensure the correct relay configuration.

Settings Database Management and Drivers

QuickSet uses a database to save relay settings. QuickSet contains sets of all settings files for each relay specified in the Database Manager. Choose appropriate storage backup methods and a secure location for storing database files.

Database Manager

Select **File > Database Manager** on the main menu bar to create new databases and manage records within existing databases.

Settings Database

Step 1. Open the Database Manager to access the database. Select **File > Database Manager**. A dialog box appears.

The default database file already configured in QuickSet is Relay.rdb. This database contains example settings files for the SEL products that use QuickSet.

Step 2. Enter descriptions for the database and for each relay or relay in the database in the **Database Description** and **Settings Description** dialog boxes.

Step 3. Enter special operating characteristics that describe the relay settings in the **Settings Description** dialog box. These can include the protection scheme settings and communications settings.

Step 4. Highlight one of the relays listed in **Settings** and select the **Copy** option button to create a new collection of settings. QuickSet prompts for a new name. Be sure to enter a new description in **Settings Description**.

Copy/Move Settings Between Databases

Step 1. Select the **Copy/Move Settings Between Settings Databases** tab to create multiple databases with the **Database Manager.** These databases are useful for grouping similar protection schemes or geographic areas.

Step 2. Select the ... button to open a relay database.

Step 3. Select a filename and select **Open**.

a. Highlight a settings file in **Settings Database A**.

b. Select **Copy** or **Move**, and select the **>** button to copy or move the settings to **Settings Database B**.

Step 4. Reverse this process to transfer settings from **Settings Database B** to **Settings Database A**. **Copy** creates an identical settings file that appears in both databases. **Move** removes the settings file from one database and places the file in another database.

Create a New Database, Copy an Existing Database

To create and copy an existing database of devices to a new database:

Step 1. Select **File > Database Manager**, and then click **New**. QuickSet prompts you for a file name.

Step 2. Type the new database name (and location if the new location differs from the existing one), and select **Save**. QuickSet displays the message `Settings [path and filename] was successfully created`.

Step 3. Select **OK**.

To copy an existing database of devices to a new database:

Step 1. Select **File > Database Manager**, and select the **Copy/Move Settings Between Settings Databases** tab from the **Database Manager** dialog box.

QuickSet opens the last active database and assigns it as **Settings Database A**.

Step 2. Select the **Settings Database B** ... button; QuickSet prompts you for a file location.

Step 3. Select a database name and select the **Open** button.

Settings

With QuickSet, you can create settings for one or more SEL-2664S relays. Store existing relay settings downloaded from SEL relays with QuickSet by creating a library of relay settings, then modifying and uploading these settings from the settings library to an SEL-2664S. QuickSet makes setting the relay easy and efficient. However, you do not have to use QuickSet to configure the SEL-2664S; you can use an ASCII terminal or a computer running terminal emulation software. QuickSet provides the advantages of rules-based settings checks, SELOGIC® control equation Expression Builder, operator control and metering HMI, event analysis, and help.

Settings Editor

The **Settings Editor** shows the relay settings in easy-to-understand categories. The SEL-2664S settings structure makes setting the relay easy and efficient. Settings are grouped logically, and relay elements that are not used in the selected protection scheme are not accessible. QuickSet shows all of the settings categories in the settings tree view. The settings tree view remains constant whether settings categories are enabled or disabled. However, any disabled settings are dimmed when accessed by selecting an item in the tree view.

Settings Menu

QuickSet uses a database to store and manage SEL relay settings. Each unique relay has its own record of settings. Use the **File** menu to **Open** an existing record, create and open a **New** record, or **Read** relay settings from a connected SEL-2664S. Use **Tools** menu to **Convert** and open an existing record. The record will be opened in the **Settings Editor** as a **Setting Form** (template).

Table 3.3 File/Tools Menus

Menus	Description
<<, >>	Use these navigation menu buttons to move from one category to the next
File > New	Open a new record
File > Open	Open an existing record
File > Read	Read device settings and then create and open a new record
Tools > Settings > Convert	Convert and open an existing record

File > New

Selecting the **New** menu item creates new settings files. QuickSet makes the new settings files from the driver that you specify in the **Settings Editor Selection** dialog box. QuickSet uses the Z number in the FID string to create a particular version of settings. To get started making SEL-2664S settings with the **Settings Editor**, select **File > New** from the main menu bar, and SEL-2664S and **001** from the **Settings Editor Selection** window as shown in *Figure 3.6*.

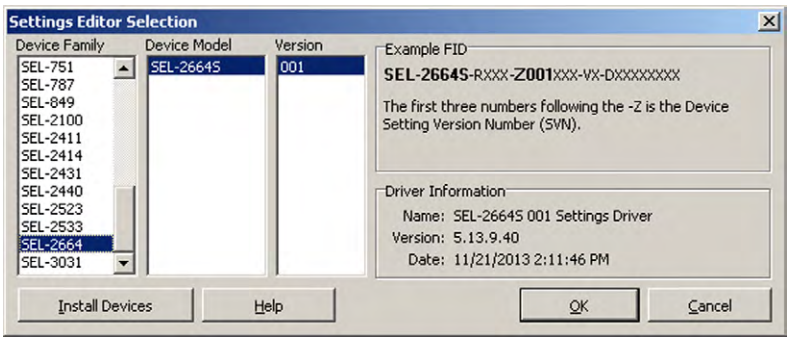

Figure 3.6 Selection of Drivers

Figure 3.7 shows the **Settings Editor** screen. View the bottom of the Settings Editor window to check the **Settings Driver** number. Compare the QuickSet Settings Driver number and the first portion of the Z-number in the FID string (select **Tools > HMI > HMI > Status**). These numbers must match. QuickSet uses this first portion of the Z-number to determine the correct **Settings Editor** to display.

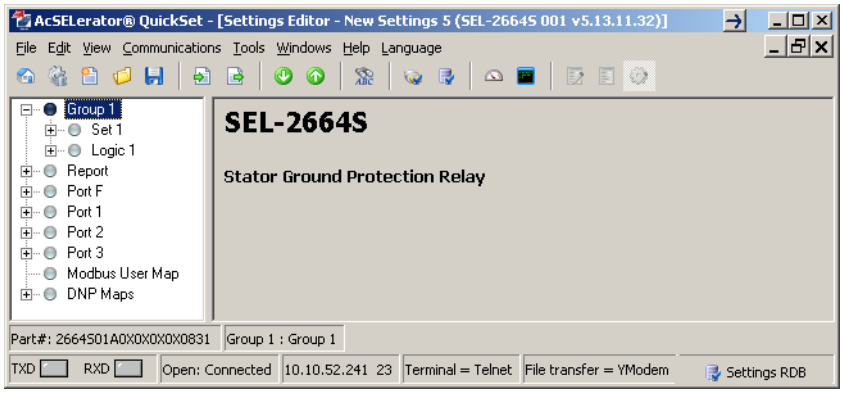

Figure 3.7 New Setting Screen

File > Open

The **Open** menu item opens an existing device from the active database folder. QuickSet prompts for a device to load into the **Settings Editor**.

File > Read

When the **Read** menu item is selected, QuickSet reads the device settings from a connected device. As QuickSet reads the device, a **Transfer Status** window appears. QuickSet uses serial protocols to read settings from SEL devices.

Tools > Settings > Convert

Use the **Convert** menu item to convert from one settings version to another. Typically, this utility is used to upgrade an existing settings file to a newer version because devices are using a newer version number. QuickSet provides a **Convert Settings** report that shows missed, changed, and invalid settings created as a result of the conversion or to enter settings. Review this report to determine whether changes are required.

Enter (or View) Settings

Use **View > Settings Editor** to enter or view settings. These features include the QuickSet settings driver version number (the first three digits of the Z number) in the title bar of the **Settings Editor**.

NOTE: Setting changes made during the edit session are not read by the relay unless they are transferred to the relay with a **Send** menu item.

Step 1. Select the **+** marks and the buttons in the **Settings Tree View** to expand and select the settings you want to change.

Step 2. Use **Tab** to navigate through the settings, or select a setting.

Step 3. To restore the previous value for a setting, right-click the mouse over the setting and select **Previous Value**.

Step 4. To restore the factory-default setting value, right-click in the setting dialog box and select **Default Value**.

Step 5. If you enter a setting that is out of range or has an error, QuickSet shows the error at the bottom of the **Settings Editor**. Double-click the error listing to go to the setting and enter valid input.

Expression Builder

NOTE: Be sure to enable the functions you need (Logic Settings > SELOGIC Enable) before using Expression Builder.

SELOGIC control equations are a powerful means for customizing device performance. QuickSet simplifies this process with the Expression Builder, a rules-based editor for programming SELOGIC control equations. The Expression Builder organizes device elements, analog quantities, and SELOGIC control equation variables.

Access the Expression Builder

Use the Ellipsis buttons ... in the Settings dialog boxes of **Settings Editor** windows to create expressions, as shown in *Figure 3.8*.

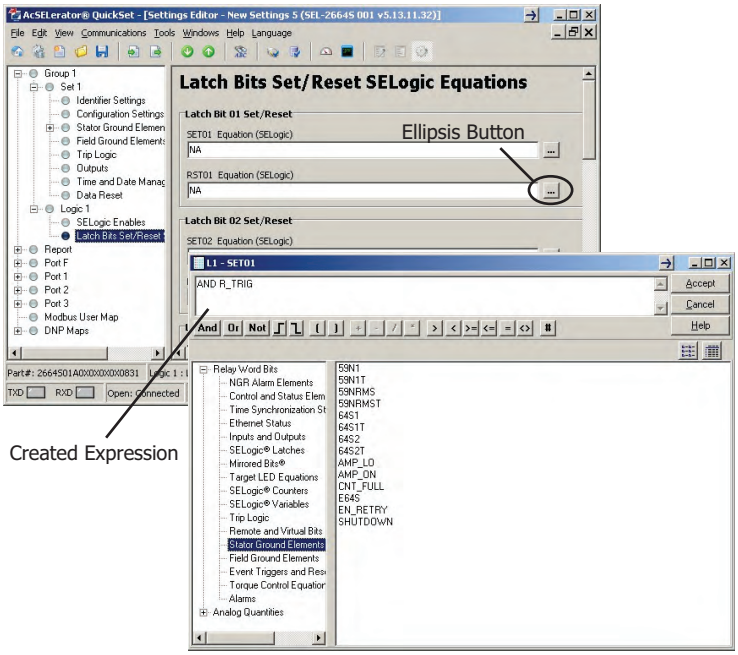

Figure 3.8 Expressions Created With Expression Builder

Expression Builder Organization

The **Expression Builder** dialog box is organized into two main parts representing the left side (LVALUE) and right side (RVALUE) of the SELOGIC control equation. The LVALUE is fixed for all settings.

Using the Expression Builder

Use the right side of the equation (RVALUE) to select broad categories of device elements, analog quantities, counters, timers, latches, and logic variables. Select a category in the RVALUE tree view, and the **Expression Builder** displays all operands for that category in the list box at the bottom right side. Directly underneath the right side of the equation, choose operators to include in the RVALUE. These operators include basic logic, rising- and falling-edge triggers, expression compares, and comments.

File > Save

Select the **Save** menu item from the **File** menu item of the **Settings Editor** once settings are entered into QuickSet to ensure that the settings are not lost.

File > Send

To transfer the edits made in the QuickSet edit session, you must send the settings to the relay. Select **Send** from the **File** menu. In the dialog box that opens, select the settings section you want transferred to the relay by checking the appropriate box.

Edit > Part Number

Use this menu item to change the part number if it was entered incorrectly during an earlier step.

Text Files

Select **Tools > Settings > Import** or **Tools > Settings > Export** on the QuickSet menu bar to import or export settings from or to a text file. Use this feature to create a small file that can be more easily stored or sent electronically.

Event Analysis

QuickSet has integrated analysis tools that help you retrieve information about relay operations quickly and easily. Use the event information that the SEL-2664S stores to evaluate the performance of a system (select **Tools > Events > Get Event Files**). *Figure 3.9* shows composite screens for retrieving events.

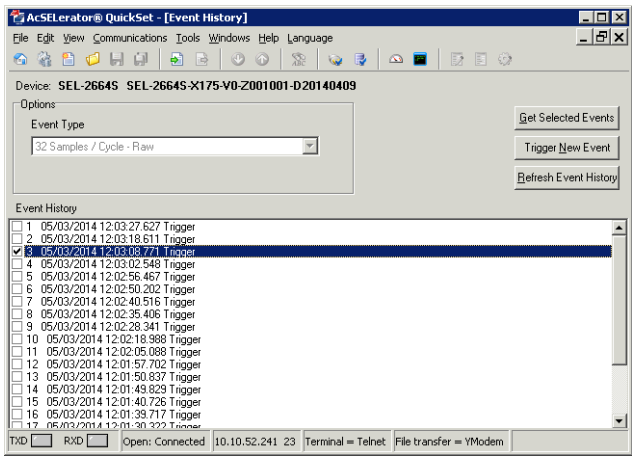

Figure 3.9 Composite Screens for Retrieving Events

View Event History

You can retrieve event files stored in the relay and transfer these files to a computer. For information on the types of event files and data capture, see *Section 9: Analyzing Events*. To download event files from the device, select **Tools > Events > Get Event Files**. The **Event History** dialog box appears, as shown in *Figure 3.9*. The SEL-2664S is capable of capturing 32 samples/cycle raw event data.

Get Event

Highlight the event you want to view (for example, Event 3 in *Figure 3.9*), and select the **Get Selected Event** button. QuickSet will prompt you to save the file on your computer, as shown in *Figure 3.10*.

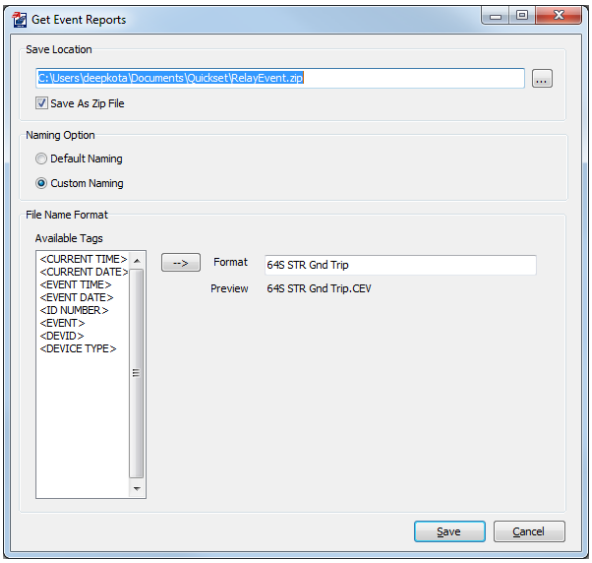

Figure 3.10 Saving the Retrieved Event

When saving an event report, select a save location and a file name for your report. Select either **Default Naming** or **Custom Naming**. Default naming has predefined tags and organization, which appear in the **Format** text box when default naming is selected. You can use custom naming to create file names specific to your application by selecting and organizing your own tags (listed in **Available Tags**).

View Event Files

To view the saved events, you need SYNCHROWAVE Event software. Use the **View Event Files** function from the **Tools > Events** menu to select the event you want to view (QuickSet remembers the location where you stored the previous event record). Use **View Combined Event Files** to simultaneously view as many as three separate events.

Meter and Control

Select **Tools** > **HMI** > **HMI** to bring up the screen shown in *Figure 3.11*. The HMI tree view shows all the functions available from the HMI function.

Device Overview

The device overview screen provides an overview of the device. The Contact I/O portion of the window displays the status of the two inputs and four outputs of the main board. You cannot change these assignments.

Figure 3.11 Device Overview Screen

The front-panel LEDs display the status of the eight front-panel LEDs. The front-panel LED assignments are fixed and cannot be changed. The **Fundamental, Math Variables, Profile Report**, etc., screens display the corresponding values.

Select the **Targets** button to view the status of all the Relay Word bits. When a Relay Word bit has a value of 1 (ENABLED = 1), the Relay Word bit is asserted. Similarly, when a Relay Word bit has a value of 0 (RB02 = 0), the Relay Word bit is deasserted.

The **Status** and **SER** screens display the same information as the ASCII **STA** and **SER** commands.

Figure 3.12 shows the control screen. From here you can reset metering data clear the Event History, SER, MIRRORED BITS report, LDP, or trigger events. You can also reset the targets, synchronize with IRIG, and set the time and date.

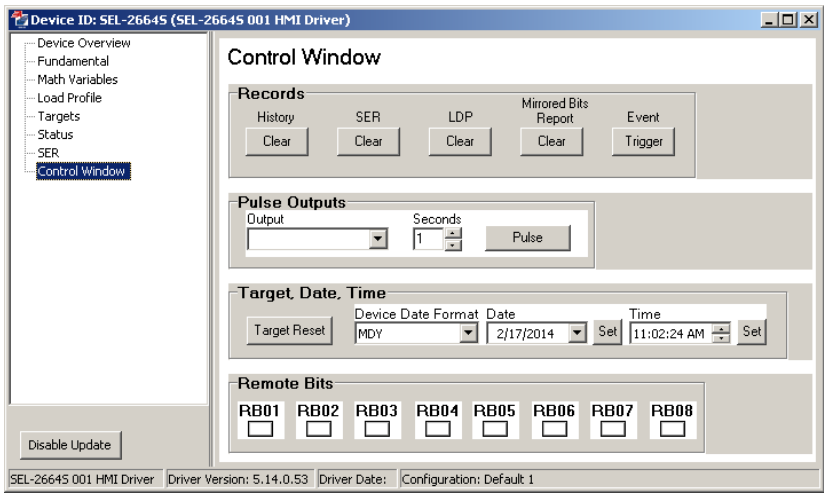

Figure 3.12 Control Screen

To control the Remote bits, select the appropriate square, then select the operation from the box shown in *Figure 3.13*.

Figure 3.13 Remote Operation Selection

QuickSet Help

Various forms of QuickSet help are available, as shown in *Table 3.4*. Press **<F1>** to open a context-sensitive help file with the appropriate topic as the default.

Table 3.4 QuickSet Help

Help	Description
General QuickSet	Select **Help** from the main menu bar
SEL-2664S Settings	Select **Settings Help** from the **Help** menu bar while the **Settings Editor** is open.
Database Manager	Select **Help** from the bottom of the **Database Manager** window

This page intentionally left blank

SECTION 4

Protection and Logic Functions

Overview

NOTE: Factory-default settings for the SEL-2664S are not selected for any particular application. You must compute, document, and send the appropriate settings to the relay for your application.

This section describes the SEL-2664S settings, including the protection elements, basic functions, control I/O logic, and communications ports.

Factory-default settings for the SEL-2664S are not selected for any particular application. You must compute, document, and send the appropriate settings to the relay for your application.

This section includes the following subsections:

Application Data. Lists information that you need to know about the protected generator before calculating the relay settings.

Group Settings (SET Command). Lists and describes the settings that configure the relay inputs to accurately measure and interpret the ac current and voltage input signals.

Logic Settings (SET L Command). Lists and describes the settings associated with latches, timers, and output contacts.

Port Settings (SET P Command). Lists and describes the settings that configure the relay front- and rear-panel ports.

Report Settings (SET R Command). Lists and describes the settings for the sequential event reports, event, and profile reports.

DNP Map Settings (Set DNP n Command, n = 1, 2, or 3). Shows DNP user map register settings.

Modbus Map Settings (SET M Command). Shows Modbus® user map register settings.

Application Data

Collect the following generator system and protection data. Refer to *Application Considerations* on page 2.15 for additional details.

- System nominal frequency (FNOM)
- Nominal phase-to-phase voltage, kV (VNOM)
- NGR location (NGR_LOC), secondary/primary
- Nominal NGR value (NGR_VAL)
- NGT ratio (NGT_RAT)
  (ratio of the primary/secondary voltage used)
- Fundamental neutral overvoltage element pickup (e.g., 64G1P) (this is typically 5 percent–10 percent of VN_{base} [see *Equation 4.4*])
- Single or redundant SEL-2664S relay scheme

Element 64S Setting Guideline

Follow this guideline after collecting the *Application Data* listed previously. The guidelines are intended to aid in determining the setting NGR_TAP, CTN_RAT, CTN_LOC, and I_SRC for single, neutral grounded generators with one or two (redundant) SEL-2664S relays using Amplifier Version 2.0. Other settings and applications are covered separately in this manual.

Basic Calculations

If NGR_LOC = SEC, skip *Equation 4.1–Equation 4.3* and start by calculating the neutral voltage base using *Equation 4.4*.

Minimum NGT ratio (calculate and enter the resulting value if NGR_LOC = PRIM and one relay is injecting through the grounding transformer):

$$\begin{aligned} NGT_RAT_{min} &= \frac{VNOM \bullet 1000}{\sqrt{3} \bullet 245} \\ &= _____ \end{aligned}$$

Equation 4.1

Minimum NGT ratio (calculate and enter the resulting value if NGR_LOC = PRIM and two relays are injecting through the same grounding transformer):

$$\begin{aligned} NGT_RAT_{min} &= \frac{VNOM \bullet 1000}{\sqrt{3} \bullet 225} \\ &= _____ \end{aligned}$$

Equation 4.2

Maximum NGT ratio (calculate and enter the resulting value if NGR_LOC = PRIM; this is applicable to single and redundant relay applications):

$$\begin{aligned} NGT_RAT_{max} &= MIN(\sqrt{\frac{NGR_VAL}{0.1}}, 100) \\ &= _____ \end{aligned}$$

Equation 4.3

Neutral voltage base:

$$\begin{aligned} VN_{base} &= \frac{VNOM \bullet 1000}{\sqrt{3} \bullet NGT_RAT} \\ &= _____ \text{ V sec} \end{aligned}$$

Equation 4.4

NGR value on the secondary side (enter value if NGR_LOC = SEC):

$$\begin{aligned} NGR_{sec} &= NGR_VAL \\ &= _____ \text{ Ohm sec} \end{aligned}$$

Equation 4.5

NGR value on the secondary side of the NGT (calculate and enter resulting value if NGR_LOC = PRIM):

$$NGR_{sec} = \frac{NGR_VAL}{NGT_RAT^2}$$
$$= _____ \text{ Ohm sec}$$

Equation 4.6

Maximum fault current, fundamental frequency:

$$I_{f_sec} = \frac{VN_{base}}{NGR_{sec}}$$
$$= _____ \text{ A sec}$$

Equation 4.7

Maximum fault current, fundamental frequency:

$$I_{f_pri} = \frac{I_{f_sec}}{NGT_RAT}$$
$$= _____ \text{ A prim}$$

Equation 4.8

Recommendations for Optimum Performance

Contact SEL (2664S_Support@selinc.com) for technical assistance if any of the following items are true.

- $NGR_{sec} < 0.10\ \Omega$
- One-way injection circuit lead resistance (R_WIRE) > NGR_{sec} • NGR_TAP/100 (R_WIRE should include one half of the NGT winding resistance reflected to its secondary winding (R_NGT) if NGR_LOC = PRIM)
- One-way injection circuit lead resistance R_WIRE > 0.3 Ω (R_WIRE should include one half of the NGT winding resistance reflected to its secondary winding (R_NGT) if NGR_LOC = PRIM)
- NGR reflected on primary side is outside the range of 500–6000 Ω
- Wye-broken delta grounding applications
- Redundant relay applications

Setting Suggestions and Comments

Use the following to determine the settings indicated:

- If NGR_LOC = PRIM, the relay hides and sets NGR_TAP = 100.
- If NGR_LOC = SEC and $VN_{base} \leq 250$ V, set NGR_TAP = 100.

NOTE: NGR_TAP should also be calculated using *Equation 4.9* if 64G1P is set to greater than 0.05 • VN_{base} (i. e., covering less than 95 percent of the stator winding).

➤ If NGR_LOC = SEC and VN_{base} > 250 V, calculate:

$$NGR_TAP = \frac{70 - 2.25 \bullet NGR_VAL \bullet A}{1.71 \bullet (64G1P + 0.1 \bullet VN_{base})} \bullet 95\%$$

Equation 4.9

where:

A = 1.0 for one relay injecting
1.5 for two relays injecting

You can set NGR_TAP to the closest available TAP lower than the calculated TAP as long as (NGR_TAP • NGR_VAL ≥ 0.1 Ω).

➤ If I_{f_sec} < 285 A and NGR_LOC = SEC, use 1000:1 CTN on the secondary side of the NGT and set CTN_RAT = 1000 and CTN_LOC = SEC.

➤ If (NGR_LOC = PRIM or I_{f_sec} ≥ 285 A) and I_{f_pri} < 24 A, use 500:1 CTN on the primary side of the NGT and set CTN_RAT = 500 and CTN_LOC = PRIM.

➤ If I_{f_pri} ≥ 24 A, use 1000:1 CTN on the primary side of the NGT and set CTN_RAT = 1000, CTN_LOC = PRIM, and I_SRC = 4.5 A.

➤ If the NGR is located on the primary side (NGR_LOC = PRIM), verify that the NGT ratio used is within the minimum and maximum calculated earlier and is rated 5 kVA or higher (see *Equation 4.1–Equation 4.3*). Contact SEL for assistance if it is outside the range.

➤ Calculate the injection source current (setting I_SRC) using *Table 4.1*.

Table 4.1 Guidelines for Setting I_SRC

Setting NGT_RAT	Setting I_SRC	Remarks
<50.00	3.0	Except when 1000:1 CTN is used on the PRIM side
50.00–80.00	0.05 (NGT_RAT–50) + 3	Except when 1000:1 CTN is used on the PRIM side
>80.00	4.5	Except when 1000:1 CTN is used on the PRIM side
1.00–300.00	4.5	When CTN_RAT = 1000 and CTN_LOC = PRIM

➤ If NGR_{sec} > 1.0, perform the following check (where A = 1.0 for one relay injecting and 1.5 for two relays injecting and I_SRC_{TABLE} is I_SRC as read from *Table 4.1*):

$$I_SRC = MIN[\left(\frac{21000}{A \bullet NGR_{sec} \bullet NGR_TAP \bullet NGR_RAT}\right), I_SRC_{TABLE}]$$

Group Settings (SET Command)

ID Settings

The SEL-2664S has the identifier settings described in *Table 4.2*. The SEL-2664S prints the Relay and Terminal Identifier strings at the top of the responses to serial port commands to identify messages from individual relays.

Enter as many as 16 characters, including letters A–Z (not case sensitive), numbers 0–9, periods (.), dashes (-), and spaces. Suggested identifiers include the location, process, circuit, size, or equipment number of the protected generator. The lowercase values are accepted, but they are forced to uppercase.

Table 4.2 Identifier Settings

Setting Prompt	Setting Range	Setting Name := Factory Default
UNIT ID LINE 1	16 Characters	RID := SEL-2664S
UNIT ID LINE 2	16 Characters	TID := STATOR GND RELAY

Configuration Settings

NOTE: When you control the Injection Mode with P_LOGIC, the measurement accuracy (including insulation resistance) may be compromised for approximately 20 cycles during Mode transitions. Make sure the 64S delays (settings 64S1D and 64S2D) are set greater than 0.5 second to avoid a false alarm and trip.

The Rated Frequency setting FNOM configures the relay to accurately sample the voltage and current signals. For a 50 Hz system, the relay samples 1600 times a second. For a 60 Hz system, the relay samples 1920 times a second.

The Injection Source Mode setting MODE_SRC decides the injected signal contents. If MODE_SRC := NORM, then the relay injects all four frequency components. The SEL-2664S performs real-time compensation of changes in the injection circuit lead resistance. Such changes are typically caused by ambient temperature excursions, test switch operations, etc. The compensation is limited to ±40 percent of the lead resistance measured during field calibration, and is available when MODE_SRC=NORM or when both Relay Word bits P_LOGIC1 and P_LOGIC2 are asserted in P_LOGIC mode (e.g., see *Table 4.3*).

For redundant protection, the SEL-2664S allows MODE_SRC to be set to P1, P2, or P_LOGIC. For a 50 Hz system, the P1 mode injects sinusoidal signals at 15 and 30 Hz, while the P2 mode injects sinusoidal signals at 20 and 40 Hz. For a 60 Hz system, the P1 mode injects sinusoidal signals at 18 and 36 Hz, while the P2 mode injects sinusoidal signals at 24 and 48 Hz. You can set MODE_SRC := P_LOGIC to dynamically adapt the Mode based on SELOGIC settings P_LOGIC1 and P_LOGIC2. See *Table 4.3* for the Injection Modes when controlled by the P_LOGIC.

NOTE: The P_LOGIC mode is intended for redundant relay schemes with the NGR on the secondary side of the NGT (see *Figure 2.17*). The relay measures/reports the insulation resistance and capacitance. The insulation resistance and capacitance include the frequencies injected by the redundant relay. Do not use the P_LOGIC mode if the NGR is located on the primary side.

Table 4.3 Injection Frequencies When MODE_SRC = P_LOGIC

P_LOGIC2	P_LOGIC1	Injection Mode	Remark
0	0	OFF	No injection
0	1	P1	Injects F1 and F3
1	0	P2	Injects F2 and F4
1	1	NORM	Injects F1–F4

By setting up two relays like this, in case one relay fails to inject, the other relay can still effectively protect the generator using two or four frequency injection. For technical assistance in applying a redundant relays scheme, contact SEL at 2664S_Support@selinc.com.

NOTE: In wye-broken delta grounding applications, use NGT_RAT = (actual NGT ratio)/3.

The Neutral Ground Transformer Ratio setting NGT_RAT configures the relay to accurately scale measured values. Set it based on your configuration. The SEL-2664S uses setting NGT_RAT to convert measured insulation resistance to the primary side. Any error in the ratio is magnified by a square of the error in the conversion. Use the actual NGT ratio used for the setting (e.g., take into account the primary winding tap used).

The Neutral Ground Resistor Location setting NGR_LOC defines the location of the grounding resistance. The grounding resistance can either be on the primary side or the secondary side of the neutral grounding transformer. Choose this setting based on your specific system configuration.

Set the Neutral Ground Resistor Value (NGR_VAL) to its nominal value, which should be measured with a Digital Low-Resistance Ohmmeter. Normally, the relay measures and uses the actual NGR value; however, the nominal value is used when the actual value cannot be accurately measured for any reason, including upon relay power up until the value can be measured (about one second). See *Setting Suggestions and Comments* on page 4.3 for details on the NGR_TAP, CTN_RAT, and I_SRC settings. *Figure 4.1* shows basic ac connections using the NGR Tap. Use of NGR Tap does not affect the NGT Ratio setting.

NOTE: The SEL-2664S measures the Tap % as the NGR and considers the remaining (100 − TAP) % as a part of NGT secondary winding resistance. However, the meter report always displays the full-scale NGR value irrespective of the Tap setting.

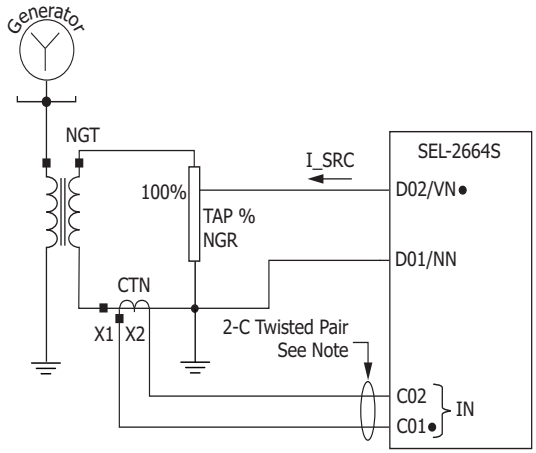

Note: Terminal C02 should be grounded if the relay with Amplifier Version 2.0 is used. Do not ground the CTN leads if Amplifier Version 1.0 (original) is used; the C02 is internally grounded in Amplifier Version 1.0.

Figure 4.1 Basic AC Connections Using the NGR Tap

The Neutral CBCT Location setting CTN_LOC defines the location of the neutral CBCT. Set CTN_LOC to PRIM if the CBCT is on the primary side of the neutral grounding transformer. Set CTN_LOC to SEC if the CBCT is on the secondary side of the neutral grounding transformer. If the neutral grounding resistor is located on the primary side, note that the neutral CBCT also must be located on the primary side.

The Neutral CBCT Ratio setting CTN_RAT configures the relay to accurately scale measured current. Refer to *Methods to Create the Desired Effective CTN Ratio* on page 2.16 for methods to achieve the desired effective ratio for Version 1 hardware.

NOTE: Field calibration is required for all applications. Refer to *Field Calibration Process* in *Section 10: Testing and Troubleshooting*. The field calibration procedure must be repeated if any changes are made to the application including CBCT location, NGR location, NGR_TAP setting, NGR ratings, and any changes in the cabling.

The Date Format setting DATE_F allows you to change the relay date representation to the North American standard (Month/Day/Year), the engineering standard (Year/Month/Day), or the European standard (Day/Month/Year).

Table 4.4 Configuration Settings (Sheet 1 of 2)

Setting Prompt	Setting Range	Setting Name := Factory Default
Rated Frequency	50, 60 Hz	FNOM := 60
Injection Source Current	0.5–5.0 A	I_SRC := 2.5
Injection Source Mode	NORM, P1, P2, P_LOGIC	MODE_SRC := NORM

Table 4.4 Configuration Settings (Sheet 2 of 2)

Setting Prompt	Setting Range	Setting Name := Factory Default
Neutral Ground Xfmr Ratio	1.00–300.00	NGT_RAT := 120.00
Neutral Ground Resistor Location	SEC, PRIM	NGR_LOC := SEC
NGR Signal Injection Tap	10.0%–100.0%[a]	NGR_TAP := 100.0
Neutral Ground Resistor Value	0.100–4000 Ohm	NGR_VAL := 1.000
Neutral CT Location	SEC, PRIM (if NGR_LOC := SEC)[b]	CTN_LOC := SEC
Neutral CT Ratio	10.0–5000.0	CTN_RAT := 1000.0
Date Format	MDY, YMD, DMY	DATE_F := MDY

[a] NGR_TAP is forced to 100% and hidden if NGR_LOC = PRIM.
[b] CTN_LOC is forced to PRIM and hidden if NGR_LOC = PRIM

Protection Elements

Neutral Overvoltage Element (59N1 and 59NRMS)

NOTE: The SEL-2664S uses the nominal frequency (setting FNOM) for the fundamental frequency when measuring the voltage.

The SEL-2664S has two functions that work in parallel to provide 100 percent stator ground protection: the neutral overvoltage function and the multisine signal injection-based stator ground protection function. The neutral voltage may include fundamental frequencies, third-harmonic frequencies, and the frequencies injected by the SEL-2664S. The SEL-2664S provides two neutral overvoltage elements: 59N1 and 59NRMS. The 59N1 element responds to the fundamental frequency magnitude, while the 59NRMS element responds to rms magnitude, which includes fundamental and non-fundamental components.

The entire injected voltage adds to the 59NRMS signal, whereas a smaller portion adds to the 59N1 signal. As a result, the 59NRMS element must be set less sensitively than the 59N1 element, as described later. However, at off-nominal frequency operations, the 59NRMS element will maintain its sensitivity and the 59N1 element will tend to desensitize.

The 59N1 and 59NRMS elements detect stator ground faults in all but the bottom 5–10 percent of the generator winding. In this area close to the generator neutral, the neutral voltage does not increase significantly during a generator ground fault. The SEL-2664S uses the 64S stator insulation resistance measurement method to detect faults in this area. *Figure 4.2* shows the typical coordination between the 59N and 64S elements.

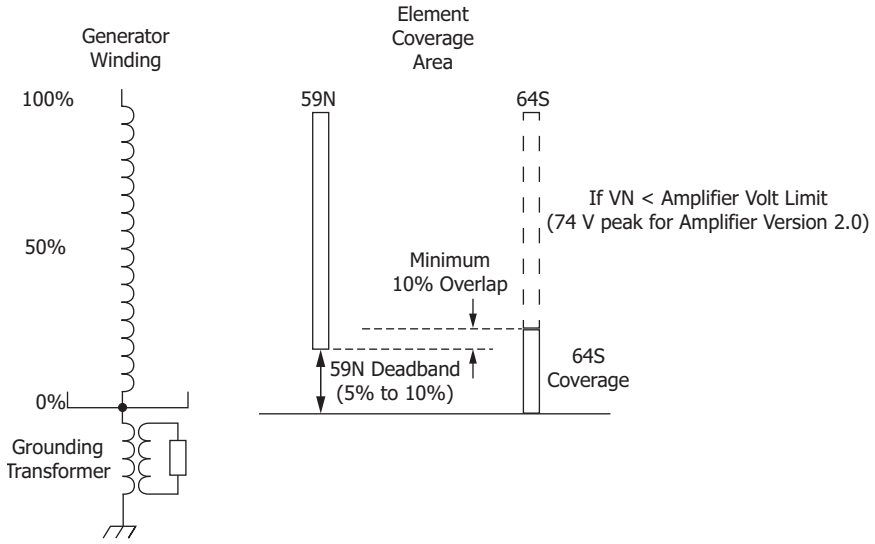

Figure 4.2 59N and 64S Element Operating Characteristics

Figure 4.3 illustrates the logic of the two 59N elements, one each based on filtered and calculated rms of VN.

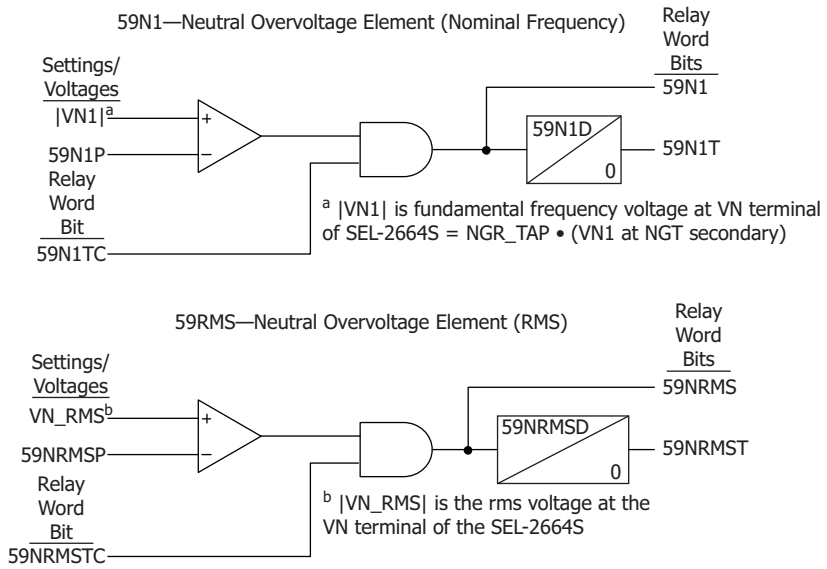

Figure 4.3 59N Elements Logic Diagram

The 59N1P setting defines the sensitivity of the relay fundamental frequency neutral overvoltage element used to detect stator ground faults in the middle and upper areas of the generator winding. The 59N1D setting defines the fundamental frequency neutral overvoltage element time delay. The 59N1TC torque control setting disables the 59N1 element when its result is logical 0 and enables the 59N1 element when its result is logical 1. The 59N1 element settings should account for the following external events:

- A ground fault on the high-voltage side of the generator step-up (GSU) can result in an increase in the generator neutral voltage due to coupling through the capacitance between the high-voltage and low-voltage windings.

➤ Depending on the VT connections, a ground fault on the VT secondary wiring can also result in an increase in the generator neutral voltage until the fault is cleared by the VT fuses.

The 59NRMSP setting defines the sensitivity of the relay rms neutral overvoltage element used to detect stator ground faults in the middle and upper areas of the generator winding. The 59NRMSD setting defines the neutral rms overvoltage element time delay. The 59NRMSTC torque control setting disables the 59NRMS element when its result is logical 0 and enables the 59NRMS element when its result is logical 1.

The multisine current signal (I_SRC) injected by the SEL-2664S relay will cause a voltage across VN terminals of the relay. This voltage will be seen by the 59N1 and 59NRMS elements as well as other devices measuring the same voltage, e. g., 64G elements of the SEL-700G and SEL-300G relays (see *Figure 2.14*) and redundant SEL-2664S relays (see *Figure 2.17*).

While the injected current signal is composed of subharmonic frequencies, a portion of the injected signal will be seen by the 59N1 element. The measured voltage magnitude will oscillate around the actual fundamental voltage magnitude.

An approximation of the maximum deviation of the measured voltage magnitude is given by *Equation 4.10* for NGR_LOC = SEC applications and by *Equation 4.11* for NGR_LOC = PRIM applications.

$$V_SRC_{NGR_{SEC}} = I_SRC \bullet \left(k1 \bullet 2 \bullet R_WIRE + k2 \bullet NGR_VAL \bullet \frac{NGR_TAP}{100}\right)$$

Equation 4.10

$$V_SRC_{NGR_PRI} = I_SRC \bullet \left(k1 \bullet 2 \bullet (R_WIRE - R_NGT) + k2 \bullet \left(Z_{NGT} + \frac{NGR_VAL}{NGT_RAT^2}\right)\right)$$

Equation 4.11

Z_{NGT} is the NGT impedance reflected to the secondary side, R_NGT is the $Re(Z_{NGT})$, and the k1 and k2 values for each combination are given in *Table 4.5*.

Table 4.5 k Factors for *Equation 4.10* and *Equation 4.11*

SEL-2664S Relays Injecting	Field Applied from Standstill	64G1 in SEL-300G, SEL-700G, and SEL-400G		59N1 in SEL-2664S	
		k1	k2	k1	k2
One relay injecting	No	0	0.86	0.86	0.86
	Yes	0	1.43	0.86[a]	0.86[a]
Two relays injecting	No	0	1.54	0.88	1.54
	Yes	0	1.79	0.88[a]	1.54[a]

[a] The 59N1 function should be blocked when starting with the field applied from standstill. Enable the 59NRMS element to provide protection during the start.

The maximum and minimum filtered neutral voltage magnitude measured by the overvoltage element for a fundamental neutral voltage generated by the machine of VN_{FNOM} is given by *Equation 4.12* and *Equation 4.13*.

$$VN_{MAX} = VN_{FNOM} + V_SRC$$

Equation 4.12

$$VN_{MAX} = VN_{FNOM} - V_SRC$$

Equation 4.13

where V_SRC is the result of either *Equation 4.10* or *Equation 4.11*.

To ensure adequate neutral overvoltage protection during off-nominal frequency excursions of the machine implement this function in the main generator relay and/or enable 59N1 and 59NRMS in the SEL-2664S with 59NRMSP setting derived using *Equation 4.14*.

$$59NRMSP = 1.15 \bullet \sqrt{A^2 + D \bullet B^2 + C^2}$$

Equation 4.14

$$A = I_SRC \bullet \left(2 \bullet R_WIRE + NGR_{SEC} \bullet \frac{NGR_TAP}{100}\right)$$

$$B = I_SRC \bullet NGR_{SEC} \bullet \frac{NGR_TAP}{100}$$

$$C = 1.1 \bullet MAX(0.09 \bullet VN_{BASE}, VN3_MAG_{MAX}) \bullet \frac{NGR_TAP}{100}$$

$$D = 1 \text{ for two relays injecting or 0 for one relay injecting}$$

($VN3_MAG_{MAX}$ is the maximum third-harmonic voltage measured across the NGT secondary winding. To find this value, record the value of VN3 from the MET command or include VN3_MAG in the PROFLIST setting across the entire loading range of the generator).

When the 64S element is used, the third-harmonic voltage differential element (e.g., 64G2 of the SEL-700G and SEL-300G relays) is not required. However, if used, the 64G2 element should be desensitized to maintain its security.

Table 4.6 Neutral Overvoltage Element Settings

Setting Prompt	Setting Range	Setting Name := Factory Default
59N1 Pickup	OFF, 2.5–150.0 V	59N1P := 10.0
59N1 Delay	0.1–400.0 s	59N1D := 1.0
59N1 Torque Control	SELOGIC	59N1TC := 1
59N RMS Pickup	OFF, 2.5–150.0 V	59NRMSP := 15.0
59N RMS Delay	0.1–400.0 s	59NRMSD := 1.0
59N RMS Torque Control	SELOGIC	59NRMSTC := 1

The SEL-2664S amplifier is shut off when the applied peak voltage (across terminals VN–NN) is over 74 V peak (or 26 V for Amplifier Version 1.0 [original]). For example, this can happen during single-phase-to-ground faults near a generator terminal. The current injection-based stator-to-ground fault detection function (64S) is unavailable under this condition. The 64S element automatically becomes available once the backfeed voltage subsides. However, during this time, 59N elements continue to protect 90–95 percent of the stator winding.

Note that it is possible for the VN terminal open condition (for example, a broken wire between terminals VN–NN and the neutral grounding resistor) to assert the 59N element if the 59N element pickup is set too low. When using the 59N element for tripping, use a pickup timer of at least 0.75 seconds. The settings can be more sensitive if the 59N is used for warning only.

Neutral Grounding Resistor (NGR) Monitor Function

This function monitors the neutral grounding resistor (NGR) of the generator. It operates when a short or open circuit of the NGR is detected. *Figure 4.4* illustrates the logic of this function.

NOTE: If NGR_TAP is set below 100 percent, the relay measures the resistance of a set percentage of the NGR and extrapolates that to 100 percent for various reports and monitoring. The unmeasured portion of the NGR (100−NGR_TAP %) is not monitored and any short or open in that portion may not be reflected in the measured values.

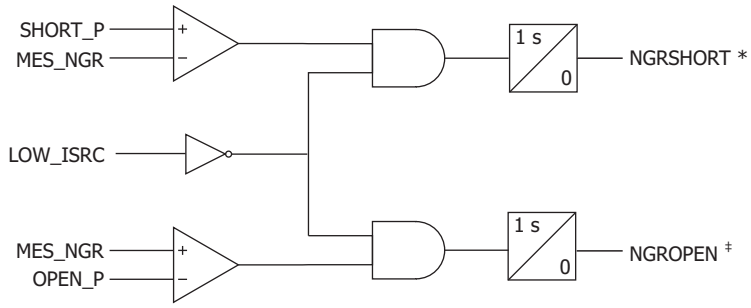

* Do not process NGRSHORT logic if SHORT_P := OFF
‡ Do not process NGROPEN logic if OPEN_P := OFF

Figure 4.4 NGR Monitor Function

SHORT_P is the NGR short pickup threshold. OPEN_P is the NGR open pickup threshold. Considering that the NGR_VAL value may deviate from the actual value and that the NGR value varies with temperature and time, use the following equation to calculate the recommended setting for SHORT_P and OPEN_P.

$$\text{SHORT_P} \leq 0.5 \bullet \text{NGR_VAL} - 0.01$$
$$\text{OPEN_P} \geq 1.5 \bullet \text{NGR_VAL} + 0.01$$

When insufficient currents are injected and the Relay Word bit LOW_ISRC is asserted, the relay does not have all the measurements necessary to calculate the NGR value. Therefore, this function is unavailable when LOW_ISRC is asserted.

Table 4.7 NGR Monitor Function Settings

Setting Prompt	Setting Range	Setting Name := Factory Default
NGR Short Pickup	OFF, 0.01–4000 Ohm	SHORT_P := OFF
NGR Open Pickup	OFF, 0.1–4000 Ohm	OPEN_P := OFF

Stator Ground Protection (64S)

NOTE: The 64S element provides stator ground protection if the neutral voltage input (VN) is under 74 V peak (or 26 V peak for Amplifier Version 1.0 [original]) during a fault. This means when the generator is not in service, the 64S element provides 100 percent stator ground protection. However, when the generator is in service the element is automatically disabled if the VN voltage exceeds 74 V peak or 26 V peak (faults well above the neutral). For 100 percent protection 100 percent of the time, it is very important to supplement the 64S by setting the 59N1 elements to cover over 90 percent of the stator windings.

The Neutral Overvoltage Element (59N) provides ground fault protection for 90 to 95 percent of the stator winding from generator terminals. For faults happening near the generator neutral, the 59N element is supplemented with the Stator Ground Protection Element (64S), the exceptional sensitivity of which provides reliable protection for 100 percent of the winding.

To provide 100 percent stator ground protection 100 percent of the time, the SEL-2664S injects and measures impedance at four different frequencies. By doing so, the SEL-2664S is able to measure stator ground impedance even when the generator is at a standstill or starting.

The SEL-2664S can be set up to accommodate various system configurations. Based on the specific system configuration, the 64S element calculates the insulation resistance and capacitance (in kΩ and uF, primary) and compares the insulation resistance to a setting configured by the user. *Figure 4.5* shows a high-level description of the 64S insulation resistance measurement algorithm.

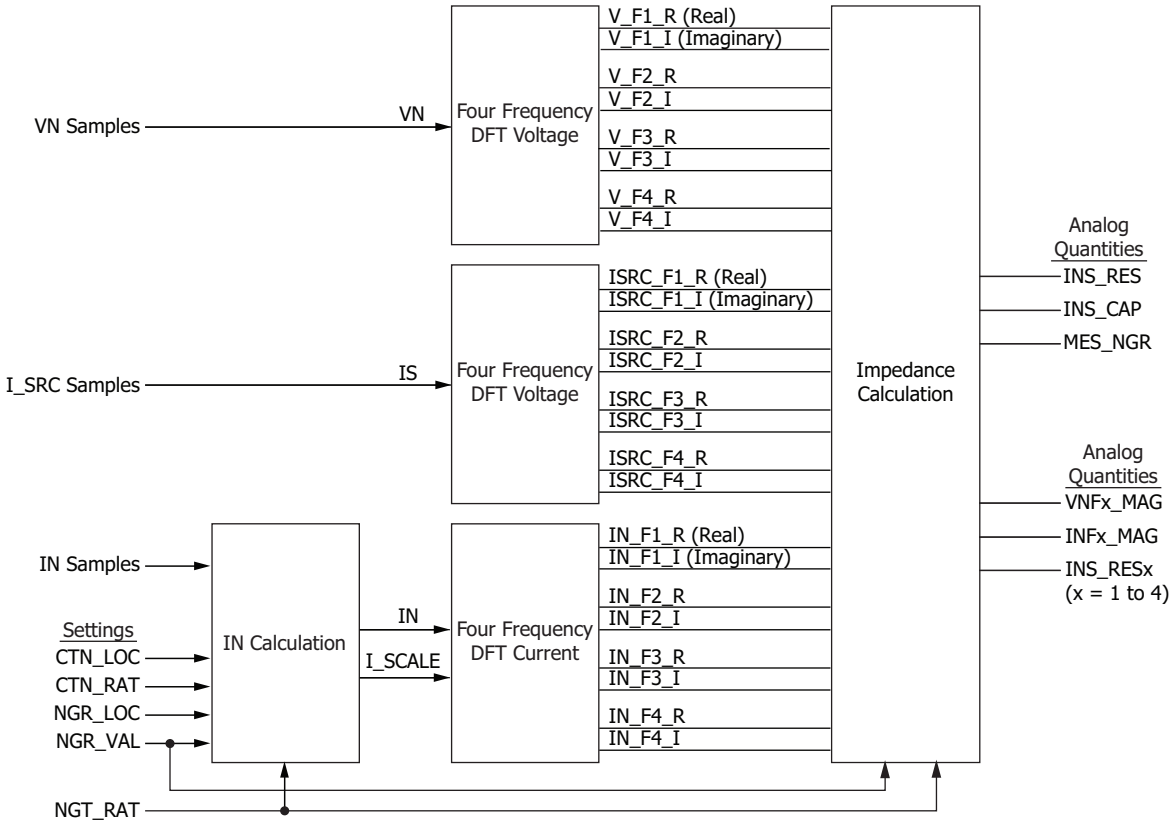

Figure 4.5 Insulation Resistance Measurement Subsystem Block Diagram

Each Discrete Fourier Transform (DFT) block in *Figure 4.5* is in charge of calculating the real and imaginary parts of the single input variable (IS, IN, VN). The DFT calculation extracts four frequency components, performing in effect four independent impedance measurements. A data window of 640 samples, 20 cycles at 32 samples per cycle, is used for the DFT calculations. This results in DFT component spacing of FNOM/20 (2.5 or 3.0 Hz for 50 and 60 Hz systems). The four frequencies used in the multisine signal are multiples of 6, 8, 12, and 16 of the DFT component spacing frequency.

Figure 4.6 shows a grounding circuit topology with various impedances that must be accounted for in calculating the insulation resistance. When you perform the field calibration process described in *Field Calibration Process on page 10.3*, the relay measures and saves the key component impedance values required in the calculations.

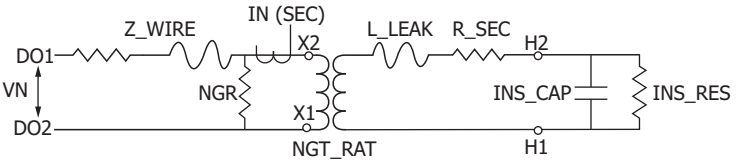

Figure 4.6 Grounding Circuit Topology With Grounding Resistor on the Secondary Side

During normal operation, once the insulation resistance measurement is available, the SEL-2664S compares this value with the user-configurable settings to detect a fault between ground and stator winding of synchronous machines. Two levels of 64S (stator ground) detection are implemented in the SEL-2664S. *Figure 4.7* illustrates the logic of the two 64S elements.

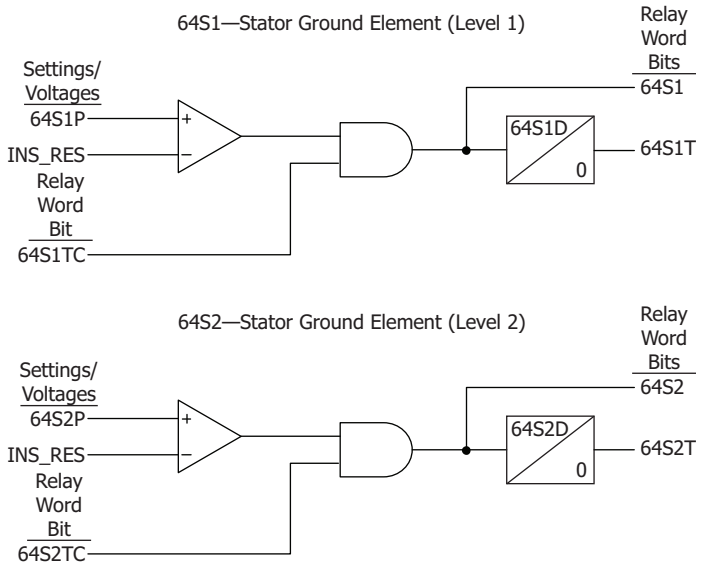

Figure 4.7 64S Elements Logic Diagram

The 64S1P setting defines the sensitivity of the relay Level 1 stator ground element in kΩ primary. The 64S pickup should be set at a safe margin below the normal insulation resistance. Newer generators should have an insulation resistance well above 100 kΩ; however, older generator readings may be lower depending on age and condition. The pickup range is 0.1–10 kΩ. Any pickup within this range should work even for older units. It is a good idea to read the Normal Insulation Resistance from the MET report after an FCA procedure (see *Field Calibration Process on page 10.3*) and review the pickup setting to verify the desired margin. Typically, the pickup values are 1.0–2.0 kΩ for the trip and 5.0–10.0 kΩ for the alarm.

NOTE: Because the SEL-2664S updates the insulation resistance values every 20 cycles, the 64SnD delay of less than 1.2 seconds is not recommended for element security.

The 64S1D setting defines the Level 1 stator ground element time delay. Set the delay to coordinate with other system protective devices or to provide 64S element security. When using the 64S element for tripping, a pickup time delay of 1.0 to 5.0 seconds is an industry normal, e.g., IEEE C37.102-2006 shows a 5 second delay for generator ground protection elements. The element settings can be more sensitive if the 64S is used for warning only. The 64S1TC torque control setting disables the 64S1 element when the result is logical 0 and enables the 64S1 element when the result is logical 1. The Level 2 64S element is identical to the Level 1 64S element.

If you start the generator using variable frequency (e. g., gas turbine, cross-compound, or pumped-storage hydro generators), the security of the 64S elements may be compromised during the start. The SEL-2664S uses a security biased filter in the insulation resistance measurement when Relay Word VFD_STRT is asserted. Use the SELOGIC setting VFD_STRT to indicate the VFD Start in Progress (e. g., a contact input). Set VFD_STRT = 0 if the VFD start is not used in the application.

Table 4.8 Stator Ground Element Settings

Setting Prompt	Setting Range	Setting Name := Factory Default
Enable 64S Elements	SELOGIC	E64S := IN01
64S Level 1 Pickup	OFF, 0.1–10.0 kΩ	64S1P := OFF
64S Level 1 Delay	0.1–400.0 s	64S1D := 20
64S Level 1 Torque Control	SELOGIC	64S1TC := NOT LOW_ISRC
64S Level 2 Pickup	OFF, 0.1–10.0 kΩ	64S2P := OFF
64S Level 2 Delay	0.1–400.0 s	64S2D := 10.0
64S Level 2 Torque Control	SELOGIC	64S2TC := NOT LOW_ISRC
VFD Start in Progress	SELOGIC	VFD_STRT := 0
P Mode Logic Bit1	SELOGIC	P_LOGIC1 := 0
P Mode Logic Bit2	SELOGIC	P_LOGIC2 := 0

Field Ground Protection Elements (64F)

The SEL-2664S works with the SEL-2664 to protect the generator field winding. Connect the SEL-2664 directly to two ends of the generator field winding and the rotor ground brush. When the SEL-2664 calculates the insulation resistance value between the field winding and ground, it uses a fiber-optic cable with ST connectors and a transceiver (SEL-2812MR or MT) to transmit the insulation resistance value to the SEL-2664S. Refer to the *SEL-2664 Field Ground Module Instruction Manual* for detailed instructions on setting up the SEL-2664. You can also set the EIA-232 port in the SEL-2664S to SEL protocol and 9600 data rate to start receiving the insulation resistance value from the SEL-2664. Refer to *Figure 2.12* for the connection diagram.

The SEL-2664S compares the insulation resistance value to the pickup settings (64F1P and 64F2P) of the field ground protection elements (64F1T and 64F2T, see *Figure 4.8*). Set two different pickup levels to alarm and/or trip when the insulation resistance value causes the elements (64F1T or 64F2T) to assert.

If there is no insulation deterioration, there is no leakage path between the field winding to ground; the insulation resistance value is extremely high. In this situation, the SEL-2664S calculates a very large insulation resistance value and clamps the value to 20 megaohms. As soon as the field winding insulation develops a breakdown to the rotor iron (assuming that the generator rotor iron is connected to ground through a grounding brush), the SEL-2664 detects a sharp drop in insulation resistance.

The **MET** command response includes the value of the insulation resistance in kilohms when the element is enabled and functional. The **STA** command response includes the status of the field ground module and the associated communications link.

The technology that the SEL-2664 uses does not discriminate between one point of insulation breakdown and multiple points of insulation breakdown. A single point of insulation breakdown does not harm the generator. Multiple points of insulation breakdown could lead to serious generator damages because the distribution of magnetic flux in the rotor is substantially altered. If you use a different device (such as a generator vibration detector) to detect multiple points of insulation breakdown, SEL recommends that you use the SEL-2664 to generate an alarm only and use the other device, under supervision of the SEL-2664, to trip. If you do not use an additional device, it is a good idea to alarm and trip with the SEL-2664.

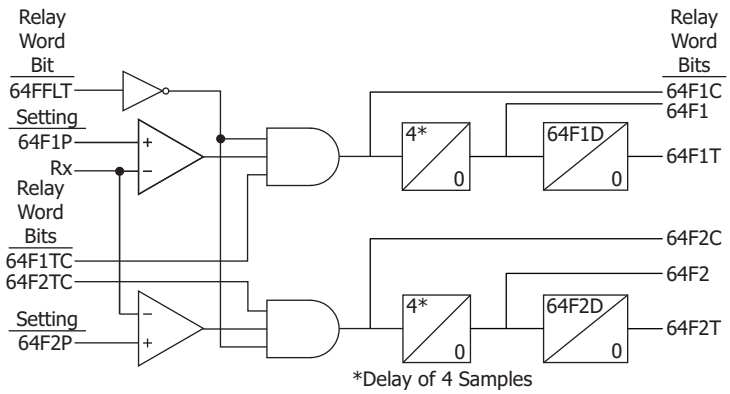

Figure 4.8 Field Ground Protection (64F) Elements Logic

The Relay Word bit 64FFLT indicates the health conditions of the SEL-2664 and the communications channel between the SEL-2664 and the SEL-2664S. If 64FFLT := 1, indicating a non-functional SEL-2664 or fiber-optic connection, then the 64F elements logic is not run, the 64F1, 64F1T, 64F2, and 64F2T Relay Word bits are forced to zero (0), and all accumulated timer values are reset to zero (0). *Table 4.9* lists the setting prompt, range, and factory default name for the rotor field ground protection element settings.

Table 4.9 Rotor Field Ground Protection Element Settings

Setting Prompt	Setting Range	Setting Name := Factory Default
Enable 64F Elements	Y, N	E64F := N
64F Level 1 Pickup	OFF, 0.5–200.0 kΩ	64F1P := OFF
64F Level 1 Delay	0.1–400.0 s	64F1D := 60.0
64F Level 1 Torque Control	SELOGIC	64F1TC := 1
64F Level 2 Pickup	OFF, 0.5–200.0 kΩ	64F2P := OFF
64F Level 2 Delay	0.1–400.0 s	64F2D := 60.0
64F Level 2 Torque Control	SELOGIC	64F2TC := 1

NOTE: When the SEL-2664 Module is connected to the SEL-2664S, first set EIA-232 Port 2 to SEL protocol and a 9600 data rate, and then set E64F to Y to receive the insulation resistance data from the SEL-2664.

When the SEL-2664 is not in use, set the E64F setting to N. When the SEL-2664 is connected to the generator field winding and the SEL-2664S, set the E64F setting to Y. Set the 64F element torque control equation (64FTC1 and 64FTC2) to enable or disable the 64F elements. When the 64FTC1 SELOGIC control equation calculates to zero (0), the 64F1 and 64F1T Relay Word bits along with the associated accumulated timer values are set to zero (0). When the 64FTC2 SELOGIC control equation calculates to zero (0), the 64F2 and 64F2T Relay Word bits along with the associated accumulated timer values are set to zero (0).

OPEN Neutral CBCT Monitor Function

The open neutral CBCT monitor function, as shown in *Figure 4.9*, is used to detect and warn about the insufficient neutral current IN. IN_Min is an internally generated threshold based on the amplifier version and system configuration:

IN_Min (Relay Current Input IN)	Remarks
85.4 µA	Amplifier Version 2.0 when CTN_LOC = SEC
10.7 µA	Amplifier Version 2.0 when CTN_LOC = PRIM
16.0 µA	Amplifier Version 1.0 (original)

An open neutral CBCT can be caused by the following.

- Inadvertent opening of neutral CBCT connections
- Unusually low stator-to-ground capacitance
- Neutral CBCT ratio is too high for the given system configuration

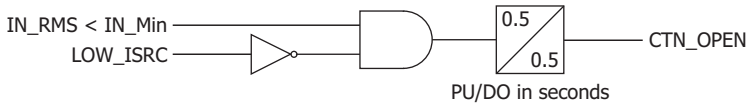

Figure 4.9 OPEN Neutral CBCT Monitor Function

When a CTN_OPEN condition is detected, it is possible that the measurement of the stator-to-ground insulation resistance will still be accurate. We recommend that you check the connections, the CTN ratio selection, and the relay settings when a CTN_OPEN condition occurs.

Amplifier Control

The SEL-2664S amplifier, as shown in *Figure 1.1*, injects a multisine signal for the 64S element. When E64S = 1 (asserted), under normal conditions, AMP_ON asserts. This means that the amplifier is turned on and is injecting multisine signals into the system.

Conditions that prevent the amplifier from working normally include the following.

1. VN-NN terminal is open (indicated by the assertion of the Relay Word bit OUT_OPEN)
2. Excessive voltage is back fed over the VN-NN terminals from the generator side (applied peak voltage across the VN-NN terminals exceeds 74 or 26 volts [depending on Amplifier Version 2.0 or 1.0 {original}, respectively], e.g., fundamental, third-harmonic, or transient voltage)
3. Hardware protection (e.g. overcurrent, temperature) is activated
4. External control input programmed in the E64S setting is open
5. Amplifier is locked out

If any of the previous conditions (except 4 and 5) are true, the control automatically shuts down the amplifier and initiates a sequence that attempts to restart the amplifier every three seconds for as many as 10 times within 5 minutes.

If the amplifier remains shut down for longer than 5 minutes or the amplifier control retries for 10 times, the amplifier locks out and stops injecting signals. AMP_LO is the Relay Word bit that indicates this condition.

When the amplifier locks out, make sure all the system conditions previously mentioned are cleared. Amplifier lockout is reset by pushing the front-panel **TARGET RESET** button or by issuing the **TAR R** command. Once the lockout condition is cleared, the amplifier starts injecting the multisine signals.

The amplifier shutdown disables 64S protection elements in the relay. However, the 59N1, 59NRMS, and 64F elements continue to protect the generator.

Many generators produce varying amount of third-harmonic voltage during normal operation; however, when properly applied, 64S protection should remain in service under practical levels (typically up to 15 percent) of third-harmonic voltage.

If there is a stator-to-ground fault, the voltage back-feed over the VN-NN terminals may exceed the voltage that the amplifier can accommodate. When this happens, the Relay Word bit that indicates the amplifier switch status, (as shown in *Figure 1.1*), DCSW_STS asserts. If the amplifier switch is open, the amplifier shuts down and the Relay Word bit SHUTDOWN asserts.

Trip/Close Logic Settings

The SEL-2664S tripping logic is designed to trip the circuit breakers. The relay logic lets you define the conditions that cause a trip, the conditions that unlatch the trip, and the performance of the relay output contact. *Figure 4.10* illustrates the tripping logic.

NOTE: The factory-default assignment of the Relay Word bit TRIP is the output **OUT02**. See *Table 4.11* for the output contacts settings.

Table 4.10 Trip/Close Logic Settings

Setting Prompt	Setting Range	Setting Name := Factory Default
Minimum Trip Duration	0.0–400.0 s	TDURD := 0.1
Protection Trip Equation	SELOGIC	TR := 64S1T OR 64F1T OR 59N1T OR 59NRMST
Unlatch Trip Equation	SELOGIC	ULTRIP := NOT TR
Warning Equation	SELOGIC	WARNING := 64S2T OR 64F2T OR NOT E64S OR NGROPEN OR NGRSHORT OR CTN_OPEN OR AMP_LO OR IN_CLIP

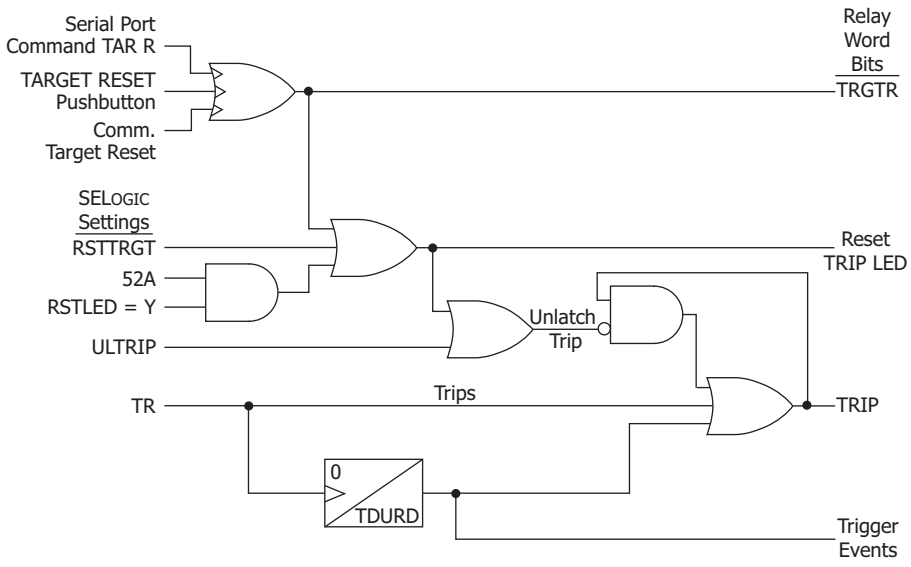

Figure 4.10 Trip Logic

The trip logic settings, including the SELOGIC control equations, are described in the following paragraphs.

TDURD Minimum Trip Time

This timer establishes the minimum time duration for which the TRIP Relay Word bit asserts. This is a rising-edge initiated timer. Trips initiated by the TR Relay Word bit are maintained for at least the duration of the minimum trip duration time (TDURD) setting.

TR Trip Conditions SELOGIC Control Equation

NOTE: The outputs in the SEL-2664S are not designed to interrupt the trip coil current. An auxiliary contact with adequate current interrupting capacity must clear the trip coil current before the output of the SEL-2664S opens. Failure to observe this safeguard could result in damage to the SEL-2664S output contacts. Avoid programming Relay Word bit TR in the output equation to directly trip the breaker. Instead use Relay Word bit TRIP, which stays asserted for at least the duration of the TDURD setting or until TRIP is unlatched, whichever is longer.

The SEL-2664S TR SELOGIC control equation provides the trip logic to trip the breaker. The Relay Word bit TRIP is associated with the TR SELOGIC control equation.

The default TR setting is shown in *Table 4.10* and includes the stator ground element and the neutral overvoltage element.

The default relay settings have output **OUT02** set to TRIP and the fail-safe setting **OUT02FS** at N (see *Fail-Safe/ Nonfail-Safe Operation* on page 2.10).

Set the TR **SELOGIC** control equation to include an OR combination of all the Relay Word bits for which you want the relay to trip. The factory-default setting already includes commonly used Relay Word bits.

Unlatch Trip Logic

Following a fault, the trip signal is maintained until all of the following conditions are true:

- Minimum trip duration time (TDURD) passes.
- The TR **SELOGIC** control equation result deasserts to logical 0.

NOTE: The factory-default setting of the ULTRIP provides an automatic reset of the trip when the trip is not present (NOT TR).

- One of the following occurs:
  - Unlatch Trip **SELOGIC** control equation setting ULTRIP asserts to logical 1.
  - Target Reset **SELOGIC** control equation setting RSTTRGT asserts to logical 1.
  - Target Reset Relay Word TRGTR asserts. The TRGTR asserts when the front-panel TARGET RESET pushbutton is pressed or a target reset serial port command is executed (ASCII or Modbus).

Output Contacts

NOTE: When an output contact is not used for a specific function, you must set the associated SELOGIC control equation to either 0 or 1.

Table 4.11 Control Output Equations and Contact Behavior Settings

Setting Prompt	Setting Range	Setting Name := Factory Default
OUT01 Fail-Safe	Y, N	OUT01FS := Y
OUT01	SELOGIC	OUT01 := HALARM OR SALARM
OUT02 Fail-Safe	Y, N	OUT02FS := N
OUT02	SELOGIC	OUT02 := TRIP
OUT03 Fail-Safe	Y, N	OUT03FS := N
OUT03	SELOGIC	OUT03 := WARNING
OUT04 Fail-Safe	Y, N	OUT04FS := N
OUT04	SELOGIC	OUT04 := 0

You can use SELOGIC control equations to map protection (trip and warning) and general-purpose control elements to the outputs with the SEL-2664S. In addition, you can enable fail-safe output contact operation for relay contacts on an individual basis.

If the contact fail-safe is enabled, the relay output is held in its energized position when relay control power is applied. The output falls to its de-energized position when control power is removed. Contact positions with de-energized output relays are indicated on the relay chassis and in *Figure 2.12* and *Figure 2.18*.

When TRIP output fail-safe is enabled and the TRIP contact is appropriately connected, the breaker is automatically tripped when the relay control power fails.

Time and Date Management Settings

The SEL-2664S supports several methods of updating the relay time and date. For SNTP applications, refer to *Simple Network Time Protocol (SNTP)* on page 7.11. See *Table 4.12* for the time and date management settings that are available in the Group settings.

Table 4.12 Time and Date Management Settings (Sheet 1 of 2)

Setting Description	Setting Range	Setting Name := Factory Default
IRIG Time Source	IRIG1, IRIG2	TIME_SRC := IRIG1
IRIG-B Control Bits Definition	NONE, C37.118	IRIGC := NONE
Offset From UTC	–24.00 to 24.00 hours, rounds up to nearest 0.25 hour	UTC_OFF := 0.00
Month To begin DST	OFF, 1–12	DST_BEGM := OFF

Table 4.12 Time and Date Management Settings (Sheet 2 of 2)

Setting Description	Setting Range	Setting Name := Factory Default
Week Of The Month To Begin DST	1–3, L	DST_BEGW := 2
Day Of The Week To Begin DST	SUN, MON, TUE, WED, THU, FRI, SAT, SUN	DST_BEGD := SUN
Local Hour To Begin DST	0–23	DST_BEGH := 2
Month To End DST	1–12	DST_ENDM := 11
Week Of The Month To End DST	1–3, L	DST_ENDW := 1
Day Of The Week To End DST	SUN, MON, TUE, WED, THU, FRI, SAT, SUN	DST_ENDD := SUN
Local Hour To End DST	0–23	DST_ENDH := 2

Automatic Daylight-Saving Time Settings

The SEL-2664S automatically switches to and from daylight-saving time, as specified by the eight Group settings DST_BEGM through DST_ENDH. The first four settings control the month, week, day, and time that daylight-saving time shall commence, while the last four settings control the month, week, day, and time that daylight-saving time shall cease.

Once configured, the SEL-2664S changes to and from daylight-saving time every year at the specified time. Relay Word bit DST asserts when daylight-saving time is active. The SEL-2664S interprets the week number settings DST_BEGW and DST_ENDW (1–3, L = Last) as follows:

- The first seven days of the month are considered to be in week 1.
- The second seven days of the month are considered to be in week 2.
- The third seven days of the month are considered to be in week 3.
- The last seven days of the month are considered to be in week “L”.

This method of counting of the weeks allows easy programming of statements, such as “the first Sunday”, “the second Saturday”, or “the last Tuesday” of a month. As an example, consider the following settings:

DST_BEGM = 3	DST_ENDM = 10
DST_BEGW = L	DST_ENDW = 3
DST_BEGD = SUN	DST_ENDD = WED
DST_BEGH = 2	DST_ENDH = 3

With these example settings, the relay enters daylight-saving time on the last Sunday in March at 0200 hours, and leaves daylight-saving time on the third Wednesday in October at 0300 hours. The relay asserts Relay Word bit DST when DST is active.

When you use an IRIG-B time source, the relay time follows the IRIG-B time, including daylight-saving time start and end, as commanded by the time source. If there is a discrepancy between the daylight-saving time settings and the received IRIG-B signal, the relay follows the IRIG-B signal.

When you use IEEE C37.118-compliant IRIG-B signals (e.g., Group setting IRIGC = C37.118), the relay automatically populates the DST Relay Word bit, regardless of the daylight-saving time settings.

When you use regular IRIG-B signals (e.g., Group setting IRIGC = NONE), the relay only populates the DST Relay Word bit of the daylight-saving time settings that are properly configured

Time-Synchronization Source

The SEL-2664S accepts a demodulated IRIG-B time signal. *Table 4.12* shows the setting to identify the input for the signal. Set TIME_SRC := IRIG1 when you use the relay terminal, EIA-232 serial Port 3, for the time signal input. When you use the fiber-optic Port 2 for the signal, set the TIME_SRC := IRIG2. Refer to *IRIG-B Time-Code Input* on page 2.9 and *IRIG-B* on page 7.5 for additional information.

Data Reset Setting

Table 4.13 shows the data reset setting. The RSTTRGT SELOGIC setting, on the rising edge of assertion, resets the trip output and relay TRIP LED, provided there is no trip condition present.

Table 4.13 Data Reset Setting

Setting Prompt	Setting Range	Setting Name := Factory Default
Reset Targets	SELOGIC	RSTTRGT := 0

Logic Settings (SET L Command)

Settings associated with latches, timers, counters, math variables, and output contacts are listed below.

SELOGIC Enables

Table 4.14 shows the enable settings for latch bits (ELAT), SELOGIC control equations (including timers) (ESV), Counters (ESC), and math variable equations (EMV). This helps limit the number of settings that you need to make. For example, if you need six timers, only enable six timers.

Table 4.14 Enable Settings

Setting Prompt	Setting Range	Default Setting
SELOGIC LATCHES	N, 1–8	ELAT := N
SV /TIMERS	N, 1–8	ESV := N
SELOGIC COUNTERS	N, 1–8	ESC := N
MATH VARIABLES	N, 1–8	EMV := N

Latch Bits

Latch control switches (latch bits are the outputs of these switches) replace traditional latching devices. Traditional latching devices maintain output contact state. The SEL-2664S latch control switch also retains state even when power to the device is lost. If the latch control switch is set to a programmable output contact and power to the device is lost, the state of the latch control switch is stored in

nonvolatile memory, but the device de-energizes the output contact. When power to the device is restored, the programmable output contact will go back to the state of the latch control switch after device initialization. Traditional latching device output contact states are changed by pulsing the latching device inputs (see *Figure 4.11*). Pulse the set input to close (set) the latching device output contact. Pulse the reset input to open (reset) the latching device output contact. The external contacts wired to the latching device inputs are often from remote control equipment (e.g., SCADA, RTU).

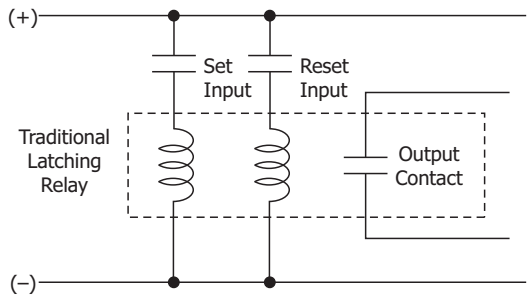

Figure 4.11 Schematic Diagram of a Traditional Latching Device

Eight latch control switches in the SEL-2664S provide latching device functionality. *Figure 4.12* shows the logic diagram of a latch switch. The output of the latch control switch is a Relay Word bit LT*n* (*n* = 01–08), called a latch bit.

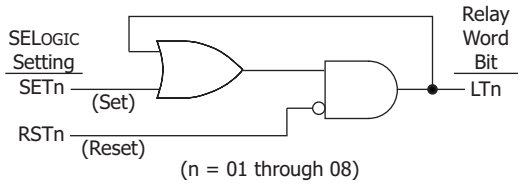

Figure 4.12 Logic Diagram of a Latch Switch

If setting SET*n* asserts to logical 1, latch bit LT*n* asserts to logical 1. If setting RST*n* asserts to logical 1, latch bit LT*n* deasserts to logical 0. If both settings SET*n* and RST*n* assert to logical 1, setting RST*n* has priority and latch bit LT*n* deasserts to logical 0. You can use these latch bits in SELOGIC control equations to create custom logic for your application.

The SEL-2664S includes 8 latches. *Table 4.15* shows the **SET** and **RESET** default settings for Latch 1. The remaining latches have the same settings.

Table 4.15 Latch Bits Equation Settings

Settings Prompt	Setting Range	Setting Name := Factory Default
SET01	SELOGIC	SET01 := NA
RST01	SELOGIC	RST01 := NA
⋮	⋮	⋮
SET08	SELOGIC	SET08 := NA
RST08	SELOGIC	RST08 := NA

Latch Bits: Nonvolatile State

Power Loss

The states of the latch bits (LT01–LT08) are retained if power to the device is lost and then restored. If a latch bit is asserted (e.g., LT02 := logical 1) when power is lost, it is asserted (LT02 := logical 1) when power is restored. If a latch bit is deasserted (e.g., LT03 := logical 0) when power is lost, it is deasserted (LT03 := logical 0) when power is restored.

Settings Change

If individual settings are changed, the states of the latch bits (LT01–LT08) are retained, as in the preceding *Power Loss* explanation. If the individual settings change causes a change in SELOGIC control equation settings SET*n* or RST*n* (*n* = 01 through 08), the retained states of the latch bits can be changed, subject to the newly enabled settings SET*n* or RST*n*.

Make Latch Control Switch Settings With Care

The latch bit states are stored in nonvolatile memory so they can be retained during power loss or settings change. The nonvolatile memory is rated for a finite number of writes for all cumulative latch bit state changes. Exceeding the limit can result in a flash self-test failure. *An average of 70 cumulative latch bit state changes a day can be made for a 25-year device service life*.

Settings SET*n* and RST*n* cannot result in continuous cyclical operation of latch bit LT*n*. Use timers to qualify conditions set in settings SET*n* and RST*n*. If you use any optoisolated inputs in settings SET*n* and RST*n*, the inputs each have a fixed pickup and dropout debounce delay that can help in providing the necessary time qualification.

SELOGIC Control Equation Variables/Timers

Enable the number of SELOGIC control equations necessary for your application. Only the enabled SELOGIC control equations appear for settings. Each SELOGIC control equation variable/timer has a SELOGIC control equation setting input and variable/timer outputs as shown in *Figure 4.13*. Timers SV01T through SV08T in *Figure 4.13* have a setting range of 0.00–3000.00 seconds. This timer setting range applies to both pickup and dropout times (SV*n*PU and SV*n*DO, *n* = 01 through 08).

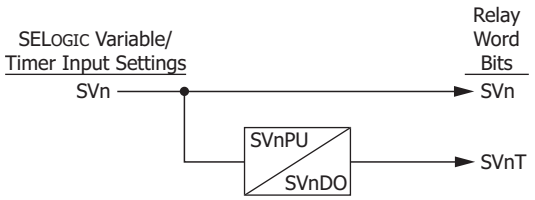

Figure 4.13 SELOGIC Control Equation Variable/Timers SV01/SV01T–SV08T

You can enter as many as 15 elements for a SELOGIC equation, including a total of 14 elements in parentheses (see *Table 4.16* for more information).

SELOGIC Control Equation Operators

Use the Boolean operators to combine values with a resulting Boolean value. Edge trigger operators provide a pulse output. Combine the operators and operands to form statements that evaluate complex logic. SELOGIC control equations are either Boolean type or math type. Because the equals sign (=) is already used as an equality comparison, both Boolean type and math type of SELOGIC control equation settings begin with an "assignment" operator (:=) instead of with an equals sign.

Boolean SELOGIC control equation settings use logic similar to Boolean algebra logic, combining Relay Word bits together with one or more of the Boolean operators listed in *Table 4.16*. Math SELOGIC control equation settings operate on numerical values, using one or more of the Mathematical operators listed in *Table 4.16*. These numerical values can be mathematical variables or actual real numbers.

The executed result of a math SELOGIC control equation is stored in a math variable. The smallest and largest values a math variable can represent are –16777215.99 and +16777215.99, respectively. If the executed result exceeds these limits, it will be clipped at the limit value. For example, when the MV01 := executed result is –16777219.00, MV01 will be –16777215.99. Similarly, when the MV02 := executed result is +16777238.00, MV02 will be +16777215.99.

Operator Precedence

When you combine several operators and operands within a single expression, the SEL-2664S evaluates the operators from left to right, starting with the highest precedence operators and working down to the lowest precedence. This means that if you write an equation with three AND operators, for example SV01 AND SV02 AND SV03, each AND will be evaluated from the left to the right. If you substitute NOT SV04 for SV03 to make SV01 AND SV02 AND NOT SV04, the device evaluates the NOT operation of SV04 first and uses the result in subsequent evaluation of the expression.

Table 4.16 SELOGIC Control Equation Operators (Listed in Operator Precedence)

Operator	Function	Function Type (Boolean and/or Mathematical)
( )	parentheses	Boolean and Mathematical (highest precedence)
–	negation	Mathematical
NOT	NOT	Boolean
R_TRIG	rising-edge trigger/detect	Boolean
F_TRIG	falling-edge trigger/detect	Boolean
* /	multiply divide	Mathematical
+ -	add subtract	Mathematical
<, >, <=, >=	comparison	Boolean
= <>	equality inequality	Boolean
AND	AND	Boolean
OR	OR	Boolean (lowest precedence)

Parentheses Operator ( )

You can use more than one set of parentheses in a SELOGIC control equation setting. For example, the following Boolean SELOGIC control equation setting has two sets of parentheses:

SV04 := **(SV04 OR IN02) AND (SV05 OR RB01)**

The logic within the parentheses is processed first and then the two parentheses resultants are ANDed together. Use as many as 14 sets of parentheses in a single SELOGIC control equation setting. The parentheses can be "nested" (parentheses within parentheses).

Math Negation Operator (–)

The negation operator – changes the sign of a numerical value. For example:

MV01 := **RB01**

When Remote bit RB01 asserts, Math variable MV01 has a value of 1, i.e., MV01 = 1. We can change the sign on MV01 with the following expression:

MV01 := **-1 * RB01**

Now, when Remote bit RB01 asserts, Math variable MV01 has a value of –1, i.e., MV01 = –1.

Boolean NOT Operator (NOT)

Apply the NOT operator to a single Relay Word bit and to multiple elements (within parentheses).

An example of a single Relay Word bit is as follows:

SV01 := **NOT RB01**

When Remote bit RB01 asserts from logical 0 to logical 1, the Boolean NOT operator, in turn, changes the logical 1 to a logical 0. In this example, SV01 deasserts when RB01 asserts.

Following is an example of the NOT operator applied to multiple elements within parentheses.

The Boolean SELOGIC control equation OUT01 setting could be set as follows:

OUT01 := **NOT(RB01 OR SV02)**

If both RB01 and SV02 are deasserted (= logical 0), output contact OUT01 asserts, i.e., OUT01 := NOT (logical 0 OR logical 0) = NOT (logical 0) = logical 1.

In a Math SELOGIC control equation, use the NOT operator with any Relay Word bits. This allows a simple if/else type equation, as shown in the following example.

MV01 := **12 * IN01 + (MV01 + 1) * NOT IN01**

This equation sets MV01 to 12 whenever IN01 asserts, otherwise it increments MV01 by 1 each time the equation is executed.

Boolean Rising-Edge Operator (R_TRIG)

Apply the rising-edge operator, R_TRIG, to individual Relay Word bits only; you cannot apply R_TRIG to groups of elements within parentheses. When any Relay Word bit asserts (going from logical 0 to logical 1), R_TRIG interprets this logical 0 to logical 1 transition as a rising edge and asserts to logical 1 for one processing interval.

For example, the Boolean SELOGIC control equation event report generation setting uses rising-edge operators:

ER := **R_TRIG IN01 OR R_TRIG IN02**

The rising-edge operators detect a logical 0 to logical 1 transition each time one of IN01 or IN02 asserts. Using these settings, the device triggers a new event report each time IN01 or IN02 asserts anew, if the device is not already recording an event report. You can use the rising-edge operator with the NOT operator as long as the NOT operator precedes the R_TRIG operator. The NOT R_TRIG combination produces a logical 0 for one processing interval when it detects a rising edge on the specified element.

Boolean Falling-Edge Operator (F_TRIG)

Apply the falling-edge operator, F_TRIG, to individual Relay Word bits only; you cannot apply F_TRIG to groups of elements within parentheses. The falling-edge operator, F_TRIG, operates similarly to the rising-edge operator, but operates on Relay Word bit deassertion (elements going from logical 1 to logical 0) instead of Relay Word bit assertion. When the Relay Word bit deasserts, F_TRIG interprets this logical 1 to logical 0 transition as a falling edge and asserts to logical 1 for one processing interval, as shown in *Figure 4.14*.

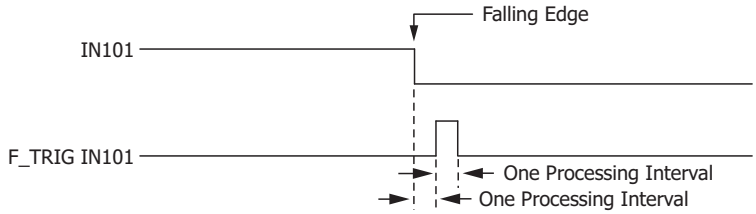

Figure 4.14 Result of Falling-Edge Operator on a Deasserting Input

You can use the falling-edge operator with the NOT operator as long as the NOT operator precedes the F_TRIG operator. The NOT F_TRIG combination produces a logical 0 for one processing interval when it detects a falling edge on the specified element.

Math Arithmetic Operators

If Relay Word bits (which are effectively Boolean resultants, equal to logical 1 or logical 0) are used in mathematical operations (*, /, +, and –), they are treated as numerical values 0 and 1, depending on if the Relay Word bit is equal to logical 0 or logical 1, respectively.

Boolean Comparison Operators

Comparisons (<, >, <=, and >=) are mathematical operations that compare two numerical values, with the result being a logical 0 (if the comparison is not true) or logical 1 (if the comparison is true). Thus, what starts out as a mathematical comparison ends up as a Boolean resultant.

For example, if the output of a math variable is higher than a certain value, an output contact is asserted:

OUT03 := **MV01 > 8**

If the math variable (MV01) is greater than 8 in value, output contact OUT03 asserts (OUT03 = logical 1). If the math variable (MV01) is less than or equal to 8 in value, output contact OUT03 deasserts (OUT03 = logical 0).

Boolean Equality and Inequality Operators

Equality (=) and inequality (<>) operators operate similar to the comparison operators. These are mathematical operations that compare two numerical values, with the result being a logical 0 (if the comparison is not true), or logical 1 (if the comparison is true). Thus, what starts out as a mathematical comparison, ends up as a Boolean resultant. For example, if the output of a math variable is not equal to a certain value, an output contact is asserted:

OUT02 := **MV01 <> 45**

If the math variable (MV01) is not equal to 45 in value, output contact OUT02 asserts (effectively OUT02 := logical 1). If the math variable (MV01) is equal to 45 in value, output contact OUT02 deasserts (effectively OUT02 := logical 0). The following table shows other operators and values that you can use in writing SELOGIC control equations.

Table 4.17 Other SELOGIC Control Equation Operators/Values

Operator/ Value	Function	Function Type (Boolean and/or Mathematical)
0	Set SELOGIC control equation directly to logical 0 (XXX := 0)	Boolean
1	Set SELOGIC control equation directly to logical 1 (XXX := 1)	Boolean
#	Characters entered after the # operator are not processed and deemed as comments	Boolean and Mathematical
\	Indicates that the preceding logic should be continued on the next line ("\" is entered only at the end of a line)	Boolean and Mathematical

Timers Reset When Power Lost or Settings Changed

If the device loses power or settings change, the SELOGIC control equation variables/timers reset. Relay Word bits SV*n* and SV*n*T (*n* = 01–08) reset to logical 0 after power restoration or a settings change. *Figure 4.15* shows an effective seal-in logic circuit, created by the use of Relay Word bit SV07 (SELOGIC control equation variable SV07) in SELOGIC control equation SV07:

SV07 = **(SV07 OR OUT01) AND (OUT02 OR OUT03)**

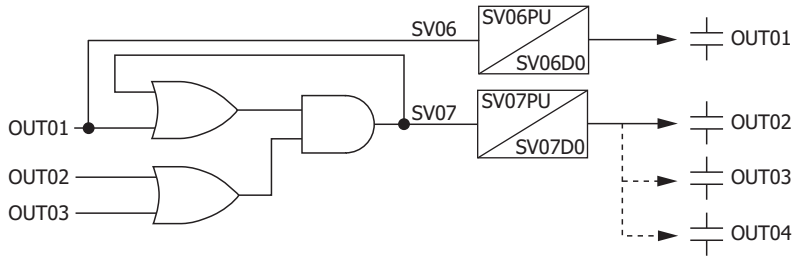

Figure 4.15 Example Use of SELOGIC Variables/Timers

SV/Timers Settings

The SEL-2664S includes eight SELOGIC variables. *Table 4.18* shows the pickup, dropout, and equation settings for SV01 and SV02. The remaining SELOGIC variables have the same default settings as SV01 and SV02.

Table 4.18 SELOGIC Variable Settings

Setting Prompt	Setting Range	Default Settings
SV TIMER PICKUP	0.00–3000.00 s	SV01PU := 0.00
SV TIMER DROPOUT	0.00–3000.00 s	SV01DO := 0.00
SV INPUT	SELOGIC	SV01 := NA
SV TIMER PICKUP	0.00–3000.00 s	SV02PU := 0.000
SV TIMER DROPOUT	0.00–3000.00 s	SV02DO := 0.000
SV INPUT	SELOGIC	SV02 := NA
• • •		
SV TIMER PICKUP	0.00–3000.00 s	SV08PU := 0.00
SV TIMER DROPOUT	0.00–3000.00 s	SV08DO := 0.00
SV INPUT	SELOGIC	SV08 := NA

Counter Variables

NOTE: These counter elements conform to the standard counter function block #3 in IEC 1131-3 First Edition 1993-03 International Standard for Programmable controllers—Part 3: Programming languages.

SELOGIC counters are up- or down-counting elements, updated every processing interval. Each counter element consists of one count setting, four control inputs, two digital outputs, and one analog output. *Figure 4.16* shows Counter 01, the first of eight counters available in the device.

NOTE: If setting SCnnCD is set to NA, the entire counter nn is disabled.

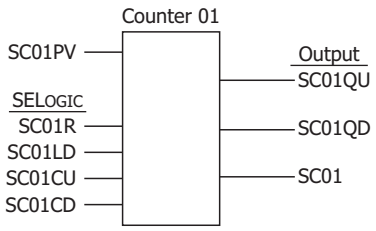

Figure 4.16 Counter 01

Digital output SC01QD asserts when the counter is at position zero, and Digital output SC01QU asserts when the counter reaches the programmable count value. Use the reset input (SC01R) to force the count to zero, and the analog output

(SC*nn*) with analog comparison operators. *Table 4.19* describes the counter inputs and outputs, and *Table 4.20* shows the order of precedence of the control inputs.

Table 4.19 Counter Input/Output Description

Name	Type	Description
SC*nn*LD	Active High Input	Load counter with the preset value to assert the output (SC*n*QU) (follows SELOGIC setting).
SC*nn*PV	Input Value	This Preset Value is loaded when SC*n*LD pulsed. This Preset Value is the number of counts before the output (SC*n*QU) asserts (follows SELOGIC setting).
SC*nn*CU	Rising-Edge Input	Count Up increments the counter (follows SELOGIC setting).
SC*nn*CD	Rising-Edge Input	Count Down decrements the counter (follows SELOGIC setting).
SC*nn*R	Active High Input	Reset counter to zero (follows SELOGIC setting)
SC*nn*QU	Active High Output	This Q Up output asserts when the Preset Value (maximum count) is reached (SC*n* = SC*n*PV, *n* = 01 to 08).
SC*nn*QD	Active High Output	This Q Down output asserts when the counter is equal to zero (SC*n* = 0, *n* = 01 to 08).
SC*nn*	Output Value	This counter output is an analog value that can be used with analog comparison operators in a SELOGIC control equation and viewed using the **COU** command.

Table 4.20 Order of Precedence of the Control Inputs

Order	Input
1	SC*nn*R
2	SC*nn*LD
3	SC*nn*CU
4	SC*nn*CD

Figure 4.17 shows an example of the effects of the input precedence, with SC01PV set to 7. The vertical dashed line indicates the relationship between SC01CU first being seen as a rising edge and the resultant outputs. This indicates that there is no intentional lag between the control input asserting and the count value changing. Most of the pulses in the diagram are on every second processing interval. The “one processing interval” valley is an example where the CD and CU pulses are only separated by one processing interval.

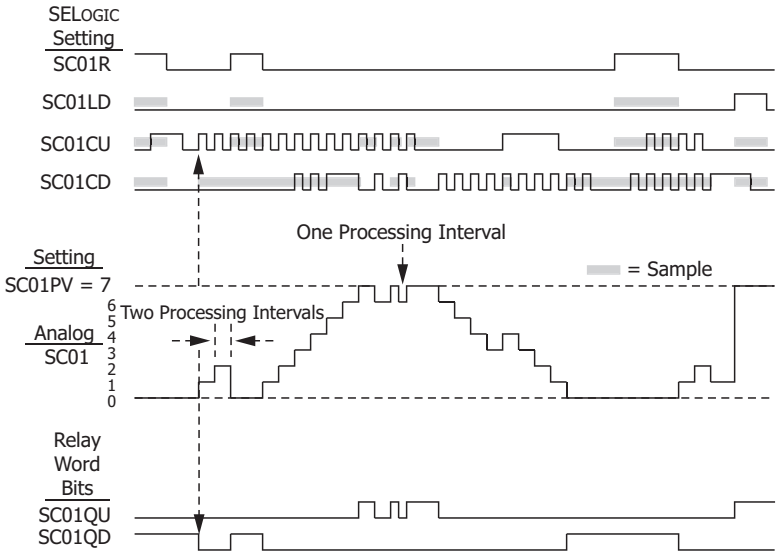

Figure 4.17 Example of the Effects of the Input Precedence

The shaded areas illustrate the precedence of the inputs:

- When SC01R is asserted, the SC01LD input is ignored.
- When SC01R or SC01LD is asserted, rising edges on the SC01CU or SC01CD inputs are ignored.
- When input SC01CU has a rising edge, a rising edge on SC01CD is ignored (unless SC01 is already at the maximum value SC01PV (= 7), in which case SC01CU is ignored, and the SC01CD is processed). An example of this exception appears in *Figure 4.17*, just before the "one processing interval" notation.

A maintained logical 1 state on the SC01CU or SC01CD inputs is ignored (after the rising edge is processed). A rising edge received on the SC01CU or SC01CD inputs is ignored when the SC01R or SC01LD inputs are asserted.

IMPORTANT: Upon relay initial power up, Port 1 setting changes, or Logic setting changes, you may have to wait as long as two minutes before an additional setting change can occur. Note that the relay is functional with protection enabled, as soon as the **ENABLED** LED comes ON (about 5–10 seconds from turn on).

A maintained logical 1 on the SC01CU or SC01CD inputs does not get treated as a rising edge when the SC01R or SC01LD input deasserts.

The same operating principles apply for all of the counters: SC01–SC*mm*, where *mm* = the number of enabled counters. When a counter is disabled by setting, the present count value is forced to 0 (SC*nn* := 0), causing Relay Word bit SC*nn*QD to assert (SC*nn*QD := logical 1), and Relay Word bit SC*nn*QU to deassert (SC*nn*QU := logical 0).

MIRRORED BITS Transmit SELOGIC Control Equations

See *Appendix G: MIRRORED BITS Communications* and *SEL-2664S Settings Sheets* for details.

Port Settings (SET P Command)

The SEL-2664S provides settings that allow you to configure the parameters for the communications ports. See *Section 2: Installation* for a detailed description of port connections. On the unit: **PORT F** (front panel) is an EIA-232 port; **PORT 1** is

a dual fiber-optic Ethernet port; **PORT 2** is a fiber-optic serial port; and **PORT 3** (rear) is an EIA-232 port. See *Table 4.21* through *Table 4.24* for the port settings, also see the appropriate Appendix for additional information on the protocol (DNP, MODBUS, IEC-61850, and MIRRORED BITS) of interest.

The EPORT setting provides you with access controls for the corresponding port. Setting EPORT to N disables the port and hides the remaining port settings.

PORT F

Table 4.21 Front-Panel Serial Port Settings

Setting Prompt	Setting Range	Setting Name := Factory Default
ENABLE PORT	Y, N	EPORT := Y
PROTOCOL	SEL	PROTO := SEL
SPEED	300–38400 bps	SPEED := 9600
DATA BITS	7, 8 bits	BITS := 8
PARITY	O, E, N	PARITY := N
STOP BITS	1, 2 bits	STOP := 1
HDWR HANDSHAKING	Y, N	RTSCTS := N
PORT TIME-OUT	0–30 min	T_OUT := 5
SEND AUTOMESSAGE	Y, N	AUTO := N

PORT 1

IMPORTANT: Upon relay initial power up, Port 1 setting changes, or Logic setting changes, you may have to wait as long as two minutes before an additional setting change can occur. Note that the relay is functional with protection enabled, as soon as the **ENABLED** LED comes ON (about 5–10 seconds from turn on).

Table 4.22 Ethernet Port Settings (Sheet 1 of 2)

Setting Prompt	Setting Range	Setting Name := Factory Default
ENABLE PORT	Y, N	EPORT := Y
IP ADDRESS	zzz.yyy.xxx.www	IPADDR := 192.168.1.2
SUBNET MASK	15 characters	SUBNETM := 255.255.255.0
DEFAULT ROUTER	15 characters	DEFRTR := 192.168.1.1
ENABLE TCP KEEP-ALIVE	(Y, N)	ETCPKA := Y
TCP KEEP-ALIVE IDLE RANGE	1–20 sec	KAIDLE := 10
TCP KEEP-ALIVE INTERVAL RANGE	1–20 sec	KAINTV := 1
TCP KEEP-ALIVE COUNT RANGE	1–20	KACNT := 6
FAST OP MESSAGES	Y, N	FASTOP := N
OPERATING MODE	FIXED, FAILOVER, SWITCHED	NETMODE := FAILOVER
FAILOVER TIMEOUT	0.10–65.00 sec	FTIME := 1.00
PRIMARY NETPORT	A, B	NETPORT := A
NETWRK PORTA SPD	AUTO, 10, 100 Mbps	NETASPD := AUTO
NETWRK PORTB SPD	AUTO, 10, 100 Mbps	NETBSPD := AUTO

NOTE: The FAST OP MESSAGES setting only functions when using SEL Fast Operate protocol to operate/set/pulse breaker bits and remote bits. This setting has no effect on Modbus, DNP, or IEC 61850 protocols.

Table 4.22 Ethernet Port Settings (Sheet 2 of 2)

Setting Prompt	Setting Range	Setting Name := Factory Default
ENABLE TELNET	Y, N	ETELNET := Y
TELNET PORT	23, 1025–65534	TPORT := 23
TELNET TIME OUT	1–30 min	TIDLE := 15
ENABLE FTP	Y, N	EFTPSERV := Y
FTP USER NAME	20 characters	FTPUSER := FTPUSER
ENABLE IEC 61850 PROTOCOL	Y, N	E61850 := N
ENABLE IEC 61850 GSE	Y, N	EGSE := N
ENABLE MODBUS SESSIONS	0–2	EMOD := 0
MODBUS TCP PORT 1	1–65534	MODNUM1 := 502
MODBUS TCP PORT 2	1–65534	MODNUM2 := 502
MODBUS TIMEOUT 1	15–900 sec	MTIMEO1 := 15
MODBUS TIMEOUT 2	15–900 sec	MTIMEO2 := 15
ENABLE DNP SESSION[a]	0–3	EDNP := 0
ENABLE SNTP CLIENT[b]	OFF, UNICAST, MANYCAST, BROADCAST	ESNTP := OFF

[a] See *Table D.1* for a complete list of the DNP3 session settings.
[b] See *Table 7.4* for a complete list of SNTP settings and their descriptions.

PORT 2

Table 4.23 Fiber-Optic Serial Port Settings

Setting Prompt	Setting Range	Setting Name := Factory Default
ENABLE PORT	Y, N	EPORT := Y
PROTOCOL	SEL, DNP, MOD, MBA, MBB, MB8A, MB8B, MBTA, MBTB	PROTO := SEL
SPEED	300–38400 bps	SPEED := 9600
DATA BITS	7, 8 bits	BITS := 8
PARITY	O, E, N	PARITY := N
STOP BITS	1, 2 bits	STOP := 1
PORT TIME-OUT	0–30 min	T_OUT := 5
SEND AUTOMESSAGE	Y, N	AUTO := N
FAST OP MESSAGES	Y, N	FASTOP := N
MODBUS SLAVE ID	1–247	SLAVEID := 1

NOTE: For additional settings when PROTO := MBxx, see *Table G.5*. For additional settings when PROTO := DNP, see *Table D.7* for a complete list of the DNP3 session settings.

NOTE: When the SEL-2664 is connected to the SEL-2664S, first set EIA-232 Port 2 to SEL protocol and a 9600 data rate, and then set E64F to Y to receive the insulation resistance data from the SEL-2664.

PORT 3

NOTE: For additional settings when PROTO := MBxx, see *Table G.5*. For additional settings when PROTO := DNP, see *Table D.7* for a complete list of the DNP3 session settings.

Table 4.24 Rear-Panel Serial Port (EIA-232) Settings

Setting Prompt	Setting Range	Setting Name := Factory Default
ENABLE PORT	Y, N	EPORT := Y
PROTOCOL	SEL, DNP, MOD, MBA, MBB, MB8A, MB8B, MBTA, MBTB	PROTO := SEL
SPEED	300–38400 bps	SPEED := 9600
DATA BITS	7, 8 bits	BITS := 8
PARITY	O, E, N	PARITY := N
STOP BITS	1, 2 bits	STOP := 1
HDWR HANDSHAKING	Y, N	RTSCTS := N
PORT TIMEOUT	0–30 min	T_OUT := 5
SEND AUTOMESSAGE	Y, N	AUTO := N
FAST OP MESSAGES	Y, N	FASTOP := N
MODBUS SLAVE ID	1–247	SLAVEID := 1

Set the speed, data bits, parity, and stop bits settings to match the serial port configuration of the equipment that is communicating with the serial port.

After PORT TIMEOUT minutes of inactivity on a serial port at Access Level 2, the port automatically returns to Access Level 0. This security feature helps prevent unauthorized access to the relay settings if the relay is accidentally left in Access Level 2. If you do not want the port to time out, set PORT TIMEOUT equal to 0 minutes.

Set PROTO := SEL (standard SEL ASCII protocol), MOD (Modbus RTU protocol), or one of the MIRRORED BITS protocols, as needed for your application. For detailed information, refer to *Section 4: Protection and Logic Functions*, *Appendix E: Modbus Communications*, and *Appendix G: MIRRORED BITS Communications*.

Use the MBT option if you are using a Pulsar MBT9600 baud modem (see *Appendix G: MIRRORED BITS Communications* for more information). With this option set, the relay transmits a message every second processing interval and the device deasserts the RTS signal on the EIA-232 connector. Also, the device monitors the CTS signal on the EIA-232 connector, which the modem deasserts if the channel has too many errors. The modem uses the device RTS signal to determine whether the MB or MB8 MIRRORED BITS protocol is in use.

Set the AUTO := Y to allow automatic messages at a serial port.

The EIA-232 serial ports of the relay support software (XON/XOFF) flow control. If you want to enable support for hardware (RTS/CTS) flow control, set the RTSCTS setting equal to Y.

Set FASTOP := Y to enable binary Fast Operate messages at the serial port. Set FASTOP := N to block binary Fast Operate messages. Refer to *Appendix C: SEL Communications Processors* for the description of the SEL-2664S Fast Operate commands.

Report Settings (SET R Command)

The report settings use Relay Word bits for the SER and *Table 4.26*. See *Appendix H: Relay Word Bits* for detail. Refer to *Section 9: Analyzing Events* for additional information about SER and event reports.

SER Chatter Criteria

The SER includes an automatic deletion and reinsertion function to prevent overfilling of the SER buffer with chattering information. Each processing interval, the SEL-2664S checks the Relay Word bits in the four SER reports for any changes of state. When detecting a change of state, the SEL-2664S adds a record to the SER report containing the Relay Word bit(s), new state, time stamp, and checksum (see *Section 9: Analyzing Events* for more information).

When detecting oscillating SER items, the SEL-2664S automatically deletes these oscillating items from SER recording. *Table 4.25* shows the auto-removal settings.

Table 4.25 Auto-Removal Settings

Settings Prompt	Setting Range	Factory Default
Auto-Removal Enable	Y, N	ESERDEL := N
Number of Counts	2–20 counts	SRDLCNT := 5
Removal Time	0.1–90.0 seconds	SRDLTIM := 1.0

To use the automatic deletion and reinsertion function, proceed with the following steps:

Step 1. Set Report setting ESERDEL (enable SER delete) to Y to enable this function.

Step 2. Select values for the setting SRDLCNT (SER delete count) and the setting SRDLTIM (SER delete time) that mask the chattering SER element.

Setting SRDLTIM declares a time interval during which the SEL-2664S qualifies an input by comparing the changes of state of each input against the SRDLCNT setting. When an item changes state more than SRDLCNT times in an SRDLTIM interval, the SEL-2664S automatically removes these Relay Word bits from SER recording. Once deleted from recording, the items are ignored for the next nine intervals. At the ninth interval, the chatter criteria is again checked and, if the point does not exceed the criteria, it is automatically reinserted into recording at the starting of the tenth interval. You can enable or disable the autodeletion function via the SER settings. Any autodeletion notice entry is lost during changes of settings. The deleted items can be viewed in the SER Delete Report (command **SER D**—refer to *Section 7: Communications* for additional information).

SER Trigger Lists

Table 4.26 SER[a] Trigger Settings

Setting Prompt	Setting Name := Factory Default
SER1	SER1 := E64S 64S1 64S1T 64S2 64S2T AMP_ON AMP_LO SHUTDOWN EN_RETRY CNT_FULL 59N1 59N1T 59NRMS 59NRMST 64F1 64F1T 64F2 64F2T 64FFLT LOW_ISRC OUT_OPEN DCSW_STS VN3HIGH
SER2	SER2 := TR TRIP ULTRIP TRGTR RSTTRGT OUT01 OUT02 OUT03 OUT04 IN01 IN02 WARNING
SER3	SER3 := NGRSHORT NGROPEN HALARM HALARML SALARM IRIGOK IN_CLIP
SER4	SER4 := NA

[a] Use as many as 24 Relay Word elements separated by spaces or commas for each setting.

Relay Word Bit Aliases

To simplify your review of the information displayed in the SER record, the relay provides the Alias setting function. Using the Alias settings, you can change the way the relay elements listed in the previous SER settings are displayed in the SER report. In addition, the Alias settings allow you to change the text displayed when a particular element is asserted and deasserted. The relay permits as many as 20 unique aliases, as defined by the Enable Alias Settings (EALIAS) setting. The factory-default alias settings are shown in *Table 4.27*.

Table 4.27 Enable Alias Settings

Setting Prompt	Setting Range	Setting Name := Factory Default
Enable ALIAS (N, 1–20)	N, 1–20	EALIAS = 10

Define the enabled alias settings by entering the Relay Word bit name, a space, the required alias, a space, the text to display when the condition asserts, a space, and the text to display when the condition deasserts.

```
ALIAS1 = E64S 64S_ELEMENT ENABLED DISABLED
```

See *Table H.1* for the complete list of Relay Word bits. Use as many as 15 characters to define the alias, asserted text, and deasserted text strings. You can use capital letters (A–Z), numbers (0–9), and the underscore character (_) within each string. Do not attempt to use a space within a string because the relay will interpret a space as the break between two strings. If you wish to clear a string, simply type **NA.**

Table 4.28 SET R SER Alias Settings (Sheet 1 of 2)

Setting Prompt	Relay Word Bit	Alias	Asserted Text	Deasserted Text
ALIAS1 :=	E64S	64S_ELEMENT	ENABLED	DISABLED
ALIAS2 :=	AMP_ON	AMPLIFIER	ENABLED	DISABLED
ALIAS3 :=	AMP_LO	AMP_LOCKOUT	YES	NO
ALIAS4 :=	SHUTDOWN	AMP_SHUTDOWN	YES	NO
ALIAS5 :=	EN_RETRY	AMP_RETRY	ACTIVE	RESET

Table 4.28 SET R SER Alias Settings (Sheet 2 of 2)

Setting Prompt	Relay Word Bit	Alias	Asserted Text	Deasserted Text
ALIAS6 :=	CNT_FULL	AMP_RETRY_COUNT	FULL	NOT_FULL
ALIAS7 :=	LOW_ISRC	INJCT_CURRENT	LOW	NORMAL
ALIAS8 :=	OUT_OPEN	INJCT_TERMINALS	OPEN	OK
ALIAS9 :=	DCSW_STS	AMP_DC_SWITCH	OPEN	CLOSE
ALIAS10 :=	IN_CLIP	NEUT _CURR_CLIP	YES	NO
ALIAS11–ALIAS20 := NA				

Event Report Settings

Event reports have a fixed duration. Event reports are captured as 180-cycle events with 120 cycles of pre-fault data (see *Section 9: Analyzing Events*). The relay can typically hold at least fifteen 180-cycle event reports. Any additional event report captures will result in the oldest event report being deleted.

Table 4.29 Event Report Settings

Setting Prompt	Setting Range	Setting Name := Factory Default
EVENT TRIGGER	SELOGIC	ER := 0

Profile Report Settings

Use the PROFLIST setting to declare the analog quantities you want included in the Profile Report. Enter as many as 17 analog quantities, separated by spaces or commas, into PROFLIST setting. See *Appendix I: Analog Quantities* for a list of the available analog quantities. Also set the PROFAR to the necessary acquisition rate for the report.

IMPORTANT: All stored load data are lost when changing the PROFLIST.

Table 4.30 Profile Report Settings

Setting Prompt	Setting Range	Setting Name := Factory Default
PROFLIST	0, as many as 17 analog quantities	PROFLIST := INS_RES INS_CAP VN3_MAG VN_RMS IN3_MAG IN_RMS MES_NGR I_SRC INS_RES1 INS_RES2 INS_RES3 INS_RES4
PROFILE ACQ RATE	0.1, 1, 5, 15, 30, 60 min	PROFAR := 1

DNP Map Settings (Set DNP n Command, n = 1, 2, or 3)

Table 4.31 shows the DNP settings available in the SEL-2664S. See *Appendix D: DNP3 Communications* for additional details.

Table 4.31 DNP Map Settings[a]

Setting Prompt	Setting Range	Setting Name := Factory Default
DNP Binary Label Name	10 characters	BI_00 := ENABLED BI_01 := TRIP BI_02 := STWARN BI_03 := STFAIL BI_04 := STSET BI_05 := IN01 BI_06 := IN02 BI_07 := NA
DNP Binary Output Label Name		BO_00 := RB01 BO_01 := RB02 BO_02 := RB03 BO_03 := RB04 BO_04 := RB05 BO_05 := RB06 BO_06 := RB07 BO_07 := RB08 BO_08 := NA
DNP Analog Input Label Name	24 characters	AI_00 := INS_RES AI_01 := INS_CAP AI_02 := MES_NGR AI_03 := VN1_MAG AI_04 := VN3_MAG AI_05 := VN_RMS AI_06 := I_SRC AI_07 := VNF1_MAG AI_08 := INF1_MAG AI_09 := INS_RES1 AI_10 := VNF2_MAG AI_11 := INF2_MAG AI_12 := INS_RES2 AI_13 := VNF3_MAG AI_14 := INF3_MAG AI_15 := INS_RES3 AI_16 := VNF4_MAG AI_17 := INF4_MAG AI_18 := INS_RES4 AI_19 := NA
DNP Analog Output Label Name	6 characters	AO_00 := NA
DNP Counter Label Name	11 characters	CO_00 := NA

[a] See *Appendix D: DNP3 Communications* for a complete list of the DNP Map Labels and factory-default settings.

Modbus Map Settings (SET M Command)

Modbus User Map

Table 4.31 shows the available settings. See *Appendix E: Modbus Communications* for additional details.

Table 4.32 User Map Register Settings[a]

Setting Prompt	Setting Range	Setting Name := Factory Default
USER REG#1	NA, 1 Modbus Register Label	MOD_001 := NA
⋮	⋮	⋮
USER REG#125	NA, 1 Modbus Register Label	MOD_125 := NA

[a] See *Appendix E: Modbus Communications* for Modbus Register Labels and factory-default settings.

SECTION 5

Metering and Monitoring

Overview

The SEL-2664S includes a metering function to display the present values of current, voltage, stator insulation resistance measurements and, with the external SEL-2664, field insulation resistance measurements. The relay provides the following methods to read the present meter values:

- EIA-232 serial ports (using SEL ASCII text commands or ACSELERATOR QuickSet® SEL-5030 Software)
- Telnet via the Ethernet port
- Modbus® via the EIA-232 port
- Modbus TCP via the Ethernet port
- DNP3 Serial via the EIA-232 port
- DNP3 LAN/WAN via the Ethernet port
- IEC 61850 via the Ethernet port

Profile report monitoring is available using the Access Level 1 **LDP** command. The relay automatically records as many as 17 quantities (selected from the analog quantities) every 0.1, 1, 5, 15, 30, or 60 minutes. The data are stored in nonvolatile memory. At least 9800 time samples are stored.

Metering Function

The SEL-2664S provides metering for neutral voltage and current. The relay also meters injection source currents and voltages, stator insulation resistance, and capacitance and neutral ground resistance (NGR). The relay also meters field insulation resistance when used with the SEL-2664. Refer to *Table 5.1* for detailed descriptions.

Table 5.1 Metered Quantities (Sheet 1 of 2)

Quantities	Description
Stator Insulation (kΩ)	Resistance of the stator insulation to ground at the injected frequencies in kilohms, primary
Stator Insulation[a] (uF)	Capacitance of the stator insulation to ground in microfarads, primary
Neutral Ground Resistor (Ω)	Resistance of the neutral grounding resistor in ohms (secondary or primary based on NGR location)[b]
Field Insulation (kΩ)	Resistance of field insulation to ground in kilohms
Neutral Voltage (V sec)	Magnitude of fundamental, third-harmonic, and rms neutral voltage in secondary volts
Neutral Current (A sec)[c]	RMS and third-harmonic magnitudes of neutral currents in secondary amperes
Neutral Current (A pri)[c]	RMS and third-harmonic magnitudes of neutral currents in primary amperes
Injected Current (A sec)[c]	RMS magnitude of injected current in secondary amperes

Table 5.1 Metered Quantities (Sheet 2 of 2)

Quantities	Description
Injected Voltages (V at NGR Tap)	Voltage magnitude of specific frequency at the NGR Tap
Neutral Currents (A sec)	Magnitude of neutral currents at the injected frequencies in secondary amperes

[a] Stator Insulation Capacitance measurements are applicable only when no faults are present.
[b] The meter report always displays the full-scale NGR value irrespective of the Tap setting (NGR_TAP).
[c] Secondary and Primary reference the Neutral Grounding Transformer (NGT), not CTN.

NOTE: The SEL-2664S uses the nominal frequency (setting FNOM) for the fundamental frequency when measuring the voltage and current. The neutral voltages reflect the NGT secondary side unless noted "at NGR Tap".

```
=>>MET <Enter>

SEL-2664S                                Date: 01/16/2019   Time: 13:04:14.955
STATOR GND RELAY                         Time Source: External

                              RESISTANCE
Stator Insulation (kOhm)          99.99

                              CAPACITANCE
Stator Insulation (uF)             0.003

                              RESISTANCE
Neutral Ground Resistor (Ohm)      9.75

                              RMS AT NGR TAP   3RD HARMONIC        FUNDAMENTAL
Neutral Voltage (V sec)        3.42                0.14              0.00

                              RMS              3RD HARMONIC
Neutral Current (A sec)        0.034               0.003

                              RMS              3RD HARMONIC
Neutral Current (A pri)        0.000               0.000

                              RMS
Injected Current (A sec)       0.498

                                    18HZ       24HZ       36HZ       48HZ
Injected Voltages (V at NGR Tap)     1.721      1.713      1.703      1.683
Neutral Currents (A sec)             0.009      0.012      0.018      0.024
Stator Insulation (kOhm)            99.990     99.990     99.990     99.990

=>>
```

Figure 5.1 MET Command Response

Math Variable Metering

The SEL-2664S includes eight math variables. When you receive your SEL-2664S, no math variables are enabled. To use the math variables, enable the number of math variables (between one and eight) you need, using the EMV setting in the Logic setting category. *Figure 5.2* shows the device response to the **METER MV M**(ath) **V**(ariable) command with four of the eight math variables enabled.

```
=>>MET MV <Enter>

SEL-2664S                                Date: 11/08/2013   Time: 07:39:27.335
STATOR GND RELAY                         Time Source: Internal

MV01          8.64
MV02          8.31
MV03          7.72
MV04          7.12
=>>
```

Figure 5.2 MET MV Command Response

Profile Report Monitoring

The SEL-2664S includes a profile report monitoring function. The relay automatically records selected quantities into nonvolatile memory every 0.1, 1, 5, 15, 30, or 60 minutes, depending on the PROFAR profile report setting (see *Profile Report Settings* on page 4.36). Choose which analog quantities you want to monitor from the analog quantities listed in *Appendix I: Analog Quantities*. Set these quantities into the PROFLIST profile list report setting.

Examples of analog quantities available include the following:

- Stator insulation resistance
- Injected rms current
- Neutral ground resistance
- Third-harmonic neutral voltage
- Math Variables (see *Table 4.14*)

When used with the SEL-2664, the relay can also record the field insulation resistance.

The relay memory can hold at least 9800 time-stamped entries regardless of the number of analog quantities (as many as 17 analog quantities). For example, if you chose to monitor analog values at a rate of every 15 minutes, you could store 102 days and 2 hours worth of data (as many as 17 different analog quantities). Once the buffer is full, the next entry overwrites the earliest entry and so on.

Download the profile report data using the serial port **LDP** command described in *LDP Command (Profile Report)* on page 7.26. See *Figure 5.3* for an example **LDP** serial port command response. The profile report is also available in compressed ASCII format using the serial port **CPRO** command described in *CPRO Command (Compressed Profile Report)* on page 7.20. You can open the CPRO file in SEL-5601-2 SYNCHROWAVE Event Software. See *Figure 5.4* for an example CPRO serial port response and SYNCHROWAVE software display.

```
=>>LDP <Enter>

SEL-2664S                                   Date: 01/09/2019   Time: 10:37:15.844
STATOR GND RELAY                            Time Source: External

#   DATE        TIME          INS_RES  INS_CAP  I_SRC  VN3_MAG  VN_RMS  IN3_MAG  IN_RMS  MES_NGR  INS_RES1 INS_RES2 INS_RES3
    INS_RES4
10  01/09/2019  10:27:32.591  99.990    0.449   0.500   0.097    0.510   0.003    0.039   6.034    99.990   99.990   99.990   99.990
9   01/09/2019  10:28:32.652  99.990    0.449   0.500   0.096    0.510   0.003    0.039   6.034    99.990   99.990   99.990   99.990
8   01/09/2019  10:29:32.604  99.990    0.449   0.500   0.094    0.510   0.003    0.039   6.033    99.990   99.990   99.990   99.990
7   01/09/2019  10:30:32.591  99.990    0.449   0.500   0.091    0.510   0.003    0.039   6.032    99.990   99.990   99.990   99.990
6   01/09/2019  10:31:32.625  99.990    0.449   0.500   0.095    0.510   0.003    0.039   6.033    99.990   99.990   99.990   99.990
5   01/09/2019  10:32:32.649  99.990    0.448   0.500   0.098    0.510   0.003    0.039   6.034    99.990   99.990   99.990   99.990
4   01/09/2019  10:33:32.581  99.990    0.448   0.500   0.095    0.510   0.003    0.039   6.033    99.990   99.990   99.990   99.990
3   01/09/2019  10:34:32.652  99.990    0.450   0.500   0.094    0.510   0.003    0.039   6.033    99.990   99.990   99.990   99.990
2   01/09/2019  10:35:32.655  99.990    0.450   0.500   0.104    0.510   0.003    0.039   6.036    99.990   99.990   99.990   99.990
1   01/09/2019  10:36:32.607  99.990    0.449   0.500   0.094    0.510   0.003    0.039   6.034    99.990   99.990   99.990   99.990

=>>
```

Figure 5.3 LDP Command Response

```
=>>CPRO <Enter>
"FID","0143"
"FID=SEL-2664S-X273-V0-Z003002-D20220131","0932"
"MONTH","DAY","YEAR","HOUR","MIN","SEC","MSEC","0ACA"
2,11,2022,10,47,56,202,"0459"
"NUM_CH_A","NUM_CH_D","SAM/CYC_A","SAM/CYC_D","NUM_OF_CYC","FREQ","PRIM_VAL","13F2"
8,0,4,4,44.500,0.00027778,"NO","060D"
"INS_RES(kOhm)","INS_CAP(uF)","I_SRC(A)","VN3_MAG(V)","VN_RMS(V)","IN3_MAG(A)","IN_
   RMS(A)","MES_NGR(Ohm)","TRIG","","1587"
99.990,0.439,0.499,0.015,0.529,0.002,0.047,1.039, ,"","0A36"
99.990,0.440,0.499,0.015,0.529,0.002,0.047,1.039, ,"","0A2E"
.
.
99.990,0.440,0.499,0.016,0.529,0.002,0.047,1.040, ,"","0A27"
99.990,0.440,0.499,0.015,0.529,0.002,0.047,1.039,">","","0A90"
=>>
```

Figure 5.4 CPRO Command Response

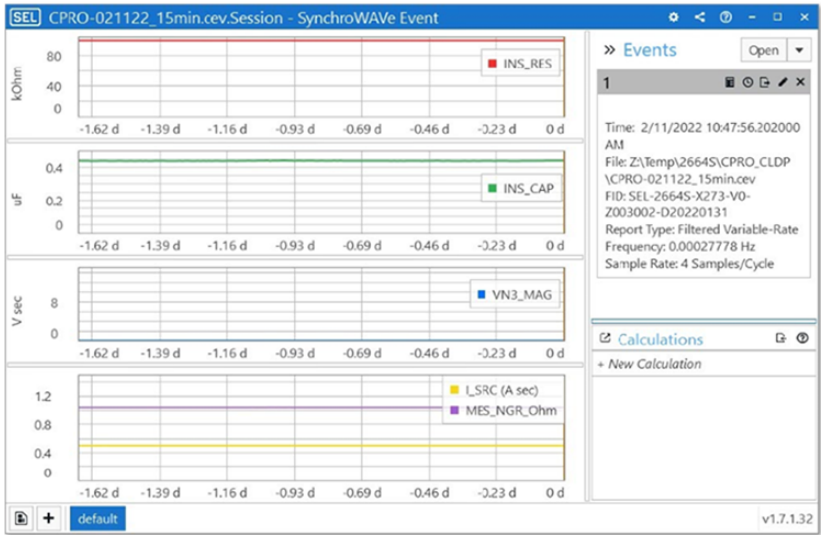

NOTE: The data in Trigger row (>) correspond to last data saved, which can be up to PROFAR minutes prior to the report retrieval time.

NOTE: Horizontal axis times are calculated from the trigger row time and PROFAR setting only, e.g., not adjusted for relay control power interruption, etc.

NOTE: Data in the report are periodic with 1 Cycle = 60 minutes (the maximum value of setting PROFAR).

Therefore, the frequency (Hz) = 1/(60*60) = 0.00027778 "Hour/Sec" and
Sample Rate (Samples/Cycle) = 60/PROFAR [e.g., = 4 samples/hour for PROFAR = 15 minutes]

Figure 5.5 SynchroWAVe Display of CPRO Report

SECTION 6

Settings

Overview

The SEL-2664S stores the settings you enter in nonvolatile memory. Settings are divided into the following six setting classes:

1. Relay Group
2. Logic Group
3. Port *p* (where *p* = F, 1 [Ethernet], 2, or 3)
4. Report
5. Modbus
6. DNP3

Some setting classes have multiple instances. In the previous list, there are four port setting instances, one for each port. Settings can be viewed or set in several ways, as shown in *Table 6.1*.

Table 6.1 Methods of Accessing Settings

	Serial Port Commands[a]	ACSELERATOR QuickSet SEL-5030 Software[b]
Display Settings	All settings (**SHO** command)	All settings
Change Settings	All settings (**SET** command)	All settings

[a] Refer to *Section 7: Communications* for detailed information on set-up and use of the serial communications port and Ethernet port.

[b] Refer to *Section 3: PC Software* for detailed information.

Setting entry error messages, together with corrective actions, are also presented in this section to assist in correct settings entry.

The *SEL-2664S Settings Sheets* at the end of this section list all SEL-2664S settings, the setting definitions, and input ranges. Refer to *Section 4: Protection and Logic Functions* for detailed information on individual elements and settings.

View/Change Settings Over Communications Port

Refer to *Section 7: Communications* for information on how to set up and access the relay serial or Ethernet port with a personal computer and how to use ASCII commands to communicate with the relay.

View Settings

Use the **SHOW** command to view relay settings. The **SHOW** command is available from Access Level 1 and Access Level 2. *Table 6.2* lists the **SHOW** command options.

Table 6.2 SHOW Command Options

Command	Description
SHOW	Shows relay group settings.
SHO L	Shows logic settings.
SHO P *n*	Shows serial port settings for PORT *n* (*n* = F, 1, 2, or 3)
SHO R	Shows Sequential Event Report (SER) and Event Report settings
SHO M	Shows Modbus settings
SHO D	Shows DNP3 map settings

You can append a setting name to each of the commands to specify the setting to display (e.g., **SHO I_SRC** displays the corresponding relay settings). If only the **SHO** command is given, all the relay settings for the corresponding class (e.g., Group) are shown.

Enter Settings

The **SET** command (available from Access Level 2) allows you to view or change settings. *Table 6.3* lists the **SET** command options.

Table 6.3 SET Command Options

Command	Settings Type	Description
SET	Relay	Protection elements, timers, etc.
SET L	Logic	SELOGIC control equations
SET P *n*	Port	Serial port settings for serial port *n* (1, 2, 3, or F)
SET R	Reports	SER and Event Report settings
SET M	Modbus	Modbus user map
SET D	DNP	DNP3 map settings

You can append a setting name to each of the commands to specify the first setting to display (e.g., **SET I_SRC** displays the relay settings starting with setting I_SRC). The default is the first setting.

NOTE: The **SET** command is not available for as long as 90 seconds after the relay is powered up and as long as 40 seconds after a setting change. If you issue a **SET** command during this period, the relay responds with the following message:

```
Command Unavailable;
Relay Configuration in
Progress, Try Again.
```

When you issue the **SET** command, the relay presents a list of settings one at a time. Enter a new setting or press **<Enter>** to accept the existing setting. Editing keystrokes are listed in *Table 6.4*.

Table 6.4 SET Command Editing Keystrokes

Press Key(s)	Results
<Enter>	Retains the setting and moves to the next setting.
^ <Enter>	Returns to the previous setting.
< <Enter>	Returns to the previous setting category.
> <Enter>	Moves to the next setting category.
END <Enter>	Exits the editing session, then prompts you to save the settings.
<Ctrl+X>	Aborts the editing session without saving changes.

The relay checks each entry to ensure that the entry is within the setting range. If it is not in range, an `Out of Range` message is generated, and the relay prompts you for the setting again.

When all the settings are entered, the relay displays the new settings and prompts you for approval to enable them. Press **Y <Enter>** to enable the new settings. The relay is disabled for as long as five seconds while it saves the new settings. The ALARM Relay Word bit is set momentarily, and the **ENABLED** LED extinguishes while the relay is disabled. To change a specific setting, enter the command shown in *Table 6.5*.

Table 6.5 SET Command Format

SET n m s TERSE	
where:	
n	is left blank or is L, R, M, D, or P to identify the class of settings.
m	is left blank or is F, 1, 2, or 3 when *n* = P.
s	is the name of the specific setting you wish to jump to and begin setting. If *s* is not entered, the relay starts at the first setting (e.g., enter **I_SRC** to start at the injection source current level setting).
TERSE	instructs the relay to skip the settings display after the last setting. Use this parameter to speed up the **SET** command. If you wish to review the settings before saving, do not use the **TERSE** option.

Setting Entry Error Message

As you enter relay settings, the relay checks the setting entered against the range for the setting as published on the relay setting sheet. If any setting entered falls outside the corresponding range for that setting, the relay immediately responds `Out of RSEL-2664S Relayange` and prompts you to reenter the setting.

SEL-2664S Settings Sheets

These settings sheets include the definition and input range for each setting in the relay. You can access the settings from the communications ports. See *Section 4: Protection and Logic Functions* in the instruction manual for detailed descriptions of the settings. The settings are not case sensitive.

Global Settings (SET Command)

Identifier

UNIT ID LINE 1
Range: 16 Characters

RID := _____
Factory-Default Setting: SEL-2664S

UNIT ID LINE 2
Range: 16 Characters

TID := _____
Factory-Default Setting: STATOR GND RELAY

Configuration

Rated Frequency
Range: 50, 60 Hz

FNOM := _____
Factory-Default Setting: 60

Injection Source Current
Range: 0.5–5.0 A

I_SRC := _____
Factory-Default Setting: 2.5

Injection Source Mode
Range: NORM, P1, P2, P_LOGIC

MODE_SRC := _____
Factory-Default Setting: NORM

Neutral Ground Xfmr Ratio
Range: 1.00–300.00

NGT_RAT := _____
Factory-Default Setting: 120.00

Neutral Ground Resistor Location
Range: SEC, PRIM

NGR_LOC := _____
Factory-Default Setting: SEC

NGR Signal Injection Tap
Range: 10.0%–100.0%
(Forced to 100% and hidden if NGR_LOC = PRIM)

NGR_TAP := _____
Factory-Default Setting: 100.0

Neutral Ground Resistor Value
Range: OFF, 0.100–4000.000

NGR_VAL := _____
Factory-Default Setting: 1.000

Neutral CT Location
Range: SEC, PRIM (if NGR_LOC := SEC)
(Forced to PRIM and hidden if NGR_LOC = PRIM)

CTN_LOC := _____
Factory-Default Setting: SEC

Neutral CT Ratio
Range: 10.0–5000.0

CTN_RAT := _____
Factory-Default Setting: 1000.0

Date Format
Range: MDY, YMD, DMY

DATE_F := _____
Factory-Default Setting: MDY

Stator Ground 64S

Enable 64S Elements (SELOGIC) **E64S :=** _____
Factory-Default Setting: IN01

64S Level 1 Pickup **64S1P :=** _____
Range: OFF, 0.1–10.0 kOhm
Factory-Default Setting: OFF

64S Level 1 Delay **64S1D :=** _____
Range: 0.1–400.0 s
Hidden When: 64S1P := OFF
Factory-Default Setting: 20.0

64S Level 1 Torque Control (SELOGIC) **64S1TC :=** _____
Hidden When: 64S1P := OFF
Factory-Default Setting: NOT LOW_ISRC

64S Level 2 Pickup **64S2P :=** _____
Range: OFF, 0.1–10.0 kOhm
Factory-Default Setting: OFF

64S Level 2 Delay **64S2D :=** _____
Range: 0.1–400.0 s
Hidden When: 64S2P := OFF
Factory-Default Setting: 10.0

64S Level 2 Torque Control (SELOGIC) **64S2TC :=** _____
Hidden When: 64S2P := OFF
Factory-Default Setting: NOT LOW_ISRC

VFD Start in Progress (SELOGIC) **VFD_STRT :=** _____
Factory-Default Setting: 0

P MODE Logic Bit1 (SELOGIC) **P_LOGIC1 :=** _____
Factory-Default Setting: 0

P MODE Logic Bit2 (SELOGIC) **P_LOGIC2 :=** _____
Factory-Default Setting: 0

Stator Ground 59N

59N1 Pickup **59N1P :=** _____
Range: OFF, 2.5–150.0 V
Factory-Default Setting: 10.0

59N1 Delay **59N1D :=** _____
Range: 0.1–400.0 s
Hidden When: 59N1P := OFF
Factory-Default Setting: 1.0

59N1 Torque Control (SELOGIC) **59N1TC :=** _____
Hidden When: 59N1P := OFF
Factory-Default Setting: 1

59N RMS Pickup **59NRMSP :=** _____
Range: OFF, 2.5–150.0 V
Factory-Default Setting: 15.0

59N RMS Delay **59NRMSD :=** _____
Range: 0.1–400.0 s
Hidden When: 59NRMSP := OFF
Factory-Default Setting: 15.0

59N RMS Torque Control (SELOGIC) **59NRMSTC :=** _____
Hidden When: 59NRMSP := OFF
Factory-Default Setting: 1

Neutral Ground Resistor (NGR)

NGR Short Pickup **SHORT_P :=** _____
Range: OFF, 0.01–4000 Ohm
Factory-Default Setting: OFF

NGR Open Pickup **OPEN_P :=** _____
Range: OFF, 0.1–4000 Ohm
Factory-Default Setting: OFF

Rotor Ground 64F

Enable 64F Elements **E64F :=** _____
Range: Y, N
Factory-Default Setting: N

64F Level 1 Pickup **64F1P :=** _____
Range: OFF, 0.5–200.0 kOhm
Hidden When: E64F := N
Factory-Default Setting: OFF

64F Level 1 Delay **64F1D :=** _____
Range: 0.1–400.0 s
Hidden When: E64F := N or when 64F1P := OFF
Factory-Default Setting: 60.0

64F Level 1 Torque Control (SELOGIC) **64F1TC :=** _____
Hidden When: E64F := N or when 64F1P := OFF
Factory-Default Setting: 1

64F Level 2 Pickup **64F2P :=** _____
Range: OFF, 0.5–200.0 kOhm
Hidden When: E64F := N
Factory-Default Setting: OFF

64F Level 2 Delay **64F2D :=** _____
Range: 0.1–400.0 s
Hidden When: E64F := N or when 64F2P := OFF
Factory-Default Setting: 60.0

64F Level 2 Torque Control (SELOGIC) **64F2TC :=** _____
Hidden When: E64F := N or when 64F2P := OFF
Factory-Default Setting: 1

Trip Logic

Minimum Trip Duration **TDURD :=** _____
Range: 0.0-400.0 s
Factory-Default Setting: 0.1

Protection Trip Equation (SELOGIC) **TR :=** _____
Factory-Default Setting: 64S1T OR 64F1T OR 59N1T OR 59NRMST

Unlatch Trip Equation (SELOGIC) **ULTRIP :=** _____
Factory-Default Setting: NOT TR

Warning Equation (SELOGIC) **WARNING :=** _____
Factory-Default Setting: 64S2T OR 64F2T OR NOT E64S OR NGROPEN OR NGRSHORT OR CTN_OPEN OR AMP_LO

Output

OUT01 Fail-Safe **OUT01FS :=** _____
Range: Y, N
Factory-Default Setting: Y

OUT01 (SELOGIC) **OUT01 :=** _____
Factory-Default Setting: HALARM OR SALARM

OUT02 Fail-Safe **OUT02FS :=** _____
Range: Y, N
Factory-Default Setting: N

OUT02 (SELOGIC) **OUT02 :=** _____
Factory-Default Setting: TRIP

OUT03 Fail-Safe **OUT03FS :=** _____
Range: Y, N
Factory-Default Setting: N

OUT03 (SELOGIC) **OUT03 :=** _____
Factory-Default Setting: WARNING

OUT04 Fail-Safe **OUT04FS :=** _____
Range: Y, N
Factory-Default Setting: N

OUT04 (SELOGIC) **OUT04 :=** _____
Factory-Default Setting: 0

Time and Date Management

IRIG Time Source **TIME_SRC :=** _____
Range: IRIG1, IRIG2
Factory-Default Setting: IRIG1

IRIG Control Bit Definition **IRIGC :=** _____
Range: None, C37.118
Factory-Default Setting: None

Offset From UTC **UTC_OFF :=** _____
Range: –24.00 to 24.00 hours
Factory-Default Setting: 0.00

Month To Begin DST **DST_BEGM :=** _____
Range: OFF, 1–12
Factory-Default Setting: OFF

Week of the Month To Begin DST **DST_BEGW :=** _____
Range: 1–3, L
Factory-Default Setting: 2

Day of the Week To Begin DST **DST_BEGD :=** _____
Range: SUN–SAT
Factory-Default Setting: SUN

Local Hour To Begin DST **DST_BEGH :=** _____
Range: 0–23
Factory-Default Setting: 2

Month To End DST **DST_ENDM :=** _____
Range: 1–12
Factory-Default Setting: 11

Week of the Month To End DST **DST_ENDW :=** _____
Range: 1–3, L
Factory-Default Setting: 1

Day of the Week To End DST **DST_ENDD :=** _____
Range: SUN–SAT
Factory-Default Setting: SUN

Local Hour To End DST **DST_ENDH :=** _____
Range: 0–23
Factory-Default Setting: 2

Data Reset

Reset Targets (SELOGIC) **RSTTRGT :=** _____
Factory-Default Setting: 0

Logic Settings (SET L Command)

SELOGIC Enables

Range: N, 1–8
Factory-Default Setting: All default Logic Settings are either N, NA, or OFF).

SELOGIC LATCHES **ELAT :=** _____
Range: N, 1–8
Factory-Default Setting: N

SV/TIMERS **ESV :=** _____
Range: N, 1–8
Factory-Default Setting: N

SELOGIC COUNTERS **ESC :=** _____
Range: N, 1–8
Factory-Default Setting: N

MATH VARIABLES **EMV :=** _____
Range: N, 1–8
Factory-Default Setting: N

Latch Bits Equations

Factory-Default Setting: NA

SET01 := _____

RST01 := _____

SET02 := _____

RST02 := _____

SET03 := _____

RST03 := _____

SET04 := _____

RST04 := _____

SET05 := _____

RST05 := _____

SET06 := _____

RST06 := _____

SET07 := _____

RST07 := _____

SET08 := _____

RST08 := _____

SELOGIC Variable Timers

Range: 0.00–3000.00 s (for all SV*nn*PU and SV*nn*DO timer settings)
Factory-Default Setting: 0.00 (for all SV*nn*PU and SV*nn*DO timer settings)
Factory-Default Setting: NA (for all SELOGIC settings)

SV TIMER PICKUP **SV01PU :=** _____

SV TIMER DROPOUT **SV01DO :=** _____

SV INPUT (SELOGIC) **SV01 :=** _____

SV TIMER PICKUP **SV02PU :=** _____

SV TIMER DROPOUT **SV02DO :=** _____

SV INPUT (SELOGIC) **SV02 :=** _____

SV TIMER PICKUP **SV03PU :=** _____

SV TIMER DROPOUT **SV03DO :=** _____

Range: 0.00–3000.00 s (for all SV*nn*PU and SV*nn*DO timer settings)
Factory-Default Setting: 0.00 (for all SV*nn*PU and SV*nn*DO timer settings)
Factory-Default Setting: NA (for all SELOGIC settings)

SV INPUT (SELOGIC) **SV03 :=** _____

SV TIMER PICKUP **SV04PU :=** _____

SV TIMER DROPOUT **SV04DO :=** _____

SV INPUT (SELOGIC) **SV04 :=** _____

SV TIMER PICKUP **SV05PU :=** _____

SV TIMER DROPOUT **SV05DO :=** _____

SV INPUT (SELOGIC) **SV05 :=** _____

SV TIMER PICKUP **SV06PU :=** _____

SV TIMER DROPOUT **SV06DO :=** _____

SV INPUT (SELOGIC) **SV06 :=** _____

SV TIMER PICKUP **SV07PU :=** _____

SV TIMER DROPOUT **SV07DO :=** _____

SV INPUT (SELOGIC) **SV07 :=** _____

SV TIMER PICKUP **SV08PU :=** _____

SV TIMER DROPOUT **SV08DO :=** _____

SV INPUT (SELOGIC) **SV08 :=** _____

Counters Equations

Range: 1–65000 (for all SC*nn*PV counters)
Factory-Default Setting: OFF (for all SC*nn*PV counters)
Factory-Default Setting: NA (for all SELOGIC settings)

SC PRESET VALUE **SC01PV :=** _____

SC RESET INPUT (SELOGIC) **SC01R :=** _____

SC LOAD PV INPUT (SELOGIC) **SC01LD :=** _____

SC CNT UP INPUT (SELOGIC) **SC01CU :=** _____

SC CNT DN INPUT (SELOGIC) **SC01CD :=** _____

SC PRESET VALUE **SC02PV :=** _____

SC RESET INPUT (SELOGIC) **SC02R :=** _____

SC LOAD PV INPUT (SELOGIC) **SC02LD :=** _____

SC CNT UP INPUT (SELOGIC) **SC02CU :=** _____

SC CNT DN INPUT (SELOGIC) **SC02CD :=** _____

Range: 1–65000 (for all SC*nn*PV counters)
Factory-Default Setting: OFF (for all SC*nn*PV counters)
Factory-Default Setting: NA (for all SELOGIC settings)

SC PRESET VALUE	**SC03PV :=** _____
SC RESET INPUT (SELOGIC)	**SC03R :=** _____
SC LOAD PV INPUT (SELOGIC)	**SC03LD :=** _____
SC CNT UP INPUT (SELOGIC)	**SC03CU :=** _____
SC CNT DN INPUT (SELOGIC)	**SC03CD :=** _____
SC PRESET VALUE	**SC04PV :=** _____
SC RESET INPUT (SELOGIC)	**SC04R :=** _____
SC LOAD PV INPUT (SELOGIC)	**SC04LD :=** _____
SC CNT UP INPUT (SELOGIC)	**SC04CU :=** _____
SC CNT DN INPUT (SELOGIC)	**SC04CD :=** _____
SC PRESET VALUE	**SC05PV :=** _____
SC RESET INPUT (SELOGIC)	**SC05R :=** _____
SC LOAD PV INPUT (SELOGIC)	**SC05LD :=** _____
SC CNT UP INPUT (SELOGIC)	**SC05CU :=** _____
SC CNT DN INPUT (SELOGIC)	**SC05CD :=** _____
SC PRESET VALUE	**SC06PV :=** _____
SC RESET INPUT (SELOGIC)	**SC06R :=** _____
SC LOAD PV INPUT (SELOGIC)	**SC06LD :=** _____
SC CNT UP INPUT (SELOGIC)	**SC06CU :=** _____
SC CNT DN INPUT (SELOGIC)	**SC06CD :=** _____
SC PRESET VALUE	**SC07PV :=** _____
SC RESET INPUT (SELOGIC)	**SC07R :=** _____
SC LOAD PV INPUT (SELOGIC)	**SC07LD :=** _____
SC CNT UP INPUT (SELOGIC)	**SC07CU :=** _____
SC CNT DN INPUT (SELOGIC)	**SC07CD :=** _____
SC PRESET VALUE	**SC08PV :=** _____
SC RESET INPUT (SELOGIC)	**SC08R :=** _____
SC LOAD PV INPUT (SELOGIC)	**SC08LD :=** _____
SC CNT UP INPUT (SELOGIC)	**SC08CU :=** _____
SC CNT DN INPUT (SELOGIC)	**SC08CD :=** _____

Math Variables

MV01 := _____

MV02 := _____

MV03 := _____

MV04 := _____

MV05 := _____

MV06 := _____

MV07 := _____

MV08 := _____

Mirrored Bits Transmit SELogic Equations

Hidden When: PROTO is not MBxx on any of the communications ports

TMB1A := _____

TMB2A := _____

TMB3A := _____

TMB4A := _____

TMB5A := _____

TMB6A := _____

TMB7A := _____

TMB8A := _____

TMB1B := _____

TMB2B := _____

TMB3B := _____

TMB4B := _____

TMB5B := _____

TMB6B := _____

TMB7B := _____

TMB8B := _____

SET PORT p (p = F, 1, 2, or 3) Command

PORT F (EIA-232 Port)

(All Serial Port settings are hidden if EPORT := N)

ENABLE PORT
Range: Y, N
EPORT := _____
Factory-Default Setting: Y

Protocol Select

PROTOCOL (SEL)
PROTO := _____
Factory-Default Setting: SEL

Communications

SPEED
Range: 300, 1200, 2400, 4800, 9600, 19200, 38400 bps
SPEED := _____
Factory-Default Setting: 9600

DATA BITS
Range: 7, 8 bits
BITS := _____
Factory-Default Setting: 8

PARITY
Range: O, E, N
PARITY := _____
Factory-Default Setting: N

STOP BITS
Range: 1, 2 bits
STOP := _____
Factory-Default Setting: 1

HDWR HANDSHAKING
Range: Y, N
RTSCTS := _____
Factory-Default Setting: N

PORT TIME-OUT
Range: 0–30 min
T_OUT := _____
Factory-Default Setting: 5

SEND AUTOMESSAGE
Range: Y, N
AUTO := _____
Factory-Default Setting: N

PORT 1 (Fiber-Optic Ethernet Port)

(All Ethernet settings are hidden if an Ethernet option is not available or if EPORT := N. IP addresses are entered using zzz = 1–126, 128–223; yyy = 0–255; xxx = 0–255; www = 0–255)

ENABLE PORT
Range: Y, N
EPORT := _____
Factory-Default Setting: Y

IP ADDRESS (zzz.yyy.xxx.www)
IPADDR := _____
Factory-Default Setting: 192.168.1.2

SUBNET MASK (zzz.yyy.xxx.www)
SUBNETM := _____
Factory-Default Setting: 255.255.255.0

DEFAULT ROUTER (zzz.yyy.xxx.www)
(Note: Setting DEFRTR = 0.0.0.0 disables the default router)
DEFRTR := _____
Factory-Default Setting: 192.168.1.1

ENABLE TCP KEEP-ALIVE
Range: Y, N
ETCPKA := _____
Factory-Default Setting: Y

TCP KEEP-ALIVE IDLE RANGE
Range: 1–20 s
Hidden When: ETCPKA := N
KAIDLE := _____
Factory-Default Setting: 10

TCP KEEP-ALIVE INTERVAL RANGE
Range: 1–20 s
Hidden When: ETCPKA := N
KAINTV := _____
Factory-Default Setting: 1

TCP KEEP-ALIVE COUNT RANGE — **KACNT :=** _____
Range: 1–20 s
Hidden When: ETCPKA := N
Factory-Default Setting: 6

FAST OP MESSAGES — **FASTOP :=** _____
Range: Y, N
Factory-Default Setting: N

OPERATING MODE — **NETMODE :=** _____
Range: FIXED, FAILOVER, SWITCHED
Factory-Default Setting: FAILOVER

FAILOVER TIMEOUT — **FTIME :=** _____
Range: 0.10–65.00 s
Hidden When: NETMODE is not set to FAILOVER
Factory-Default Setting: 1.00

PRIMARY NETPORT — **NETPORT :=** _____
Range: A, B
Factory-Default Setting: A

NETWRK PORTA SPD — **NETASPD :=** _____
Range: AUTO, 10, 100 Mbps
Factory-Default Setting: AUTO

NETWRK PORTB SPD — **NETBSPD :=** _____
Range: AUTO, 10, 100 Mbps
Factory-Default Setting: AUTO

ENABLE TELNET — **ETELNET=** _____
Range: Y, N
Factory-Default Setting: Y

TELNET PORT — **TPORT :=** _____
Range: 23, 1025–65534
Factory-Default Setting: 23

TELNET TIME-OUT — **TIDLE :=** _____
Range: 1–30 min
Factory-Default Setting: 15

ENABLE FTP — **EFTPSERV=** _____
Range: Y, N
Factory-Default Setting: Y

FTP USER NAME — **FTPUSER :=** _____
Range: 20 characters
Factory-Default Setting: FTPUSER

ENABLE IEC 61850 PROTOCOL — **E61850 :=** _____
Range: Y, N
Factory-Default Setting: N

ENABLE IEC 61850 GSE — **EGSE :=** _____
Range: Y, N
Hidden When: E61850 := N
Factory-Default Setting: N

ENABLE MODBUS SESSIONS — **EMOD :=** _____
Range: 0–2
Factory-Default Setting: 0

MODBUS TCP PORT1 — **MODNUM1 :=** _____
Range: 1–65534
Hidden When: EMOD := 0
Factory-Default Setting: 502

MODBUS TCP PORT2 — **MODNUM2 :=** _____
Range: 1–65534
Hidden When: EMOD := 0 or 1
Factory-Default Setting: 502

MODBUS TIMEOUT 1 — **MTIMEO1 :=** _____
Range: 15–900 s
Hidden When: EMOD := 0
Factory-Default Setting: 15

MODBUS TIMEOUT 2 — **MTIMEO2 :=** _____
Range: 15–900 s
Hidden When: EMOD := 0 or 1
Factory-Default Setting: 15

** Exclude the following port numbers: 20 (FTP Data), 21 (FTP Control), TPORT setting, SNTP, and DNPNUM setting if present.*

DNP3 Protocol

All Settings Are Hidden When: EDNP := 0

ENABLE DNP SESSIONS **EDNP :=** _____
Range: 0–3
Factory-Default Setting: 0

DNP TCP AND UDP PORT **DNPNUM :=** _____
Range: 1–65534
Factory-Default Setting: 20000

DNP ADDRESS **DNPADR :=** _____
Range: 0–65519
Factory-Default Setting: 0

Session 1

(The DNP IP address of each session (DNPIP1, DNPIP2, etc.) must be unique.)

DNP Master IP ADDRESS (zzz.yyy.xxx.www) **DNPIP1 :=** _____
Range: 15 characters
Factory-Default Setting: 192.168.1.3

TRANSPORT PROTOCOL **DNPTR1 :=** _____
Range: UDP, TCP
Factory-Default Setting: TCP

UDP RESPONSE PORT **DNPUDP1 :=** _____
Range: REQ, 1–65534
Factory-Default Setting: 2000

DNP ADDRESS TO REPORT TO **REPADR1 :=** _____
Range: 0–65519
Factory-Default Setting: 1

DNP MAP **DNPMAP1 :=** _____
Range: 1–3
Factory-Default Setting: 1

ANALOG INPUT DEFAULT VARIATION **DVARAI1 :=** _____
Range: 1–6
Factory-Default Setting: 4

CLASS FOR BINARY EVENT DATA **ECLASSB1 :=** _____
Range: 0–3
Factory-Default Setting: 1

CLASS FOR COUNTER EVENT DATA **ECLASSC1 :=** _____
Range: 0–3
Factory-Default Setting: 0

CLASS FOR ANALOG EVENT DATA **ECLASSA1 :=** _____
Range: 0–3
Factory-Default Setting: 2

CURRENTS SCALING DECIMAL PLACES **DECPLA1 :=** _____
Range: 0–3
Factory-Default Setting: 1

VOLTAGES SCALING DECIMAL PLACES **DECPLV1 :=** _____
Range: 0–3
Factory-Default Setting: 1

MISC DATA SCALING DECIMAL PLACES **DECPLM1 :=** _____
Range: 0–3
Factory-Default Setting: 1

AMPERES REPORTING DEADBAND COUNTS **ANADBA1 :=** _____
Range: 0–32767
Hidden When: ECLASSA1 := 0
Factory-Default Setting: 100

VOLTS REPORTING DEADBAND COUNTS **ANADBV1 :=** _____
Range: 0–32767
Hidden When: ECLASSA1 := 0
Factory-Default Setting: 100

MISC DATA REPORTING DEADBAND COUNTS **ANADBM1 :=** _____
Range: 0–32767
Hidden When: ECLASSA1 := 0 and ECLASSC1 := 0
Factory-Default Setting: 100

MINUTES FOR REQUEST INTERVAL **TIMERQ1 :=** _____
Range: I, M, 1–32767
Factory-Default Setting: I

SELECT/OPERATE TIME-OUT **STIMEO1 :=** _____
Range: 0.0–30.0 Factory-Default Setting: 1.0

SEND DATA LINK HEARTBEAT **DNPINA1 :=** _____
Range: 0.0–7200 Factory-Default Setting: 120
Hidden When: DNPTR1 := UDP

DATA LINK RETRIES **DRETRY1 :=** _____
Range: 0–15 Factory-Default Setting: 0

DATA LINK TIME-OUT **DTIMEO1 :=** _____
Range: 0.0–5.0 s Factory-Default Setting: 1
Hidden When: DRETRY1 := 0

EVENT MESSAGE CONFIRM TIME-OUT **ETIMEO1 :=** _____
Range: 1–50 s Factory-Default Setting: 5

ENABLE UNSOLICITED REPORTING **UNSOL1 :=** _____
Range: Y, N Factory-Default Setting: N
Hidden When: ECLASSA1, ECLASSB1, or ECLASSC1 := 0,

ENABLE UNSOLICITED REPORTING AT POWER-UP **PUNSOL1 :=** _____
Range: Y, N Factory-Default Setting: N
Hidden When: UNSOL1 := N

NUMBER OF EVENTS TO TRANSMIT ON **NUMEVE1 :=** _____
Range: 1–200 Factory-Default Setting: 10
Hidden When: UNSOL1 := N

OLDEST EVENT ON TX ON **AGEEVE1 :=** _____
Range: 0.0–99999.0 s Factory-Default Setting: 2.0
Hidden When: UNSOL1 := N

UNSOLICITED MESSAGE MAX RETRY ATTEMPTS **URETRY1 :=** _____
Range: 2–10 Factory-Default Setting: 3
Hidden When: UNSOL1 := N

UNSOLICITED MESSAGE OFFLINE TIME-OUT **UTIMEO1 :=** _____
Range: 1–5000 s Factory-Default Setting: 60
Hidden When: UNSOL1 := N

Session 2

All Settings Are Hidden When: EDNP < 2

DNP Master IP ADDRESS (zzz.yyy.xxx.www) **DNPIP2 :=** _____
Range: 15 characters Factory-Default Setting: 192.168.1.4

TRANSPORT PROTOCOL **DNPTR2 :=** _____
Range: UDP, TCP Factory-Default Setting: TCP

UDP RESPONSE PORT **DNPUDP2 :=** _____
Range: REQ, 1–65534 Factory-Default Setting: 2000

DNP ADDRESS TO REPORT TO **REPADR2 :=** _____
Range: 0–65519 Factory-Default Setting: 1

DNP MAP **DNPMAP2 :=** _____
Range: 1–3 Factory-Default Setting: 1

ANALOG INPUT DEFAULT VARIATION **DVARAI2 :=** _____
Range: 1–6 Factory-Default Setting: 4

CLASS FOR BINARY EVENT DATA **ECLASSB2 :=** _____
Range: 0–3 Factory-Default Setting: 1

CLASS FOR COUNTER EVENT DATA
Range: 0–3
ECLASSC2 := _____
Factory-Default Setting: 0

CLASS FOR ANALOG EVENT DATA
Range: 0–3
ECLASSA2 := _____
Factory-Default Setting: 2

CURRENTS SCALING DECIMAL PLACES
Range: 0–3
DECPLA2 := _____
Factory-Default Setting: 1

VOLTAGES SCALING DECIMAL PLACES
Range: 0–3
DECPLV2 := _____
Factory-Default Setting: 1

MISC DATA SCALING DECIMAL PLACES
Range: 0–3
DECPLM2 := _____
Factory-Default Setting: 1

AMPERES REPORTING DEADBAND COUNTS
Range: 0–32767
Hidden When: ECLASSA2 := 0
ANADBA2 := _____
Factory-Default Setting: 100

VOLTS REPORTING DEADBAND COUNTS
Range: 0–32767
Hidden When: ECLASSA2 := 0
ANADBV2 := _____
Factory-Default Setting: 100

MISC DATA REPORTING DEADBAND COUNTS
Range: 0–32767
Hidden When: ECLASSA2 := 0 and ECLASSC2 := 0
ANADBM2 := _____
Factory-Default Setting: 100

MINUTES FOR REQUEST INTERVAL
Range: I, M, 1–32767
TIMERQ2 := _____
Factory-Default Setting: 1

SELECT/OPERATE TIME-OUT
Range: 0.0–30.0
STIMEO2 := _____
Factory-Default Setting: 1.0

SEND DATA LINK HEARTBEAT
Range: 0–7200
Hidden When: DNPTR2 := UDP
DNPINA2 := _____
Factory-Default Setting: 120

EVENT MESSAGE CONFIRM TIME-OUT
Range: 1–50 s
ETIMEO2 := _____
Factory-Default Setting: 5

ENABLE UNSOLICITED REPORTING
Range: Y, N
Hidden When: ECLASSA2 := 0, ECLASSB2 := 0, ECLASSC2 := 0, and ECLASSV2 := 0
UNSOL2 := _____
Factory-Default Setting: N

ENABLE UNSOLICITED REPORTING AT POWER-UP
Range: Y, N
Hidden When: UNSOL2 := N
PUNSOL2 := _____
Factory-Default Setting: N

NUMBER OF EVENTS TO TRANSMIT ON
Range: 1–200
Hidden When: UNSOL2 := N
NUMEVE2 := _____
Factory-Default Setting: 10

OLDEST EVENT TO TX ON
Range: 0.0–99999.0 s
Hidden When: UNSOL2 := N
AGEEVE2 := _____
Factory-Default Setting: 2.0

UNSOLICITED MESSAGE MAX RETRY ATTEMPTS
Range: 2–10
Hidden When: UNSOL2 := N
URETRY2 := _____
Factory-Default Setting: 3

UNSOLICITED MESSAGE OFFLINE TIME-OUT
Range: 1–5000 s
Hidden When: UNSOL2 := N
UTIMEO2 := _____
Factory-Default Setting: 60

Session 3

All Settings Are Hidden When: EDNP < 3

DNP Master IP ADDRESS (zzz.yyy.xxx.www) **DNPIP3 :=** _____
Range: 15 characters
Factory-Default Setting: 192.168.1.5

TRANSPORT PROTOCOL **DNPTR3 :=** _____
Range: UDP, TCP
Factory-Default Setting: TCP

UDP RESPONSE PORT **DNPUDP3 :=** _____
Range: REQ, 1–65534
Factory-Default Setting: 2000

DNP ADDRESS TO REPORT TO **REPADR3 :=** _____
Range: 0–65519
Factory-Default Setting: 1

DNP MAP **DNPMAP3 :=** _____
Range: 1–3
Factory-Default Setting: 1

ANALOG INPUT DEFAULT VARIATION **DVARAI3 :=** _____
Range: 1–6
Factory-Default Setting: 4

CLASS FOR BINARY EVENT DATA **ECLASSB3 :=** _____
Range: 0–3
Factory-Default Setting: 1

CLASS FOR COUNTER EVENT DATA **ECLASSC3 :=** _____
Range: 0–3
Factory-Default Setting: 0

CLASS FOR ANALOG EVENT DATA **ECLASSA3 :=** _____
Range: 0–3
Factory-Default Setting: 2

CURRENTS SCALING DECIMAL PLACES **DECPLA3 :=** _____
Range: 0–3
Factory-Default Setting: 1

VOLTAGES SCALING DECIMAL PLACES **DECPLV3 :=** _____
Range: 0–3
Factory-Default Setting: 1

MISC DATA SCALING DECIMAL PLACES **DECPLM3 :=** _____
Range: 0–3
Factory-Default Setting: 1

AMPERES REPORTING DEADBAND COUNTS **ANADBA3 :=** _____
Range: 0–32767
Hidden When: ECLASSA3 := 0
Factory-Default Setting: 100

VOLTS REPORTING DEADBAND COUNTS **ANADBV3 :=** _____
Range: 0–32767
Hidden When: ECLASSA3 := 0
Factory-Default Setting: 100

MISC DATA REPORTING DEADBAND COUNTS **ANADBM3 :=** _____
Range: 0–32767
Hidden When: ECLASSA3 := 0 and ECLASSC3 := 0
Factory-Default Setting: 100

MINUTES FOR REQUEST INTERVAL **TIMERQ3 :=** _____
Range: I, M, 1–32767
Factory-Default Setting: 1

SELECT/OPERATE TIME-OUT **STIMEO3 :=** _____
Range: 0.0–30.0
Factory-Default Setting: 1.0

SEND DATA LINK HEARTBEAT **DNPINA3 :=** _____
Range: 0–7200
Hidden When: DNPTR3 := UDP
Factory-Default Setting: 120

EVENT MESSAGE CONFIRM TIME-OUT **ETIMEO3 :=** _____
Range: 1–50 s
Factory-Default Setting: 5

ENABLE UNSOLICITED REPORTING **UNSOL3 :=** _____
Range: Y, N
Hidden When: ECLASSA3 := 0, ECLASSB3 := 0, ECLASSC3 := 0, and ECLASSV3 := 0
Factory-Default Setting: N

ENABLE UNSOLICITED REPORTING AT POWER-UP **PUNSOL3 :=** _____
Range: Y, N
Hidden When: UNSOL3 := N
Factory-Default Setting: N

NUMBER OF EVENT TO TRANSMIT ON **NUMEVE3 :=** _____
Range: 1–200
Hidden When: UNSOL3 := N
Factory-Default Setting: 10

OLDEST EVENT TO TX ON **AGEEVE3 :=** _____
Range: 0.0–99999.0 s
Hidden When: UNSOL3 := N
Factory-Default Setting: 2.0

UNSOLICITED MESSAGE MAX RETRY ATTEMPTS **URETRY3 :=** _____
Range: 2–10
Hidden When: UNSOL3 := N
Factory-Default Setting: 3

UNSOLICITED MESSAGE OFFLINE TIME-OUT **UTIMEO3 :=** _____
Range: 1–5000 s
Hidden When: UNSOL3 := N
Factory-Default Setting: 60

SNTP Client Protocol Settings

ENABLE SNTP CLIENT **ESNTP :=** _____
Range: OFF, UNICAST, MANYCAST, BROADCAST
Factory-Default Setting: OFF

When ESNTP ≠ OFF

PRIMARY SERVER IP ADDRESS (zzz.yyy.xxx.www) **SNTPPSIP :=** _____
Factory-Default Setting: " "

(To accept updates from any server when ESNTP := BROADCAST, set SNTPPSIP to 0.0.0.0; only IP addresses in the range 224.0.0.1 through 239.255.255.255 are valid when ESNTP := MANYCAST)

When ESNTP := UNICAST

BACKUP SERVER IP ADDRESS (zzz.yyy.xxx.www) **SNTPBSIP :=** _____
Factory-Default Setting: " "

SNTP IP (LOCAL) PORT NUMBER **SNTPPORT :=** _____
Range: 1–65534
Factory-Default Setting: 1

(SNTPPORT cannot be set to 20, 21, 102, 502, 23, TPORT, or DNPNUM)

SNTP UPDATE RATE **SNTPRATE :=** _____
Range: 15–3600 s
Factory-Default Setting: 15

When ESNTP := UNICAST or MANYCAST

SNTP TIMEOUT **SNTPTO :=** _____
Range: 5–20 s
(SNTPTO must be less than setting SNTPRATE)
Factory-Default Setting: 5

PORT 2 (Fiber-Optic Serial Port)

Hidden When: E64F := Y *or if* EPORT := N.

ENABLE PORT
Range: Y, N

EPORT= _____
Factory-Default Setting: Y

Protocol Select

PROTOCOL
Range: SEL, DNP, MOD, MBA, MBB, MB8A, MB8B MBTA, MBTB)

PROTO := _____
Factory-Default Setting: SEL

Communications

SPEED
Range: 300, 1200, 2400, 4800, 9600, 19200, 38400 bps

SPEED := _____
Factory-Default Setting: 9600

DATA BITS
Range: 7, 8 bits
Hidden When: PROTO := MOD, DNP, or MB_)

BITS := _____
Factory-Default Setting: 8

PARITY
Range: O, E, N
Hidden When: E49RTD := EXT or PROTO := MB_)

PARITY := _____
Factory-Default Setting: N

STOP BITS
Range: 1, 2 bits
Hidden When: PROTO := MOD or MB_)

STOP := _____
Factory-Default Setting: 1

PORT TIME-OUT
Range: 0–30 min
Hidden When: PROTO := MOD or MB_)

T_OUT := _____
Factory-Default Setting: 5

SEND AUTOMESSAGE
Range: Y, N
Hidden When: PROTO := MOD, DNP, or MB_)

AUTO := _____
Factory-Default Setting: N

FAST OP MESSAGES
Range: Y, N
Hidden When: PROTO := MOD, DNP, or MB_)

FASTOP := _____
Factory-Default Setting: N

HDWR HANDSHAKING
Range: Y, N
Hidden When: PROTO := MOD, DNP, SEL, or MB_)

RTSCTS := _____
Factory-Default Setting: N

Modbus

MODBUS SLAVE ID
Range: 1–247
Hidden When: PROTO := SEL, DNP, or MB_

SLAVEID := _____
Factory-Default Setting: 1

DNP3 Protocol
Hidden When: PROTO := SEL, MB_, or MOD

DNP ADDRESS
Range: 0–65519

DNPADR := _____
Factory-Default Setting: 0

DNP ADDRESS TO REPORT TO
Range: 0–65519

REPADR1 := _____
Factory-Default Setting: 1

DNP MAP
Range: 1–3

DNPMAP1 := _____
Factory-Default Setting: 1

ANALOG INPUT DEFAULT VARIATION
Range: 1–6
DVARAI1 := _____
Factory-Default Setting: 4

CLASS FOR BINARY EVENT DATA
Range: 0–3
ECLASSB1 := _____
= Factory-Default Setting: 1

CLASS FOR COUNTER EVENT DATA
Range: 0–3
ECLASSC1 := _____
= Factory-Default Setting: 0

CLASS FOR ANALOG EVENT DATA
Range: 0–3
ECLASSA1 := _____
Factory-Default Setting: 2

CURRENTS SCALING DECIMAL PLACES
Range: 0–3
DECPLA1 := _____
Factory-Default Setting: 1

VOLTAGES SCALING DECIMAL PLACES
Range: 0–3
DECPLV1 := _____
Factory-Default Setting: 1

MISC DATA SCALING DECIMAL PLACES
Range: 0–3
DECPLM1 := _____
Factory-Default Setting: 1

AMPERES REPORTING DEADBAND COUNTS
Range: 0–32767
Hidden When: ECLASSA1 := 0)
ANADBA1 := _____
Factory-Default Setting: 100

VOLTS REPORTING DEADBAND COUNTS
Range: 0–32767
Hidden When: ECLASSA1 := 0)
ANADBV1 := _____
Factory-Default Setting: 100

MISC DATA REPORTING DEADBAND COUNTS
Range: 0–32767
Hidden When: ECLASSA1 := 0 and ECLASSC1 := 0)
ANADBM1 := _____
Factory-Default Setting: 100

MINUTES FOR REQUEST INTERVAL
Range: I (ignores), M (disables), 1–32767
TIMERQ1 := _____
Factory-Default Setting: I

SELECT/OPERATE TIME-OUT
Range: 0.0–30.0 s
STIMEO1 := _____
Factory-Default Setting: 1.0

DATA LINK RETRIES
Range: 0–15
DRETRY1 := _____
Factory-Default Setting: 0

SECONDS TO DATA LINK TIME-OUT
Range: 0.0–5.0
Hidden When: DRETRY1 := 0)
DTIMEO1 := _____
Factory-Default Setting: 1

EVENT MESSAGE CONFIRM TIME-OUT
Range: 1–50 s
ETIMEO1 := _____
Factory-Default Setting: 5

ENABLE UNSOLICITED REPORTING
Range: Y, N
Hidden When: ECLASSA1 := 0, ECLASSB1 := 0, and ECLASSC1 := 0
UNSOL1 := _____
Factory-Default Setting: N

ENABLE UNSOLICITED REPORTING AT POWER-UP
Range: Y, N
Hidden When: UNSOL1 := N)
PUNSOL1 := _____
Factory-Default Setting: N

NUMBER OF EVENTS TO TRANSMIT ON
Range: 1–200
Hidden When: UNSOL1 := N)
NUMEVE1 := _____
Factory-Default Setting: 10

OLDEST EVENT TO TX ON
Range: 0.0–99999.0 s
Hidden When: UNSOL1 := N)
AGEEVE1 := _____
Factory-Default Setting: 2.0

UNSOLICITED MESSAGE MAX RETRY ATTEMPTS
Range: 2–10
Hidden When: UNSOL1 := N)

URETRY1 := _____
Factory-Default Setting: 3

UNSOLICITED MESSAGE OFFLINE TIME-OUT
Unsolicited Message Offline Time-Out
Range: 1–5000 s
Hidden When: UNSOL1 := N)

UTIMEO1 := _____
Factory-Default Setting: 60

Mirrored Bits Protocol

Hidden When: PROTO := SEL, DNP, or MOD)

MB TRANSMIT IDENTIFIER
Range: 1–4

TXID := _____
Factory-Default Setting: 2

MB RECEIVE IDENTIFIER
Range: 1–4

RXID := _____
Factory-Default Setting: 1

MB RX BAD PICKUP TIME
Range: 0–10000 s

RBADPU := _____
Factory-Default Setting: 60

MB CHANNEL BAD PICKUP
Range: 1–10000 ppm

CBADPU := _____
Factory-Default Setting: 1000

MB RECEIVE DEFAULT STATE
Range: 8 characters

RXDFLT := _____
Factory-Default Setting: XXXXXXXX

RMB1 PICKUP DEBOUNCE MESSAGES
Range: 1–8

RMB1PU := _____
Factory-Default Setting: 1

RMB1 DROPOUT DEBOUNCE MESSAGES
Range: 1–8

RMB1DO := _____
Factory-Default Setting: 1

RMB2 PICKUP DEBOUNCE MESSAGES
Range: 1–8

RMB2PU := _____
Factory-Default Setting: 1

RMB2 DROPOUT DEBOUNCE MESSAGES
Range: 1–8

RMB2DO := _____
Factory-Default Setting: 1

RMB3 PICKUP DEBOUNCE MESSAGES
Range: 1–8

RMB3PU := _____
Factory-Default Setting: 1

RMB3 DROPOUT DEBOUNCE MESSAGES
Range: 1–8

RMB3DO := _____
Factory-Default Setting: 1

RMB4 PICKUP DEBOUNCE MESSAGES
Range: 1–8

RMB4PU := _____
Factory-Default Setting: 1

RMB4 DROPOUT DEBOUNCE MESSAGES
Range: 1–8

RMB4DO := _____
Factory-Default Setting: 1

RMB5 PICKUP DEBOUNCE MESSAGES
Range: 1–8

RMB5PU := _____
Factory-Default Setting: 1

RMB5 DROPOUT DEBOUNCE MESSAGES
Range: 1–8

RMB5DO := _____
Factory-Default Setting: 1

RMB6 PICKUP DEBOUNCE MESSAGES
Range: 1–8

RMB6PU := _____
Factory-Default Setting: 1

RMB6 DROPOUT DEBOUNCE MESSAGES
Range: 1–8

RMB6DO := _____
Factory-Default Setting: 1

RMB7 PICKUP DEBOUNCE MESSAGES
Range: 1–8

RMB7PU := _____
Factory-Default Setting: 1

RMB7 DROPOUT DEBOUNCE MESSAGES **RMB7DO :=** _____
Range: 1–8 Factory-Default Setting: 1

RMB8 PICKUP DEBOUNCE MESSAGES **RMB8PU :=** _____
Range: 1–8 Factory-Default Setting: 1

RMB8 DROPOUT DEBOUNCE MESSAGES **RMB8DO :=** _____
Range: 1–8 Factory-Default Setting: 1

PORT 3 (EIA-232 Port)

(All Serial Port settings are hidden if EPORT := N)

ENABLE PORT **EPORT :=** _____
Range: Y, N Factory-Default Setting: Y

Protocol Select

PROTOCOL **PROTO :=** _____
Range: SEL, DNP, MOD, MBA, MBB, MB8A, MB8B MBTA, MBTB) Factory-Default Setting: SEL

Communications

SPEED **SPEED :=** _____
Range: 300, 1200, 2400, 4800, 9600, 19200, 38400 bps Factory-Default Setting: 9600

DATA BITS **BITS :=** _____
Range: 7, 8 bits Factory-Default Setting: 8
Hidden When: PROTO := DNP, MOD, or MB_

PARITY **PARITY :=** _____
Range: O, E, N Factory-Default Setting: N
Hidden When: PROTO := MB_)

STOP BITS **STOP :=** _____
Range: 1, 2 bits Factory-Default Setting: 1
Hidden When: PROTO := MOD or MB_

PORT TIME-OUT **T_OUT :=** _____
Range: 0–30 min Factory-Default Setting: 5
Hidden When: PROTO := MOD or MB_

HDWR HANDSHAKING **RTSCTS :=** _____
Range: Y, N Factory-Default Setting: N
Hidden When: COMMINF := 485 or PROTO := MOD, DNP, or MB_

SEND AUTOMESSAGE **AUTO :=** _____
Range: Y, N Factory-Default Setting: N
Hidden When: PROTO := MOD, DNP, or MB_

FAST OP MESSAGES **FASTOP :=** _____
Range: Y, N Factory-Default Setting: N
Hidden When: PROTO := MOD, DNP, or MB_)

Modbus

MODBUS SLAVE ID **SLAVEID :=** _____
Range: 1–247 Factory-Default Setting: 1
Hidden When: PROTO := SEL, DNP, or MB_

DNP3 Protocol

Hidden When: PROTO := SEL, MB_, or MOD

DNP ADDRESS
Range: 0–65519
DNPADR := _____
Factory-Default Setting: 0

DNP ADDRESS TO REPORT TO
DNP Address to Report to
Range: 0–65519
REPADR1 := _____
Factory-Default Setting: 1

DNP MAP
Range: 1–3
DNPMAP1 := _____
Factory-Default Setting: 1

ANALOG INPUT DEFAULT VARIATION
Range: 1–6
DVARAI1 := _____
Factory-Default Setting: 4

CLASS FOR BINARY EVENT DATA
Range: 0–3
ECLASSB1 := _____
Factory-Default Setting: 1

CLASS FOR COUNTER EVENT DATA
Range: 0–3
ECLASSC1 := _____
Factory-Default Setting: 0

CLASS FOR ANALOG EVENT DATA
Range: 0–3
ECLASSA1 := _____
Factory-Default Setting: 2

CURRENTS SCALING DECIMAL PLACES
Range: 0–3
DECPLA1 := _____
Factory-Default Setting: 1

VOLTAGES SCALING DECIMAL PLACES
Range: 0–3
DECPLV1 := _____
Factory-Default Setting: 1

MISC DATA SCALING DECIMAL PLACES
Range: 0–3
DECPLM1 := _____
Factory-Default Setting: 1

AMPERES REPORTING DEADBAND COUNTS
Range: 0–32767
Hidden When: ECLASSA1 := 0
ANADBA1 := _____
Factory-Default Setting: 100

VOLTS REPORTING DEADBAND COUNTS
Range: 0–32767
Hidden When: ECLASSA1 := 0)
ANADBV1 := _____
Factory-Default Setting: 100

MISC DATA REPORTING DEADBAND COUNTS
Range: 0–32767
Hidden When: ECLASSA1 := 0 and ECLASSC1 := 0
ANADBM1 := _____
Factory-Default Setting: 100

MINUTES FOR REQUEST INTERVAL
Minutes for Request Interval
Range: I (ignore), M (disable), 1–32767
TIMERQ1 := _____
Factory-Default Setting: I

SELECT/OPERATE TIME-OUT
Range: 0.0–30.0
STIMEO1 := _____
Factory-Default Setting: 1.0

DATA LINK RETRIES
Range: 0–15
DRETRY1 := _____
Factory-Default Setting: 0

SECONDS TO DATA LINK TIME-OUT
Range: 0–5
Hidden When: DRETRY1 := 0
DTIMEO1 := _____
Factory-Default Setting: 1

EVENT MESSAGE CONFIRM TIME-OUT
Range: 1–50 s
ETIMEO1 := _____
Factory-Default Setting: 5

ENABLE UNSOLICITED REPORTING **UNSOL1 :=** _____
Range: Y, N
Hidden When: ECLASSA1 := 0, ECLASSB1 := 0, and ECLASSC1 := 0
Factory-Default Setting: N

ENABLE UNSOLICITED REPORTING AT POWER-UP **PUNSOL1 :=** _____
Range: Y, N
Hidden When: UNSOL1 := N
Factory-Default Setting: N

NUMBER OF EVENTS TO TRANSMIT ON **NUMEVE1 :=** _____
Range: 1–200
Hidden When: UNSOL1 := N
Factory-Default Setting: 10

OLDEST EVENT TO TX ON **AGEEVE1 :=** _____
Range: 0.0–99999.0 s
Hidden When: UNSOL1 := N)
Factory-Default Setting: 2.0

UNSOLICITED MESSAGE MAX RETRY ATTEMPTS **URETRY1 :=** _____
Range: 2–10
Hidden When: UNSOL1 := N
Factory-Default Setting: 3

UNSOLICITED MESSAGE OFFLINE TIME-OUT **UTIMEO1 :=** _____
Range: 1–5000 s
Range: UNSOL1 := N)
Factory-Default Setting: 60

Report Settings (SET R Command)

SER Chatter Criteria

Auto-Removal Enable **ESERDEL :=** _____
Range: Y, N
Factory-Default Setting: N

Number of Counts **SRDLCNT :=** _____
Range: 2–20
Factory-Default Setting: 5

Removal Time **SRDLTIM :=** _____
Range: 0.1–90.0 s
Factory-Default Setting: 1.0

SER Trigger Lists

SERn = as many as 24 Relay Word elements, separated by spaces or commas. Use NA to disable the setting.

SER1 := _____
Factory-Default Setting: E64S 64S1 64S1T 64S2 64S2T AMP_ON AMP_LO SHUTDOWN EN_RETRY CNT_FULL 59N1 59N1T 59NRMS 59NRMST 64F1 64F1T 64F2 64F2T 64FFLT LOW_ISRC OUT_OPEN DCSW_STS VN3HIGH

SER2 := _____
Factory-Default Setting: TR TRIP ULTRIP TRGTR RSTTRGT OUT01 OUT02 OUT03 OUT04 IN01 IN02 WARNING

SER3 := _____
Factory-Default Setting: NGRSHORT NGROPEN HALARM HALARML SALARM IRIGOK IN_CLIP

SER4 := _____
Factory-Default Setting: NA

Relay Word Bit Aliases

ALIASn = 'RW Bit'(space)'Alias'(space)'Asserted Text'(space)'Deasserted Text'
Alias, asserted, and deasserted text strings can be as many as 15 characters in length. Use NA to disable the setting

Enable ALIAS
Range: N, 1–20

EALIAS := _____
Factory-Default Setting: 10

ALIAS1 := _____
Factory-Default Setting: E64S
64S_ELEMENT ENABLED DISABLED

ALIAS2 := _____
Factory-Default Setting: AMP_ON
AMPLIFIER ENABLED DISABLED

ALIAS3 := _____
Factory-Default Setting: AMP_LO
AMP_LOCKOUT YES NO

ALIAS4 := _____
Factory-Default Setting: SHUTDOWN
AMP_SHUTDOWN YES NO

ALIAS5 := _____
Factory-Default Setting: EN_RETRY
AMP_RETRY ACTIVE RESET

ALIAS6 := _____
Factory-Default Setting: CNT_FULL
AMP_RETRY_COUNT FULL NOT_FULL

ALIAS7 := _____
Factory-Default Setting: LOW_ISRC
INJCT_CURRENT LOW NORMAL

ALIAS8 := _____
Factory-Default Setting: OUT_OPEN
INJCT_TERMINALS OPEN OK

ALIAS9 := _____
Factory-Default Setting: DCSW_STS
AMP_DC_SWITCH OPEN CLOSE

ALIAS10 := _____
Factory-Default Setting: IN_CLIP
NEUT_CURR_CLIP YES NO

Event Report

EVENT TRIGGER (SELOGIC)

ER := _____
Factory-Default Setting: 0

Profile Report

PROFILE LIST
Range: NA, as many as 17 analog quantities

PROFLIST := _____
Factory-Default Setting: INS_RES
INS_CAP VN3_MAG VN_RMS
IN3_MAG IN_RMS MES_NGR I_SRC
INS_RES1 INS_RES2 INS_RES3
INS_RES4

PROFILE ACQ RATE
Range: 0.1, 1, 5, 15, 30, 60 min

PROFAR := _____
Factory-Default Setting: 1

DNP3 Map Settings (Set DNP n Command)

Use SET DNP n command with n = 1, 2, or 3 to create up to three DNP User Maps. Refer to Appendix D: DNP3 Communications for details. This is DNP3 Map 1 (DNP Map 2 and DNP Map 3 tables are identical to DNP Map 1 table).

Binary Input Map

DNP Binary Input Label Name (10 characters)

BI_00 := _____
Factory-Default Setting: ENABLED

BI_01 := _____
Factory-Default Setting: TRIP

BI_02 := _____
Factory-Default Setting: STWARN

BI_03 := _____
Factory-Default Setting: STFAIL

BI_04 := _____
Factory-Default Setting: STSET

BI_05 := _____
Factory-Default Setting: IN01

BI_06 := _____
Factory-Default Setting: IN02

BI_07 := _____
Factory-Default Setting: NA

Binary Output Map

DNP Binary Output Label Name (10 characters)

BO_00 := _____
Factory-Default Setting: RB01

BO_01 := _____
Factory-Default Setting: RB02

BO_02 := _____
Factory-Default Setting: RB03

BO_03 := _____
Factory-Default Setting: RB04

BO_04 := _____
Factory-Default Setting: RB05

BO_05 := _____
Factory-Default Setting: RB06

BO_06 := _____
Factory-Default Setting: RB07

BO_07 := _____
Factory-Default Setting: RB08

BO_08 := _____
Factory-Default Setting: NA

Analog Input Map

DNP Analog Input Label Name (24 characters)

AI_00 := _____
Factory-Default Setting: INS_RES

AI_01 := _____
Factory-Default Setting: INS_CAP

AI_02 := _____
Factory-Default Setting: VN1_MAG

AI_03 := _____
Factory-Default Setting: VN3_MAG

AI_04 := _____
Factory-Default Setting: VN_RMS

AI_05 := _____
Factory-Default Setting: I_SRC

AI_06 := _____
Factory-Default Setting: VNF1_MAG

AI_07 := _____
Factory-Default Setting: INS_RES1

AI_08 := _____
Factory-Default Setting: VNF2_MAG

AI_09 := _____
Factory-Default Setting: INS_RES2

AI_010 := _____
Factory-Default Setting: VNF3_MAG

AI_011 := _____
Factory-Default Setting: INS_RES3

AI_012 := _____
Factory-Default Setting: VNF4_MAG

AI_13 := _____
Factory-Default Setting: INS_RES4

AI_14 := _____
Factory-Default Setting: NA

AI_15 := _____
Factory-Default Setting: NA

AI_16 := _____
Factory-Default Setting: NA

AI_17 := _____
Factory-Default Setting: NA

AI_18 := _____
Factory-Default Setting: NA

AI_19 := _____
Factory-Default Setting: NA

SECTION 7

Communications

Overview

A communications interface and protocol are required for communicating with the SEL-2664S. A communications interface is the physical connection on a device. Once you have established a physical connection, you must use a communications protocol to interact with the relay.

The first part of this section describes communications interfaces and protocols available with the relay, including communications interface connections. The remainder of the section describes the ASCII commands you can use to communicate with the relay to obtain information, reports, data, or perform control functions.

Communications Interfaces

The SEL-2664S provides several physical interfaces, as shown in *Table 7.1*, including EIA-232, fiber-optic serial port, and dual-redundant fiber-optic Ethernet port.

Table 7.1 SEL-2664S Communications Port Interfaces

Port	Communications Port Interface	Location	Feature
PORT F	EIA-232	Front	Standard
PORT 1	Dual, redundant 100BASE-FX Ethernet (LC connector for Port 1A and Port 1B)	Rear	Standard
PORT 2[a]	Multimode Fiber-Optic Serial (ST® connector)	Rear	Standard
PORT 3	EIA-232	Rear	Standard

[a] This port can receive the field ground measurement information from the optional external SEL-2664. Refer to the SEL-2664 Instruction Manual for information on the fiber-optic interface.

Be sure to evaluate the installation and communication necessary to integrate with existing devices before installing your SEL-2664S. For example, consider the fiber-optic interface in noisy installations or for large communications distances. Following is general information on possible applications of the different interfaces.

Serial (EIA-232) Port

Use the EIA-232 port for communications distances as long as 10 m (32 feet) in low noise environments. To connect a PC serial port to the relay front-panel serial port and enter relay commands, you will need the following:

- A personal computer equipped with one available EIA-232 serial port
- A communications cable to connect the computer serial port to the relay serial ports
- Terminal emulation software to control the computer serial port
- An SEL-2664S Relay

Some of the SEL devices available for integration or communications system robustness are included in the following list:

- SEL Communications Processors (SEL-3530, SEL-2032, SEL-2030, SEL-2020)
- SEL-2800 series fiber-optic transceivers
- SEL-2890 Ethernet Transceiver
- SEL-2505 Remote I/O Module (with SEL-2812 compatible ST option for fiber-optic link to Port 2)

A variety of terminal emulation programs on personal computers can communicate with the relay. For the best display, use VT-100 terminal emulation or the closest variation.

The default settings for all EIA-232 serial ports are listed below:

Baud Rate = 9600 Data Bits = 8 Parity = N Stop Bits = 1

To change the port settings, use the **SET P** command (see *Section 6: Settings*).

Hardware Flow Control

All EIA-232 serial ports support RTS/CTS hardware handshaking (hardware flow control). To enable hardware handshaking, use the **SET P** command to set RTSCTS := Y. Disable hardware handshaking by setting RTSCTS := N.

- If RTSCTS := N, the relay permanently asserts the RTS line.
- If RTSCTS := Y, the relay deasserts RTS when it is unable to receive characters.
- If RTSCTS := Y, the relay does not send characters until the CTS input is asserted.

Fiber-Optic Serial Port

Use the fiber-optic port (Port 2) for safety and communications distances as far as 1 km. Communications distances as far as 4 km can be achieved by using an SEL-2812 transceiver on Port 3. While Port 2 and the SEL-2812 are compatible, Port 2 is less sensitive than the SEL-2812, which limits the distance to 1 km. This port can alternatively be used to receive the field ground measurement information from the optional external SEL-2664.

Ethernet Port

Use the Ethernet port for interfacing with an Ethernet network environment. With dual Ethernet ports the unit has an unmanaged Ethernet switch. Redundant configurations support automatic failover switching from primary to backup network if a failure in the primary network is detected. In addition to failover mode, the unit can operate in a "fixed connection (to netport) mode" or in a "switched mode" (as an unmanaged switch).

Figure 7.1 shows an example of a simple Ethernet network configuration, *Figure 7.2* shows an example of an Ethernet network configuration with dual redundant connections, and *Figure 7.3* shows an example of an Ethernet network configuration with ring structure.

NOTE: The SEL-2664S is only available with fiber-optic Ethernet ports (LC connectors).

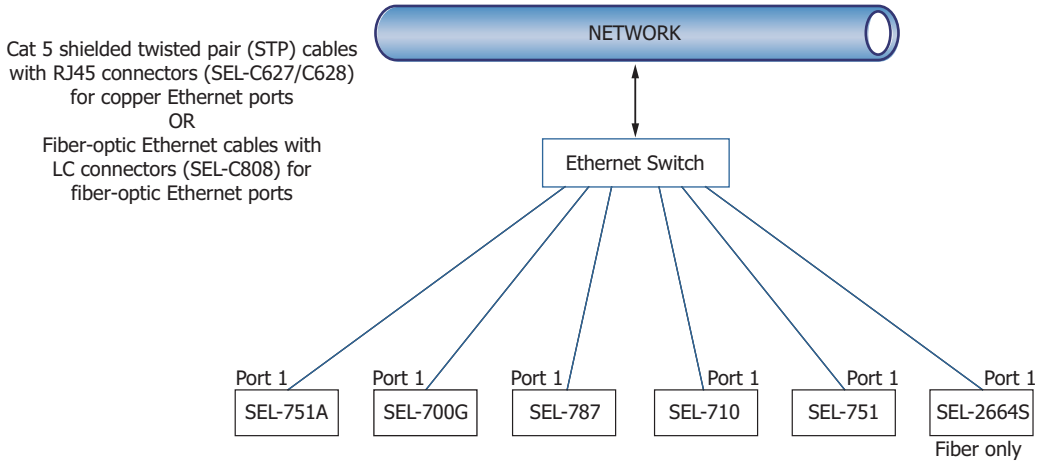

Figure 7.1 Simple Ethernet Network Configuration

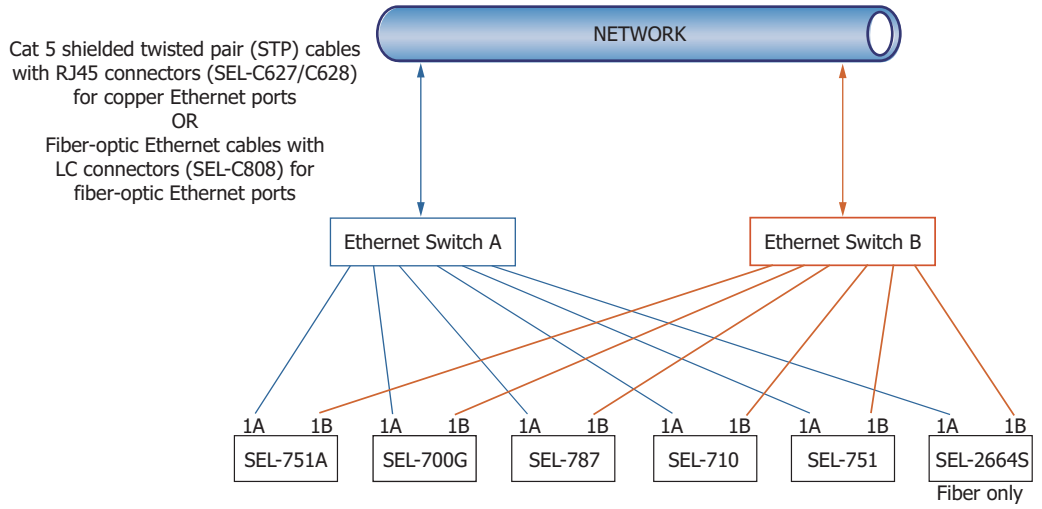

Figure 7.2 Ethernet Network Configuration with Dual Redundant Connections

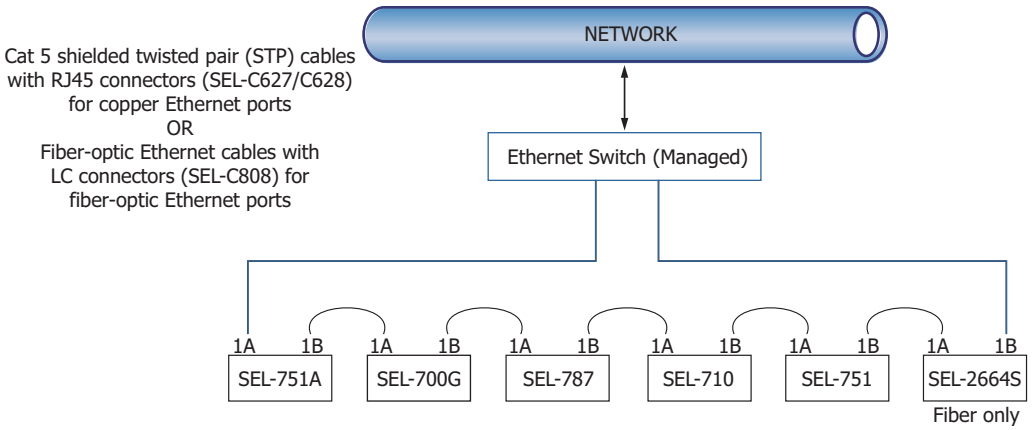

Figure 7.3 Ethernet Network Configuration With Ring Structure

Dual Network Port Operation

The SEL-2664S dual Ethernet port option has two network ports. Network port failover mode enables the dual Ethernet port to operate as a single network adapter with a primary and standby physical interface. You can connect the two network ports to the same network or to different networks depending on your specific Ethernet network architecture.

Failover Mode

NOTE: If you change settings for the host port in the relay and the standby network port is active, the relay resets and returns to operation on the primary port.

In the failover mode operation, the relay determines the active port. To use failover mode, proceed with the following steps.

Step 1. Set NETMODE to FAILOVER.

Step 2. Set FTIME to the required network port failover time.

Step 3. Set NETPORT to the preferred network interface.

On startup the relay communicates via NETPORT (primary port) selected. If the SEL-2664S detects a link failure on the primary port, it activates the standby port after the failover time, FTIME, elapses. If the link status on the primary link returns to normal before the failover time expires, the failover timer resets and uninterrupted operation continues on the primary network port.

After failover, while communicating via standby port, the SEL-2664S checks the primary link periodically and continues checking until it detects a normal link status. The relay continues to communicate via the standby port even after the primary port returns to normal. The port of choice for communication is reevaluated on change of settings or failure of the standby port or on restart. The relay returns to operation on the primary link under those conditions if it detects a normal link status. When the active and backup links both fail, the relay alternates checking for the link status of the primary and standby ports.

Unmanaged Switch Mode

If you have a network configuration where you want to use the relay as an unmanaged switch, set NETMODE to SWITCHED. In this mode, both links are enabled. The relay will respond to the messages received on either port. All the messages received on one network port that are not addressed to the relay will be transmitted out of the other port without any modifications. In this mode NETPORT setting is ignored.

Fixed Connection Mode

If you have a single network and want to use only one network port, or if you have both ports connected but want to force usage of only one port for various reasons, set NETMODE to FIXED and set NETPORT to the port you want to use. Only the selected network port operates and the other port is disabled.

Autonegotiation, Speed, and Duplex Mode

The single and dual fiber Ethernet ports are fixed by the hardware to work at 100 Mbps and full duplex mode.

NETPORT Selection

With the NETPORT setting, you can select the primary port of communication in failover or fixed communications modes.

IRIG-B

The SEL-2664S has two different physical interfaces to provide demodulated IRIG-B time-code input for time synchronization. Only one input can be used at a time. Connection diagrams for IRIG-B and settings selection are in *Figure 7.4* through *Figure 7.7* in this section.

Option 1: Port 3

Connect to an SEL communications processor with an SEL-C273A Cable to bring IRIG-B input to the EIA-232 Port. Refer to *Figure 7.4* for a connection diagram. Refer to *Figure 7.5* to connect an SEL Time Source (SEL-2401, SEL-2404, SEL-2407) for IRIG-B input to Port 3.

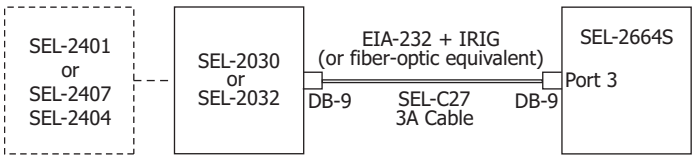

Cannot use Port 2 for IRIG-B connection if Port 3 is used.

Set Group setting IRIG TIME SOURCE to TIME_SRC := IRIG1.

Figure 7.4 IRIG-B Input Via EIA-232 Port 3 (SEL Communications Processor as Source)

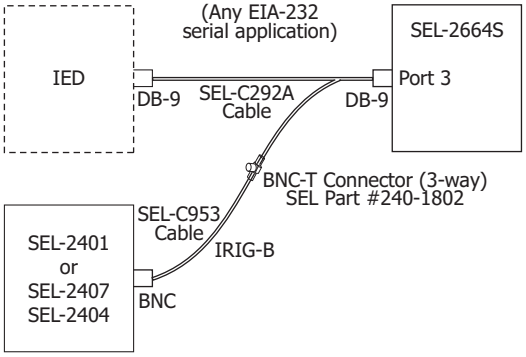

Cannot use Port 2 for the IRIG-B connection if Port 3 is used.

Set Group setting IRIG TIME SOURCE to TIME_SRC := IRIG1.

Figure 7.5 IRIG-B Input Via EIA-232 Port 3 (SEL-2401/2404/2407 Time Source)

Option 2: Port 2 (Fiber-Optic Serial Port)

Fiber-Optic Serial Port 2 can be used to bring IRIG-B input to the relay as shown in *Figure 7.6* and *Figure 7.7*.

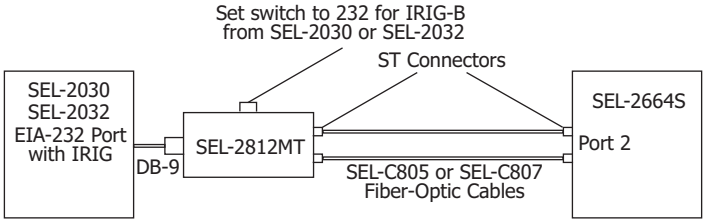

Cannot use Port 3 input for IRIG-B connection if Port 2 is used for IRIG-B input.

Set Group setting IRIG TIME SOURCE to TIME_SRC := IRIG2.

Figure 7.6 IRIG-B Input Via Fiber-Optic EIA-232 Port 2 (SEL-2030/2032 Time Source)

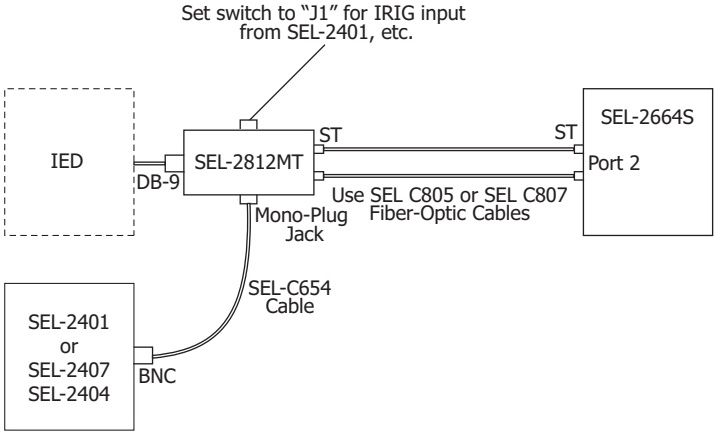

Cannot use Port 3 input for IRIG-B connection if Port 2 is used for IRIG-B input.

Set Group setting IRIG TIME SOURCE to TIME_SRC := IRIG2.

Figure 7.7 IRIG-B Input Via Fiber-Optic EIA-232 Port 2 (SEL-2401/2404/2407 Time Source)

+5 Vdc Power Supply

Serial port power can provide as much as 0.25 A total from all of the +5 Vdc pins. Some SEL communications devices require the +5 Vdc power supply. This +5 Vdc is available only on Pin 1 on Port 3.

Connect Your PC to the Relay

The front port of the SEL-2664S is a standard female 9-pin connector with pin numbering shown in *Figure 7.8*. The pinout assignments for this port are shown in *Table 7.2*. You can connect to a standard 9-pin computer port with an SEL-C234A Cable, as shown in *Figure 7.9*. Use the SEL-5801 Cable Selector Software to select an appropriate cable for another application. This software is available for free download from the SEL website at selinc.com/software/downloads/.

For best performance, the SEL-C234A should not be longer than 10 m (32 ft). For long-distance communication and for electrical isolation of communications ports, use the SEL family of fiber-optic transceivers. Contact SEL for more details on these devices.

Port Connector and Communications Cables

Figure 7.8 shows the front-panel EIA-232 serial port (PORT F) DB-9 connector pinout for the SEL-2664S.

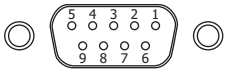

Figure 7.8 EIA-232 DB-9 Connector Pin Numbers

Table 7.2 shows the pin functions for the EIA-232 serial ports.

Table 7.2 EIA-232 Serial Port Pin Functions

Pin	PORT 3 EIA-232	PORT F EIA-232
1	+5 Vdc	N/C
2	RXD	RXD
3	TXD	TXD
4	IRIG+	N/C
5	GND	GND
6	IRIG–	N/C
7	RTS	RTS
8	CTS	CTS
9	GND	GND

Figure 7.9 through *Figure 7.13* show several types of EIA-232 serial communications cables that can connect the SEL-2664S to other devices. These and other cables are available from SEL. Contact the factory for more information.

NOTE: Serial communications cables that are used in the SEL-2664S relays for the MIRRORED BITS protocol should have the **R** designation at the end of the SEL Cable number instead of an **A**. For example, use C234**R** instead of C234**A**.

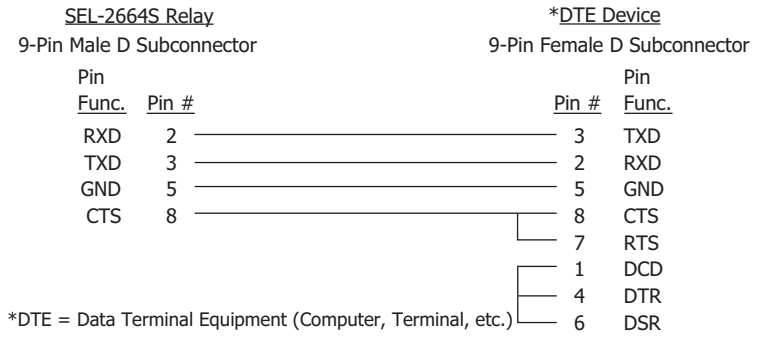

Figure 7.9 SEL-C234A Cable—SEL-2664S to DTE Device

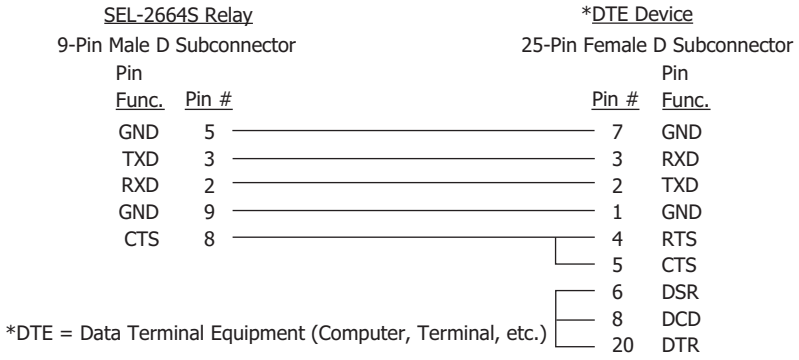

Figure 7.10 SEL-C227A Cable—SEL-2664S to DTE Device

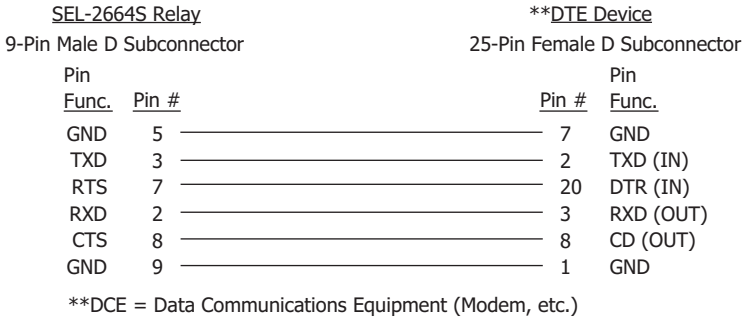

Figure 7.11 SEL-C222 Cable—SEL-2664S to Modem

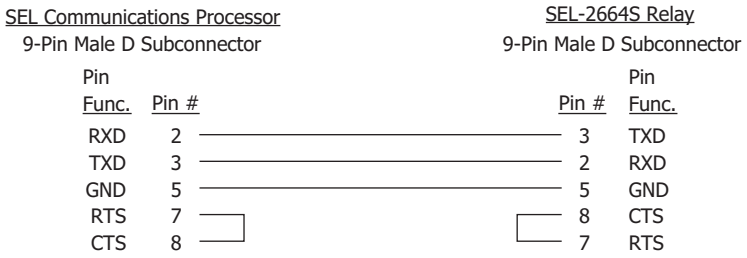

Figure 7.12 SEL-C272A Cable—SEL-2664S to SEL Communications Processor (Without IRIG-B Signal)

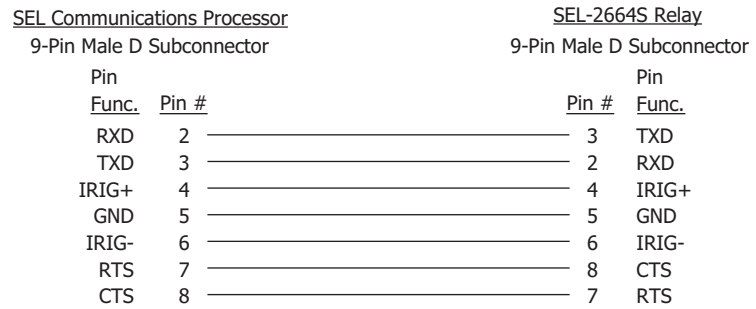

Figure 7.13 SEL-C273A Cable—SEL-2664S to SEL Communications Processor (With IRIG-B Signal)

Communications Protocols

Protocols

Although the SEL-2664S supports a wide range of protocols, not all protocols are available on all ports. See *Table 7.3* for the ports and the protocols available on each port.

Table 7.3 Protocols Supported on the Various Ports

PORT	Supported Protocol
PORT F	SEL ASCII and Compressed ASCII Protocols, SELBOOT, File Transfer Protocol, and Modbus RTU Slave
PORT 1[a]	Modbus TCP/IP, FTP, TCP/IP, IEC 61850, DNP3 LAN/WAN, SNTP, and Telnet TCP/IP (SEL ASCII, Compressed ASCII, SEL Fast Meter, SEL Fast Operate, SEL Fast SER)
PORT 2	All the protocols supported by **PORT 3**
PORT 3	SEL ASCII and Compressed ASCII Protocols, SEL Fast Meter, SEL Fast Operate, SEL Fast SER, SEL Settings File Transfer, SEL MIRRORED BITS, DNP3, and Modbus RTU Slave

[a] PORT 1 concurrently supports two Modbus, two FTP, two Telnet, one SNTP, and six IEC 61850 sessions.

SEL Communications Protocols

SEL ASCII. This protocol is described in *SEL ASCII Protocol and Commands* on page 7.13.

SEL Compressed ASCII. This protocol provides compressed versions of some of the ASCII commands. The compressed commands are described in *SEL ASCII Protocol and Commands*, and the protocol is described in *Appendix C: SEL Communications Processors*.

SEL Fast Operate. This protocol supports binary messages to transfer operation messages. The protocol is described in *Appendix C: SEL Communications Processors*.

SEL Fast SER. This protocol is used to receive binary Sequential Events Record unsolicited responses. The protocol is described in *Appendix C: SEL Communications Processors*.

MIRRORED BITS Protocol

The SEL-2664S supports two MIRRORED BITS communications channels, designated A and B. Within each MIRRORED BITS communications message for a given channel (A or B), there are eight logical data channels (1–8). You can, for example, set MBA on Port 2 and MBB on Port 3. Attempting to set the PROTO setting to MBA, MB8A, or MBTA when Channel A is already assigned to another port (or MBB, MB8B, or MBTB when Channel B is already assigned on another port) results in the following error message: `This Mirrored Bits channel is assigned to another port`. After displaying the error message, the device returns to the PROTO setting for reentry.

Modbus RTU Protocol

The SEL-2664S provides Modbus RTU support. The Modbus protocol is described in *Appendix E: Modbus Communications*.

Distributed Network Protocol (DNP3)

The SEL-2664S provides DNP3 protocol support. The DNP3 protocol is described in *Appendix D: DNP3 Communications*.

Ethernet Protocols

As with other communications interfaces, you must choose a data exchange protocol that operates over the Ethernet network link. The relay supports FTP, Telnet, Ping, Modbus/TCP, DNP3 LAN/WAN, and IEC 61850 protocols.

You should carefully design your Ethernet network to maximize reliability, minimize system administration effort, and provide adequate security. Work with a networking professional to design your substation Ethernet network.

FTP Server

Use a single FTP (File Transfer Protocol) session to access the following files:

CFG.XML	Configuration read-only file in XML format
CFG.TXT	Configuration read-only file in TXT format
ERR.TXT	Error read-only file in text format
SET_61850.CID	IEC 61850 CID read-write file
SET_xx.TXT	Setting files in TXT format

FTP is a standard TCP/IP protocol for exchanging files. A free FTP application is included with most web browser software. You can also obtain a free or inexpensive FTP application from the Internet. When you connect to the relay Ethernet port, you will find files stored in the root (top-level) directory.

Telnet Server

Use the Telnet session (TPORT default setting is port 23) to connect to the relay to use the protocols, which are described in more detail below:

- SEL ASCII
- Compressed ASCII
- Fast Meter
- Fast Operate
- Fast SER

NOTE: Use the **QUIT** command prior to closing the Telnet-to-Host session to set the relay to Access Level 0. Otherwise the relay will remain at an elevated access level until TIDLE expires.

Telnet is a terminal connection across a TCP/IP network that operates in a manner very similar to a direct serial port connection to one of the relay ports. As with FTP, Telnet is a part of TCP/IP. A free Telnet application is included with most computer operating systems, or you can obtain low-cost or freeTelnet applications on the Internet.

Ping Server

Use a Ping client with the relay Ping server to verify that your network configuration is correct. Ping is an application based on ICMP over an IP network. A free Ping application is included with most computer operating systems.

IEC 61850

Use as many as six sessions of MMS over a TCP network to exchange data with the relay. Use GOOSE to do real-time data exchange with as many as 16 incoming messages and 8 outgoing messages. For more details on the IEC 61850 protocol, see *Appendix F: IEC 61850 Communications*.

Simple Network Time Protocol (SNTP)

When Port 1 (Ethernet port) setting ESNTP is not OFF, the internal clock of the relay conditionally synchronizes to the time of day served by a Network Time Protocol (NTP) server. The relay uses a simplified version of NTP called the Simple Network Time Protocol (SNTP). SNTP is not as accurate as IRIG-B. The relay can use SNTP as a less accurate primary time source, or as a backup to the higher accuracy IRIG-B time source.

SNTP as Primary or Backup Time Source

If an IRIG-B time source is connected and either Relay Word bit TSOK or Relay Word bit IRIGOK asserts, then the relay synchronizes the internal time-of-day clock to the incoming IRIB-G time code signal, even if SNTP is configured in the relay and an NTP server is available. If the IRIG-B source is disconnected (if both TSOK and IRIGOK deassert) then the relay synchronizes the internal time-of-day clock to the NTP server, if available. In this way, an NTP server acts either as the primary time source or as a backup time source to the more accurate IRIG-B time source.

Creating an NTP Server

Three SEL application notes, available from the SEL website, describe how to create an NTP server.

- *AN2009-10: Using an SEL-2401, SEL-2404, or SEL-2407 to Serve NTP Via the SEL-3530 RTAC*
- *AN2009-38: Using SEL Satellite-Synchronized Clocks With the SEL-3332 or SEL-3351 to Output NTP*
- *AN2010-03: Using an SEL-2401, SEL-2404, or SEL-2407 to Create a Stratum 1 Linux NTP Server*

Configuring SNTP Client in the Relay

To enable SNTP in the relay, make Port 1 setting ESNTP := UNICAST, MANYCAST, or BROADCAST. *Table 7.4* shows each setting associated with SNTP.

Table 7.4 Settings Associated With SNTP

Setting	Range	Description
ESNTP	UNICAST, MANYCAST, BROADCAST	Selects the mode of operation of SNTP. See descriptions in *SNTP Operation Modes* on page 7.12.
SNTPPSIP	Valid IP Address	Selects primary NTP server when ENSTP := UNICAST, or broadcast address when ESNTP := MANYCAST or BROADCAST.
SNTPPSIB	Valid IP Address	Selects backup NTP server when ESNTP := UNICAST.
SNTPPORT	1–65534	Ethernet port used by SNTP. Leave at default value unless otherwise required.
SNTPRATE	15–3600 seconds	Determines the rate at which the relay asks for updated time from the NTP server when ESNTP := UNICAST or MANYCAST. Determines the amount of time the relay waits for an NTP broadcast when ENSTP ;= BROADCAST.
SNTPTO	5–20 seconds	Determines the amount of time the relay waits for the NTP master to respond when ENSTP ;= UNICAST or MANYCAST.

SNTP Operation Modes

The following sections explain the setting associated with each SNTP operation mode (UNICAST, MANYCAST, and BROADCAST).

ESNTP := UNICAST

In unicast mode of operation, the SNTP client in the relay requests time updates from the primary (IP address setting SNTPPSIP) or backup (IP address setting SNTPBSIP) NTP server at a rate defined by the SNTPRATE setting. If the NTP server does not respond with the period defined by the SNTPTO setting, then the relay tries the other SNTP server. When the relay successfully synchronizes to the primary NTP time server, the TSNTPP Relay Word bit asserts. When the relay successfully synchronizes to the backup NTP time server, the TSNTPB Relay Word bit asserts.

ESNTP := MANYCAST

In the manycast mode of operation, the relay initially sends an NTP request to the broadcast address contained in the SNTPPSIP setting. The relay continues to broadcast requests at a rate defined by the SNTPRATE setting. When a server replies, the relay considers that server to be the primary NTP server, and switches to unicast mode, asserts Relay Word bit TSNTPP, and thereafter requests updates from the primary server. If the NTP server stops responding for time SNTPTO, the relay deasserts TSNTPP and begins to broadcast requests again until the original or another server responds.

ESNTP := BROADCAST

If setting SNTPPSIP := 0.0.0.0 while setting ESNTP := BROADCAST, the relay listens for and synchronizes to any broadcasting NTP server. If the SNTPPSIP setting is set to a specific IP address while setting ESNTP := BROADCAST, then the relay listens for and synchronizes to only NTP server broadcasts from that address. When synchronized, the relay asserts the TSNTPP Relay Word bit. The Relay TNSTPP Word bit deasserts if the relay does not receive a valid broadcast within five seconds after the period defined by the SNTPRATE setting.

SNTP Accuracy Considerations

SNTP time-synchronization accuracy is limited by the accuracy of the SNTP Server and by the networking environment. The highest degree of SNTP time synchronization is achieved by minimizing the number of switches and routers between the SNTP Server and the SEL-2664S. Network monitoring software can also be used to ensure that average and worst-case network bandwidth use is moderate.

When installed on a network configured with one Ethernet switch between the SEL-2664S and the SNTP Server, and when using ESNTP := UNICAST or MANYCAST, the relay time-synchronization error with the SNTP server is typically less than ±1 millisecond.

SEL ASCII Protocol and Commands

Message Format

SEL ASCII protocol is designed for manual and automatic communication. All commands the relay receives must be of the following form:

NOTE: The **<Enter>** key on most keyboards is configured to send the ASCII character 13 (**<Ctrl+M>**) for a carriage return. This manual instructs you to press the **<Enter>** key after commands to send the proper ASCII code to the SEL-2664S.

```
<command><CR>  or  <command><CRLF>
```

A command transmitted to the relay consists of the command followed by either a CR (carriage return) or a CRLF (carriage return and line feed). You can truncate commands to the first three characters. For example, **CEVENT 1 <Enter>** becomes **CEVE 1 <Enter>**. Use upper- and lowercase characters without distinction, except in passwords.

The relay transmits all messages in the following format:

```
<STX><MESSAGE LINE 1><CRLF>
<MESSAGE LINE 2><CRLF>
.
.
.
<LAST MESSAGE LINE><CRLF><ETX>
```

Each message begins with the start-of-transmission character (ASCII 02) and ends with the end-of-transmission character (ASCII 03). Each line of the message ends with a carriage return and line feed.

Software Flow Control

The relay implements XON/XOFF flow control. You can use the XON/XOFF protocol to control the relay during data transmission. When the relay receives XOFF during transmission, it pauses until it receives an XON character. If there is no message in progress when the relay receives XOFF, it blocks transmission of any message presented to the relay input buffer. Messages will be accepted after the relay receives XON.

The relay transmits XON (ASCII hex 11) and asserts the RTS output (if hardware handshaking is enabled) when the relay input buffer drops below 25 percent full.

The relay transmits XOFF (ASCII hex 13) when the buffer is more than 75 percent full. If hardware handshaking is enabled, the relay deasserts the RTS output when the buffer is approximately 95 percent full. Automatic transmission sources should monitor for the XOFF character to avoid overwriting the buffer. Transmission should terminate at the end of the message in progress when XOFF is received and can resume when the relay sends XON.

The CAN character (ASCII hex 18) aborts a pending transmission. This is useful for terminating an unwanted transmission. You can send control characters from most keyboards with the following keystrokes:

- XOFF**: <Ctrl+S>** (hold down the **<Ctrl>** key and press **S**)
- XON: **<Ctrl+Q>** (hold down the **<Ctrl>** key and press **Q**)
- CAN: **<Ctrl+X>** (hold down the **<Ctrl>** key and press **X**)

Automatic Messages

When the serial port AUTO setting is Y, the relay sends automatic messages to indicate specific conditions. *Table 7.5* lists these messages.

Table 7.5 Serial Port Automatic Messages

Condition	Description
Turn On	The relay sends a message containing the present date and time, Relay and Terminal Identifiers, and the Access Level 0 prompt when the relay is turned on.
Event Trigger	The relay sends an event summary each time an event report is triggered. See *Section 9: Analyzing Events*.
Self-Test Warning or Failure	The SEL-2664S sends a status report each time a self-test warning or failure condition is detected. See *STATUS Command (Relay Self-Test Status)* on page 7.33.

Access Levels

Commands can be issued to the SEL-2664S via the serial port or Telnet session to view metering values, change relay settings, etc. The available serial port commands are listed in the *SEL-2664S Command Summary* at the end of this manual. These commands can be accessed only from the corresponding access level, as shown in the *SEL-2664S Command Summary*. The access levels are:

- Access Level 0 (the lowest access level)
- Access Level 1

- Access Level 2 (the highest access level)
- Access Level C (restricted access level; should be used under direction of SEL only)

The EPORT setting provides you with access controls for the corresponding port. Setting EPORT to N disables the port and hides the remaining port settings.

Access Level 0

Once serial port communication is established with the SEL-2664S, the relay sends the following prompt:

```
=
```

This is referred to as Access Level 0. Only a few commands are available at Access Level 0. One is the **ACC** command. See the *SEL-2664S Command Summary* at the end of this manual. Enter the **ACC** command at the Access Level 0 prompt:

```
=ACC <Enter>
```

The **ACC** command takes the SEL-2664S to Access Level 1. See *ACCESS Commands (ACCESS, 2ACCESS, and CAL)* on page 7.17 for more detail.

Access Level 1

When the SEL-2664S is in Access Level 1, the relay sends the following prompt:

```
=>
```

See the *SEL-2664S Command Summary* at the end of this manual for the commands available from Access Level 1. The relay can go to Access Level 2 from this level.

The **2AC** command places the relay in Access Level 2. See *ACCESS Commands (ACCESS, 2ACCESS, and CAL)* on page 7.17 for more detail. Enter the **2AC** command at the Access Level 1 prompt:

```
=>2AC <Enter>
```

Access Level 2

When the relay is in Access Level 2, the SEL-2664S sends the prompt:

```
=>>
```

See the *SEL-2664S Command Summary* at the end of this manual for the commands available from Access Level 2. Any of the Access Level 1 commands are also available in Access Level 2.

Access Level C

The CAL access level is used exclusively by the SEL factory and SEL field service personnel to diagnose troublesome installations. A list of commands available at the **CAL** level is available from SEL upon request. Do not enter the **CAL** access level except as directed by SEL.

The **CAL** command allows the relay to go to Access Level C. Enter the **CAL** command at the Access Level 2 prompt:

```
=>>CAL <Enter>
```

Command Summary

The *SEL-2664S Command Summary* at the end of this manual lists the serial port commands alphabetically.

Access Level Functions

The serial port commands at the different access levels offer varying levels of control:

- The Access Level 0 commands provide the first layer of security. In addition, Access Level 0 supports several commands required by SEL communications processors.
- The Access Level 1 commands are primarily for reviewing information only (settings, metering, etc.), not changing it.
- The Access Level 2 commands are primarily for changing relay settings.
- Access Level C (restricted access level; should be used under direction of SEL only)

The SEL-2664S responds with `Invalid Access Level` when a command is entered from an access level lower than the specified access level for the command. The relay responds with `Invalid Command` to commands that are not available or are entered incorrectly.

Header

Many of the command responses display the following header at the beginning:

```
[RID Setting]                              Date: mm/dd/yyyy  Time: hh:mm:ss.sss
[TID Setting]                              Time Source: external
```

Table 7.6 lists the header items and their definitions.

Table 7.6 Command Response Header Definitions (Sheet 1 of 2)

Item	Definition
`[RID Setting]`:	This is the RID (Relay Identifier) setting. The relay ships with the default setting `RID = SEL-2664S`; see *ID Settings* on page 4.4.
`[TID Setting]`:	This is the TID (Terminal Identifier) setting. The relay ships with the default setting `TID = STATOR GND RELAY`; see *ID Settings* on page 4.4.

Table 7.6 Command Response Header Definitions (Sheet 2 of 2)

Item	Definition
`Date:`	This is the date when the command response was given, except for relay response to the **CEV** command (Event), when it is the date the event occurred. You can modify the date display format (Month/Day/Year, Year/Month/Day, or Day/Month/Year) by changing the DATE_F relay setting.
`Time:`	This is the time when the command response was given, except for relay response to the **CEV** command, when it is the time the event occurred.
`Time Source:`	This is internal if no time-code input is attached and external if an input is attached.

Command Explanations

This section lists ASCII commands alphabetically. Commands, command options, and command variables to enter are shown in bold. Lowercase italic letters and words in a command represent command variables that are determined based on the application. For example, time ***t*** = 1 to 30 seconds, remote bit number ***n*** = 01 to 08, and ***level***.

Command options appear with brief explanations about the command function. Refer to the references listed with the commands for more information on the control function corresponding to the command or examples of the control response to the command.

You can simplify the task of entering commands by shortening any ASCII command to the first three characters; for example, **ACCESS** becomes **ACC**. Always send a carriage return **<CR>** character or a carriage return character followed by a line feed character **<CR><LF>** to command the control to process the ASCII command. Usually, most terminals and terminal programs interpret the Enter key as a **<CR>**. For example, to send the **ACCESS** command, type **ACC <Enter>**.

Tables in this section show the access level(s) where the command or command option is active. Access levels in this device are Access Level 0, Access Level 1, and Access Level 2.

ACCESS Commands (ACCESS, 2ACCESS, and CAL)

The **ACC**, **2AC**, and **CAL** commands (see *Table 7.7*) provide entry to the multiple access levels. Different commands are available at the different access levels, as shown in the *SEL-2664S Command Summary* at the end of this manual. Commands **ACC** and **2AC** are explained together because they operate similarly. See *Access Levels* on page 7.14 for a discussion of placing the relay in an access level.

Table 7.7 ACCESS Commands

Command	Description	Access Level
ACC	Moves from Access Level 0 to Access Level 1.	0
2AC	Moves from Access Level 1 to Access Level 2.	1
CAL	Moves from Access Level 2 to Access Level C.	2

Password Requirements

Passwords are required unless they are disabled. See *PASSWORD Command (Change Passwords)* on page 7.28 for the list of default passwords and for more information on changing and disabling passwords.

Access Level Attempt (Password Required). Assume the following conditions:

- Access Level 1 password is not disabled.
- Access Level is 0.

At the Access Level 0 prompt, enter the **ACC** command:

```
=ACC <Enter>
```

Because the password is not disabled, the relay prompts you for the Access Level 1 password:

```
Password: ?
```

The relay ships with the default Access Level 1 password shown in *PASSWORD Command (Change Passwords)* on page 7.28. At the prompt, enter the default password and press the **<Enter>** key. The relay responds with the following:

```
[RID Setting]                              Date: mm/dd/yyyy  Time: hh:mm:ss
[TID Setting]                              Time Source: external

Level 1
=>
```

The => prompt indicates the relay is now in Access Level 1.

If the entered password is incorrect, the relay prompts you for the password again (`Password: ?`). The relay prompts for the password as many as three times. If the requested password is incorrectly entered three times, the relay pulses the SALARM Relay Word bit for one second and remains at Access Level 0 (= prompt).

Access Level Attempt (Password Not Required). Assume the following conditions:

- Access Level 1 password is disabled.
- Access Level is 0.

At the Access Level 0 prompt, enter the **ACC** command:

```
=ACC <Enter>
```

Because the password is disabled, the relay does not prompt you for a password and goes directly to Access Level 1. The relay responds with the following:

```
[RID Setting]                              Date: mm/dd/yyyy  Time: hh:mm:ss.sss
[TID Setting]                              Time Source: external
Level 1
=>
```

The => prompt indicates the relay is now in Access Level 1.

The two previous examples demonstrate going from Access Level 0 to Access Level 1. The procedure to go from Access Level 1 to Access Level 2 with the **2AC** command entered at the access level screen prompt is similar. Access Level C can be accessed from Access Level 2 with the **CAL** command. The relay pulses the SALARM Relay Word bit for one second after a successful Level 2 or Level C access, or if access is denied.

CEVENT Command

The SEL-2664S provides Compressed ASCII event reports to facilitate event report storage and display. SEL communications processors and SEL-5601-2 SYNCHROWAVE Event Software take advantage of the Compressed ASCII format. Use the **CHIS** command to display Compressed ASCII event history information. Use the **CSUM** command to display Compressed ASCII event summary information. Use the **CEVENT** (**CEV**) command to display Compressed ASCII event reports. See *Table C.2* for further information. Compressed ASCII Event Reports contain all of the Relay Word bits.

COMMUNICATIONS Command

The **COM *x*** command (see *Table 7.8*) displays communications statistics for the MIRRORED BITS communications channels. For more information on MIRRORED BITS communication, see *Appendix G: MIRRORED BITS Communications*. The summary report includes information on the failure of ROKA or ROKB. The Last Error field displays the reason for the most recent channel error, even if the channel was already failed. We define failure reasons as one of the following error types:

- Device disabled
- Framing error
- Parity error
- Overrun
- Re-sync
- Data error
- Loopback
- Underrun

Table 7.8 COM Command (Sheet 1 of 2)

Command	Description	Access Level
COM S A or **COM S B**	Returns a summary report of the last 255 records in the communications buffer for either MIRRORED BITS communications Channel A or Channel B when only one channel is enabled.	1
COM A	Returns a summary report of the last 255 records in the communications buffer for MIRRORED BITS communications Channel A.	1
COM B	Returns a summary report of the last 255 records in the communications buffer for MIRRORED BITS communications Channel B.	1
COM L A	Appends a long report to the summary report of the last 255 records in the communications buffer for MIRRORED BITS communications Channel A.	1
COM L B	Appends a long report to the summary report of the last 255 records in the communications buffer for MIRRORED BITS communications Channel B.	1
COM C	Clears all communications records. If both MIRRORED BITS channels are enabled, omitting the channel specifier (A or B) clears both channels.	1

Table 7.8 COM Command (Sheet 2 of 2)

Command	Description	Access Level
COM C A	Clears all communications records for Channel A.	1
COM C B	Clears all communications records for Channel B.	1

CONTROL Command (Control Remote Bits and Outputs)

Use the **CON** command (see *Table 7.9*) to control outputs (OUT01–OUT04) and remote bits (Relay Word bits RB01–RB08). Remote bits are device variables that you set via port communication only. You can select the control operation from three states: set, clear, or pulse, as described in *Table 7.9*.

Table 7.9 CONTROL Command

Command	Description	Access Level
CON O OUT*xx n*	Pulses an output.	2
CON RB*nn k*	Sets a Remote bit to set, clear, or pulse.	2
Subcommand		
S	Sets Remote bit (ON position).	2
C	Clears Remote bit (OFF position).	2
P	Pulses Remote bit for 1/4 cycle (MOMENTARY position).	2
Parameters		
k	S, C, or P	
n	Pulse duration from 1–30 seconds	
nn	A number from 01–08, representing RB01–RB08	
xx	A number from 01–04, representing OUT01–OUT04	

For example, use the following command to set Remote bit RB05:

```
=>>CON RB05 S <Enter>
```

COUNTER Command (Counter Values)

Use the **COU** command (see *Table 7.10*) to generate the values of the eight counters.

Table 7.10 COUNTER Command

Command	Description	Access Level
COU *n*	Displays current state of device counters *n* times, with a 1/2-second delay between each display	1

CPRO Command (Compressed Profile Report)

The SEL-2664S provides Compressed ASCII profile reports to facilitate profile report storage and display. SEL communications processors and SEL-5601-2 SYNCHROWAVE Event Software take advantage of the Compressed ASCII format. Use the **CPRO** command (see *Figure 5.4* and *Figure 5.5*) to retrieve and

display Compressed ASCII profile report. See *Table C.2* for further information. If no data are stored and a **CPRO** command is issued, the relay responds with `No data available`.

DATE Command (View/Change Date)

Use the **DATE** command (see *Table 7.11*) to view and set the relay date.

Table 7.11 DATE Command

Command	Description	Access Level
DATE	Displays the internal clock date.	1
DATE *date*	Sets the internal clock date (DATE_F set to MDY, YMD, or DMY).	1

The relay can overwrite the date entered by using other time sources such as IRIG. Enter the **DATE** command with a date to set the internal clock date.

Separate the month, day, and year parameters with spaces, commas, slashes, colons, and semicolons. Set the year in 4-digit form (for dates 2000–2099). Configuration setting DATE_F sets the date format.

ETH Command

Use the **ETH** command (Access Level 1) to display the Ethernet port (Port 1) status for the redundant fiber-optic (FX) Ethernet **Port 1A** and **Port 1B** configuration, as shown in *Figure 7.14*.

```
=>>ETH <Enter>

SEL-2664S                                Date: 06/05/2013   Time: 10:41:37
STATOR GND RELAY                         Time Source: Internal

 MAC: 00-30-A7-00-75-6A
 IP ADDRESS: 192.168.1.2
 SUBNET MASK: 255.255.255.0
 DEFAULT GATEWAY: 192.168.1.1

 PRIMARY PORT:  PORT 1A
 ACTIVE PORT:   PORT 1B

            LINK   SPEED  DUPLEX   MEDIA
PORT 1A     Up    100M     Full    FX
PORT 1B     Down   --      --      FX

=>>
```

Figure 7.14 Ethernet Port (PORT 1) Status Report

FCA Command

Use the **FCA** command for the field calibration process for the SEL-2664S Relay. Refer to *Section 10: Testing and Troubleshooting* for details on the command and the field calibration process.

Table 7.12 FCA Command

Command	Description	Access Level
FCA	Performs the manual field calibration procedure.	2
FCA A	Used to perform the automatic field calibration procedure.	2

Table 7.12 FCA Command

Command	Description	Access Level
FCA S	Displays the active field calibration values.	1
FCA C	Resets the active field calibration values.	2
FCA W	Writes the active field calibration values.	2

FILE Command

Use the **FIL** command (see *Table 7.13*) to safely and efficiently transfer files between intelligent electronic devices (IEDs) and external support software (ESS). The **FIL** command ignores the hide rules and transfers visible as well as hidden settings, except the settings hidden by a part number. The **FIL** command is supported if you connect over the serial or Ethernet ports.

Table 7.13 FILE Command

Command	Description	Access Level
FIL DIR	Returns a list of files.	1
FIL READ ***filename***	Transfers settings file *filename* from the relay to the PC.	1
FIL WRITE ***filename***	Transfers settings file *filename* from the PC to the relay.	2
FIL SHOW ***filename***	Filename 1 displays contents of the file *filename*.	1

GOOSE Command

Use the **GOOSE** command to display transmit and receive GOOSE messaging information, which can be used for troubleshooting. The **GOOSE** command variants and options are shown in *Table 7.14*.

Table 7.14 GOOSE Command Variants

Command Variant	Description	Access Level
GOOSE	Displays GOOSE information.	1
GOOSE ***count***	Displays GOOSE information *count* times.	1

The information displayed for each GOOSE IED is described in the following table.

IED	Description
`Transmit GOOSE Control Reference`	This field represents the GOOSE control reference information that includes the IED name, ldInst (Logical Device Instance), LN0 lnClass (Logical Node Class), and GSEControl name (GSE Control Block Name) (e.g., SEL_2664S_1CFG/LLN0GOGooseDSet13).
`Receive GOOSE Control Reference`	This field represents the goCbRef (GOOSE Control Block Reference) information that includes the iedName (IED name), ldInst (Logical Device Instance), LN0 lnClass (Logical Node Class), and cbName (GSE Control Block Name) (e.g., SEL_2664S_1CFG/LLN0GOGooseDSet13).

IED	Description
MultiCastAddr (Multicast Address)	This hexadecimal field represents the GOOSE multicast address.
Ptag	This three-bit decimal field represents the priority tag value, where spaces are used if the priority tag is unknown.
Vlan	This 12-bit decimal field represents the virtual LAN (Local Area Network) value, where spaces are used if the virtual LAN is unknown.
StNum (State Number)	This hexadecimal field represents the state number that increments with each state change.
SqNum (Sequence Number)	This hexadecimal field represents the sequence number that increments with each GOOSE message sent.
TTL (Time to Live)	This field contains the time (in ms) before the next message is expected.
Code	This text field contains warning or error condition text when appropriate that is abbreviated as follows: **Code Abbreviation** — **Explanation** OUT OF SEQUENC — Out of sequence error CONF REV MISMA — Configuration Revision mismatch NEED COMMISSIO — Needs Commissioning TEST MODE — Test Mode MSG CORRUPTED — Message Corrupted TTL EXPIRED — Time to live expired HOST DISABLED — Optional code for when the host is disabled or becomes unresponsive after the **GOOSE** command has been issued
Transmit Data Set Reference	This field represents the DataSetReference (Data Set Reference) that includes the IED name, LN0 lnClass (Logical Node Class), and GSEControl datSet (Data Set Name) (e.g., SEL_2664S_1/LLN0$DSet13).
Receive Data Set Reference	This field represents the datSetRef (Data Set Reference) that includes the iedName (IED name), ldInst (Logical Device Instance), LN0 lnClass (Logical Node Class), and datSet (Data Set Name) (e.g., SEL_2664S_1CFG/LLN0$DSet13).

An example response to the **GOOSE** commands is shown in *Figure 7.15*.

```
#>GOOSE <Enter>

GOOSE Transmit Status

   MultiCastAddr   Ptag:Vlan  StNum      SqNum      TTL    Code
-------------------------------------------------------------------------------
SEL_2664S_2CFG/LLN0$GO$GooseDSet13
   01-0C-CD-01-00-04  4:1     2          20376      50
   Data Set: SEL_2664S_2CFG/LLN0$DSet13

GOOSE Receive Status

   MultiCastAddr   Ptag:Vlan  StNum      SqNum      TTL    Code
-------------------------------------------------------------------------------
SEL_2664S_1CFG/LLN0$GO$NewGOOSEMessage5
   01-0C-CD-01-00-05  4:0     1          100425     160
   Data Set: SEL_2664S_1CFG/LLN0$DSet10

SEL_2664S_1CFG/LLN0$GO$NewGOOSEMessage3
   01-0C-CD-01-00-03  4:0     1          98531      120
   Data Set: SEL_2664S_1CFG/LLN0$DSet05

SEL_2664S_1CFG/LLN0$GO$NewGOOSEMessage2
   01-0C-CD-01-00-02  4:0     1          97486      200
   Data Set: SEL_2664S_1CFG/LLN0$DSet04

SEL_2664S_1CFG/LLN0$GO$NewGOOSEMessage1
   01-0C-CD-01-00-01  4:0     1          96412      190
   Data Set: SEL_2664S_1CFG/LLN0$DSet03

SEL_387E_1CFG/LLN0$GO$NewGOOSEMessage5
   01-0C-CD-01-00-06  4:0     1          116156     140
   Data Set: SEL_387E_1CFG/LLN0$DSet10

SEL_387E_1CFG/LLN0$GO$NewGOOSEMessage4
   01-0C-CD-01-00-05  4:0     1          116041     130
   Data Set: SEL_387E_1CFG/LLN0$DSet06

SEL_387E_1CFG/LLN0$GO$NewGOOSEMessage2
   01-0C-CD-01-00-02  4:0     1          115848     120
   Data Set: SEL_387E_1CFG/LLN0$DSet04

SEL_387E_1CFG/LLN0$GO$NewGOOSEMessage1
   01-0C-CD-01-00-01  4:0     1          115798     150
   Data Set: SEL_387E_1CFG/LLN0$DSet03

=>
```

Figure 7.15 GOOSE Command Response

HELP Command

Use the **HELP** command (see *Table 7.15*) to get a list of commands available at the present access level. You can also get a description of any particular command; type **HELP** followed by the name of the command for help on each command.

Table 7.15 HELP Command

Command	Description	Access Level
HELP	Displays a list of each command available at the present access level with a one-line description.	1
HELP *command*	Displays information on the command *command*.	1

HISTORY Command

Use the **HIS** command (see *Table 7.16*) to view a list of one-line descriptions of relay events or to clear the list (and corresponding event reports) from nonvolatile memory. For more information on event reports, see *Section 9: Analyzing Events*.

Table 7.16 HISTORY Command

Command	Description	Access Level
HIS	Returns event histories with the oldest at the bottom of the list and the most recent at the top of the list.	1
HIS *n*	Returns event histories with the oldest at the bottom of the list and the most recent at the top of the list, beginning at event *n*.	1
HIS C or **R**	Clears/resets the event history and all corresponding event reports from nonvolatile memory.	1

IDENTIFICATION Command

Use the **ID** command (see *Table 7.17*) to extract device identification codes.

Table 7.17 IDENTIFICATION Command

Command	Description	Access Level
ID	Returns a list of device identification codes.	0

The **ID** command report is intended to provide SEL-2664S coded information to other IEDs and external support software. An example response to the **ID** command is shown in *Figure 7.16*. The middle digit of SPECIAL field in the ID report identifies the amplifier version as follows:

- "SPECIAL = * 0 *" indicates Amplifier Version 1.0 (original)
- "SPECIAL = * 1 *" indicates Amplifier Version 2.0

```
=>>ID <Enter>
"FID=SEL-2664S-X283-V0-Z003002-D20220328","093B"
"BFID=BOOTLDR-R501-V0-Z000000-D20140224","0947"
"CID=4243","024A"
"DEVID=SEL-2664S","044F"
"DEVCODE=81","0310"
"PARTNO=2664S01XX83","0522"
"CONFIG=10000000","03E4"
"SPECIAL=010","033F"
"iedName =","0380"
"type =","028F"
"configVersion =","0629"
=>>
```

Figure 7.16 ID Command Response

IRI Command

Use the **IRI** command to direct the relay to read the demodulated IRIG-B time code at the serial port or IRIG-B input (see *Table 7.18*).

Table 7.18 IRI Command

Command	Description	Access Level
IRI	Forces synchronization of internal control clock to IRIG-B time-code input.	1

To force the relay to synchronize to IRIG-B, enter the following command:

```
=>IRI <Enter>
```

If the relay successfully synchronizes to IRIG-B, it sends the following header and access level prompt:

```
SEL-2664S                  Date: 12/10/2013 Time: 08:56:03.190
STATOR GND RELAY           Time Source: external
=>
```

If no IRIG-B code is present at the serial port input or if the code cannot be read successfully, the relay responds with `IRIG-B DATA ERROR`.

If an IRIG-B signal is present, the relay synchronizes its internal clock with IRIG-B. It is not necessary to issue the **IRI** command to synchronize the relay clock with IRIG-B. Use the **IRI** command to determine if the relay is properly reading the IRIG-B signal.

LDP Command (Profile Report)

Use the **LDP** commands (see *Table 7.19*) to view and manage the Profile Report (see *Figure 5.3*). If no data are stored and an **LDP** command is issued, the relay responds with `No data available`.

Table 7.19 LDP Commands

Command	Description	Access Level
LDP *row1 row2* **LDP *date1 date2***	Use the **LDP** command to display a numeric progression of all profile report rows. Use the **LDP** command with parameters to display a numeric or reverse numeric subset of the profile rows.	1
LDP C	Use this command to clear the profile report from nonvolatile memory.	1
Parameters		
row1 row2	Append *row1* to return a chronological progression of the first *row1* rows. Append *row1* and *row2* to return all rows between *row1* and *row2*, beginning with *row1* and ending with *row2*. Enter the smaller number first to display a numeric progression of rows through the report. Enter the larger number first to display a reverse numeric progression of rows.	
date1 date2	Append *date1* to return all rows with this date. Append *date1* and *date2* to return all rows between *date1* and date beginning with *date1* and ending with *date2*. Enter the oldest date first to display a chronological progression through the report. Enter the newest date first to display a reverse chronological progression. Date entries are dependent on the date format setting DATE_F.	

L_D Command (Load Firmware)

Use the **L_D** command (see *Table 7.20*) to load firmware. See *Appendix A: Firmware and Manual Versions* for information on changes to the firmware and instruction manual. See *Appendix B: Firmware Upgrade Instructions* for further details on downloading firmware.

Table 7.20 L_D Command (Load Firmware)

Command	Description	Access Level
L_D	Loads firmware to the relay.	2

Only download firmware to the front port.

LOOPBACK Command

Use the **LOO** command (see *Table 7.21*) to test the MIRRORED BITS communications channel for proper communication. For more information on MIRRORED BITS, see *Appendix G: MIRRORED BITS Communications*. With the transmitter of the communications channel physically looped back to the receiver, the MIRRORED BITS addressing will be wrong and ROK will be deasserted. The **LOO** command tells the MIRRORED BITS software to temporarily expect to see its own data looped back as its input. In this mode, LBOK asserts when error-free data are received. The **LOO** command with just the channel specifier, enables looped back mode on that channel for five minutes, while the inputs are forced to the default values.

Table 7.21 LOO Command

Command	Description	Access Level
LOO	Enables loopback testing of MIRRORED BITS channels.	2
LOO A	Enables loopback on MIRRORED BITS Channel A for the next 5 minutes.	2
LOO B	Enables loopback on MIRRORED BITS Channel B for the next 5 minutes.	2

```
=>>LOO A <Enter>
Loopback will be enabled on Mirrored Bits channel A for the next 5 minutes.
The RMB values will be forced to default values while loopback is enabled.
Are you sure (Y/N)?
=>>
```

If only one MIRRORED BITS port is enabled, the channel specifier (A or B) can be omitted. To enable loopback mode for other than the 5-minute default, enter the required number of minutes (1–5000) as a command parameter. To allow the loopback data to modify the RMB values, include the DATA parameter.

```
=>>LOO 10 DATA <Enter>
Loopback will be enabled on Mirrored Bits channel A for the next 10 minutes.
The RMB values will be allowed to change while loopback is enabled.
Are you sure (Y/N)? N <Enter>
Canceled.
=>>
```

To disable loopback mode before the selected number of minutes, reissue the **LOO** command with the R parameter. The R parameter returns the device to normal operation. If both MIRRORED BITS channels are enabled, omitting the channel specifier in the disable command causes both channels to be disabled.

```
=>>LOO R <Enter>
Loopback is disabled on both channels.
=>>
```

MAC Command

Use the **MAC** command to display the MAC addresses of PORT 1, as shown below.

```
=>>MAC <Enter>
Port 1 MAC Address:  00-30-A7-00-00-00
=>>
```

MET Command (Metering Data)

Use the **MET** command (see *Table 7.22*) to obtain access to the relay metering data.

Table 7.22 MET Command

Command	Description	Access Level
MET *c n*	**Displays metering data.**	1
Parameters		
c	Identifies meter class. **F** Fundamental Metering **MV** SELOGIC Math Variable Metering	
n	Specifies the number of times (1–32767) to repeat the meter response.	

For more information on metering and example responses for each meter class, see *Section 5: Metering and Monitoring*.

PASSWORD Command (Change Passwords)

⚠CAUTION
This device is shipped with default passwords. Default passwords should be changed to private passwords at installation. Failure to change each default password to a private password may allow unauthorized access. SEL shall not be responsible for any damage resulting from unauthorized access.

Use the **PAS** command (see *Table 7.23*) to change existing passwords.

Table 7.23 PASSWORD Command

Command	Description	Access Level
PAS *level new-password*	Sets a password *new-password* for Access Level *level*.	2, C
Parameters		
level	Parameter *level* represents the relay Access Levels 1, 2, or C.	
new-password	New password.	

The factory-default passwords are shown in *Table 7.24*.

Table 7.24 Factory-Default Passwords for Access Levels 1, 2, and C

Access Level	Factory-Default Passwords
1	OTTER
2	TAIL
C	CLARKE

To change the password for Access Level 1 to #Ot3579!ijd7, enter the following command sequence:

```
=>>PAS 1  <Enter>
New PW: ?#Ot3579!ijd7 <Enter>
Confirm PW: ?#Ot3579!ijd7 <Enter>
Password Changed
=>>
```

Similarly, use **PAS 2** to change Level 2 passwords and **PAS C** to change Level C passwords.

Table 7.25 Valid Password Characters

Alpha	A B C D E F G H I J K L M N O P Q R S T U V W X Y Z a b c d e f g h i j k l m n o p q r s t u v w x y z
Numeric	0 1 2 3 4 5 6 7 8 9
Special	! " # $ % & ' ( ) * + , - . / : ; < = > ? @ [\ ] ^ _ ` { | } ~

Passwords can contain as many as 12 characters. Upper- and lowercase letters are treated as different characters. Strong passwords consist of 12 characters, with at least one special character or digit and mixed-case sensitivity, but do not form a name, date, acronym, or word. Passwords formed in this manner are less susceptible to password guessing and automated attacks.

Examples of valid, distinct, and strong passwords are shown below:

- #0t3579!ijd7
- $A24.68&,mvj
- (Ih2dcs)36dn
- *4u-Iwg+?lf-

PING Command

When you are setting up or testing substation networks, it is helpful to determine if the network is connected properly and if the other devices are powered up and configured properly. Use the **PING** command (Access Level 2) to determine if a host is reachable across an IP network and the Ethernet port (Port 1) is functioning or configured correctly. See *Figure 7.17* for a typical **PING** command response.

The command structure is:

PING *x.x.x.x t*

where:

x.x.x.x is the Host IP address and

t is the PING interval in seconds, with a 2 to 255 second range.

The default **PING** interval is one second when t is not specified. The relay sends ping messages to the remote node until you stop the **PING** test by pressing the Q key.

```
==>>PING 10.201.7.52 <Enter>

Press the Q key to end the ping test.

Pinging 10.201.7.52 every 1 second(s):

Reply from 10.201.7.52
Reply from 10.201.7.52
Reply from 10.201.7.52
Reply from 10.201.7.52
Reply from 10.201.7.52
Reply from 10.201.7.52
Ping test stopped.

Ping Statistics for 10.201.7.52
   Packets: Sent = 7, Received = 6, Lost = 1
   Duplicated = 0

==>>
```

Figure 7.17 PING Command Response

PULSE Command

Use the **PULSE** command (see *Table 7.26*) to pulse any of the relay control outputs for a specified time. This function aids you in relay testing and commissioning. If the output is open, the **PUL** command momentarily closes the output; if the output is closed, the **PUL** command momentarily opens the output. The control outputs are OUT*nn*, where *nn* = 01, 02, 03, or 04.

Table 7.26 PUL OUT*nn* Command

Command	Description	Access Level
PUL OUT*nn*	Pulses the output for 1 second.	2
PUL OUT*nn s*	Pulses the output for *s* seconds.	2
Parameters		
nn	Control output number (01–04)	
s	Time in seconds, with a range of 1–30	

QUIT Command

Use the **QUIT** command (see *Table 7.27*) to revert to Access Level 0.

Table 7.27 QUIT Command

Command	Description	Access Level
QUIT	Goes to Access Level 0.	0

Access Level 0 is the lowest access level; the SEL-2664S performs no password check to descend to this level (or to remain at this level).

R_S Command (Restore Factory Defaults)

Use the **R_S** command (see *Table 7.28*) to restore factory-default settings.

Table 7.28 R_S Command (Restore Factory Defaults)

Command	Description	Access Level
R_S	Restores the factory-default settings and passwords and restarts the system.[a]	2

[a] Only available after a settings or critical RAM failure.

SER Command (Sequential Events Recorder Report)

Use the **SER** commands (see *Table 7.29*) to view and manage the Sequential Events Recorder report. If the requested SER report rows do not exist, the relay responds with `No SER data`. See *Section 9: Analyzing Events* for further details on SER reports.

Table 7.29 SER Command (Sequential Events Recorder Report)

Command	Description	Access Level
SER	Use the **SER** command to display a chronological progression of all available SER rows (as many as 1024 rows). Row 1 is the most recently triggered row and row 1024 is the oldest.	1
SER C or **R**	Use this command to clear/reset the SER records.	1
Parameters		
row1	Append *row1* to return a chronological progression of the first *row1* rows. For example, use **SER 5** to return the first five rows.	
row1 row2	Append *row1* and *row2* to return all rows between *row1* and *row2*, beginning with row1 and ending with *row2*. Enter the smaller number first to display a numeric progression of rows through the report. Enter the larger number first to display a reverse numeric progression of rows. For example, use **SER 1 10** to return the first 10 rows in numeric order or **SER 10 1** to return these same items in reverse numeric order.	
date1	Append *date1* to return all rows with this date. For example, use **SER 1/1/2003** to return all records for January 1, 2003.	
date1 date2	Append *date1* and *date2* to return all rows between date1 and date beginning with *date1* and ending with *date2*. Enter the oldest date first to display a chronological progression through the report. Enter the newest date first to display a reverse chronological progression. Date entries are dependent on the date format setting DATE_F. For example, use **SER 1/5/2003 1/7/2003** to return all records for January 5, 6, and 7, 2003.	

SET Command (Change Settings)

Use the **SET** command for viewing or changing the relay settings (see *Table 7.30*).

Table 7.30 SET Command (Change Settings)

Command	Description	Access Level
SET *s* **TERSE**	Sets the relay settings.	2
SET L *s* **TERSE**	Sets the general logic settings.	2
SET P *n s* **TERSE**	Sets the port settings.	2
SET R *s* **TERSE**	Sets the report settings such as Sequential Events Recorder (SER) and Event Report (ER) settings.	2
SET M *s* **TERSE**	Sets the Modbus User Map settings.	2
SET DNP ***m s*** **TERSE**	Sets the DNP Map m settings.	2
Parameters		
m	Settings 1, 2, or 3.	
n	Specifies the Port (1, 2, 3, or F); defaults to the active port if not listed.	
s	Appends *s*, the name of the specific setting you want to view, and jumps to this setting. If *s* is not entered, the relay starts at the first setting.	
TERSE	Append TERSE or TE to skip the settings display after the last setting. Use this parameter to speed up the **SET** command. If you want to review the settings before saving, do not use the TERSE option.	

When you issue the **SET** command, the relay presents a list of settings one at a time. Enter a new setting or press **<Enter>** to accept the existing setting. Editing keystrokes are shown in *Table 7.31*.

Table 7.31 SET Command Editing Keystrokes

Press Key(s)	Results
<Enter>	Retains the setting and moves to the next setting.
^ <Enter>	Returns to the previous setting.
< <Enter>	Returns to the previous setting category.
> <Enter>	Moves to the next setting category.
END <Enter>	Exits the editing session, then prompts you to save the settings.
<Ctrl+X>	Aborts the editing session without saving changes.

The relay checks each setting to ensure that it is within the allowed range. If the setting is not within the allowed range, the relay generates an `Out of Range` message and prompts you for the setting again.

When all the settings are entered, the relay displays the new settings and prompts you for approval to enable them. Answer **Y <Enter>** to enable the new settings. The relay is disabled for as long as one second while it saves the new settings. The SALARM Relay Word bit is set momentarily, and the **ENABLED** LED extinguishes while the relay is disabled.

SHOW Command (Show/View Settings)

Use the **SHOW** command to display the relay settings label and the present value from nonvolatile memory for each setting class. See *Table 7.32* for the **SHOW** command settings and format.

Table 7.32 SHOW Command (Show/View Settings)

Command	Description	Access Level
SHO *s*	Shows the relay settings.	1
SHO L *s*	Shows the general logic settings.	1
SHO P *n s*	Shows the serial port settings.	1
SHO R *s*	Shows the report settings, such as Sequential Events Recorder (SER) and Event Report (ER) settings.	1
SHO M *s*	Shows the Modbus User Map settings.	1
SHO DNP ***m s***	Shows the DNP Map settings *m*.	1
Parameters		
m	Settings 1, 2, or 3.	
n	Specifies the Port (1, 2, 3, or F); defaults to the active port if not listed.	
s	The name of the specific setting you want to view. Jumps to this setting. If *s* is not entered, the relay starts at the first setting.	

```
=>>SHO <Enter>

Group 1
Relay Settings

ID Settings
RID      := SEL-2664S
TID      := STATOR GND RELAY

Config Settings
FNOM     := 60            I_SRC    := 1.0           MODE_SRC := NORM
NGT_RAT  := 1.00          NGR_LOC  := SEC           NGR_TAP  := 100.0
NGR_VAL  := 1.000         CTN_LOC  := SEC           CTN_RAT  := 1000.0
DATE_F   := MDY

Stator Ground 64 Settings
E64S     := 0
64S1P    := 5.0           64S1D    := 20.0
64S1TC   := 1
64S2P    := OFF
VFD_STRT := 0

Stator Ground 59N Settings
59N1P    := 10.0          59N1D    := 1.0
59N1TC   := 1
59NRMSP  := 10.0          59NRMSD  := 1.0
59NRMSTC := 1

NGR Monitor Settings
SHORT_P  := OFF           OPEN_P   := OFF

Rotor Ground
E64F     := N

Trip Logic Settings
TDURD    := 0.1
TR       := 64S1T OR 64F1T OR 59N1T OR 59NRMST
ULTRIP   := NOT TR
WARNING  := 64S2T OR 64F2T OR NOT E64S OR NGROPEN OR NGRSHORT OR CTN_OPEN OR
   AMP_LO


Output Settings
OUT01FS  := Y
OUT01    := HALARM OR SALARM
OUT02FS  := N
OUT02    := TRIP
OUT03FS  := N
OUT03    := WARNING
OUT04FS  := N
OUT04    := 0

Time and Date Management Settings
TIME_SRC := IRIG1         IRIGC    := NONE          UTC_OFF  := 0.00
DST_BEGM := OFF

Data Reset Settings
RSTTRGT  := 0

=>>
```

Figure 7.18 SHOW Command Example

STATUS Command (Relay Self-Test Status)

Use the **STA** command (see *Table 7.33*) to display the status report. See *Figure 7.19* for an example of a status report.

Table 7.33 STATUS Command (Relay Self-Test Status)

Command	Description	Access Level
STA *n*	Displays the relay self-test information *n* times (*n* = 1–32767). Defaults to 1 if *n* is not specified.	1
STA S	Displays the memory and processing time available for the SELOGIC control equations.	1
STA C or **R**	Restarts the relay and clears self-test warning and failure status results.	2

Refer to *Section 10: Testing and Troubleshooting* for self-test thresholds and corrective actions, as well as hardware configuration conflict resolution. *Table 7.34* shows the status report definitions and message formats for each test. Refer to *Figure 1.3* for an example of the **STATUS** command response.

Table 7.34 STATUS Command Report Definitions

STATUS Report Designator	Definition	Message Format
Serial Num	Serial number	Text Data
FID	Firmware identifier string	Text Data
CID	Firmware checksum identifier	Hex
PART NUM	Part number	Text Data
FPGA	FPGA programming unsuccessful, or FPGA failed	OK/FAIL
GPSB	General purpose serial bus	OK/FAIL
RAM	Volatile memory integrity	OK/FAIL
ROM	Firmware integrity	OK/FAIL
CR_RAM	Integrity of settings in RAM and code that runs in RAM	OK/FAIL
NON_VOL	Integrity of data stored in nonvolatile memory	OK/FAIL
CLOCK	Clock functionality	OK/WARN
CID_FILE	Configured IED description file	OK/FAIL
x.x V	Power supply status	Voltage/FAIL
BATT	Clock battery voltage	Voltage/WARN
Amplifier	If Relay Word bit AMP_LO := 1, status is FAIL; If Relay Word bit E64S := 0, status is N/A; else it is OK.	OK/FAIL/NA
Analog Channel Offsets		
IINJ	Warning threshold is ± 100 mV.	OK/WARN
IN	Warning threshold is ± 100 mV.	OK/WARN
VINJX1	Warning threshold is ± 100 mV.	OK/WARN
VINJX10	Warning threshold is ± 100 mV.	OK/WARN
Temperature		
VTEMP	Warning threshold for amplifier stage temperature is below –40°C or above 85°C.	OK/WARN
Amplifier Power Supply Voltage Checks		
VISO_P24	Injection amplifier positive supply rail diagnostics (0 to +35 V) Warning threshold is < 20 V or > 35 V.	OK/WARN
VISO_N24	Injection amplifier negative supply rail diagnostics (0 to –35 V) Warning threshold is < –35 V or > –20 V.	OK/WARN
ADCCHK	Failure is declared when the voltage measured by A/D is < 2.375 V or > 2.625 V for two consecutive samples.	OK/FAIL
COMM	Status of the communications link from the SEL-2664 (requires setting E64F := Y)	OK/FAIL
MODULE	Status of the SEL-2664 (requires setting E64F := Y)	OK/FAIL/NA

Figure 7.19 displays the typical relay output for the **STATUS S** command, showing the available SELOGIC control equation capability.

NOTE: The STA S report gives the available SELOGIC capacity of the relay. For example, Execution 90 percent means that 90 percent of the execution capacity is still available.

```
=>>STA S <Enter>

SEL-2664S                                   Date: 12/16/2013   Time: 11:14:55.303
STATOR GND RELAY                            Time Source: External

Part Number = 2664S01XX83

SELogic Equation Available Capacity

Execution (%)   96
Group (%)       79
Logic (%)       90
Report (%)      98

=>>
```

Figure 7.19 Typical Relay Output for STATUS S Command

SUMMARY Command

Use the **SUM** command (see *Table 7.35*) to display an event summary in human readable format.

Table 7.35 SUMMARY Command

Command	Description	Access Level
SUM *n*	The command without arguments displays the latest event summary. Use *n* to display particular event summary.	1
SUM R or C	Use this command to clear the archive.	1

Each event summary report shows the date, time, current magnitudes (primary values), frequency, and, if the relay has the voltage option, voltage magnitudes (primary values). The relay reports the voltage and current when the largest current occurs during the event. The event summary report also shows the event type (e.g., 64F FLD Gnd Trip).

TARGET Command (Display Relay Word Bit Status)

Use the **TAR** command (see *Table 7.36*) to display the status of front-panel target LEDs or Relay Word bits and whether these LEDs or Relay Word bits are asserted or deasserted.

Table 7.36 TARGET Command (Display Relay Word Bit Status)

Command	Description	Access Level
TAR *name* k **TAR *n*** **TAR *n k***	Use **TAR** without parameters to display Relay Word Row 0 or last displayed target row.	1
TAR R	Clears front-panel tripping targets. Unlatches the trip logic for testing purposes. Shows Relay Word Row 0.	1
Parameters		
name	Displays the Relay Word row with Relay Word bit name.	
n	Shows Relay Word row number *n*.	
k	Repeats *k* times (1–32767).	

NOTE: The **TARGET R** command cannot reset the latched targets if a TRIP condition is present.

The elements are represented as Relay Word bits and are listed in rows of eight, called Relay Word rows. The first four rows, representing the front-panel operation and target LEDs, correspond to *Table 7.37*. All Relay Word rows are described in *Table H.1* and *Table H.2*. Relay Word bits are used in SELOGIC control equations. See *Appendix H: Relay Word Bits*.

The **TAR** command does not remap the front-panel target LEDs, as is done in some previous SEL relays.

Table 7.37 Front-Panel LEDs and the TAR 0 Command

LEDs	7	6	5	4	3	2	1	0
TAR 0	ENABLED	TRIP_LED	WARN_LED	64S_LED	64F_LED	59N_LED	FGM_LED	INJ_LED

TIME Command (View/Change Time)

Use the **TIME** command (see *Table 7.38*) to return information about the SEL-2664S internal clock. You can also set the clock if you specify hours and minutes (seconds data are optional). Separate the hours, minutes, and seconds with colons, semicolons, spaces, commas, or slashes.

Table 7.38 TIME Command (View/Change Time)

Command	Description	Access Level
TIME	Displays the present internal clock time.	1
TIME *hh*	Sets the internal clock to *hh*.	1
TIME *hh:mm*	Sets the internal clock to *hh:mm*.	1
TIME *hh:mm:ss*	Sets the internal clock to *hh:mm:ss*.	1

Use the **TIME *hh:mm*** and **TIME *hh:mm:ss*** commands to set the internal clock time. The value *hh* is for hours from 0–23; the value *mm* is for minutes from 0–59; the value *ss* is for seconds from 0–59. If you enter a valid time, the SEL-2664S updates and saves the time in the nonvolatile clock, and displays the time you just entered. If you enter an invalid time, the SEL-2664S responds with `Invalid Time`.

TRIGGER Command (Trigger Event Report)

Use the **TRI** command (see *Table 7.39*) to trigger the SEL-2664S to record data for high-resolution oscillographs and event reports.

Table 7.39 TRIGGER Command (Trigger Event Report)

Command	Description	Access Level
TRI	Captures trigger event report data.	1

When you issue the **TRI** command, the SEL-2664S responds with `Triggered`. If the event did not trigger within one second, the SEL-2664S responds with `Did not trigger`. *Section 9: Analyzing Events* for further details on event reports.

VEC Command (Show Diagnostic Information)

Issue the **VEC** command under the direction of SEL. The information contained in a vector report is formatted for SEL in-house use only. Your SEL application engineer or the factory may request a **VEC** command capture to help diagnose a relay or system problem.

Table 7.40 VEC Command

Command	Description	Access Level
VEC D	Displays the standard vector report	2
VEC E	Displays the extended vector report	2

This page intentionally left blank

SECTION 8

Target and Operation LEDs

LEDs

The SEL-2664S quickly confirms the conditions of the relay via operation and target LEDs. *Figure 8.1* shows the order, location, and labels of the target and operation LEDs.

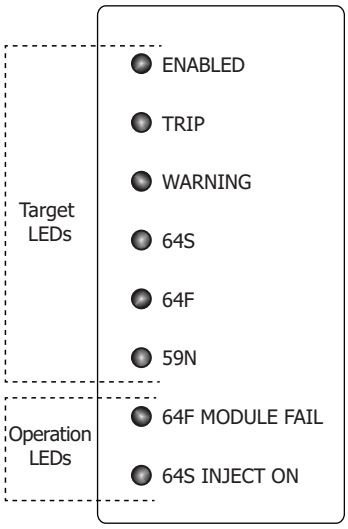

Figure 8.1 Target and Operation LEDs

Figure 8.2 Front and Side Panels

Target LEDs

The target LEDs (**TRIP**, **64S**, **64F**, or **59N**) assert only if a trip condition occurs (rising edge of Relay Word bit TR) and the corresponding protection element asserts. At this point, the LED latches in and can be reset using the **TARGET RESET** pushbutton or the **TAR R** command as long as the target conditions are absent. For a concise listing of the operating conditions on the target LEDs, see *Table 8.1*.

The **ENABLED** LED indicates that the SEL-2664S is powered correctly, is functional, and has no self-test failures. Trip events illuminate the **TRIP** LED. The prominent location of the **TRIP** LED in the top target area aids in recognizing trip events quickly. See *Section 4: Protection and Logic Functions* for additional information on Trip Logic. See *Table 8.1* for the conditions that illuminate target LEDs.

Table 8.1 Target LED Conditions

Target LED	Relay Word Bit Logic Condition
WARNING	SELOGIC control equation WARNING asserted
64S	64S1T OR 64S2T asserted
64F	64F1T OR 64F2T asserted
59N	59N1T OR 59NRMST asserted

Operation LEDs

In addition to the **ENABLED** LED, the SEL-2664S contains two additional operation LEDS. These LEDs and a description of their operation are shown in *Table 8.2*.

Table 8.2 Operation LEDs

Operation LED	Operate Condition
64F MODULE FAIL	Not Receiving Data from the SEL-2664 Module via Port 2 with setting E64F := Y (64FFLT[b] is asserted and setting E64F := Y)
64S INJECT ON[a]	AMP_ON[b] AND NOT SHUTDOWN[b]

[a] The 64S INJECT ON LED flashes to indicate an amplifier lockout.
[b] Relay Word bits.

TARGET RESET Pushbutton

Target Reset

For a trip event, the SEL-2664S latches the trip-involved target LEDs. Press the **TARGET RESET** pushbutton to reset the latched target LEDs. When a new trip event occurs and the previously latched trip targets have not been reset, the SEL-2664S clears the latched targets and displays the new trip targets. The **TARGET RESET** pushbutton also resets Amplifier Control logic if the amplifier is locked out, as indicated by a flashing **64S INJECT ON** LED. Pressing and holding the **TARGET RESET** pushbutton illuminates all the LEDs. Upon release of the **TARGET RESET** pushbutton, two possible trip situations can exist: the conditions that caused the SEL-2664S to trip have cleared, or the trip conditions remain present at the SEL-2664S inputs. If the trip conditions have cleared, the latched target LEDs turn off. If the trip event conditions remain, the SEL-2664S illuminates the corresponding target LEDs.

Figure 8.3 Target Reset Pushbutton

Lamp Test

The **TARGET RESET** pushbutton also provides a front-panel lamp test. Pressing and holding **TARGET RESET** illuminates all the front-panel LEDs, and these LEDs remain illuminated for as long as **TARGET RESET** is pressed. The target LEDs return to a normal operational state after release of the **TARGET RESET** pushbutton.

Other Target Reset Options

Use the ASCII command **TAR R** to reset the target LEDs; see *Table 7.37* for more information. Programming specific conditions in the SELOGIC control equation RSTTRGT is another method for resetting target LEDs. Access RSTTRGT in *Data Reset Setting* on page 4.21, for further information.

This page intentionally left blank

SECTION 9

Analyzing Events

Overview

The SEL-2664S provides several tools (listed below) to analyze the cause of relay operations. Use these tools to help diagnose the cause of the relay operation and more quickly restore the protected generator to service.

- Event Reporting
  - Event Summary Reports
  - Event History Reports
  - Event Reports
- Sequential Events Recorder Report
  - Resolution: 1 ms
  - Accuracy: ±¼ cycle

All reports are stored in nonvolatile memory, ensuring that a loss of power to the SEL-2664S does not result in lost data. Event reports can be downloaded from the relay through any communications port as a Compressed ASCII event using the **CEV** command. The download can occur through the ACSELERATOR QuickSet SEL-5030 Software or with terminal software (see *Section 3: PC Software* or *Section 7: Communications* for details). After downloading the file, the compressed event can be viewed with SEL-5601-2 SYNCHROWAVE Event Software.

Event Reporting

Analyze events with the following event reporting functions:

- Event Summaries—Enable automatic messaging to allow the relay to send event summaries out a serial port when port setting AUTO := Y. A summary provides a quick overview of an event. The summaries can also be retrieved by using the **SUMMARY** command.
- Event History—The relay keeps an index of stored nonvolatile event reports. Use the **HISTORY** command to obtain this index. The index includes some of the event summary information so that the appropriate event report can be identified and retrieved.
- Event Reports—These detailed reports are stored in nonvolatile memory for later retrieval and detailed analysis.

Each time an event occurs, a new summary, history record, and report are created. Event report information includes:

- Date and time of the event
- Individual sample analog inputs (currents, voltages, and impedances)
- Digital states of all Relay Word bits (listed in *Table H.1*)

- Event summary, including the front-panel target states at the time of tripping and event type
- Group, Logic, and Report settings (that were in service when the event was recorded)
- Relay part number and serial number to identify the relay model type

The SEL-2664S provides Compressed ASCII event reports to facilitate event report storage and display. SEL communications processors and SEL-5601-2 SYNCHROWAVE Event Software take advantage of the Compressed ASCII format. Use the **CHIS** command to display Compressed ASCII event history information. Use the **CSUM** command to display Compressed ASCII event summary information. Use the **CEVENT** command to display Compressed ASCII event reports. See *Table C.2* for further information.

Sequential Events Recorder (SER)

The SER report captures digital element state changes over time. Settings allow as many as 96 Relay Word bits to be monitored, in addition to the automatically generated triggers for relay turn on and settings changes. State changes are time-tagged to the nearest millisecond. SER information is stored when state changes occur.

SER report data are useful in commissioning tests and during operation for system monitoring and control.

Event Reporting

Length

The SEL-2664S provides a fixed event report length of 180 cycles (LER) and a prefault length of 120 cycles (PRE). All events captured by the SEL-2664S contain 120 cycles of analog and digital data prior to the trigger of the event, and 60 cycles of analog and digital data after the trigger of the event (See *Figure 9.1*).

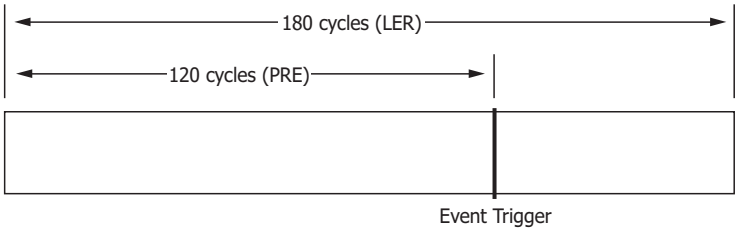

Figure 9.1 Data Capture/Event Report Times

Triggering

The SEL-2664S triggers (generates) an event report when any of the following occur:

- Relay Word bit TRIP asserts
- Programmable SELOGIC® control equation setting ER asserts (in Report settings)
- **TRI** (Trigger Event Reports) serial port command executes

Relay Word Bit TRIP

Refer to *Figure 4.10*. If Relay Word bit TR asserts to logical 1, an event report is automatically generated. Thus, any Relay Word bit that causes a trip does *not* have to be entered in SELOGIC control equation setting ER.

Programmable SELOGIC Control Equation Setting ER

The programmable SELOGIC control equation event report trigger setting ER is set to trigger event reports for conditions other than trip conditions (see **SET R** in *SET Command (Change Settings)* on page 7.31). When setting ER detects a logical 0 to logical 1 transition, it generates an event report (if the SEL-2664S is not already generating a report that encompasses the new transition). The factory setting is shown in *Event Report Settings* on page 4.36.

TRI (Trigger Event Report) Command

The sole function of the **TRI** serial port command is to generate event reports, primarily for testing purposes. See *TRIGGER Command (Trigger Event Report)* on page 7.36 for more information on the **TRI** (Trigger Event Report) command.

Event Summaries

IMPORTANT: Clearing the HISTORY report with the **HIS C** command also clears all event data within the SEL-2664S event memory.

For every triggered event, the relay generates and stores an event summary. The relay stores at least the 19 most recent event summaries. When the relay stores a new event summary, it discards the oldest event and event summary if the event memory is full. Event summaries contain the following information:

- Relay and Terminal Identification (RID and TID)
- Event number, date, time, event type, and targets (see *Figure 9.1*)
- Resistance and capacitance of the stator winding measured by the relay using the injected frequencies as well as the neutral grounding resistor
- Voltage and current measured at the neutral winding as well as the current injected into the winding

The relay includes the event summary in the Compressed ASCII event report. The summary data can be viewed by using the **SUM** command as shown in *Figure 9.2*. The data from the example event summary in *Figure 9.2* can also be seen when the Compressed ASCII event report is viewed with SYNCHROWAVE Event software. See *Table 9.1* for information on the **SUM** command.

The analog sample row that is used for the SUMMARY report is specified by a greater than sign (">") in the corresponding compressed event report. A greater than sign (">") is inserted at the row where either a rising edge of Relay Word bit ER, a rising edge of Relay Word bit TRIP, or the **TRIGGER** command is detected (See *Figure 9.3*).

NOTE: The neutral voltages (VN and VN_RMS) in summary reports (**SUM**, **CEV** commands and SYNCHROWAVE summary) represent voltage at NGR Tap (similar to MET report). When NGR_TAP is set below 100 percent, you can scale-up the values by the NGR_TAP if equivalent values at NGT secondary are desired.

```
=>>SUM <Enter>

SEL-2664S                                Date: 09/26/2013   Time: 16:31:26.724
STATOR GND RELAY

Serial No = 000000000000000
FID = SEL-2664S-X102-V0-Z001001-D20130923              CID = 0000

Event:   Trigger
Targets  11011111

Stator Insulation Resistance (kOhm)    10.00
Stator Insulation Capacitance (uF)    100.00
Neutral Ground Resistor (Ohm)         110.00


Neutral Voltage (V sec)     0.00

Injected Current (A sec)     0.00
Neutral Current (A sec)      0.00

=>
```

Figure 9.2 Example Event Summary

Table 9.1 SUM Command

Command	Description
SUM	Return the most recent event summary.
SUM *n*	Return a particular *n* event summary.

The relay sends event summaries to all serial ports with setting AUTO := Y each time an event triggers.

Event Type

The `Event` field displays the event type. Event types and the logic used to determine event types are shown in *Table 9.2*.

Table 9.2 Event Types

Type	Condition
`64S STR Gnd Trip`	T02_LED AND R_TRIG TRIP
`64F FLD Gnd Trip`	T03_LED AND R_TRIG TRIP
`59N STR Gnd Trip`	T04_LED AND R_TRIG TRIP
`Trigger` `ER Trigger`	Trigger Command
`Trip`	TRIP with no known cause

Currents and Voltages

NOTE: In most applications, the VN voltage at the relay terminals is synonymous with neutral grounding transformer (NGT) secondary. The SEL-2664S scales-up the relay terminal VN samples by 100/NGR_TAP so that the sampled magnitudes, VN1, and VN3 reported in the event report remain synonymous with NGT secondary.

The relay determines the neutral voltage as measured at the relay terminals (VN/NN). This is labeled as VN_V in the event report. In addition the relay measures the neutral current (IN) in the CBCT. This is shown as IN_A in the event report. Along with the current measured through the CBCT, the relay also measures the current that it injects into the generator ground. This is shown as ISRC_A in the event report. See *Section 2: Installation* for a complete description of the SEL-2664S inputs.

Resistance and Capacitance

The relay determines the stator ground voltage and capacitance using each of the two or four injected frequencies (See MODE_SRC Setting in *Table 4.4*). The value for the resistance and capacitance as measured by the four frequencies can be viewed in the compressed event report with SYNCHROWAVE Event software. The summary report shows the stator insulation resistance measured when the event was triggered (">").

```
=>CEV <Enter>
"FID","CEV_VER","PART_NUM","SER_NUM","097C"
"FID=SEL-2664S-X294-V0-Z003002-D20220824","2.0.1","2664S01XX83","210245-EUT114","10FD"
"MONTH","DAY","YEAR","HOUR","MIN","SEC","MSEC","0ACA"
9,9,2022,10,52,56,239,"043D"
"REC_NUM","NUM_CH_A","NUM_CH_D","NFREQ","SAM/CYC_A","SAM/
   CYC_D","NUM_OF_CYC","PRIM_VAL","EVENT","ISRC_A_sec","IN_A_sec","VN_V_sec","VN1_V_sec","VN3_V_sec","VN_R
   MS_sec","IN3_A_sec","INS_RES_kOhm","INS_CAP_uF","RES1_kOhm","RES2_kOhm","RES3_kOhm","RES4_kOhm","*","48
   A3"
4,14,264,60,32,32,181,"NO","Trigger",0.0134,0.0447,0.0209,0.0000,0.0100,0.0200,0.0000,99.9900
   ,0.0000,99.9900,99.9900,99.9900,99.9900,20000.0000,"1DD2"
"ISRC_A_sec","IN_A_sec","VN_V_sec","VN1_V_sec","VN3_V_sec","VN_RMS_sec","IN3_A_sec","INS_RES_kOhm","INS_CA
   P_uF","RES1_kOhm","RES2_kOhm","RES3_kOhm","RES4_kOhm","*","TRIG","E64S 64S1 64S1T 64S2 64S2T AMP_ON
   AMP_LO SHUTDOWN EN_RETRY CNT_FULL DCSW_STS OUT_OPEN 59N1 59N1T 59NRMS 59NRMST 64F1C 64F1 64F1T 64F2C
   64F2 64F2T 64FFLT VN3HIGH TRIP TR ULTRIP TRGTR * * * * NGRSHORT NGROPEN LOW_ISRC AMP_RAIL CTN_OPEN
   IN_CLIP * * IN01 IN02 * * * P_LOGIC1 P_LOGIC2 VFD_STRT * * * * OUT04 OUT03 OUT02 OUT01 RELAY_EN *
   WARNING * * TESTDB * * ER * RSTTRGT * * * * * 64S1TC 64S2TC 59N1TC 59NRMSTC 64F1TC 64F2TC * * LT01 LT02
   LT03 LT04 LT05 LT06 LT07 LT08 SV01 SV02 SV03 SV04 SV05 SV06 SV07 SV08 SV01T SV02T SV03T SV04T SV05T
   SV06T SV07T SV08T SC01QU SC02QU SC03QU SC04QU SC05QU SC06QU SC07QU SC08QU SC01QD SC02QD SC03QD SC04QD
   SC05QD SC06QD SC07QD SC08QD RB01 RB02 RB03 RB04 RB05 RB06 RB07 RB08 VB001 VB002 VB003 VB004 VB005 VB006
   VB007 VB008 VB009 VB010 VB011 VB012 VB013 VB014 VB015 VB016 VB017 VB018 VB019 VB020 VB021 VB022 VB023
   VB024 VB025 VB026 VB027 VB028 VB029 VB030 VB031 VB032 HALARM * * * * * * * SALARM * * * MATHERR * * * *
   LINKA LINKB LINKFAIL PASEL PBSEL * * TSOK DST DSTP LPSEC LPSECP IRIGOK * * TSNTPB TSNTPP TUTCS TUTC1
   TUTC2 TUTC4 TUTC8 TUTCH T01_LED T02_LED T03_LED T04_LED T05_LED T06_LED * * RMB8A RMB7A RMB6A RMB5A
   RMB4A RMB3A RMB2A RMB1A TMB8A TMB7A TMB6A TMB5A TMB4A TMB3A TMB2A TMB1A RMB8B RMB7B RMB6B RMB5B RMB4B
   RMB3B RMB2B RMB1B TMB8B TMB7B TMB6B TMB5B TMB4B TMB3B TMB2B TMB1B LBOKB CBADB RBADB ROKB LBOKA CBADA
   RBADA ROKA * * * * * * * * * * * * * * *","7D8C"
0.000,0.067,-0.010,0.000,0.010,0.021,0.000,99.99,0.00,99.99,99.99,99.99,99.99,20000.00,
   ,"01200020200204A0003C000000000000000000000000480000800000000000000","1E25"
0.000,0.089,-0.052,0.000,0.010,0.021,0.000,99.99,0.00,99.99,99.99,99.99,99.99,20000.00,
   ,"01200020200204A0003C000000000000000000000000480000800000000000000","1E2F"
0.002,-0.022,-0.021,0.000,0.010,0.021,0.000,99.99,0.00,99.99,99.99,99.99,99.99,20000.00,
   ,"01200020200204A0003C000000000000000000000000480000800000000000000","1E4D"
-0.001,-0.045,0.010,0.000,0.010,0.021,0.000,99.99,0.00,99.99,99.99,99.99,99.99,20000.00,
   ,"01200020200204A0003C000000000000000000000000480000800000000000000","1E4F"
.
.
.
.
-0.004,0.000,0.000,0.021,0.010,0.021,0.000,99.99,0.00,99.99,99.99,99.99,99.99,20000.00,
   ,"850000202002088003C008000000080000000000000480000000000000000000","1E2B"
-0.074,0.022,-0.010,0.021,0.010,0.021,0.000,99.99,0.00,99.99,99.99,99.99,99.99,20000.00,
   ,"850000202002088003C008000000080000000000000480000000000000000000","1E64"

-0.326,-0.223,-0.115,0.021,0.010,0.021,0.000,99.99,0.00,99.99,99.99,99.99,99.99,20000.00,
   ">","850000202002088003C008000000080000000000000480000000000000000000","1F04"

-0.673,-0.514,-0.177,0.094,0.010,0.042,0.000,99.99,0.00,99.99,99.99,99.99,99.99,20000.00,
   ,"850000202002088003C008000000080000000000000480000000000000000000","1EBF"
.
.
.
.
0.468,0.134,0.104,0.720,0.042,1.305,0.000,12.69,0.77,99.99,27.18,99.99,7.95,20000.00,
   ,"840000200002088000FC008080000080000000000000480000040000000000000","1DF1"
0.086,-0.201,0.063,0.720,0.042,1.305,0.000,12.69,0.77,99.99,27.18,99.99,7.95,20000.00,
   ,"840000200002088000FC008080000080000000000000480000040000000000000","1E19"
-0.308,-0.692,-0.052,0.720,0.042,1.305,0.000,12.69,0.77,99.99,27.18,99.99,7.95,20000.00,
   ,"840000200006088000FC008080000080000000000000480000040000000000000","1E80"
"SETTINGS","02E1"
```

Trigger Row

Figure 9.3 Compressed Event Report Summary and Trigger Row

```
Group Settings

RID     := SEL-2664S
TID     := STATOR GND RELAY
FNOM    := 60      I_SRC   := 5.0     MODE_SRC:= P_LOGIC NGT_RAT := 115.00
NGR_LOC := SEC     NGR_VAL := 0.300   NGR_TAP := 100.0   CTN_LOC := PRIM
CTN_RAT := 500.0   DATE_F  := MDY
E64S    := RB01
64S1P   := OFF     64S2P   := OFF     VFD_STRT:= 0
P_LOGIC1:= SV01T
P_LOGIC2:= NOT IN02

59N1P   := 10.0    59N1D   := 1.0     59N1TC  := 1
59NRMSP := 15.0    59NRMSD := 1.0     59NRMSTC:= 1

SHORT_P := OFF     OPEN_P  := OFF

E64F    := N

TDURD   := 0.1     TR      := 64S1T OR 64F1T OR 59N1T OR 59NRMST
ULTRIP  := NOT TR
WARNING := 64S2T OR 64F2T OR NOT E64S OR NGROPEN OR NGRSHORT OR CTN_OPEN OR AMP_LO OR IN_CLIP

OUT01FS := Y       OUT01   := HALARM OR SALARM
OUT02FS := N       OUT02   := TRIP
OUT03FS := N       OUT03   := WARNING
OUT04FS := N       OUT04   := NOT DCSW_STS OR EN_RETRY # AMPLFIER IN SERVICE

TIME_SRC:= IRIG1   IRIGC   := NONE    UTC_OFF := 0.00    DST_BEGM:= OFF
RSTTRGT := 0

Report Settings

ESERDEL := N

SER1    := E64S 64S1 64S1T 64S2 64S2T AMP_ON AMP_LO SHUTDOWN EN_RETRY CNT_FULL
59N1 59N1T 59NRMS 59NRMST 64F1 64F1T 64F2 64F2T 64FFLT LOW_ISRC OUT_OPEN
DCSW_STS VN3HIGH
SER2    := TR TRIP ULTRIP TRGTR RSTTRGT OUT01 OUT02 OUT03 OUT04 IN01 IN02
WARNING
SER3    := NGRSHORT NGROPEN HALARM SALARM IRIGOK IN_CLIP
SER4    := SV01T P_LOGIC1 P_LOGIC2

EALIAS  := 10

ALIAS1  :=E64S 64S_ELEMENT ENABLED DISABLED
ALIAS2  :=AMP_ON AMPLIFIER ENABLED DISABLED
ALIAS3  :=AMP_LO AMP_LOCKOUT YES NO
ALIAS4  :=SHUTDOWN AMP_SHUTDOWN YES NO
ALIAS5  :=EN_RETRY AMP_RETRY ACTIVE RESET
ALIAS6  :=CNT_FULL AMP_RETRY_COUNT FULL NOT_FULL
ALIAS7  :=LOW_ISRC INJCT_CURRENT LOW NORMAL
ALIAS8  :=OUT_OPEN INJCT_TERMINALS OPEN OK
ALIAS9  :=DCSW_STS AMP_DC_SWITCH OPEN CLOSE
ALIAS10 :=IN_CLIP NEUT_CURR_CLIP YES NO

ER      := R_TRIG DCSW_STS OR F_TRIG DCSW_STS OR R_TRIG P_LOGIC1 OR F_TRIG P_LOGIC1 OR R_TRIG P_LOGIC2 OR
   F_TRIG P_LOGIC2 OR F_TRIG OUT04

PROFLIST:= INS_RES INS_CAP I_SRC VN3_MAG VN_RMS IN3_MAG IN_RMS MES_NGR INS_RES1
INS_RES2 INS_RES3 INS_RES4 PROFAR  := 0.1     PROFAR  := 0.1

Logic Settings

ELAT    := N       ESV     := 1       ESC     := N       EMV     := N

SV01PU  := 1.00    SV01DO  := 0.00
SV01    := NOT DCSW_STS # AMPLFIER IN SERVICE

Field calibration constants:
              18Hz               24Hz              36Hz              48Hz
Z_WIRE =  0.0470-j0.0000  0.0475+j0.0006  0.0473+j0.0011  0.0474+j0.0016
Z_SHORT = 0.0230+j0.0016  0.0227+j0.0016  0.0228+j0.0021  0.0226+j0.0026
Z_OPEN =  0.0000+j0.0000  0.0000+j0.0000  0.0000+j0.0000  0.0000+j0.0000

Neutral CT Input: Not Inverted

=>>
```

Figure 9.3 Compressed Event Report Summary and Trigger Row (Continued)

Event History

The event history report gives you a quick look at recent relay activity. The relay labels each new event in reverse chronological order with 1 as the most recent event. See *Figure 9.4* for a sample event history. Use this report to view the events that are presently stored in the SEL-2664S.

The event history contains the following:

- Standard report header
  - Relay and terminal identification
  - Date and time of report
  - Time source (if IRIG-B model)
- Event number, date, time, event type (see *Figure 9.4*)
- Insulation Resistance
- Insulation Capacitance
- Target LED status

```
=>>HIS <Enter>

SEL-2664S                                Date: 09/27/2013   Time: 15:01:34.527
STATOR GND RELAY                         Time Source: Internal

FID = SEL-2664S-X102-V0-Z001001-D20130923
```

#	DATE	TIME	EVENT	INS_RES	INS_CAP	TARGETS
1	09/26/2013	16:31:26.724	Trigger	710.7	156.0	10000011
2	09/26/2013	16:19:24.571	ER Trigger	122.1	123.9	10000011
3	09/26/2013	16:10:17.410	64S STR Gnd Trip	10.2	27.2	11010011
4	09/26/2013	16:04:23.820	59N STR Gnd Trip	9999.0	1374.2	11000111
Event #	Event Date	Event Time	Event Type	Insulation Resistance	Insulation Capacitance	Target LEDs

Figure 9.4 Sample Event History

Viewing the Event History

Access the history report from the communications ports, using the **HIS** command or the analysis menu within ACSELERATOR QuickSet® SEL-5030 Software. View and download history reports from Access Level 1 and higher.

Use the **HIS** command from a terminal to obtain the event history. You can specify the number of the most recent events that the relay returns. See *Table 9.3* for information on the **HIS** command.

Table 9.3 HIS Command

Command	Description
HIS	Return event histories with the oldest at the bottom of the list and the most recent at the top of the list.
HIS *k*	Return the *k* most recent event summaries with the oldest at the bottom of the list and the most recent at the top of the list.
HIS *date1*	Return the event summaries on date *date1*[a].
HIS *date1 date2*	Return the event summaries from *date1* to *date2*, with *date1* at the bottom of the list and *date2* at the top of the list.
HIS C	Clear all event data.
HIS R	Clear all event data.

[a] Use the same date format as Group setting DATE_F.

Use the front-panel `MAIN > Events > Display Events` menu to display event history data on the SEL-2664S front-panel display.

Use QuickSet to retrieve the relay event history. View the **Relay Event History** dialog box via the **Analysis > Get Event Files** menu.

Clearing

Use the **HIS C** command to clear or reset history data from Access Levels 1 and higher. Clear/reset history data at any communications port. This will clear all event summaries, history records, and reports.

Event Reports

The latest event reports are stored in nonvolatile memory. Each Compressed ASCII event report includes the following:

- Analog values of neutral current, neutral voltage, insulation resistance, and insulation capacitance
- Digital states of the protection and control elements, including the status of digital output and input states
- Event Summary (includes relay model number and serial number)
- Settings in service at the time of event retrieval, consisting of Group, Logic, and Report settings classes

Use the **CEV** command to retrieve the reports. There are several options to customize the report format (see *Table 9.4* and *Table 9.5*).

Table 9.4 CEV Command

Command	Description
CEV[a]	Returns the most recent raw event report (including settings and summary) at full length with 32-samples-a-cycle data
CEV *n*	Returns a particular *n* event report (including settings and summary) at full length with 32-samples-a-cycle data
CEV R[a]	Returns a raw event report with 32-samples-a-cycle data
CEV R *n*	Returns a particular *n* event report (including settings and summary) with 32-samples-a-cycle data

[a] The **CEV** and **CEV R** commands return identical raw event reports.

Table 9.5 CEV Command Examples

Example	Description
CEV 5	For the fifth most recent raw event, returns the event report with 32-samples-a-cycle data
CEV 2 R	For the second most recent raw event, returns the event report with 32-samples-a-cycle data

Event Report Definitions

Refer to the example event report in *Figure 9.5* to view a CEV report opened in SYNCHROWAVE Event software. See *Table 9.6* for a list of event report quantities.

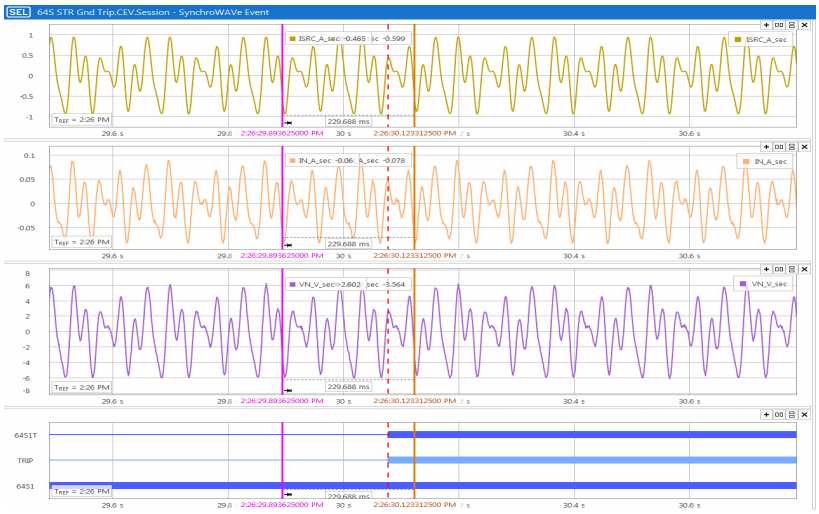

Figure 9.5 Example of an Event Report Opened in SYNCHROWAVE Event Software

Table 9.6 Event Report Quantities

SYNCHROWAVE Event Report Analog Channels	Description
ISRC (A)	Instantaneous Injected Current in A secondary
IN (A)	Instantaneous IN Neutral Current in A secondary
VN (V)	Instantaneous VN Neutral Voltage in V secondary
VN1 (V)	Fundamental Neutral Voltage in V secondary
VN3 (V)	Third-Harmonic Neutral Voltage in V secondary
VN_RMS (V)	Neutral RMS Voltage in V secondary (at NGR tap)
IN3 (A)	Third-Harmonic Neutral Current in A secondary
INS_RES (kOhm)	Stator Insulation Resistance in kOhm primary
INS_CAP (uF)	Stator Insulation Capacitance in uF primary
RES1 (kOhm)	INS_RES1 (15 Hz/18 Hz Stator Insulation in kilohms primary)
RES2 (kOhm)	INS_RES2 (20 Hz/24 Hz Stator Insulation in kilohms primary)
RES3 (kOhm)	INS_RES3 (30 Hz/36 Hz Stator Insulation in kilohms primary)
RES4 (kOhm)	INS_RES4 (40 Hz/48 Hz Stator Insulation in kilohms primary)
F_RES (kOhm)	FLDRES (Field Insulation Resistance in kilohms primary)

NOTE: The neutral voltage analog channels VN, VN1, and VN3 always reflect NGT secondary; they are scaled-up if NGR_TAP < 100 percent. However, VN_RMS always reflects the relay terminal voltage. VN_RMS is not affected by the NGR_TAP setting.

Sequential Events Recorder (SER) Report

The SER report captures relay element state changes over an extended period. SER report data are useful in commissioning tests and root-cause analysis studies. SER information is stored when state changes occur. The report records the most recent 1024 state changes if a relay element is listed in the SER trigger equations.

SER Triggering

Settings SER1 through SER4 are used to select entries in the SER report. To capture relay element state changes in the SER report, the relay element name must be programmed into one of the four SER trigger equations. Each of the four programmable trigger equations allows entry of as many as 24 relay elements; the SER report can monitor a total of 96 relay elements.

The relay adds a message to the SER to indicate turn on or settings change conditions:

```
Relay newly powered up or settings changed
```

Each entry in the SER includes the SER row number, date, time, element name, and element state.

SER Aliases

You can rename as many as 20 of the SER trigger conditions using the ALIAS settings. For instance, the factory-default setting Alias 1 renames Relay Word bit 64F1T for reporting in the SER:

```
ALIAS1:= 64F1T FIELD_IMPEDANCE LOW NORMAL
```

When Relay Word bit 64F1T is asserted, the SER report shows the date and time of FIELD_IMPEDANCE LOW. When Relay Word bit 64F1T is deasserted, the SER report shows the date and time of FIELD_IMPEDANCE NORMAL. With this and other alias assignments, the SER record is easier for the operator to review. See *Relay Word Bit Aliases* on page 4.35 for additional details.

Retrieving and Clearing SER Reports

See *SER Command (Sequential Events Recorder Report)* on page 7.30 for details on the **SER** command.

Example SER Report

The example SER report in *Figure 9.6* includes records that use the alias for the 64F1T Relay Word bit.

```
=>>SER <Enter>

SEL-2664S                                Date: 10/16/2013   Time: 16:50:44.501
STATOR GND RELAY                         Time Source: Internal

Serial No = 000000000000000
FID = SEL-2664S-X104-V0-Z001001-D20131003              CID = 3C9E

#     DATE         TIME              ELEMENT              STATE
7  10/16/2013  16:45:12.960   Relay Powered Up
6  10/16/2013  16:45:12.960   FIELD_IMPEDANCE           LOW
5  10/16/2013  16:45:12.960   OUT03                     Asserted
4  10/16/2013  16:45:28.011   SALARM                    Asserted
3  10/16/2013  16:45:28.015   OUT01                     Asserted
2  10/16/2013  16:45:29.011   SALARM                    Deasserted
1  10/16/2013  16:45:29.016   OUT01                     Deasserted

=>>
```

Figure 9.6 Example Sequential Events Recorder (SER) Event Report

SECTION 10

Testing and Troubleshooting

Overview

Relay testing is typically divided into two categories:

- Tests performed at the time the relay is installed or commissioned
- Tests performed periodically once the relay is in service

This section provides information on both types of testing for the SEL-2664S. Because the SEL-2664S is equipped with extensive self-tests, traditional periodic test procedures can be eliminated or greatly reduced.

Should a problem arise during either commissioning or periodic tests, the section on *Troubleshooting* on page 10.20 provides a guide to isolating and correcting the problem.

Testing Tools

Serial Port Commands

The following serial port commands assist you during relay testing.

The **METER** command shows the ac currents and voltages. Compare these quantities against other devices of known accuracy. The **METER** command is available at the serial ports. See *Section 7: Communications* and *Section 8: Target and Operation LEDs*.

NOTE: The **LDP**, **CPRO**, and **FCA S** commands can also be useful during testing, see *Command Summary* on page 7.16 for details.

The relay generates a 180-cycle event report in response to faults or disturbances. Each report contains current, voltage, and other pertinent analog information, relay element states, and input/output contact information. If you question the relay response or your test method, use the event report for more information. The **EVENT** command is available at the serial ports. See *Section 9: Analyzing Events*.

The relay provides a Sequential Events Recorder (SER) event report that time-tags changes in relay element and input/output contact states. The SER provides a convenient means to verify the pickup/dropout of any element in the relay. The **SER** command is available at the serial ports. See *Section 9: Analyzing Events*.

Use the **TARGET** command to view the state of relay control inputs, relay outputs, and relay elements individually during a test. The **TARGET** command is available at the serial ports. See *Section 7: Communications* and *Section 8: Target and Operation LEDs*.

Commissioning Tests

SEL performs a complete functional check and calibration of each SEL-2664S before it is shipped. This helps to ensure that you receive a relay that operates correctly and accurately. Traditional commissioning tests confirm that the relay is properly connected to the generator and all auxiliary equipment. Additionally, run the field calibration procedure to account for installation-specific parameters.

NOTE: Do not inject current into the IN input of the SEL-2664S using a relay test set as damage can result.

The following connection tests help you enter settings into the SEL-2664S and verify that the relay is properly connected. Brief functional tests ensure that the relay settings are correct. It is unnecessary to test every element, timer, and function in these tests. Modify the procedure as necessary to conform to your standard practices. Use the procedure at initial relay installation and also if the injection circuit wires (relay terminals D02/D01 to NGR) are disturbed.

Required Equipment

- The SEL-2664S, installed and connected according to your protection design
- A PC with serial port, terminal emulation software, and serial communications cable
- *SEL-2664S Settings Sheets* with settings appropriate to your application and protection design
- The ac and dc elementary schematics and wiring diagrams for this relay installation
- SEL-4664 Calibration Module and commonly available test leads and alligator clips (required for auto calibration, see *Figure 10.1* and *Figure 10.2*).

Figure 10.1 SEL-4664 Calibration Module

Figure 10.2 Typical Test Leads and Alligator Clips

Battery and Fuse Replacement (SEL-4664 Only)

Battery Replacement

Step 1. Open the battery compartment (see *Figure 10.3*).

Step 2. Remove the old battery.

Step 3. Insert a fresh 9 V battery.

Step 4. Verify that the polarity matches what is imprinted on the battery compartment.

Fuse Replacement

Step 1. Use a flathead screwdriver to gently twist the fuse cap until it pops out.

Step 2. Pull out on the cap and then gently pull on the fuse on the backside of the cap to remove.

Step 3. Insert a fresh fuse (EATON BK/AGC-3-R) and put the fuse assembly back in place.

Step 4. Gently push on the fuse and twist the fuse cap closed.

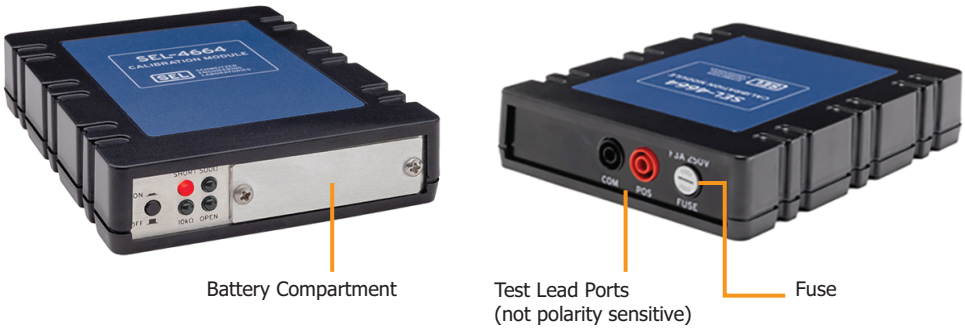

Figure 10.3 SEL-4664 Calibration Module

Field Calibration Process

Field calibration is required for accurate measurements that take into account the installation-specific impedances. Use the SEL-4664 and command **FCA A** to ensure the published accuracies. The procedure is run once the unit has been fully installed but offline (and preferably GSU-winding connected), with all settings (NGT_RAT, NGR_LOC, NGR_TAP, CTN_LOC, and CTN_RAT) consistent with the actual installation details. Take the configuration when both neutral grounding resistor and neutral CBCT are on the secondary side of the transformer as an example. The circuit simplification is shown in *Figure 10.4*.

NOTE: Field calibration is required for all applications. The field calibration procedure must be repeated if any changes are made to the application including CBCT location, NGR location, NGR_TAP setting, NGR ratings, and any changes in the cabling.

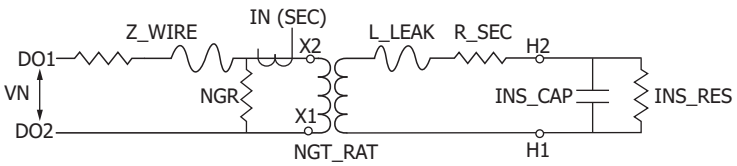

Figure 10.4 Grounding Circuit Topology With Grounding Resistor on the Secondary Side

With the field calibration process, the relay can calculate an accurate representation of the wire impedance from the relay to the neutral grounding resistor and the leakage impedance of the neutral grounding transformer and associated wires. These values are required for accurate measurement of the stator insulation resistance.

In preparation of the field calibration process, ensure that the generator stator winding is free of intentional grounds, that the generator grounding is in normal state, and that wye/broken-delta PTs are racked out or primary fuses are pulled.

NOTE: To ensure successful, trouble-free field calibration, make sure the installation is free of wiring errors and that all generator safety grounds are removed before starting the process.

An auto field calibration process using the SEL-4664 module is required to meet the published measurement accuracies. Alternatively, you can use the *Manual Field Calibration Process* (e. g., when SEL-4664 is not readily available) and perform the auto calibration later. The *Auto Field Calibration Process* uses an SEL-4664 and the **FCA A** command and the *Manual Field Calibration Process* uses the **FCA** command.

Auto Field Calibration Process

The **FCA A** command is an Access Level 2 command and is performed at the device commissioning time using the automatic process. Install the SEL-2664S properly and follow these steps for the field calibration process.

Step 1. Turn on the relay and establish serial communication between your PC and the SEL-2664S.

A baud rate of 19200 (or higher) and terminal emulator VT-100 (or later) are recommended for best results.

Step 2. Enter Access Level 2.

Step 3. Make sure your communications port timeout setting (T_OUT or TIDLE) is set to maximum to ensure the port does not time out before completing the procedure.

Step 4. Locate the SEL-4664 Calibration Module and test leads. Make sure the module has a fresh battery, indicating LEDs toggle (approximately every 10 seconds after a 20-second initialization) when turned on, and ready to connect when prompted during Step 5a next (see *Figure 10.5* through *Figure 10.5* for typical SEL-4664 test connections).

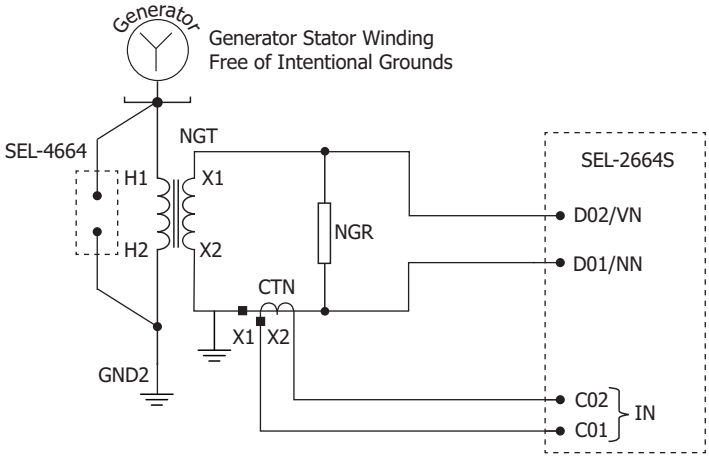

Figure 10.5 SEL-4664 Connections (NGR and CTN on Secondary)

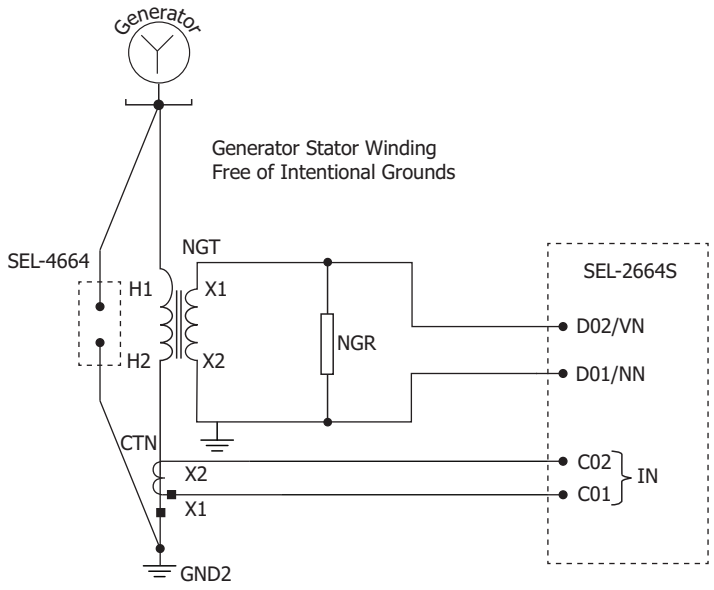

Figure 10.6 SEL-4664 Connections (NGR on Secondary and CTN on Primary)

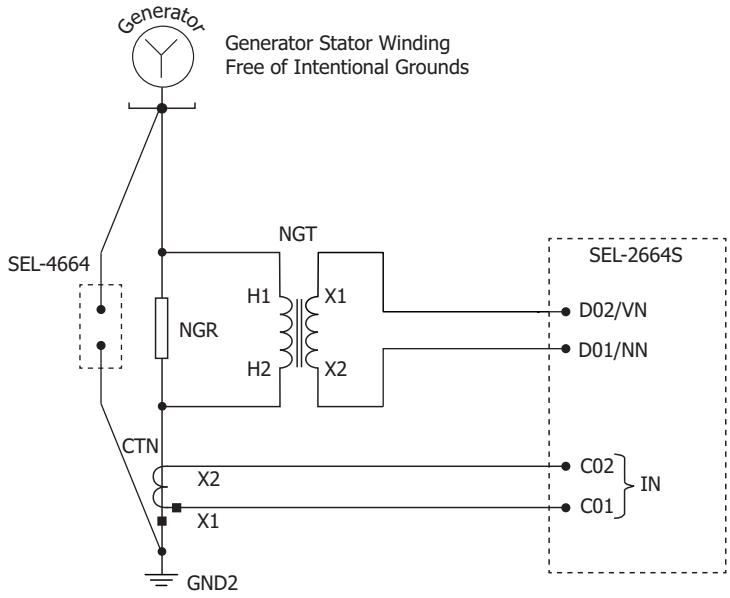

Figure 10.7 SEL-4664 Test Connections (NGR on Primary)

Step 5. Initiate a capture of the terminal activity and issue the **FCA A** command (see *FCA Command* on page 7.21). At the end of the procedure, save the capture as a text file (e.g., Gen_ID_Date.txt) for record keeping or possible troubleshooting.

Error messages generated during the procedure that are not self-explanatory are shown in *Table 10.1*.

The relay response to this command appears.

```
SEL-2664S Field Calibration Procedure: Circuit Verification.

Caution: This procedure requires that the generator be at standstill with safe
access to the generator grounding component space. Please observe all local
regulations and safe working practices outlined in the user's manual.
Please make sure your communication port timeout setting (T_OUT or TIDLE) is
set to maximum (30 min) to ensure port does not time out before completing the
procedure.

Do you wish to proceed? (Y,N)?
```

a. Enter **Y**.

The relay responds with the following:

```
SEL-2664S Field Calibration Procedure: This procedure requires that the SEL-4664
calibration module be connected between the generator neutral and the generator
ground. Please locate the module, make sure it has a fresh battery, turn it on,
verify that indicating LEDs toggle (app. every 10 seconds) and attach the
SEL-4664 to the generator. Relay is now ready to energize the amplifier.

Do you wish to proceed? (Y,N)?
```

b. Enter **Y**.

The relay starts the approximately 10-minute auto calibration process that consists of over 1,500 steps and the following major items:

1. Look for SEL-4664 zero-ohm state (as long as 1.5 min)
2. Measure the SEL-4664 switching period (as long as 1.5 min)
3. Find the current state to start FCA optimization (as long as 6.0 min)
4. Start FCA optimization (approximately 2.5 minutes)

The relay then generates the optimized field calibration constants.

You can watch the FCA progress in real-time on the terminal (see below for an example) until the last step (approximately 1,800) is reached or the process is aborted by manually issuing the CTRL X command.

```
Looking for SEL-4664 Zero ohm State        IN = 0.1536 VN = 0.1527

VN (V)   -0.1509-j0.0238   0.1289-j0.0340  0.0837-j0.0612  -0.0668+j0.0499
ISRC (A) -0.1791-j0.1748   0.2218+j0.1148  0.2422+j0.0614  -0.2371-j0.0767
IN (A)   0.0123-j0.1531    0.0622+j0.1669  0.1443+j0.1470  -0.1615-j0.1479

Measuring SEL-4664 Cycle Time          XXX IN = 0.1600 VN = 0.0836

VN (V)   -0.0732-j0.0404   0.0797+j0.0106  0.0712-j0.0162  -0.0634+j0.0168
ISRC (A) -0.1792-j0.1751   0.2220+j0.1151  0.2426+j0.0614  -0.2375-j0.0766
IN (A)   -0.0916-j0.1312   0.1279+j0.1084  0.1615+j0.0865  -0.1660-j0.1037

Current State  Open    Cycle Time 114      IN = 0.1535 VN = 0.1527

VN (V)   -0.1509-j0.0236   0.1290-j0.0341  0.0838-j0.0614  -0.0668+j0.0497
ISRC (A) -0.1793-j0.1746   0.2219+j0.1147  0.2422+j0.0613  -0.2372-j0.0765
IN (A)   0.0119-j0.1530    0.0623+j0.1667  0.1442+j0.1470  -0.1615-j0.1476

FCA optimization     Step: xxxx      R500 = 501.3 Ohm   R10k = 9.986 kOhm

VN (V)   -0.1460-j0.0248   0.1289-j0.0300  0.0836-j0.0593  -0.0673+j0.0488
ISRC (A) -0.1795-j0.1746   0.2220+j0.1146  0.2423+j0.0612  -0.2372-j0.0766
IN (A)   0.0056-j0.1514    0.0626+j0.1612  0.1446+j0.1443  -0.1609-j0.1465


Field calibration constants:
                18Hz             24Hz             36Hz             48Hz
Z_WIRE  =  0.0441+j0.0026  0.0442+j0.0025  0.0442+j0.0015  0.0441+j0.0010
Z_SHORT =  0.0254-j0.0037  0.0251-j0.0037  0.0250-j0.0030  0.0250-j0.0027
A_CORR  =     -0.0088         -0.0019         0.0227         -0.0074

CALIBRATION COMPLETE
```

Table 10.1 Error Message (Command FCA A)

Message	Remark
`Amplifier Output Overload!`	Make sure that Relay Word bits AMP_LO, OUT_OPEN, and SHUTDOWN are NOT asserted.
`Output power exceeds 50W!`	Verify that the NGR resistance is correct and consider a lower I_SRC setting.
`Neutral Current Angle Error.`	Ensure that the IN and VN inputs are connected with the correct polarity. Wiring or drawing errors can result in this error.
`Measurement error is too high.`	This is an unlikely message and requires detailed analyses. Save and send the terminal capture file to an SEL Application Engineer.

Manual Field Calibration Process

The **FCA** command is an Access Level 2 command and is performed at the device commissioning time using the *Manual Field Calibration Process*. Install the SEL-2664S properly and follow these steps for the field calibration process.

Step 1. Turn on the relay and establish serial communication between your PC and the SEL-2664S.

Step 2. Enter Access Level 2.

Step 3. Make sure your communications port timeout setting (T_OUT or TIDLE) is set to maximum to ensure the port does not time out before completing the procedure.

Step 4. Issue the **FCA** command.

The relay response to this command appears.

```
SEL-2664S Field Calibration Procedure: Circuit Verification

Caution: This procedure requires that the generator be at
   standstill with safe access to the generator grounding
   component space.

Please observe all local regulations and safe working practices
   outlined in the user's manual.

Make sure your communications port timeout setting (T_OUT or
   TIDLE) is set to maximum (30 min) to ensure the port does not
   time out before completing the procedure.

Do you wish to proceed (Y,N)?
```

a. Enter **Y**.

The relay responds with the following text.

```
SEL-2664S Field Calibration Procedure: Ready to energize
   the amplifier.

Are you ready to proceed (Y,N)?
```

b. Enter **Y**.

The relay displays the following message.

```
Measurement in progress:1,2,3,4,5 (...until 20)
```

NOTE: It is possible that the measurement of stator-to-ground insulation resistance will still be accurate even if you get the following message during the FCA procedure: `IN current too low`. When you see this message, check the connections, the CTN ratio, and the relay settings.

The relay takes 20 measurements of the healthy stator impedance for each frequency component and then shows the average of the 20 measurements. The relay displays the following message.

```
Z = xxxxx.xxxx+jyyyyy.yyyy xxxxx.xxxx+jyyyyy.yyyy
   xxxxx.xxxx+jyyyyy.yyyy xxxxx.xxxx+jyyyyy.yyyy
```

Step 5. Start the lead impedance calibration test when the message appropriate for the NGR location appears.

a. If NGR_LOC = SEC, the following message appears:

```
SEL-2664S Field Calibration Procedure: 64S Output Lead
   Calibration Test.
Please short the 64S output lead ends connected to the
   generator grounding resistor terminals.
Are you ready to proceed (Y,N)?
```

Make sure the method used to short does not add any resistance to the lead impedance. The intent of this step is to short the VN–NN terminals at the NGR end to measure the impedance of Z_WIRE. Use one of the two preferred methods shown in *Figure 10.8*.

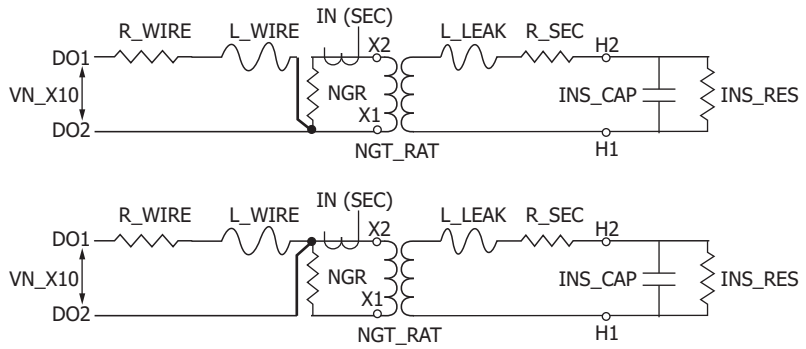

Figure 10.8 Preferred Methods for 64S Output Lead Calibration (NGR Located on Secondary)

b. If NGR_LOC = PRIM, the following message appears:

```
SEL-2664S Field Calibration Procedure: 64S Output Lead
   Calibration Test.
Place a short across the generator grounding resistor terminals.
   Please confirm short is installed.
Are you ready to proceed (Y,N)?
```

Place a short across the NGR terminals, as shown in *Figure 10.9*.

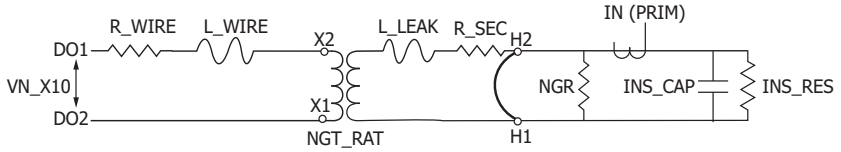

Figure 10.9 64S Output Lead Calibration (NGR Located on Primary)

c. Enter **Y**.

The relay displays the following message.

```
SEL-2664S Field Calibration Procedure: Ready to energize
   the amplifier.
Are you ready to proceed (Y,N)?
```

d. Enter **Y**.

The relay displays the following message.

```
Measurement in progress:1,2,3,4,5 (...until 20)
```

The relay takes 20 measurements of the short circuit impedance and displays the average value of the 20 measurements, as shown in the following message.

```
Z_WIRE = xxxxx.xxxx+jyyyyy.yyyy xxxxx.xxxx+jyyyyy.yyyy
   xxxxx.xxxx+jyyyyy.yyyy xxxxx.xxxx+jyyyyy.yyyy
```

Step 6. Start the primary short circuit test when the following message appears.

```
SEL-2664S Field Calibration Procedure: Primary Short Circuit Test.
Remove the 64S output lead short and install a short circuit
   between the generator neutral and the ground. Please confirm
   short is installed.
Are you ready to proceed (Y,N)?
```

a. Remove the output lead calibration short and install a short circuit between the generator neutral and the ground. Installing the short across the high voltage terminals of the neutral grounding transformer is often the most convenient way to accomplish this step when CTN_LOC = SEC, as illustrated in *Figure 10.10*.

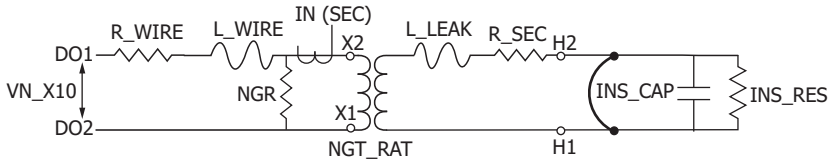

Figure 10.10 Primary Short Circuit Test (NGR Located on Secondary)

However, make sure to short generator neutral and ground when the NGR or CTN is located on primary, as shown in *Figure 10.11*.

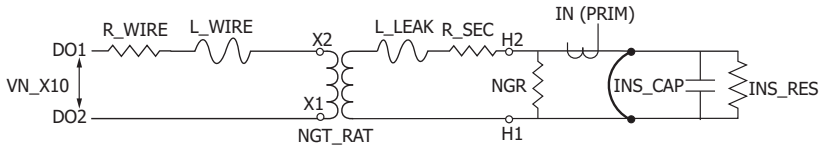

Figure 10.11 Primary Short Circuit Test (NGR Located on Primary)

b. Enter **Y**.

The relay responds with the following message.

```
SEL-2664S Field Calibration Procedure: Ready to energize
   the amplifier.

Are you ready to proceed (Y,N)?
```

c. Enter **Y.**

The relay responds with the following message.

```
Measurement in progress:1,2,3,4,5 (…until 20)
```

The SEL-2664S takes 20 measurements of the impedance with the short circuit in place and displays the average of the 20 measurements.

```
Z_SHORT = xxxxx.xxxx+jyyyyy.yyyy xxxxx.xxxx+jyyyyy.yyyy
   xxxxx.xxxx+jyyyyy.yyyy xxxxx.xxxx+jyyyyy.yyyy
```

Step 7. Start the accuracy verification measurement test when the following message appears.

```
SEL-2664S Field Calibration Procedure: Accuracy Verification
   Measurement.
Remove the primary circuit short and install a 10 kΩ resistor
   (+/- 5% and > 2 W) between the generator neutral and the ground.

Please confirm resistor is installed.

Are you ready to proceed (Y,N)?
```

This step is similar to *Step 6* except you use a 10 kΩ resistor for the short.

a. Replace the short circuit between the generator neutral and the ground with a 10 kΩ resistor as illustrated in *Figure 10.12* or *Figure 10.13*.

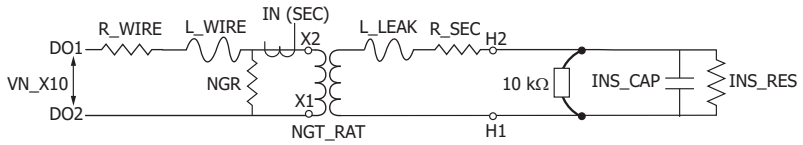

Figure 10.12 Accuracy Measurement Test (NGR Located on Secondary)

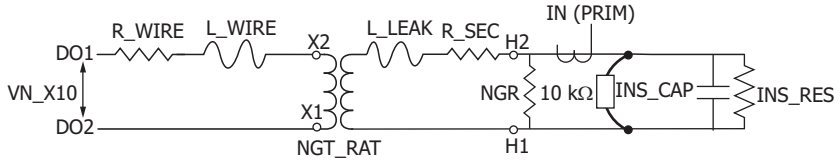

Figure 10.13 Accuracy Measurement Test (NGR Located on Primary)

b. Enter **Y.**

The relay responds with the following message.

```
SEL-2664S Field Calibration Procedure: Ready to energize
   the amplifier.
Are you ready to proceed (Y,N)?
```

c. Enter **Y.**

The relay responds with the following message.

```
Measurement in progress:1,2,3,4,5 (…until 20)
Z_10k = xxxxx.xxx+jyyyyy.yyy xxxxx.xxx+jyyyyy.yyy
   xxxxx.xxx+jyyyyy.yyy xxxxx.xxx+jyyyyy.yyy
                              18Hz     24Hz      36Hz     48Hz
Stator Insulation (kOhm):  9.234   10.838    9.756    10.666
```

The SEL-2664S displays raw Z_10k and then the Stator Insulation (kOhm) after it optimizes the calibration factors based on the raw measurements.

Depending on the system configuration, the relay may not be able to produce measurements that match closely across all four frequencies. For the best results, pay close attention to the quality of all connections (circuit modifications) performed during *Step 4* through *Step 7* of the **FCA** command.

Step 8. Start the final circuit verification step when the following message appears.

```
SEL-2664S Field Calibration Procedure: Final Circuit Verification.

Please remove ALL CIRCUIT MODIFICATIONS.

Are you ready to proceed (Y,N)?
```

Step 9. Remove all circuit modifications.

The unit setup should be the same as when it was properly installed. This step is specifically to verify that all circuit modifications are removed after the field calibration procedure.

a. Enter **Y.**

The relay responds with the following message.

```
SEL-2664S Field Calibration Procedure: Final Circuit
   Verification.
Please remove ALL CIRCUIT MODIFICATIONS.
Are you ready to proceed (Y,N)?
```

b. Enter **Y.**

The relay responds with the following message.

```
SEL-2664S Field Calibration Procedure: Ready to energize
   the amplifier.
Are you ready to proceed (Y,N)?
```

c. Enter **Y**.

The relay responds with the following message.

```
Measurement in progress: 1, 2, 3, 4, 5   (…until 20)
```

The relay takes 20 measurements of the impedance with all the circuit modifications removed and averages the 20 measurements.

If the final circuit verification is successful, the relay responds with the following message.

```
Z_WIRE = xxxxx.xxxx+jyyyyy.yyyy xxxxx.xxxx+jyyyyy.yyyy
xxxxx.xxxx+jyyyyy.yyyy xxxxx.xxxx+jyyyyy.yyyy

Z_SHORT = xxxxx.xxxx+jyyyyy.yyyy xxxxx.xxxx+jyyyyy.yyyy
xxxxx.xxxx+jyyyyy.yyyy xxxxx.xxxx+jyyyyy.yyyy

Z_OPEN = xxxxx.xxxx+jyyyyy.yyyy xxxxx.xxxx+jyyyyy.yyyy
xxxxx.xxxx+jyyyyy.yyyy xxxxx.xxxx+jyyyyy.yyyy

FIELD CALIBRATION COMPLETE
```

NOTE: The original Z and Z_OPEN values are not directly comparable. See *Figure 10.15* for their definitions.

If for some reason the original Z value stored in *Step 4(b)* is more than five percent off the corresponding value calculated in *Step 9(c)*, the relay responds with the following message.

```
SEL-2664S Field Calibration Procedure FAILED!

WARNING: Circuit impedance has changed from Step 1.

ORIGINAL:
 xxxxx.xxxx+jyyyyy.yyyy xxxxx.xxxx+jyyyyy.yyyy
   xxxxx.xxxx+jyyyyy.yyyy xxxxx.xxxx+jyyyyy.yyyy

VERIFIED:
xxxxx.xxxx+jyyyyy.yyyy xxxxx.xxxx+jyyyyy.yyyy
   xxxxx.xxxx+jyyyyy.yyyy xxxxx.xxxx+jyyyyy.yyyy
```

If the relay field calibration failed, check the circuit connection and make sure all the circuit modifications are removed.

FCA and FCA A for Dual Redundant Configuration

When using the SEL-2664S in a dual redundant configuration as shown in *Figure 2.17* (MODE_SRC setting equal to P1, P2, or P_LOGIC), field calibration must be performed twice, one relay at a time. The injection source of the relay not under calibration must be turned off. Use one of the following methods to turn off the source.

- Turn the control switch 43AMP (see *Figure 2.18*) to OFF, if available.
- Disconnect the relay power supply.
- Temporarily set E64S := 0.

Restore the relay (connections, configuration, and settings) to in-service conditions at the end of the calibration procedure.

IMPORTANT: Do not use the **FCA W** command unless instructed to do so by a technical representative from SEL.

You can see the field calibration values by using command **FCA S**. See *Figure 10.14* and *Figure 10.15* for examples of a typical relay response to this command. Use command **FCA C** to reset the calibration values. On the rare occasion that the field-calibration procedure cannot be performed properly, use command **FCA W** to manually preload the calibration values.

```
=>>FCA S <Enter>

SEL-2664S                                Date: 02/14/2022   Time: 13:35:04.698
STATOR GND RELAY                         Time Source: External

Field calibration constants:
              18Hz              24Hz              36Hz              48Hz
Z_WIRE =  0.3107-j0.0052    0.3107-j0.0069    0.3107-j0.0104    0.3107-j0.0138
Z_SHORT = 0.0737+j0.0080    0.0735+j0.0110    0.0734+j0.0167    0.0737+j0.0225
Z_OPEN =  0.2589-j2.7108    0.1238-j1.9177    0.0663-j1.1961    0.0517-j0.8684
A_CORR =  0.0000            0.0000            0.0000            0.0000

Neutral CT Input: Not Inverted

Z_WIRE resistance correction = 0.0075

Raw measurements:
              18Hz              24Hz              36Hz              48Hz
VN (V)    0.0543-j0.3732    -0.0634+j0.3716   -0.2047+j0.3168   0.3606-j0.1108
ISRC (A)  0.1386-j0.9906    -0.1604+j0.9866   -0.5332+j0.8464   0.9501-j0.3087
IN (A)    0.1274-j0.9371    -0.1440+j0.9343   -0.4915+j0.8080   0.8915-j0.3119

Impedance seen from the relay terminals (ZSRC)

               18Hz              24Hz              36Hz              48Hz
Mag (ohm sec)  0.3770            0.3771            0.3771            0.3776
Angle (deg)    0.3164            0.4487            0.6612            0.9137

Impedance seen from the NGR terminals (ZLKG)

              18Hz              24Hz              36Hz              48Hz
Mag (ohm sec) 0.0705            0.0709            0.0719            0.0738
Angle (deg)   6.4851            8.9298            13.4168           17.8277
```

Figure 10.14 FCA S Command Response

Field calibration constants:	18Hz	24Hz	36Hz	48Hz	
Z_WIRE =	0.0636-j0.0009	0.0636-j0.0012	0.0636-j0.0019	0.0636-j0.0025	Z_WIRE is the impedance of the wire between the amplifier and the neutral grounding resistor (NGR). Z_WIRE includes leakage impedance of the NGT if the NGR is on the primary side.
Z_SHORT =	0.0274-j0.0000	0.0274+j0.0001	0.0273+j0.0002	0.0272+j0.0002	Z_SHORT is the impedance between the NGR and the generator neutral (e.g., leakage impedance of the NGT if the NGR is on the secondary side).
Z_OPEN =	0.0000+j0.0000	0.0000+j0.0000	0.0000+j0.0000	0.0000+j0.0000	Z_OPEN is not used and is set to zeros when the field calibration is performed using the FCA A command. It is the calculated impedance at the NGR terminals with the system in a normal condition when manually calibrated, used only during the procedure.
A_CORR =	0.0000	0.0000	0.0000	0.0000	Angle correction of current (IN) from FCA A procedure.
Neutral CT Input: Not Inverted					The Neutal CT Input section shows the status of the CT input (inverted or not inverted). Input inversion is provided as a convenience feature made available during the FCA procedure. Please consider correcting the neutral CT wiring instead of using this feature, particularly when the CT is located on the primary side of the NGT.
Z_WIRE resistance correction = 0.0075					Real-time compensation for the change in the Z_WIRE resistance (active when the relay is injecting all four frequencies).
Raw measurements:	18Hz	24Hz	36Hz	48Hz	The raw measurements section shows the measurements on which the insulation resistance, insulation capacitance, and neutral grounding resistance are calculated at the time of the **FCA S** command.
VN (V)	**0.3789+j0.1720**	**-0.2006-j0.3636**	**0.3756-j0.1759**	**-0.0316-j0.4123**	VN is the measured voltage from the VN terminal.

Figure 10.15 FCA S Command Response Explanation

ISRC (A) 1.1247+j0.5486 -0.5636-j1.1164 1.1599-j0.4683 -0.0066-j1.2468	ISRC is the measured current from the VN terminal.
IN (A) 0.1144+j0.0802 -0.0364-j0.1373 0.1472-j0.0125 0.0569-j0.1441	IN is the measured current from the neutral CBCT. (Note that IN is converted to the low voltage side of the neutral grounding transformer even if it is measured on the high voltage side.
Impedance seen from the relay terminals (ZSRC): 18Hz 24Hz 36Hz 48Hz	ZSRC is calculated ZSRC = VN/ISRC. It represents the impedance the relay measures from the VN terminal.
MAG (ohm sec)0.3326 0.3321 0.3316 0.3312 **ANGLE** (deg) -1.5848 -2.0999 -3.1148 -4.0853	
Impedance seen from the NGR terminals (ZLKG): 18Hz 24Hz 36Hz 48Hz	ZLKG is calculated ZLKG = (VN – Z_WIRE • ISRC)/IN. ZLKG is the calculated impedance at NGR terminals with the system in present condition.
MAG (ohm sec)2.4081 2.3637 2.2680 2.1565 **ANGLE** (deg) -10.7905 -14.2834 -20.5856 -26.3961	

Figure 10.15 FCA S Command Response Explanation (Continued)

FCA Checklist

After a successful completion of the field calibration procedure (automatic or manual), it is recommended to save MET and FCA S reports (with the relay still offline) and go through the following checklist to identity some of the possible issues with the calibration data or procedure.

Step 1. Check the MET Report

a. “Stator Insulation (kOhm)” should be high (e.g., >50 kOhm) for units with reasonably good stator system insulation. Note that this value may be affected by wye-broken-delta transformer connected to the generator terminals.

b. “Neutral Ground Resistor (Ohm)” should be very close to the nominal NGR value (e.g., within ±10 percent).

c. INJECTED “RMS Current (A sec)” should be very close to the I_SRC setting (within ±5 percent).

d. NEUTRAL “RMS Current (A sec)” should be smaller than the INJECTED current (about 20 percent to 85 percent influenced by several factors).

e. Calculate INRMS and VNRMS from F1–F4 measurements (FCA S report), should be equal to reported INRMS and VNRMS (MET report), respectively.

f. VN1 and VN3 should be almost zero.

Step 2. Staged faults check using the SEL-4664.

a. Connect SEL-4664 between the generator neutral and the ground (see *Figure 10.5* through *Figure 10.7*).

b. Turn on the SEL-4664.

c. Initiate the terminal capture session and execute the **MET 500** command.

d. Terminate the session when the **MET 500** command is complete.

e. Verify that the SEL-4664 states (0, 0.5, 10, and 99.99 kΩ) are appropriately measured.

f. Verify the NGR measured during the Open state (99.99 kΩ) matches the NGR_VAL setting.

g. Verify the capacitance measured during the Open state (99.99 kΩ) is in between 0.5 and 6 uF.

h. Disconnect and remove the SEL-4664.

Step 3. Additional Recommendation: The SEL-2664S saves a profile report that includes third-harmonic and insulation measurement data. It is important to periodically review the profile report (see *CPRO Command (Compressed Profile Report)* on page 7.20 and *LDP Command (Profile Report)* on page 7.26) to verify an adequate margin or to fine-tune the settings.

All atypical reports should be resolved or well understood, and may require repeat of the FCA procedure.

The profile report described in *Profile Report Settings* on page 4.36 records useful data at regular intervals in a circular buffer. Use the **LDP** (or **CPRO**) command to retrieve and review the profile report (e.g., once a month) after the generator is put in service.

Periodic Tests (Routine Maintenance)

Because the SEL-2664S is equipped with extensive self-tests, the most effective maintenance task is to monitor the front-panel LED after a self-test failure. In addition, each relay event report generated by a fault should be reviewed. Such reviews frequently reveal problems with equipment external to the relay, such as instrument transformers and control wiring.

The SEL-2664S does not require specific routine tests, but your operation standards may require some degree of periodic relay verification. If you need or want to perform periodic relay verification, the following checks are recommended.

Table 10.2 Periodic Relay Checks

Test	Description
Relay Status	Use the serial port **STATUS** command to verify that the relay self-tests have not detected any WARN or FAIL conditions.
Meter	Verify that the relay is correctly measuring current and voltage (if included) by comparing the relay meter readings to separate external meters.
Control Input	Using the **TAR 6** command, check the control input status in the relay. As you apply rated voltage to each input, the position in Row 6 corresponding to that input should change from zero (0) to one (1).
Contact Output	For each output contact, set the input to Logic 1. This causes the output contact to close. For example, setting OUT01 := 1 causes the output **OUT01** contact to close. Repeat the process for all contact outputs. Make sure that each contact closure does what you want it to do in the annunciation, control, or trip circuit associated with that contact closure.

Self-Test

The SEL-2664S runs a variety of self-tests. The relay takes the following corrective actions for out-of-tolerance conditions (see *Table 10.3*):

- Protection Disabled: The relay disables protection and control elements and trip/close logic. All output contacts are de-energized. The **ENABLED** front-panel LED is extinguished.
- ALARM Output: Two Relay Word bits, HALARM and SALARM, signal self-test problems. SALARM is pulsed for software programmed conditions, such as settings changes, access level changes, three consecutive unsuccessful password entry attempts, and password changes. HALARM is pulsed for hardware self-test warnings. HALARM is continuously asserted (set to logical 1) for hardware self-test failures. A diagnostic alarm can be configured as explained in *Section 4: Protection and Logic Functions*. In the Alarm Status column of *Table 10.3*, Latched indicates that HALARM is continuously asserted, Not Latched indicates that HALARM is pulsed for five seconds, and NA indicates that HALARM is not asserted.
- The relay generates automatic STATUS reports at the serial port for warnings and failures (ports with setting AUTO = Y).
- For certain failures, the relay will automatically restart as many as three times. In many instances, this will correct the failure. Indication that the relay restarted will be recorded in the Sequential Events Recorder (SER).

NOTE: Refer to *ACCESS Commands (ACCESS, 2ACCESS, and CAL)* on page 7.17 for more information on when SALARM is pulsed for access level changes and unsuccessful password entry.

Use the STATUS command to view relay self-test status. Based on the self-test type, issue the STA C command as directed in the Corrective Actions column. Contact SEL if this does not correct the problem.

Table 10.3 Relay Self-Tests (Sheet 1 of 3)

Self Test	Description	Normal Range	Protection Disabled on Failure	Alarm Status	Auto Message on Failure	Corrective Action
Watchdog Timer Periodic resetting (1/32 cycle)			Yes	De-energized	No	
Main board FPGA (turn on)	Fail if main board Field Programmable Gate Array does not accept program or the version number is incorrect		Yes	Latched	Yes	Automatic restart Contact SEL if failure returns.
Main board FPGA (run time)	Fail on lack of data acquisition interrupts or on detection of a CRC error in the FPGA code		Yes	Latched	Yes	Automatic restart Contact SEL if failure returns.
GPSB (back-plane) communication	Fail if GPSB is busy on entry to processing interval		Yes	Latched	Yes	STA C
External RAM (turn on)	Performs a read/write test on system RAM		Yes	Latched	No	
External RAM (run time)	Performs a read/write test on system RAM		Yes	Latched	Yes	Automatic restart Contact SEL if failure returns.

Table 10.3 Relay Self-Tests (Sheet 2 of 3)

Self Test	Description	Normal Range	Protection Disabled on Failure	Alarm Status	Auto Message on Failure	Corrective Action
Internal RAM (turn on)	Performs a read/write test on system CPU RAM		Yes	Latched	No	
Internal RAM (run time)	Performs a read/write test on system CPU RAM		Yes	Latched	Yes	Automatic restart Contact SEL if failure returns.
Code Flash (turn on)	SELBOOT qualifies code with a checksum		NA	NA	NA	
Data Flash (turn on)	Checksum is computed on critical data		Yes	Latched	Yes	
Data Flash (run time)	Checksum is computed on critical data		Yes	Latched	Yes	
Critical RAM (settings)	Performs a checksum test on the active copy of settings		Yes	Latched	Yes	Automatic restart Contact SEL if failure returns.
Critical RAM (run time)	Verify instruction matches Flash image		Yes	Latched	Yes	Automatic restart Contact SEL if failure returns.
Code RAM (run time)			Yes	Latched	Yes	Automatic restart Contact SEL if failure returns.
+0.9 V Fail	Monitor +0.9 V power supply	1.08 to 1.32 V	Yes	Latched	Yes	
+1.2 V Fail	Monitor +1.2 V power supply	1.62 to 1.98 V	Yes	Latched	Yes	
+1.5 V Fail	Monitor +1.5 V power supply	1.35 to 1.65 V	Yes	Latched	Yes	
+1.8 V Fail	Monitor +1.8 V power supply	2.25 to 2.75 V	Yes	Latched	Yes	
+3.3 V Fail	Monitor +3.3 V power supply	2.97 to 3.63 V	Yes	Latched	Yes	
+5 V Fail	Monitor +5 V power supply	2.30 to 10.00 V	Yes	Latched	Yes	
+2.5 V Fail	Monitor +2.5 V power supply	2.97 to 3.63 V	Yes	Latched	Yes	
–5 V Fail	Monitor –5 V power supply	–10.00 to –2.00 V	Yes	Latched	Yes	
Clock Battery	Monitor Clock Battery	2.30 to 10.00 V	No	Not Latched	Yes	
Clock Chip	Unable to communicate with clock		No	Not Latched	Yes	STA C Contact SEL if failure returns or fails time keeping test.
Clock Chip RAM	Clock chip static RAM fails		No	Not Latched	Yes	STA C Contact SEL if failure returns.

Table 10.3 Relay Self-Tests (Sheet 3 of 3)

Self Test	Description	Normal Range	Protection Disabled on Failure	Alarm Status	Auto Message on Failure	Corrective Action
CID (Configured IED Description) file (access)	Failure to Access/Read CID File		No	NA	Yes	
Exception Vector	CPU Error		Yes	Latched	NA	Automatic restart Contact SEL if failure returns.
Amplifier Self Tests						
Amplifier	Indicates amplifier status	AMP_LO := 1, status is FAIL; E64S := 0, status is N/A; else it is OK.		Not Latched	Yes	
Offsets						
IINJ WARN	Offset current flowing through VN-NN terminals	±100 mV	N/A	Not Latched	Yes	STA C Contact SEL if failure returns.
IN WARN	Neutral CBCT secondary current offset	±100 mV	N/A	Not Latched	Yes	STA C Contact SEL if failure returns.
VINJX1 WARN	Offset voltage at the VN-NN terminals (Channel Gain = 1)	±100 mV	N/A	Not Latched	Yes	STA C Contact SEL if failure returns.
VINJX10 WARN	Offset voltage at the VN-NN terminals (Channel Gain = 10)	±100 mV	N/A	Not Latched	Yes	STA C Contact SEL if failure returns.
Voltages						
VISO_P24 WARN	Amplifier positive supply rail diagnostics	< 20 V or > 35 V	N/A	Not Latched	Yes	
VISO_N24 WARN	Amplifier negative supply rail diagnostics	< –35 V or > –20 V	N/A	Not Latched	Yes	
ADCCHK	A/D reference channel check	< 2.375 V or > 2.625 V	Yes	Latched	Yes	Automatic restart Contact SEL if failure returns.
Temperature						
VTEMP WARN	Relay amplifier stage temperature	< –40°C or > 85°C	N/A	Not Latched	Yes	STA C Contact SEL if failure returns.
Optional External Field Ground Module (SEL-2664)						
Communications Status OK/FAIL		NA	NA	No	Yes	
Module Status OK/FAIL/NA		NA	NA	No	Yes	

Troubleshooting

Table 10.4 Troubleshooting

Symptom/Possible Cause	Diagnosis/Solution
The relay ENABLED front-panel LED is dark.	
Input power is not present or a fuse is blown.	Verify that input power is present. Check fuse continuity.
Self-test failure	View the self-test failure message at the communications port.
The relay does not accurately measure voltages or currents.	
Wiring error	Verify input wiring.
Incorrect NGT_RAT, CTN_LOC, or CTN_RAT setting	Verify instrument transformer ratios, connections, and associated settings.
Voltage neutral terminal (NN) is not properly grounded.	Verify wiring and connections.
Field calibration procedure was not properly done.	Redo the field calibration procedure properly.
The relay does not respond to commands from a device connected to the serial port.	
Cable is not connected.	Verify the cable connections.
Cable is not the correct type.	Verify the cable pinout.
The relay or device is at an incorrect baud rate or has another parameter mismatch.	Verify Device software setup.
The relay serial port has received an XOFF, halting communication.	Type **<Ctrl+Q>** to send the relay XON and restart communication.
The relay does not respond to faults.	
The relay is improperly set.	Verify the relay settings.
Improper test source settings	Verify the test source settings.
Current or voltage input wiring error	Verify input wiring.
Field calibration procedure was not properly done.	Redo the field calibration procedure properly.
Failed relay self-test	Use the front-panel `RELAY STATUS` function to view self-test results.

Technical Support

We appreciate your interest in SEL products and services. If you have questions or comments, contact us at:

Schweitzer Engineering Laboratories, Inc.
2350 NE Hopkins Court
Pullman, WA 99163-5603 U.S.A.
Tel: +1.509.338.3838
Fax: +1.509.332.7990
Internet: selinc.com/support
Email: info@selinc.com

APPENDIX A

Firmware and Manual Versions

Firmware

Determining the Firmware Version

To find the firmware version number in your SEL-2664S, use the **STA** command (see *STATUS Command (Relay Self-Test Status)* on page 7.33 for more information on the **STA** command). The firmware revision number is after the R, and the release date is after the D. For example, the following is firmware revision number 100, release date May 7, 2014.

FID=SEL-2664S-R100-V0-Z001001-D20140507

Table A.1 and *Table A.2* list the firmware versions, a description of modifications, and the instruction manual date code that corresponds to firmware versions. The most recent firmware version is listed first.

Starting with revisions published after March 1, 2022, changes that address security vulnerabilities are marked with "[Cybersecurity]". Improvements to cybersecurity functionality that should be evaluated for potential cybersecurity importance are marked with "[Cybersecurity Enhancement]".

Table A.1 R200 Series Firmware Revision History

Firmware Identification (FID) Number	Summary of Revisions	Manual Date Code
SEL-2664S-R200-V0-Z003002-D20221111	➤ Revised the firmware to allow replacement of the field-programmable gate array (FPGA) part. ➤ Added support for automatic field calibration by introducing the SEL-4664 Field Calibration Module. ➤ Revised the hardware to allow for increased compliance voltage of 74 V on the amplifier (Version 2.0). ➤ Improved the factory calibration procedure. ➤ Enhanced the firmware by adding a run-time resistance (Re[Z_WIRE]) correction that provides compensation for small changes in the injection lead resistance. ➤ Expanded the field calibration (**FCA S** command) report to include date and time stamp, neutral current angle correction, and resistance compensation for changes in Z_WIRE. ➤ Enhanced the firmware to allow for the dynamic selection of injection mode. ➤ Added a high-security mode (VFD_STRT) for use during variable frequency starts of the prime mover. ➤ Expanded the measurement range of the IN input. ➤ Decreased the lower limits of the neutral overvoltage element pick up settings 59N1P and 59NRMSP.	20221111

Table A.1 R200 Series Firmware Revision History

Firmware Identification (FID) Number	Summary of Revisions	Manual Date Code
	➤ Added the IN_CLIP Relay Word bit to detect clipping of the neutral current channel. ➤ Added a compressed PRO (profile) command report that is compatible with the SEL-5601-2 SYNCHROWAVE Event Software. ➤ Resolved a rare issue where the dependability of the NGR monitoring element could be compromised. ➤ Resolved an issue where the IN_RMS quantity was reported as invalid when read from the real-time automation controller (RTAC).	

Table A.2 R100 Series Firmware Revision History

Firmware Identification (FID) Number	Summary of Revisions	Manual Date Code
SEL-2664S-R101-V0-Z002001-D20190416	➤ Revised the field calibration procedure and the insulation resistance measurement algorithms to improve the accuracy of the insulation resistance measurements. ➤ Enhanced the amplifier control logic to prevent third-harmonic neutral voltage (VN3) greater than 26 V peak from locking out the amplifier, which requires a user action to restart. ➤ Added NGR_TAP setting to support generator applications with higher amounts of third-harmonic voltage. ➤ Increased the upper limit of the neutral CT ratio setting from 2000 to 5000. ➤ Added the VN1_V_sec, VN3_V_sec, VN_RMS_sec, INS_RES_kOhm, INS_CAP_uF, and IN3_A_sec quantities to the event report. Also updated profile report default settings to include the IN3_MAG, IN_RMS, and MES_NGR analog quantities. ➤ Modified the prompt for the DNP Master IP address settings DNPIP*n* to distinguish it from the device IP address. ➤ Added third-harmonic neutral current data register, IN3_MAG, to the metering category of the Modbus map. ➤ Revised the firmware to remove option D from the NETPORT setting. ➤ Added the enable port setting EPORT to all the communications ports to enhance port security.	20190416
SEL-2664S-R100-V0-Z001001-D20140507	➤ Initial version.	20140507

Instruction Manual

The date code at the bottom of each page of this manual reflects the creation or revision date. *Table A.3* lists the instruction manual release dates and a description of modifications. The most recent instruction manual revisions are listed at the top.

Table A.3 Instruction Manual Revision History (Sheet 1 of 4)

Revision Date	Summary of Revisions
20250124	**Preface** ➤ Updated *Other Safety Marks* to include new warnings. **Section 1** ➤ Updated *Overview*. ➤ Updated *Applications* and *Metering* to remove references to parallel machine configurations. ➤ Updated *Specifications*. **Section 2** ➤ Updated *Physical Location* and *Relay Mounting*. ➤ Updated *Typical Application Connection Diagrams* for changes related to redundant relay applications and parallel machine configurations. ➤ Updated *Application Considerations* to include information about using the SEL-2664S in conjunction with other devices. **Section 4** ➤ Reordered *Equation 4.1* through *Equation 4.8* for changes related to NGT_RAT. ➤ Updated *Equation 4.1* and *Equation 4.2*. ➤ Updated *Recommendations for Optimum Performance* to remove references to parallel machine configurations. ➤ Updated *Setting Suggestions and Comments* for changes related to redundant relay applications. ➤ Updated *Configuration Settings*. ➤ Updated *Equation 4.14*. **Section 10** ➤ Updated *Serial Port Commands* and *Field Calibration Process*. ➤ Updated *Table 10.3: Relay Self-Tests* to include a corrective action under the “Temperature” heading. **Appendix B** ➤ Updated *Required Equipment* for changes related to the discontinuation of the Firmware CD. **Appendix D** ➤ Updated *Device Profile* for changes related to the discontinuation of the Product Literature CD.
20221111	**Preface** ➤ Updated *Product Labels*. **Section 1** ➤ Updated *Overview*, *Relay Functional Overview*, including *Figure 1.1: Relay Concept Diagram*. ➤ Updated *Hardware Features* and *Accessories*. ➤ Updated *Figure 1.3: STA Command Response*. ➤ Updated *Applications* and *Specifications*.

Table A.3 Instruction Manual Revision History (Sheet 2 of 4)

Revision Date	Summary of Revisions
	Section 2 ➤ Updated *Physical Location*. ➤ Updated *Typical Application Connection Diagrams*, including *Figure 2.13: AC Connections With Neutral CBCT on the Secondary Side of the Neutral Grounding Transformer* through *Figure 2.19: Parallel Generators Configuration–AC Connections Using One SEL-2664S*. ➤ Updated *Application Considerations*, including *Figure 2.21: Basic AC Connections Using the NGR Tap*, *Table 2.3: Guidelines for Selecting the CTN Ratio (Hardware Version V1)*, and *Table 2.4: Methods to Create the Desired Effective CTN Ratio*. **Section 4** ➤ Updated *Configuration Settings*, *Protection Elements*, and *Trip/Close Logic Settings*. ➤ Updated *SER Trigger Lists*, *Relay Word Bit Aliases*, and *Profile Report Settings*. **Section 5** ➤ Updated *Table 5.1: Metered Quantities*. ➤ Updated *Profile Report Monitoring*. **Section 7** ➤ Added the *CPRO Command (Compressed Profile Report)* and updated *IDENTIFICATION Command*. **Section 9** ➤ Updated *Figure 9.1: Data Capture/Event Report Times*. ➤ *Table 9.4: CEV Command* and *Table 9.6: Event Report Quantities*. **Section 10** ➤ Updated *Required Equipment*, *Field Calibration Process*. ➤ Added *Auto Field Calibration Process* and *Manual Field Calibration Process*. ➤ Updated *FCA Checklist*. **Appendix A** ➤ Updated for R200-V0 firmware. **Appendix C** ➤ Updated *Table C.2: Compressed ASCII Commands*. **Appendix F** ➤ Updated *Table F.8: Logical Device: MET (Metering)*. **Appendix H** ➤ Updated *Table H.1: SEL-2664AS Relay Word Bits* and *Table H.2: Relay Word Bit Definitions for the SEL-2664S*. **Command Summary** ➤ Added **FCA A**.
20201125	**Section 2** ➤ Updated *Table 2.3: Guidelines for Selecting the CTN Ratio*. **Section 4** ➤ Updated *Configuration Settings*.
20190416	**Preface** ➤ Updated product compliance label under *Product Labels.* **Section 1** ➤ Updated *Accessories* to include CBCTs. ➤ Updated *Specifications*.

Table A.3 Instruction Manual Revision History (Sheet 3 of 4)

Revision Date	Summary of Revisions
	Section 2 ➤ Updated *Typical Application Connection Diagrams*. ➤ Updated *Application Considerations*. ➤ Added *Figure 2.21: Basic AC Connections Using the NGR Tap.* **Section 3** ➤ Removed *Figure 3.7: Update Part Number* and the associated text. **Section 4** ➤ Updated *Configuration Settings* and *Neutral Overvoltage Element (59N1 and 59NRMS)* under *Group Settings (SET Command)*. ➤ Updated *Table 4.2: Configuration Settings.* ➤ Updated note under *Neutral Grounding Resistor (NGR) Motor Function*. ➤ Updated equations for SHORT_P and OPEN_P and added note to *Neutral Ground Resister (NGR) Monitor Function*. ➤ Updated *Amplifier Control*. ➤ Added note to *TR Trip Conditions SELOGIC Control Equation.* ➤ Updated *Port Settings (SET P Command)* to include EPORT setting. ➤ Updated SER1 in *Table 4.23: SER Trigger Settings*. ➤ Updated PROFLIST in *Table 4.27: Profile Report Settings*. **Section 5** ➤ Updated *Table 5.1: Metered Quantities*. ➤ Updated *Figure 5.1: MET Command Response*. ➤ Updated *Figure 5.3: LDP Command Response*. **Section 6** ➤ Updated *Setting Entry Error Message*. **Settings Sheets** ➤ Added NGR Signal Injection Tap and updated Neutral CT Ratio under *Configuration*. ➤ Updated *SET PORT p (p = F, 1, 2, or 3)* Command to include EPORT setting at to remove option D from PRIMARY NETPORT under PORT 1. ➤ Updated SER1 under *SER Trigger Lists*. ➤ Updated PROFILE LIST under *Profile Report*. **Section 7** ➤ Updated *NETPORT Selection* to remove option D. ➤ Updated *Figure 7.17: SHOW Command Example* to include NGR_TAP. ➤ Updated *Access Levels* to include EPORT setting. **Section 8** ➤ Added footnote to *Table 8.2: Operation LEDs.* ➤ Updated *Target Reset*. **Section 9** ➤ Updated number of stored event summaries under *Event Summaries*. ➤ Updated *Figure 9.3: Compressed Event Report Summary and Trigger Row*. ➤ Updated *Table 9.6: Event Report Quantities.* **Section 10** ➤ Updated *Field Calibration Process*. ➤ Updated *Figure 10.9: FCA S Command Response Explanation.* ➤ Updated *FCA Checklist*. ➤ Added note to *Self-Test*.

Table A.3 Instruction Manual Revision History (Sheet 4 of 4)

Revision Date	Summary of Revisions
	Appendix A ➤ Updated *Table A.1: R100 Series Firmware Revision History* for R101-V0 firmware. **Appendix E** ➤ Updated *Table E.33: Modbus Register Labels for Use with SET M Command.* ➤ Updated *Table E.34: Modbus Register Map.* **Appendix H** ➤ Updated Bit 3 in *Table H.1: SEL-2664S Relay Word Bits.* ➤ Added VN3HIGH to *Table H.2: Relay Word Bit Definitions for the SEL-2664S.* ➤ Updated bit description for SALARM in *Table H.2: Relay Word Bit Definitions for the SEL-2664S*. **Appendix I** ➤ Updated *Table I.1: Analog Quantities*. **Command Summary** ➤ Updated LDP entry to LDP *n*.
20180515	**Preface** ➤ Updated *Safety Information.* ➤ Updated *General Information*. ➤ Updated *Product Labels.* **Section 1** ➤ Updated *Overview*. ➤ Updated *Accessories* under *Features*. ➤ Updated *Applications*. ➤ Updated *Specifications.* **Section 2** ➤ Added note to *Overview*. ➤ Updated *Relay Placement.* ➤ Updated *Figure 2.3: SEL-2664S Connection Diagram for Wall-Mount Option.* ➤ Updated *Figure 2.6: SEL-2664S Connection Diagram for Rack and Panel-Mount Option.* ➤ Updated *Typical Application Connection Diagrams.* ➤ Added *Figure 2.18: Parallel Generators Configuration—AC Connections Using One SEL-2664S.* ➤ Added *Figure 2.19: Parallel Generators Configuration—AC Connections Using Two SEL-2664S Relays*. ➤ Updated *Application Considerations.* **Section 4** ➤ Updated *Group Settings (SET Command).* ➤ Updated *Report Settings (SET R Command).* **Section 5** ➤ Updated *Table 5.1: Metered Quantities*. **Section 7** ➤ Added note to *Figure 7.18: Typical Relay Output for STATUS S Command.* **Section 10** ➤ Updated *Commissioning Tests.* ➤ Updated *Figure 10.1: Grounding Circuit Topology With Grounding Resistor on the Secondary Side.* ➤ Added *Figure 10.2: Preferred Method for 64S Output Lead Calibration.* ➤ Added *Figure 10.3: Illustration of Primary Short Circuit Test During the FCA Procedure.* ➤ Updated *Figure 10.5: FCA S Command Response Explanation.*
20140507	➤ Initial version.

APPENDIX B

Firmware Upgrade Instructions

Overview

SEL occasionally offers firmware upgrades to improve the performance of your relay. Because the SEL-2664S relays store firmware in flash memory, changing physical components is unnecessary. Upgrade the relay firmware by downloading a file from your computer to the relay via the front-panel serial port using ACSELERATOR QuickSet SEL-5030 Software or a terminal emulator as outlined in the following sections. For relays with the IEC 61850 option, verify the IEC 61850 protocol after the upgrade (see *Protocol Verification for Relays With IEC 61850 Option*).

Required Equipment

Gather the following equipment before starting this firmware upgrade:

- PC
- Terminal emulation software that supports Xmodem/CRC or 1k Xmodem/CRC protocol
- Serial communications cable (SEL-C234A or equivalent, or a null-modem cable)
- Firmware upgrade file (for example, r101*xxxxx*.s19 or r101*xxxxx*.z19)
- QuickSet Software

NOTE: Firmware releases are also available as zip files (.z19). Use the zip file for faster download.

Upgrade Firmware Using QuickSet

Refer to *QuickSet Setup* on page 3.2 of *Section 3: PC Software* for setup and connection procedures.

Select **Tools** > **Firmware Loader** from the QuickSet menu bar to launch a wizard that walks you through the steps to load firmware into your SEL device.

The Firmware Loader is not supported on Ethernet port connections.

The Firmware Loader does not start if:

- ➤ The device is unsupported by QuickSet.
- ➤ The device is not connected to the computer with a communications cable.
- ➤ The device is disabled.

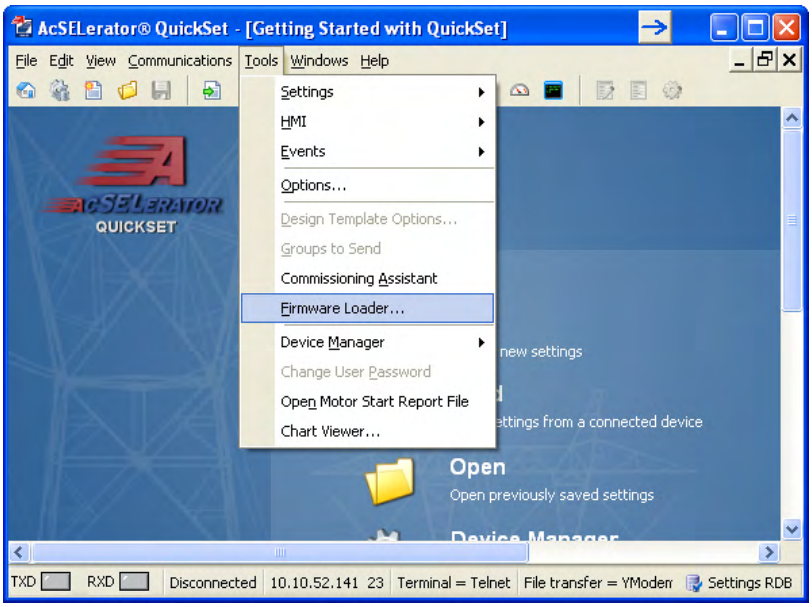

Step 1. Prepare the device.

a. Select the firmware to be loaded using the browse control and check **Save calibration settings**, **Save device settings**, and **Save events**. Select **Next** to continue the wizard.

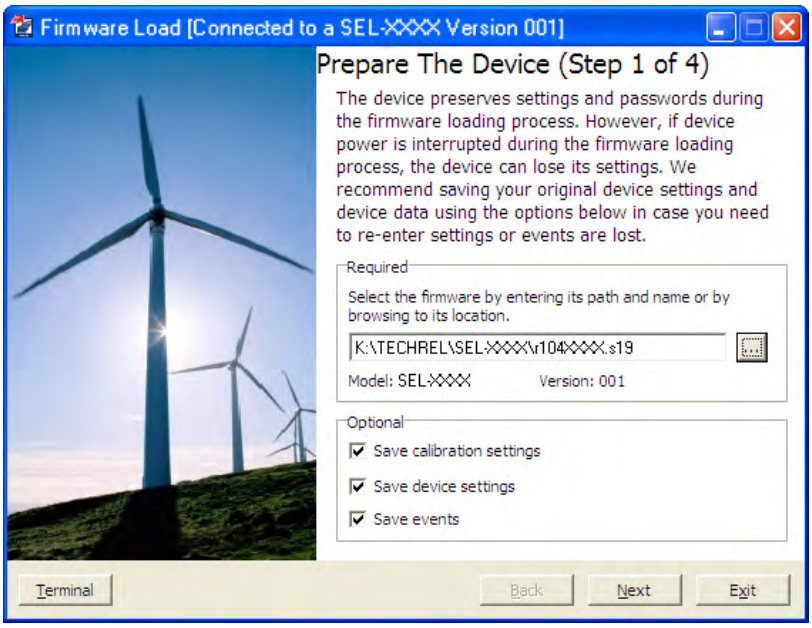

NOTE: Change the data rate of the relay serial port to 9600 before issuing the **L_D** command to start the upgrade process.

b. Select a file name to save the selected settings or accept the defaults as shown. Select **Save**.

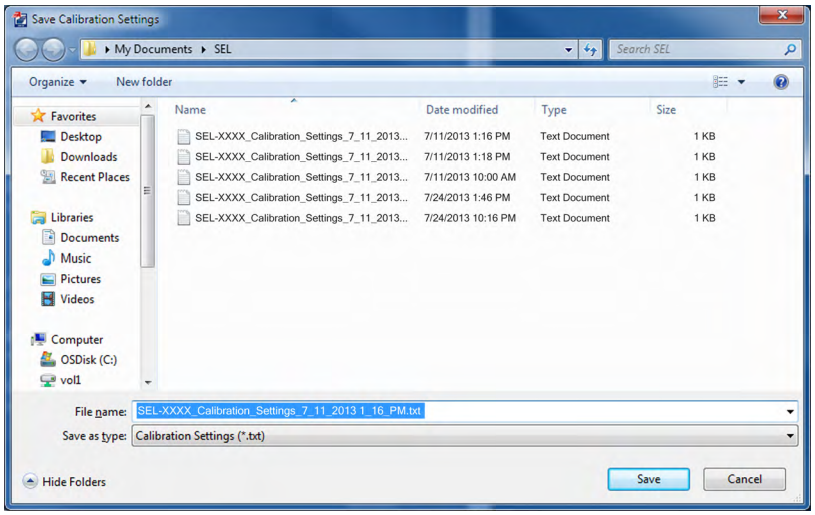

c. The **Transfer Status**: **Ymodem file read** window shows the transfer progress of the settings file. Selecting **Cancel** will stop the transfer. After the device settings are downloaded, select a file name and path to save the settings or accept the default, as shown.

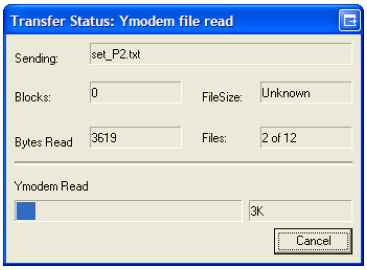

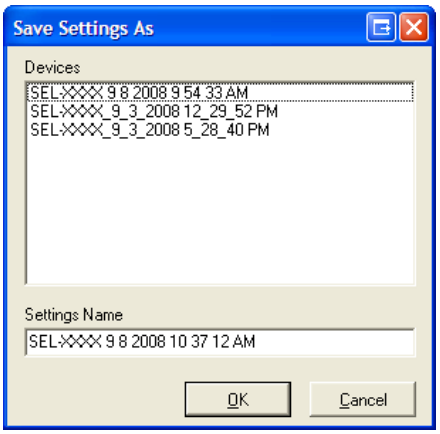

d. Select **Return to Firmware Loader** if this product does not have any event reports.

If there are any event reports to be saved, select the **Get Selected Event** button after selecting the events. After saving them, select the **Return to Firmware Loader** button.

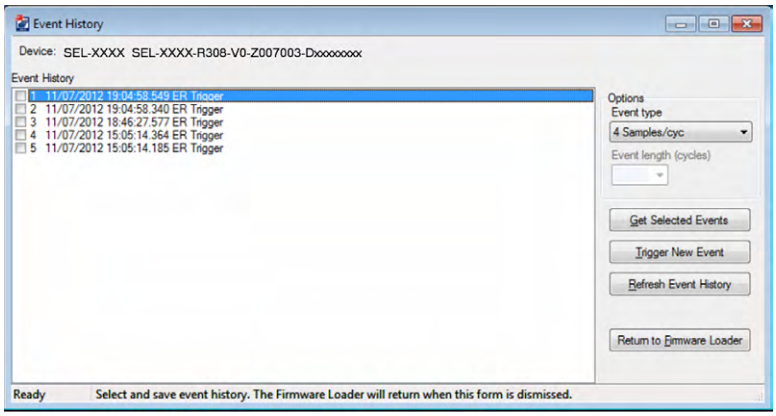

Step 2. Transfer firmware.

Select **Next** to begin the firmware transfer.

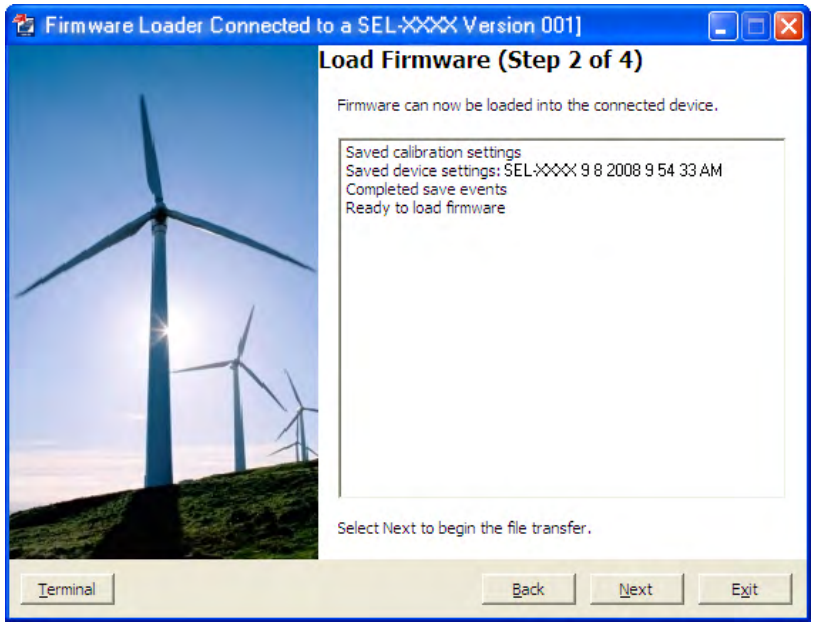

Step 3. Load firmware.

During this step, the device is put into SELBOOT. The transfer speed is maximized and the firmware transfer begins.

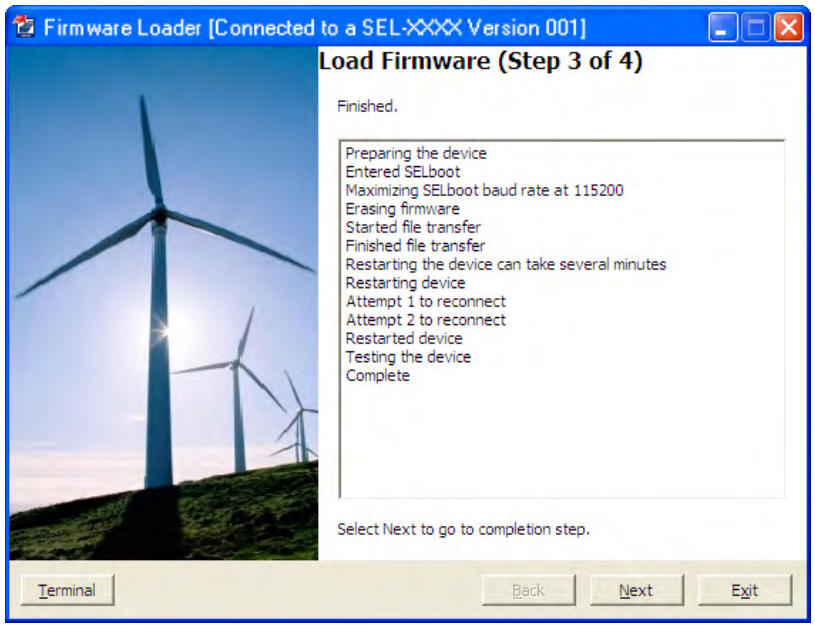

NOTE: The following screen can appear if you have one of the two conditions mentioned.

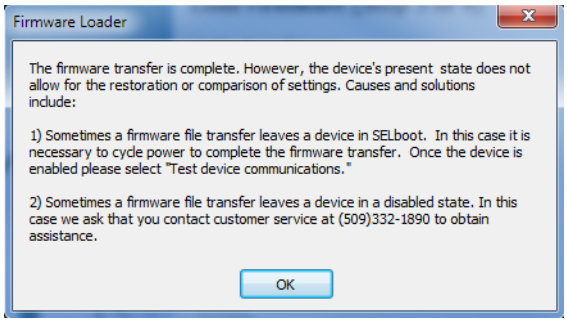

If the relay is disabled as mentioned in condition number 2, check for the **ENABLED** LED on the front panel of the relay. If the **ENABLED** LED is not illuminated and the **STATUS** command response shows a `Non_Vol Failure`, use the following procedure to restore the factory-default settings:

a. Select the **Terminal** button on the Firmware Load screen of QuickSet.

b. Set the communications software settings to 9600 bps, 8 data bits, and 1 stop bit.

c. Enter Access Level 2 by issuing the **2AC** command.

d. Issue the **R_S** command to restore the factory-default settings.

   The relay restarts and comes up ENABLED.

Step 4. Verify device settings.

Four verification options are provided. When enabled, these options perform as follows.

Test Device Communications. If the device cannot be restarted, then turn it off and back on to restart it. Once the device is enabled, this option reconnects and reinitializes the device.

Compare Device Settings. This option verifies settings by reading them from the device and comparing them with settings saved to the database.

Restore Device Settings. This option restores settings by writing settings saved in the database to the device. Settings are converted automatically, if necessary.

Load Firmware Into Another Device. Returns the wizard to *Step 1*: *Prepare Device* to repeat the firmware-loading process with another device.

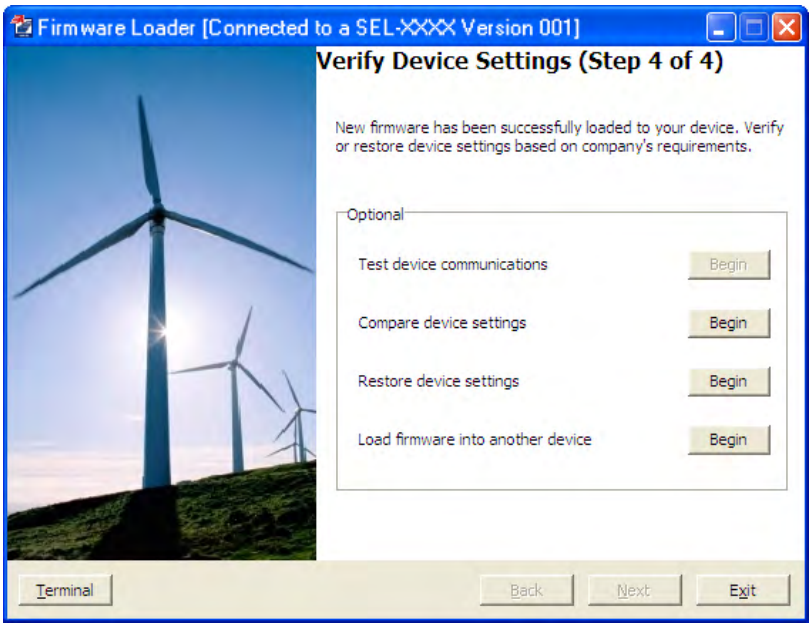

Upgrade Firmware Using a Terminal Emulator

The following instructions assume you have a working knowledge of your personal computer terminal emulation software. In particular, you must be able to modify your serial communications parameters (data rate, data bits, parity, etc.), select transfer protocol (Xmodem/CRC or 1k Xmodem/CRC), and transfer files (for example, send and receive binary files).

Step 1. If the relay is in service, open the relay control circuits.

Step 2. Connect the PC to the front-panel serial port and enter Access Level 2.

Step 3. Save the present relay settings.

You can use the PC software (described in the instruction manual PC software section) to save and restore settings easily. Otherwise, use the following steps.

a. Issue the following commands at the ASCII prompt:

SHO, **SHO L**, **SHO P**, **SHO R**, **SHO C**, etc.

b. Record all the settings for possible reentry after the firmware upgrade.

c. We recommend that you save all stored data in the relay, including EVENTS, before the upgrade.

NOTE: To save the calibration settings, enter **SHO C** from the terminal by logging in to CAL level using the CAL level password. The factory-default password for CAL level is CLARKE.

Step 4. Start upgrading of firmware.

a. Issue the **L_D** command to the relay.

b. Type **Y <Enter>** at the following prompt:

```
Disable relay to receive firmware (Y/N)?
```

c. Type **Y <Enter>** at the following prompt:

```
Are you sure (Y,N)?
```

The relay will send the `!>` prompt.

NOTE: Change the data rate of the relay serial port to 9600 before issuing the **L_D** command to start the upgrade process.

Step 5. Change the data rate, if necessary.

a. Type **BAU 115200 <Enter>**.

This will change the data rate of the communications port to 115200.

b. Change the data rate of the PC to 115200 to match the relay.

NOTE: If you have difficulty at 115200 bps, choose a slower data transfer rate (for example, 38400 bps or 57600 bps). Be sure to match the relay and PC data rates.

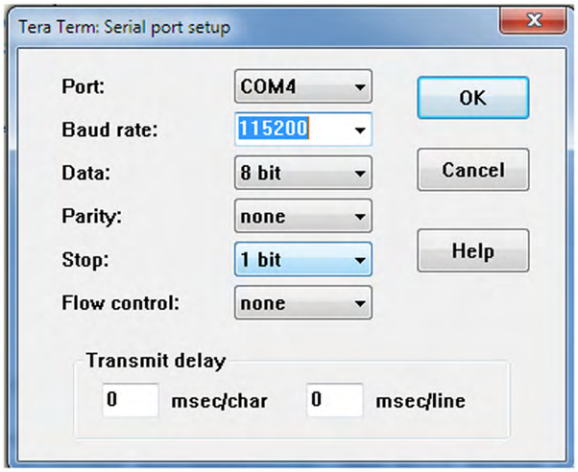

Step 6. Begin the transfer of new firmware to the relay by issuing the **REC** command.

Step 7. Type **Y** to erase the existing firmware or press **<Enter>** to abort.

Step 8. Press any key (for example, **<Enter>**) when the relay sends a prompt.

Step 9. Start the file transfer.

Select the send file option in your communications software.

Use the Xmodem protocol and send the file that contains the new firmware (for example, r101*xxxxx*.s19 or r101*xxxxx*.z19).

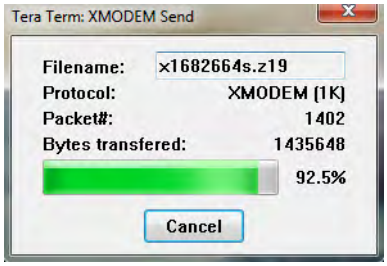

The file transfer takes less than 5–15 minutes at 115200 bps, depending on the product. After the transfer is complete, the relay restarts and returns to Access Level 0.

Figure B.1 shows the entire process.

```
=>>L_D <Enter>

Disable relay to receive firmware (Y,N)? Y <Enter>
Are you sure (Y,N)? Y <Enter>
Relay Disabled

BFID=BOOTLDR-R500-V0-Z000000-D20090925
!>BAU 115200 <Enter>
!>
!>REC <Enter>
This command uploads new firmware.
When new firmware is uploaded successfully, IED will erase old firmware,
load new firmware and restart.

Are you sure you want to erase the existing firmware(Y,N)?
Press any key to begin transfer and then start transfer at the terminal.
Erasing firmware.
Erase successful.
Writing new firmware.
Upload completed successfully. Attempting a restart.

=
```

Figure B.1 Firmware File Transfer Process

Step 10. The relay illuminates the **ENABLED** front-panel LED if the relay settings were retained through the download.

If the **ENABLED** LED is illuminated, proceed to *Step 11*.

If the **ENABLED** LED is not illuminated or the STATUS command response shows a `STATUS FAIL` or `Non_Vol Failure`, use the following procedure to restore the factory-default settings:

a. Set the communications software settings to 9600 bps, 8 data bits, and 1 stop bit.

b. Enter Access Level 2 by issuing the **2AC** command.

c. Issue the **R_S** command to restore the factory-default settings.

d. The relay then restarts with the factory-default settings.

e. Enter Access Level 2.

f. Restore relay settings back to the settings saved in *Step 3*.

Step 11. Change the data rate of the PC to match that of the relay prior to *Step 5*, and enter Access Level 2.

Step 12. Issue the **STATUS** command; verify all relay self-test results are OK.

Step 13. Apply current and voltage signals to the relay.

Step 14. Issue the **METER** command; verify that the current and voltage signals are correct.

Step 15. Autoconfigure the SEL communications processor port if you have a communications processor connected.

This step reestablishes automatic data collection between the SEL communications processor and the SEL relay. Failure to perform this step can result in automatic data collection failure when cycling communications processor power.

Protocol Verification for Relays With IEC 61850 Option

NOTE: A relay with IEC 61850 protocol requires the presence of one valid CID file to enable the protocol. You should only transfer a CID file to the relay if you want to implement a change in the IEC 61850 configuration or if new relay firmware does not support the current CID file version. If you transfer an invalid CID file, the relay will disable the IEC 61850 protocol, because it no longer has a valid configuration. To restart IEC 61850 protocol operation, you must transfer a valid CID file to the relay.

Perform the following steps to verify that the IEC 61850 protocol is still operational after a relay firmware upgrade and if not, reenable it. This procedure assumes that IEC 61850 was operational with a valid CID file immediately before initiating the relay firmware upgrade.

Step 1. Establish an FTP connection to the relay Ethernet port.

Step 2. Open the ERR.TXT file.

If the ERR.TXT file is empty, the relay found no errors during CID file processing and IEC 61850 should be enabled. Go to *Step 3* if ERR.TXT is empty.

If the ERR.TXT file contains error messages relating to CID file parsing, the relay has disabled the IEC 61850 protocol. Use ACSELERATOR Architect SEL-5032 Software to convert the existing CID file and make it compatible again.

a. Install the Architect software upgrade that supports your required CID file version.

b. Run Architect and open the project that contains the existing CID file for the relay.

c. Download the CID file to the relay.

Step 3. Upon connecting to the relay, Architect will detect the upgraded relay firmware and prompt you to allow it to convert the existing CID file to a supported version. Once converted, downloaded, and processed, the valid CID file allows the relay to reenable the IEC 61850 protocol.

Step 4. In the Telnet session, type **GOO <Enter>**.

Step 5. View the GOOSE status and verify that the transmitted and received messages are as expected.

The relay is now ready for your commissioning procedure.

Technical Support

We appreciate your interest in SEL products and services. If you have questions or comments, contact us at:

Schweitzer Engineering Laboratories, Inc.
2350 NE Hopkins Court
Pullman, WA 99163-5603 U.S.A.
Tel: +1.509.338.3838
Fax: +1.509.332.7990
Internet: selinc.com/support
Email: info@selinc.com

APPENDIX C

SEL Communications Processors

SEL Communications Protocols

The SEL-2664S supports SEL protocols and command sets shown in *Table C.1*.

Table C.1 Supported Serial Command Sets

Command Set	Description
SEL ASCII	Use this protocol to send ASCII commands and receive ASCII responses that are human readable with an appropriate terminal emulation program.
SEL Compressed ASCII	Use this protocol to send ASCII commands and receive Compressed ASCII responses that are comma-delimited for use with spreadsheet and database programs or for use by intelligent electronic devices.
SEL Fast Meter	Use this protocol to send binary commands and receive binary meter and target responses.
SEL Fast Operate	Use this protocol to receive binary control commands.
SEL Fast SER	Use this protocol to receive binary Sequential Events Recorder unsolicited responses.

SEL ASCII Commands

We originally designed SEL ASCII commands for communication between the relay and a human operator via a keyboard and monitor or a printing terminal. A computer with a serial port can also use the SEL ASCII protocol to communicate with the relay, collect data, and issue commands.

SEL Compressed ASCII Commands

The relay supports a subset of SEL ASCII commands identified as Compressed ASCII commands. Each of these commands results in a comma-delimited message that includes a checksum field. Most spreadsheet and database programs can directly import comma-delimited files. Devices with embedded processors connected to the relay can execute software to parse and interpret comma-delimited messages without expending the customization and maintenance labor needed to interpret nondelimited messages. The relay calculates a checksum for each line by numerically summing all of the bytes that precede the checksum field in the message. The program that uses the data can detect transmission errors in the message by summing the characters of the received message and comparing this sum to the received checksum.

Most commands are available only in SEL ASCII or Compressed ASCII format. Selected commands have versions in both standard SEL ASCII and Compressed ASCII formats. Compressed ASCII reports generally have fewer characters than conventional SEL ASCII reports because the compressed reports reduce blanks, tabs, and other white space between data fields to a single comma.

Table C.2 lists the Compressed ASCII commands and contents of the command responses.

Table C.2 Compressed ASCII Commands

Command	Response	Access Level
BNAME	ASCII names of Fast Meter status bits	0
CASCII	Configuration data of all Compressed ASCII commands available at access levels > 0	0
CEVENT	Event report	1
CHISTORY	List of events	1
CLDP	Profile Data	1
CMETER	Metering data, including fundamental, rms, and remote analogs	1
CPRO	Profile data in a format compatible with SYNCHROWAVE Event software.	1
CSE	Sequence Of Events Data	1
CSTATUS	Relay status	1
CSUMMARY	Summary of an event report	1
DNAME	ASCII names of digital I/O reported in Fast Meter	0
ID	Relay identification	0
SNS	ASCII names for SER data reported in Fast Meter	0

Interleaved ASCII and Binary Messages

SEL relays have two separate data streams that share the same physical serial port. Human data communication with the relay consist of ASCII character commands and reports that you view through use of a terminal or terminal emulation package. The binary data streams can interrupt the ASCII data stream to obtain information; the ASCII data stream continues after the interruption. This mechanism uses a single communications channel for ASCII communication (transmission of an event report, for example) interleaved with short bursts of binary data to support fast acquisition of metering data. The device connected to the other end of the link requires software that uses the separate data streams to exploit this feature. However, you do not need a device to interleave data streams to use the binary or ASCII commands. Note that XON, XOFF, and CAN operations operate on only the ASCII data stream.

An example of using these interleaved data streams is when the SEL-2664S communicates with an SEL communications processor. These SEL communications processors perform autoconfiguration by using a single data stream and SEL Compressed ASCII and binary messages. In subsequent operations, the SEL communications processor uses the binary data stream for Fast Meter and Fast Operate messages to populate a local database and to perform SCADA

operations. At the same time, you can use the binary data stream to connect transparently to the SEL-2664S and use the ASCII data stream for commands and responses.

SEL Fast Meter, Fast Operate, and Fast SER

SEL Fast Meter is a binary message that you solicit with binary commands. Fast Operate is a binary message for control. The relay can also send unsolicited Fast SER messages automatically. If the relay is connected to an SEL communications processor, these messages provide the mechanism that the communications processor uses for SCADA or DCS functions that occur simultaneously with ASCII interaction.

SEL Communications Processor

SEL offers SEL communications processors, powerful tools for system integration and automation. These devices provide a single point of contact for integration networks with a star topology, as shown in *Figure C.1*.

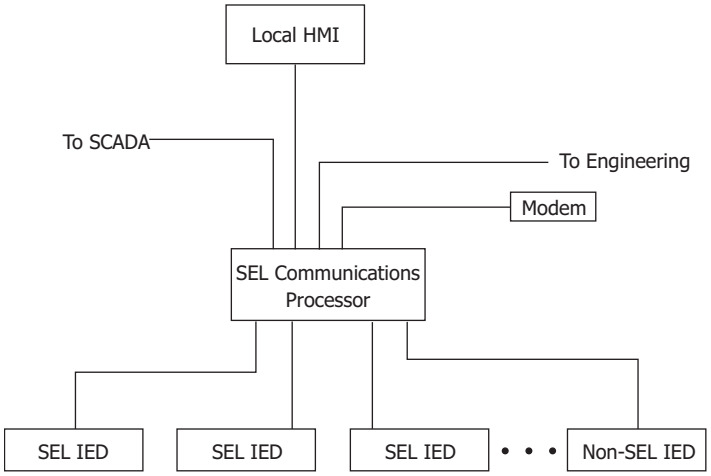

Figure C.1 SEL Communications Processor Star Integration Network

In the star topology network in *Figure C.1* the SEL communications processor offers the following substation integration functions:

- Collection of real-time data from SEL and non-SEL IEDs
- Calculation, concentration, and aggregation of real-time IED data into databases for SCADA, HMI, and other data consumers
- Access to the IEDs for engineering functions including configuration, report data retrieval, and control through local serial, remote dial-in, and Ethernet network connections
- Distribution of IRIG-B time-synchronization signal to IEDs based on external IRIG-B input, internal clock, or protocol interface
- Simultaneous collection of SCADA data and engineering connection to SEL IEDs over a single cable
- Automated dial-out on alarms

The SEL communications processors have 16 serial ports plus a front port. This port configuration does not limit the size of a substation integration project, because you can create a multitiered solution as shown in *Figure C.2*. In this multitiered system, the lower-tier SEL communications processors forward data to the upper-tier SEL communications processor that serves as the central point of access to substation data and substation IEDs.

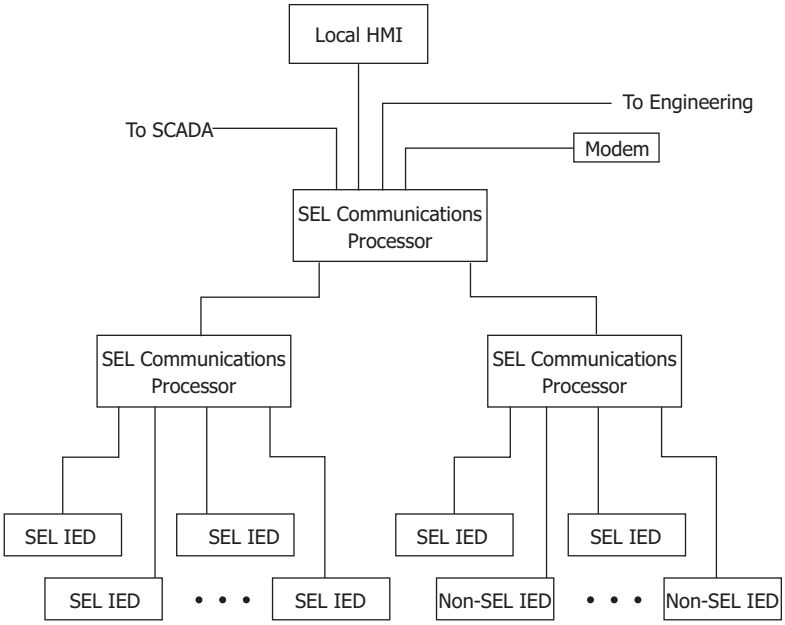

Figure C.2 Multitiered SEL Communications Processor Architecture

You can add additional communications processors to provide redundancy and eliminate possible single points of failure. SEL communications processors provide an integration solution with a reliability comparable to that of SEL relays. In terms of MTBF (mean time between failures), SEL communications processors are 100 to 1000 times more reliable than computer-based and industrial technology-based solutions.

Configuration of an SEL communications processor is different from other general-purpose integration platforms. You can configure SEL communications processors with a system of communication-specific keywords and data movement commands rather than programming in C or another general-purpose computer language. SEL communications processors offer the protocol interfaces listed in *Table C.3*.

Table C.3 SEL Communications Processors Protocol Interfaces (Sheet 1 of 2)

Protocol	Connect to
DNP3 Level 2 Outstation	DNP3 masters
Modbus® RTU Protocol	Modbus masters
SEL ASCII/Fast Message Slave	SEL protocol masters
SEL ASCII/Fast Message Master	SEL protocol slaves including other communications processors and SEL relays
ASCII and Binary auto messaging	SEL and non-SEL IED master and slave devices
Modbus Plus[a]	Modbus Plus peers with global data and Modbus Plus masters
FTP (File Transfer Protocol)[b]	FTP clients

Table C.3 SEL Communications Processors Protocol Interfaces (Sheet 2 of 2)

Protocol	Connect to
Telnet[b]	Telnet servers and clients
UCA2 GOMSFE[b]	UCA2 protocol masters
UCA2 GOOSE[b]	UCA2 protocol and peers

[a] Requires SEL-2711 Modbus Plus protocol card.
[b] Requires SEL-2701 Ethernet Processor.

SEL Communications Processor and Relay Architecture

You can apply SEL communications processors and SEL relays in a limitless variety of applications that integrate, automate, and improve station operation. Most system integration architectures utilizing SEL communications processors involve either developing a star network or enhancing a multidrop network.

Developing Star Networks

The simplest architecture using both the SEL-2664S and an SEL communications processor is shown in *Figure C.1*. In this architecture, the SEL communications processor collects data from the SEL-2664S and other station IEDs. The SEL communications processor acts as a single point of access for local and remote data consumers (local HMI, SCADA, engineers). The communications processor also provides a single point of access for engineering operations including configuration and the collection of report-based information.

By configuring a data set optimized to each data consumer, you significantly increase the utilization efficiency on each link. A system that uses an SEL communications processor to provide a protocol interface to an RTU has a shorter lag time (data latency); communications overhead is much less for a single data exchange conversation to collect all substation data (from a communications processor) than for many conversations required to collect data directly from each individual IED. You can further reduce data latency by connecting any SEL communications processor directly to the SCADA master and eliminating redundant communication processing in the RTU.

The SEL communications processor is responsible for the protocol interface, so you can install, test, and even upgrade the system in the future without disturbing protective relays and other station IEDs. This insulation of the protective devices from the communications interface assists greatly in situations where different departments are responsible for SCADA operation, communication, and protection.

SEL communications processors equipped with an SEL-2701 Ethernet Processor can provide a UCA2 interface to SEL-2664S relays and other serial IEDs. The SEL-2664S data appear in models in a virtual device domain. The combination of the SEL-2701 with an SEL communications processor offers a significant cost savings because you can use existing IEDs or purchase less expensive IEDs. For full details on applying the SEL-2701 with an SEL communications processor, see the *SEL-2701 Ethernet Processor Instruction Manual*.

The engineering connection can use either an Ethernet network connection through the SEL-2701 or a serial port connection. This versatility will accommodate the channel that is available between the station and the engineering center. SEL software can use either a serial port connection or an Ethernet network connection from an engineering workstation to the relays in the field.

Enhancing Multidrop Networks

You can also use an SEL communications processor to enhance a multidrop architecture similar to the one shown in *Figure C.3*. In this example, the SEL communications processor enhances a system that uses the SEL-2701 with an Ethernet HMI multidrop network. In the example, there are two Ethernet networks, the SCADA LAN and the Engineering LAN. The SCADA LAN provides real-time data directly to the SCADA Control Center via a protocol gateway and to the human-machine interface (HMI).

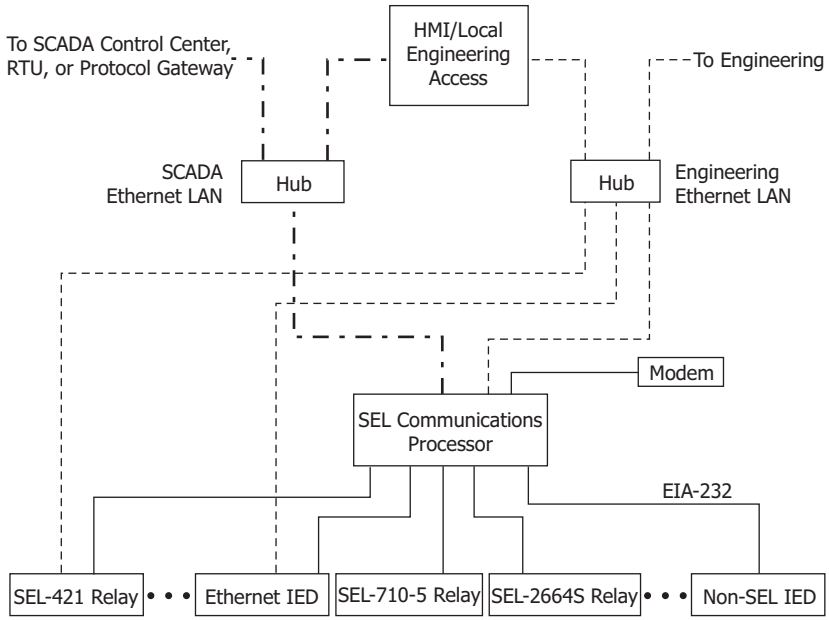

Figure C.3 Enhancing Multidrop Networks With SEL Communications Processors

In this example, the SEL communications processor provides the following enhancements when compared to a system that employs only the multidrop network:

- Ethernet access for IEDs with serial ports
- Backup engineering access through the dial-in modem
- IRIG-B time signal distribution to all station IEDs
- Integration of IEDs without Ethernet
- Single point of access for real-time data for SCADA, HMI, and other uses
- Significant cost savings by use of existing IEDs with serial ports

SEL Communications Processor Example

This example demonstrates the data and control points available in the SEL communications processor when you connect an SEL-2664S. The physical configuration used in this example is shown in *Figure C.4*.

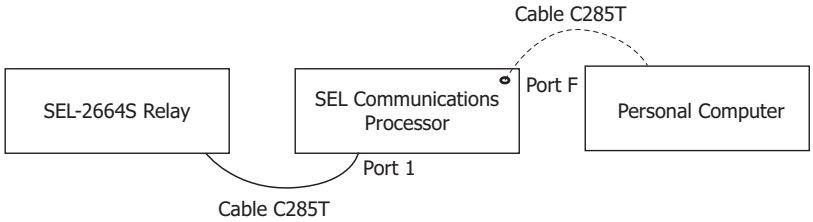

Figure C.4 Example of SEL Relay and SEL Communications Processor Configuration

Table C.4 shows the Port 1 settings for the SEL communications processor.

Table C.4 SEL Communications Processor Port 1 Settings

Setting Name	Setting	Description
DEVICE	S	Connected device is an SEL device
CONFIG	Y	Allow autoconfiguration for this device
PORTID	Relay 1	Name of connected relay[a]
BAUD	19200	Channel speed of 19200 bits a second[a]
DATABIT	8	Eight data bits[a]
STOPBIT	1	One stop bit
PARITY	N	No parity
RTS_CTS	N	Hardware flow control enabled
XON_XOFF	Y	Enable XON/XOFF flow control
TIMEOUT	30	Idle time-out that terminates transparent connections of 30 seconds

[a] Automatically collected by the SEL communications processor during autoconfiguration.

Data Collection

The SEL communications processor is configured to collect data from the SEL-2664S, using the list in *Table C.5*.

Table C.5 SEL Communications Processor Data Collection Automessages

Message	Data Collected
20METER	Power system metering data
20TARGET	Selected Relay Word bit elements
20HISTORY	History Command (ASCII)
20STATUS	Status Command (ASCII)

Table C.6 shows the automessage (**SET A**) settings for the SEL communications processor.

Table C.6 SEL Communications Processor Port 1 Automatic Messaging Settings

Setting Name	Setting	Description
AUTOBUF	Y	Save unsolicited messages
STARTUP	ACC\nOTTER\n	Automatically log in at Access Level 1
SEND_OPER	Y	Send Fast Operate messages for remote bit and breaker bit control
REC_SER	N	Automatic Sequential Events Recorder data collection disabled
NOCONN	NA	No SELOGIC® control equation entered to selectively block connections to this port
MSG_CNT	2	Two automessages
ISSUE1	P00:00:01.0	Issue Message 1 every second
MESG1	20METER	Collect metering data
ISSUE2	P00:00:01.0	Issue Message 2 every second
MESG2	20TARGET	Collect Relay Word bit data
ARCH_EN	N	Archive memory disabled
USER	0	No USER region registers reserved

Table C.7 shows the map of regions in the SEL communications processor for data collected from the SEL-2664S. Use the **MAP *n*** command to view these data.

Table C.7 SEL Communications Processor Port 1 Region Map

Region	Data Collection Message Type	Region Name	Description
D1	Binary	METER	Relay metering data
D2	Binary	TARGET	Relay Word bit data
D3–D8	n/a	n/a	Unused
A1–A3	n/a	n/a	Unused
USER	n/a	n/a	Unused

Relay Metering Data

Table C.8 shows the list of meter data available in the SEL communications processor and the location and data type for the memory areas within D1 (Data Region 1). The type field indicates the data type and size. The *int* type is a 16-bit integer. The *float* type is a 32-bit IEEE floating point number. Use the **VIE *n*:D1** command to view these data.

Table C.8 Communications Processor METER Region Map

Item	Starting Address	Type
_YEAR	2000h	int
DAY_OF_YEAR	2001h	int
TIME(ms)	2002h	int[2]
MONTH	2004h	char
DATE	2005h	char
YEAR	2006h	char
HOUR	2007h	char
MIN	2008h	char
SECONDS	2009h	char
MSEC	200Ah	int
RES_S	200Bh	float
CAP_S	200Dh	float
NGR	200Fh	float
FLDRES	2011h	float
VN1	2013h	float
VN3	2015h	float
VN_RMS	2017h	float
I_SRC	2019h	float
IN_RMS	201Bh	float
VN_F1	201Dh	float
IN_F1	201Fh	float
RES_F1	2021h	float
VN_F2	2023h	float
IN_F2	2025h	float
RES_F2	2027h	float
VN_F3	2029h	float
IN_F3	202Bh	float
RES_F3	202Dh	float
VN_F4	202Fh	float
IN_F4	2031h	float
RES_F4	2033h	float

Relay Word Bits Information

Table C.9 lists the Relay Word bit data available in the SEL communications processor TARGET region.

Table C.9 Communications Processor TARGET Region

Address	Relay Word Bits (in Bits 7–0)							
	7	6	5	4	3	2	1	0
2804h	*	*	*	*	*	PWRUP	STSET	*
2805h	See *Table H.1*, Row 0							
2806h	See *Table H.1*, Row 1							
2807h	See *Table H.1*, Row 2							
2808h	See *Table H.1*, Row 3							
2809h	See *Table H.1*, Row 4							
280Ah	See *Table H.1*, Row 5							
280Bh	See *Table H.1*, Row 6							
280Ch	See *Table H.1*, Row 7							
280Dh	See *Table H.1*, Row 8							
280Eh	See *Table H.1*, Row 9							
280Fh	See *Table H.1*, Row 10							
2810h	See *Table H.1*, Row 11							
2811h	See *Table H.1*, Row 12							
• • •	• • •							
2826h	See *Table H.1*, Row 33							

Control Points

The SEL communications processor can pass control messages, called Fast Operate messages, to the SEL-2664S automatically. You must enable Fast Operate messages by using the FASTOP setting in the SEL-2664S port settings for the port connected to the SEL communications processor. You must also enable Fast Operate messages in the SEL communications processor by setting the automessage setting SEND_OPER equal to Y.

NOTE: To use the Fast Operate function, the FASTOP setting must be set to Y (see *Section 6: Settings*).

When you enable Fast Operate functions, the SEL communications processor automatically sends messages to the relay for changes in remote bits RB01–RB08 on the corresponding SEL communications processor port. For example, if you set RB01 on **PORT 1** in the SEL communications processor, it automatically sets RB01 in the SEL-2664S.

APPENDIX D

DNP3 Communications

Overview

The SEL-2664S provides a Distributed Network Protocol Version 3.0 (DNP3) Level 2 Outstation interface for direct serial and LAN/WAN network connections to the device.

This section covers the following topics:

- *Introduction to DNP3* on page D.1
- *DNP3 in the SEL-2664S* on page D.6
- *DNP3 Documentation* on page D.13

Introduction to DNP3

A supervisory control and data acquisition (SCADA) manufacturer developed the first versions of DNP from the lower layers of IEC 60870-5. Originally designed for use in telecontrol applications, Version 3.0 of the protocol has also become popular for local substation data collection. DNP3 is one of the protocols included in the *IEEE Recommended Practice for Data Communications Between Remote Terminal Units and Intelligent Electronic Devices in a Substation*.

The DNP Users Group maintains and publishes DNP3 standards. See the DNP Users Group website, dnp.org, for more information on standards, implementers, and tools for working with DNP3.

DNP3 Specifications

DNP3 is a feature-rich protocol with many ways to accomplish tasks, defined in an eight-volume series of specifications. Volume 8 of the specification, called the Interoperability Specification, simplifies DNP3 implementation by providing four standard interoperable implementation levels. The levels are listed in *Table D.1*.

Table D.1 DNP3 Implementation Levels

Level	Description	Equipment Types
1	Simple: limited communications requirements	Meters, simple IEDs
2	Moderately complex: monitoring and metering devices and multifunction devices that contain more data	Protective relays, RTUs
3	Sophisticated: devices with great amounts of data or complex communications requirements	Large RTUs, SCADA masters
4	Enhanced: additional data types and functionality for more complex requirements	Large RTUs, SCADA masters

Each level is a proper superset of the previous lower-numbered level. A higher-level device can act as a master to a lower-level device, but can only use the data types and functions implemented in the lower level device. For example, a typical SCADA master is a Level 3 device and can use Level 2 (or lower) functions to poll a Level 2 (or lower) device for Level 2 (or lower) data. Similarly, a lower-level device can poll a higher-level device, but the lower level device can only access the features and data available to its level.

In addition to the eight-volume DNP3 specification, the protocol is further refined by conformance requirements, optional features, and a series of technical bulletins. The technical bulletins supplement the specifications with discussions and examples of specific features of DNP3.

Data Handling

Objects

DNP3 uses a system of data references called objects, defined by the Basic 4 standard object library. Each subset level specification requires a minimum implementation of object types and recommends several optional object types. DNP3 object types, commonly referred to as objects, are specifications for the type of data the object carries. An object can include a single value or more complex data. Some objects serve as shorthand references for special operations, including collections of data, time synchronization, or even all data within the DNP3 device.

If there can be more than one instance of a type of object, then each instance of the object includes an index that makes it unique. For example, each binary status point (Object 1) has an index. If there are 16 binary status points, these points are Object 1, Index 0 through Object 1, Index 15.

Each object also includes multiple versions called variations. For example, Object 1 (binary inputs) has three variations: 0, 1, and 2. You can use variation 0 to request all variations, variation 1 to specify binary input values only, and variation 2 to specify binary input values with status information.

Each DNP3 device has both a list of objects and a map of object indices. The list of objects defines the available objects, variations, and qualifier codes. The map defines the indices for objects that have multiple instances and defines what data or control points correspond with each index.

A master initiates all DNP3 message exchanges except unsolicited data. DNP3 terminology describes all points from the perspective of the master. Binary points for control that move from the master to the outstation are called Binary Outputs, while binary status points within the outstation are called Binary Inputs.

Function Codes

Each DNP3 message includes a function code. Each object has a limited set of function codes that a master can use to manipulate the object. The object listing for the device shows the permitted function codes for each type of object. The most common DNP3 function codes are listed in *Table D.2*.

Table D.2 Selected DNP3 Function Codes

Function Code	Function	Description
1	Read	Request data from the outstation
2	Write	Send data to the outstation
3	Select	First part of a Select Before Operate operation
4	Operate	Second part of a Select Before Operate operation
5	Direct operate	One-step operation with reply
6	Direct operate, no reply	One-step operation with no reply

Qualifier Codes and Ranges

DNP3 masters use qualifier codes and ranges to make requests for specific objects by index. Qualifier codes specify the style of range, and the range specifies the indices of the objects of interest. DNP3 masters use qualifier codes to compose the shortest, most concise message possible when requesting points from a DNP3 outstation.

For example, the qualifier code 01 specifies that the request for points will include a start address and a stop address. Each of these two addresses uses two bytes. An example request using qualifier code 01 might have the four hexadecimal byte range field, 00h 04h 00h 10h, which specifies points in the range 4 to 16.

Access Methods

DNP3 has many features that help obtain maximum possible message efficiency. DNP3 masters send requests with the least number of bytes using special objects, variations, and qualifiers that reduce the message size. Other features eliminate the continual exchange of static (unchanging) data values. These features optimize use of bandwidth and maximize performance over a connection of any speed.

DNP3 event data collection eliminates the need to use bandwidth to transmit values that have not changed. Event data are time-stamped records that show when observed measurements changed. For binary points, the remote device (DNP3 outstation) logs changes from logical 1 to logical 0 and from logical 0 to logical 1. For analog points, the outstation device logs changes that exceed a dead band. DNP3 outstation devices collect event data in a buffer that either the master can request or the device can send to the master without a request message. Data sent from the outstation to the master without a polling request are called unsolicited data.

DNP3 data fit into one of four event classes: 0, 1, 2, or 3. Class 0 is reserved for reading the present value data (static data). Classes 1, 2, and 3 are event data classes. The meaning of Classes 1 to 3 is arbitrary and defined by the application at hand. With outstations that contain great amounts of data or in large systems,

the three event classes provide a framework for prioritizing different types of data. For example, you can poll once a minute for Class 1 data, once an hour for Class 2 data, and once a day for Class 3 data.

DNP3 also supports static polling: simple polling of the present value of data points within the outstation. By combining event data, unsolicited polling, and static polling, you can operate your system in one of the four access methods shown in *Table D.3*.

The access methods listed in *Table D.3* are listed in order of increasing communications efficiency. With various trade-offs, each method is less demanding of communications bandwidth than the previous one. For example, unsolicited report-by-exception consumes less communications bandwidth than polled report-by-exception because that method does not require polling messages from the master. To properly evaluate which access method provides optimum performance for your application, you must also consider overall system size and the volume of data communication expected.

Table D.3 DNP3 Access Methods

Access Method	Description
Polled static	Master polls for present value (Class 0) data only
Polled report-by-exception	Master polls frequently for event data and occasionally for Class 0 data
Unsolicited report-by-exception	Outstation devices send unsolicited event data to the master, and the master occasionally polls for Class 0 data
Quiescent	Master never polls and relies on unsolicited reports only

Binary Control Operations

DNP3 masters use Object 12, control device output block, to perform DNP3 binary control operations. The control device output block has both a trip/close selection and a code selection. The trip/close selection allows a single DNP3 index to operate two related control points such as trip and close or raise and lower. Trip/close pair operation is not recommended for new DNP3 devices, but is often included for interoperability with older DNP3 master implementations.

The control device output block code selection specifies either a latch or pulse operation on the point. In many cases, DNP3 outstations have only a limited subset of the possible combinations of the code field. Sometimes, DNP3 outstations assign special operation characteristics to the latch and pulse selections. *Table D.12* describes control point operation for the SEL-2664S.

Conformance Testing

In addition to the protocol specifications, the DNP Users Group has approved conformance-testing requirements for Level 1 and Level 2 devices. Some implementers perform their own conformance specification testing, while some contract with independent companies to perform conformance testing.

Conformance testing does not always guarantee that a master and outstation will be fully interoperable (that is, work together properly for all implemented features). Conformance testing does help to standardize the testing procedure and move the DNP3 implementers toward a higher level of interpretability.

DNP3 Serial Network Issues

Data Link Layer Operation

DNP3 employs a three-layer version of the seven-layer OSI (Open Systems Interconnect) model called the enhanced performance architecture. The layer definition helps to categorize functions and duties of various software components that make up the protocol. The middle layer, the Data Link Layer, includes several functions for error checking and media access control.

A feature called data link confirmation is a mechanism that provides positive confirmation of message receipt by the receiving DNP3 device. While this feature helps you recognize a failed device or failed communications link quickly, it also adds significant overhead to the DNP3 conversation. You should consider whether you require this link integrity function in your application at the expense of overall system speed and performance.

The DNP3 technical bulletin (*DNP Confirmation and Retry Guidelines 9804-002*) on confirmation processes recommends against using data link confirmations because these processes can add to traffic in situations where communication is marginal. The increased traffic will reduce connection throughput further, possibly preventing the system from operating properly.

Network Medium Contention

When more than one device requires access to a single (serial) network medium, you must provide a mechanism to resolve the resulting network medium contention. For example, unsolicited reporting results in network medium contention if you do not design your serial network as a star topology of point-to point connections or use carrier detection on a multidrop network.

To avoid collisions among devices trying to send messages, DNP3 includes a collision avoidance feature. Before sending a message, a DNP3 device listens for a carrier signal to verify that no other node is transmitting data. The device transmits if there is no carrier or waits for a random time before transmitting. However, if two nodes both detect a lack of carrier at the same instant, these two nodes could begin simultaneous transmission of data and cause a data collision. If your serial network allows for spontaneous data transmission including unsolicited event data transmissions, you also must use application confirmation to provide a retry mechanism for messages lost due to data collisions.

DNP3 LAN/WAN Overview

The main process for carrying DNP3 over an Ethernet Network (LAN/WAN) involves encapsulating the DNP3 data link layer data frames within the transport layer frames of the IP suite. This allows the IP stack to deliver the DNP3 data link layer frames to the destination in place of the original DNP3 physical layer.

The DNP User Group Technical Committee has recommended the following guidelines for carrying DNP3 over a network:

- DNP3 shall use the IP suite to transport messages over a LAN/WAN
- Ethernet is the recommended physical link, though others can be used
- TCP must be used for WANs
- TCP is strongly recommended for LANs
- UDP can be used for highly reliable single segment LANs

NOTE: Link layer confirmations are explicitly disabled for DNP3 LAN/WAN. The IP suite provides a reliable delivery mechanism, which is backed up at the application layer by confirmations when required.

- UDP is necessary if broadcast messages are required
- The DNP3 protocol stack shall be retained in full
- Link layer confirmations shall be disabled

The Technical Committee has registered a standard port number, 20000, for DNP3 with the Internet Assigned Numbers Authority (IANA). This port is used for either TCP or UDP.

TCP/UDP Selection

The Committee recommends the selection of TCP or UDP protocol as noted in the guidelines in *Table D.4*.

Table D.4 TCP/UDP Selection Guidelines

Use in the case of...	TCP	UDP
Most situations	X	
Non-broadcast or multicast	X	
Mesh Topology WAN	X	
Broadcast		X
Multicast		X
High-reliability single-segment LAN		X
Pay-per-byte, non-mesh WAN, for example, Cellular Digital Packet Data (CDPD)		X
Low priority data, for example, data monitor or configuration information		X

DNP3 in the SEL-2664S

The SEL-2664S is a DNP3 Level 2 remote (Outstation) device.

Data Access

Table D.5 lists DNP3 data access methods along with corresponding SEL-2664S settings. You must select a data access method and configure each DNP3 master for polling as specified.

NOTE: Because unsolicited messaging is problematic in most circumstances, SEL recommends using the polled report-by-exception access method to maximize performance and minimize risk of configuration problems.

NOTE: In the SEL-2664S columns, the suffix n represents the DNP3 session number from 1 to 3. All settings with the same numerical suffix comprise the complete DNP3 session configuration.

Table D.5 DNP3 Access Methods (Sheet 1 of 2)

Access Method	Master Polling	SEL-2664S Settings
Polled static	Class 0	Set ECLASSB*n*, ECLASSC*n*, ECLASSA*n* to 0; UNSOL*n* to No
Polled report-by-exception	Class 0 occasionally, Class 1, 2, 3 frequently	Set ECLASSB*n*, ECLASSC*n*, ECLASSA*n* to the necessary event class; UNSOL*n* to No

Table D.5 DNP3 Access Methods (Sheet 2 of 2)

Access Method	Master Polling	SEL-2664S Settings
Unsolicited report-by-exception	Class 0 occasionally, optional Class 1, 2, 3 less frequently; mainly relies on unsolicited messages	Set ECLASSB*n*, ECLASSC*n*, ECLASSA*n* to the necessary event class; set UNSOL*n* to Yes and PUNSOL*n* to Yes or No
Quiescent	Class 0, 1, 2, 3 never; relies completely on unsolicited messages	Set ECLASSB*n*, ECLASSC*n*, ECLASSA*n* to the necessary event class; set UNSOL*n* and PUNSOL*n* to Yes.

In both the unsolicited report-by-exception and quiescent polling methods shown in *Table D.5*, you must make a selection for the PUNSOL*n* setting. This setting enables or disables unsolicited data reporting at turn on. If your DNP3 master can send a message to enable unsolicited reporting on the SEL-2664S, you should set PUNSOL*n* to No.

While automatic unsolicited data transmission on turn on is convenient, this can cause problems if your DNP3 master is not prepared to start receiving data immediately on turn on. If the master does not acknowledge the unsolicited data with an Application Confirm, the device resends the data until it is acknowledged. On a large system, or in systems where the processing power of the master is limited, you can have problems when several devices simultaneously begin sending data and waiting for acknowledgment messages.

With the SEL-2664S, you set the conditions for transmitting unsolicited event data on a class-by-class basis. You can also assign points to event classes on a point-by-point basis (see *Control Point Operation* on page D.22) and prioritize data transmission with these event class features. For example, you might place high-priority points in event class 1 and set it with low thresholds (NUMEVE*n* and AGEEVE*n* settings) so that changes to these points are sent to the master quickly. You can then place low priority data in event class 2 with higher thresholds.

If the SEL-2664S does not receive an Application Confirm in response to unsolicited data, it waits for ETIMEO*n* seconds and then repeats the unsolicited message. To avoid clogging the network with unsolicited data retries, use the URETRY*n* and UTIMEO*n* settings to increase the retry time when the number of retries exceeds that set in URETRY*n*. When URETRY*n* is exceeded, the SEL-2664S pauses UTIMEO*n* seconds and then transmits the unsolicited data again. *Figure D.1* provides an example with URETRY*n* = 2.

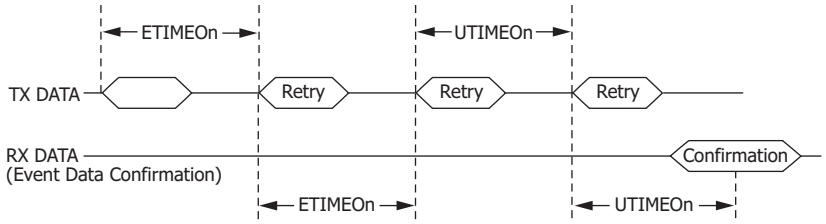

Figure D.1 Application Confirmation Timing With URETRY n = 2

Collision Avoidance

If your application uses unsolicited reporting on a serial network, you must select a half-duplex medium or a medium that includes carrier detection to avoid data collisions. EIA-485 two-wire networks are half-duplex. EIA-485 four-wire networks do not provide carrier detection, while EIA-232 systems support carrier detection. DNP3 LAN/WAN does not require these settings because it uses features of the IP suite for collision avoidance.

The SEL-2664S uses Application Confirmation messages to guarantee delivery of unsolicited event data before erasing the local event data buffer. Data collisions are typically resolved when messages are repeated until confirmed.

The SEL-2664S pauses for a random delay between the settings MAXDLY and MINDLY when it detects a carrier through data on the receive line or the CTS pin. For example, if you use the settings of 0.10 seconds for MAXDLY and 0.05 seconds for MINDLY, the SEL-2664S inserts a random delay of 50 to 100 ms (milliseconds) between the end of carrier detection and the start of data transmission (see *Figure D.2*).

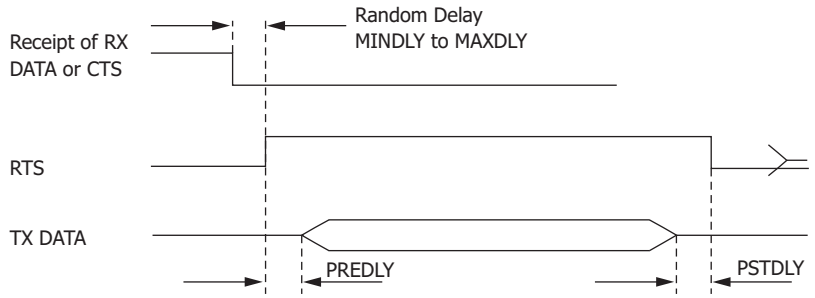

Figure D.2 Message Transmission Timing

Transmission Control

NOTE: PREDLY and POSTDLY settings are only available for EIA-232 and EIA-485 serial port sessions.

If you use a media transceiver (for example, EIA-232 to EIA-485) or a radio system for your DNP3 network, you can adjust data transmission properties. Use the PREDLY and POSTDLY settings to provide a delay between RTS signal control and data transmission (see *Figure D.2*). For example, an EIA-485 transceiver typically requires 10 to 20 ms to change from receive to transmit. If you set the pre-delay to 30 ms, you avoid data loss from the data transmission beginning at the same time as the RTS signal assertion.

Event Data

DNP3 event data objects contain change-of-state and time-stamp information that the SEL-2664S collects and stores in a buffer. Points assigned in the Binary Input Map that are also assigned in the Sequential Events Recorder (SER) settings carry the time stamp of actual occurrence. Binary input points not assigned in the SER settings carry a time stamp based on the DNP map scan time. This can be significantly delayed from when the original source changed and should not be used for sequence-of-events determination. The DNP map is scanned approximately once a second to generate events. You can configure the SEL-2664S to either report the data without a polling request from the master (unsolicited data) or hold the data until the master requests it with an event poll message.

With the event class settings ECLASSB*n*, ECLASSC*n*, and ECLASSA*n*, you can set the event class for binary, counter, and analog inputs for session *n*. You can use the classes as a simple priority system for collecting event data. The SEL-2664S does not treat data of different classes differently with respect to message scanning, but it does allow the master to perform independent class polls.

NOTE: Most RTUs that act as substation DNP3 masters perform an event poll that collects event data of all classes simultaneously. You must confirm that the polling configuration of your master allows independent polling for each class before implementing separate classes in the SEL-2664S.

For event data collection you must also consider and enter appropriate settings for dead band and scaling operation on analog points shown in *Table D.7*. You can either:

- set and use default dead band and scaling according to data type, or
- use a custom data map to select dead bands on a point-by-point basis.

See *Control Point Operation* on page D.22 for a discussion of how to set scaling and dead-band operation on a point-by-point basis. Dead bands for analog inputs are modified at run-time by writing to object 34.

The settings ANADBA*n*, ANADBV*n*, and ANADBM*n* control default dead-band operation for each type of analog data. Because DNP3 Objects 30 and 32 use integer data, you must use scaling to send digits after the decimal point and avoid rounding to a simple integer value.

With no scaling, the value of 12.632 would be sent as 12. With a scaling setting of 1, the value transmitted is 126. With a scaling setting of 3, the value transmitted is 12632. You must make certain that the maximum value does not exceed 32767 if you are polling the default 16-bit variations for Objects 30 and 32, but you can send some decimal values using this technique. You must also configure the master to perform the appropriate division on the incoming value to display it properly.

You can set the default analog value scaling with the DECPLA*n*, DECPLV*n*, and DECPLM*n* settings. Application of event reporting dead bands occurs after scaling. For example, if you set DECPLA*n* to 2 and ANADBA*n* to 10, a measured current of 10.14 amperes would be scaled to the value 1014 and would have to increase to more than 1024 or decrease to less than 1004 (a change in magnitude of ± 0.1 amperes) for the device to report a new event value.

Phase angles have a default scale factor of 10, and the ANADBM dead-band setting applies to them. For the angles to generate events, the corresponding magnitude also has to exceed its dead-band setting (ANADBA).

The SEL-2664S uses the NUMEVE*n* and AGEEVE*n* settings to decide when to send unsolicited data to the master. The device sends an unsolicited report when the total number of events accumulated in the event buffer for master *n* reaches NUMEVE*n*. The device also sends an unsolicited report if the age of the oldest event in the master n buffer exceeds AGEEVE*n*. The SEL-2664S has the buffer capacities listed in *Table D.6*.

Table D.6 SEL-2664S Event Buffer Capacity

Type	Maximum Number of Events
Binary	1024
Analog	100
Counters	32

Binary Controls

The SEL-2664S provides more than one way to control individual points. The SEL-2664S maps incoming control points either to remote bits or to internal command bits that cause circuit breaker operations. *Table D.12* lists control points and control methods available in the SEL-2664S.

A DNP3 technical bulletin (*Control Relay Output Block Minimum Implementation 9701-002*) recommends that you use one point an Object 12, control block output device. You can use this method to perform Pulse On, Pulse Off, Latch On, and Latch Off operations on selected remote bits.

If your master does not support the single-point-per-index messages or single operation database points, you can use the trip/close operation or use the code field in the DNP3 message to specify operation of the points shown in *Analog Inputs* on page D.28.

Time Synchronization

The accuracy of DNP3 time synchronization is insufficient for most protection and oscillography needs. DNP3 time synchronization provides backup time synchronization in the event the device loses primary synchronization through the IRIG-B input. You can enable time synchronization with the TIMERQ*n* setting and then use Object 50, Variation 1, and Object 52, Variation 2, to set the time via the Session *n* DNP3 master (Object 50, variation 3 for DNP3 LAN/WAN).

By default, the SEL-2664S accepts and ignores time set requests (TIMERQ*n* = I for "ignore"). (This mode allows the SEL-2664S to use a high accuracy, IRIG time source, but still interoperate with DNP3 masters that send time synchronization messages.) It can be set to request time synchronization periodically by setting the TIMERQ*n* setting to the required period. It can also be set to not request, but accept time synchronization (TIMERQ*n* = M for "master").

Modem Support

The SEL-2664S DNP implementation includes modem support for serial ports. Your DNP3 master can dial-in to the SEL-2664S and establish a DNP3 connection. The SEL-2664S can automatically dial out and deliver unsolicited DNP3 event data.

When the device dials out, it waits for the "CONNECT" message from the local modem and for assertion of the device CTS line before continuing the DNP transaction. This requires a connection from the modem DCD to the device CTS line.

NOTE: Contact SEL for information on serial cable configurations and requirements for connecting your SEL-2664S to other devices.

You can either connect the modem to a computer and configure it before connecting it to the SEL-2664S, or program the appropriate modem setup string in the modem startup string setting MSTR. You should use the PH_NUM1 and (optional) PH_NUM2 settings to set the phone numbers that you want the SEL-2664S to call. The SEL-2664S will automatically send the ATDT modem dial command and then the contents of the PH_NUM1 setting when dialing the modem. If PH_NUM2 is set, the RETRY1 setting is used to configure the number of times the SEL-2664S tries to dial PH_NUM1 before dialing PH_NUM2. Similarly, the RETRY2 setting is the number of attempts the SEL-2664S tries to dial PH_NUM2 before trying PH_NUM1. MDTIME sets the length of time from initiating the call to declaring it failed because of no connection, and MDRET sets the time between dial-out attempts.

NOTE: RTS/CTS hardware flow control is not available for a DNP3 modem connection. You must use either X-ON/X-OFF software flow control or set the port data speed slower than the effective data rate of the modem.

The settings PH_NUM1 and PH_NUM2 must conform to the AT modem command set dialing string standard, including:

- A comma (,) inserts a four second pause
- If necessary, use a 9 to reach an outside line
- Include a 1 and the area code if the number requires long distance access
- Add any special codes your telephone service provider designates to block call waiting and other telephone line features.

DNP3 Settings

The DNP3 port configuration settings available on the SEL-2664S are shown in *Table D.7*. You can enable DNP3 on Ethernet Port 1 or on any of the serial Ports 2 through 4, to a maximum of three concurrent DNP3 sessions. Each session defines the characteristics of the connected DNP3 Master, to which you assign one of the three available custom maps. Some settings only apply to DNP3 LAN/WAN, and are visible only when configuring the Ethernet Port. For example, you only have the ability to define multiple sessions on Port 1, the Ethernet port. Likewise, settings applicable to serial DNP3 are visible only when configuring a serial port.

Table D.7 Port DNP3 Protocol Settings (Sheet 1 of 2)

Name	Description	Range	Default
EDNP[a]	Enable DNP3 Sessions	0–3	0
DNPNUM[a]	DNP3 TCP and UDP Port	1–65534	20000
DNPADR	Device DNP3 address	0–65519	0
Session 1 Settings			
DNPIP1[a]	DNP Master IP address (zzz.yyy.xxx.www)	15 characters	“”
DNPTR1[a]	Transport protocol	UDP, TCP	TCP
DNPUDP1[a]	UDP response port	REQ, 1–65534	20000
REPADR1	DNP3 address of the Master to send messages to	0–65519	1
DNPMAP1	DNP3 Session Custom Map	1–3	1
DVARAI1	Analog Input Default Variation	1–6	4
ECLASSB1	Class for binary event data, 0 disables	0–3	1
ECLASSC1	Class for counter event data, 0 disables	0–3	0
ECLASSA1	Class for analog event data, 0 disables	0–3	2
DECPLA1	Decimal places scaling for Current data	0–3	1
DECPLV1	Decimal places scaling for Voltage data	0–3	1
DECPLM1	Decimal places scaling for Miscellaneous data	0–3	1
ANADBA1	Analog reporting dead band for current; hidden if ECLASSA1 set to 0	0–32767	100
ANADBV1	Analog reporting dead band for voltages; hidden if ECLASSA1 set to 0	0–32767	100
ANADBM1	Analog reporting dead band for miscellaneous analogs; hidden if ECLASSA and ECLASSC set to 0	0–32767	100
TIMERQ1	Time-set request interval, minutes (M = Disables time sync requests, but still accepts and applies time syncs from Master; I = Ignores (does not apply) time syncs from Master)	I, M, 1–32767	I

Table D.7 Port DNP3 Protocol Settings (Sheet 2 of 2)

Name	Description	Range	Default
STIMEO1	Select/operate time-out, seconds	0.0–30.0	1.0
DNPINA1[a]	Send Data Link Heartbeat, seconds; hidden if DNPTR1 set to UDP	0.0–7200	120
DRETRY1[b]	Data link retries	0–15	0
DTIMEO1[b]	Data link time-out, seconds; hidden if DRETRY1 set to 0	0.0–5.0	1
ETIMEO1	Event message confirm time-out, seconds	1–50	5
UNSOL1	Enable unsolicited reporting; hidden and set to N if ECLASSB1, ECLASSC1, and ECLASSA1 set to 0	Y, N	N
PUNSOL1	Enable unsolicited reporting at turn on; hidden and set to N if UNSOL1 set to N	Y, N	N
NUMEVE1[c]	Number of events to transmit on	1–200	10
AGEEVE1[c]	Oldest event to transmit on, seconds	0.0–99999.0	2.0
URETRY1[c]	Unsolicited messages maximum retry attempts	2–10	3
UTIMEO1[c]	Unsolicited messages offline time-out, seconds	1–5000	60
Session 2 Settings			
DNPIP2[a]	DNP Master IP address (zzz.yyy.xxx.www)	15 characters	“”
DNPTR2[a]	Transport protocol	UDP, TCP	TCP
• • •			
URETRY2[a,c]	Unsolicited messages maximum retry attempts	2–10	3
UTIMEO2[a,c]	Unsolicited messages offline time-out, seconds	1–5000	60
Session 3 Settings			
DNPIP3[a]	DNP Master IP address (zzz.yyy.xxx.www)	15 characters	“”
DNPTR3[a]	Transport protocol	UDP, TCP	TCP
• • •			
URETRY3[a,c]	Unsolicited messages maximum retry attempts	2–10	3
UTIMEO3[a,c]	Unsolicited messages offline time-out, seconds	1–5000	60
Serial Port Settings			
MINDLY[b]	Minimum delay from DCD to TX, seconds	0.00–1.00	0.05
MAXDLY[b]	Maximum delay from DCD to TX, seconds	0.00–1.00	0.10
PREDLY[b]	Settle time from RTS on to TX; Off disables PSTDLY	OFF, 0.00–30.00	0.00
PSTDLY[b]	Settle time from TX to RTS off; hidden if PREDLY set to Off	0.00–30.00	0.00

[a] Available only on Ethernet ports.
[b] Available only on serial ports.
[c] Hidden if UNSOLn set to N.

The modem settings in *Table D.8* are only available for DNP3 serial port sessions.

Table D.8 Serial Port DNP3 Modem Settings

Name	Description	Range	Default
MODEM	Modem connected to port; all following settings are hidden if MODEM set to N	Y, N	N
MSTR	Modem startup string	As many as 30 characters	"E0X0& D0S0 = 4"
PH_NUM1	Primary phone number for dial-out	As many as 30 characters	""
PH_NUM2	Secondary phone number for dial-out	As many as 30 characters	""
RETRY1	Retry attempts for primary dial-out; hidden and unused if PH_NUM2 set to ""	1–20	5
RETRY2	Retry attempts for secondary dial-out; hidden and unused if PH_NUM2 set to ""	1–20	5
MDTIME	Time from initiating call to failure due to no connection, seconds	5–300	60
MDRET	Time between dial-out attempts	5–3600	120

DNP3 Documentation

Object List

Table D.9 lists the objects and variations with supported function codes and qualifier codes available in the SEL-2664S. The list of supported objects conforms to the format laid out in the DNP specifications and includes both supported and unsupported objects for DNP3 implementation Level 2 and higher and non-supported objects for DNP3 implementation Level 2 only. Those that are supported include the function and qualifier codes. The objects that are not supported are shown without any corresponding function and qualifier codes.

Table D.9 SEL-2664S DNP Object List (Sheet 1 of 6)

Obj.	Var.	Description	Request[a]		Response[b]	
			Funct. Codes[c]	Qual. Codes[d]	Funct. Codes[c]	Qual. Codes[d]
0	211	Device Attributes—User-specific sets of attributes	1	0	129	0,17
0	212	Device Attributes—Master data set prototypes	1	0	129	0,17
0	213	Device Attributes—Outstation data set prototypes	1	0	129	0,17
0	214	Device Attributes—Master data sets	1	0	129	0,17
0	215	Device Attributes—Outstation data sets	1	0	129	0,17
0	216	Device Attributes—Max binary outputs a request	1	0	129	0,17
0	219	Device Attributes—Support for analog output events	1	0	129	0,17
0	220	Device Attributes—Max analog output index	1	0	129	0,17

Table D.9 SEL-2664S DNP Object List (Sheet 2 of 6)

Obj.	Var.	Description	Request[a]		Response[b]	
			Funct. Codes[c]	Qual. Codes[d]	Funct. Codes[c]	Qual. Codes[d]
0	221	Device Attributes—Number of analog outputs	1	0	129	0,17
0	222	Device Attributes—Support for binary output events	1	0	129	0,17
0	223	Device Attributes—Max binary output index	1	0	129	0,17
0	224	Device Attributes—Number of binary outputs	1	0	129	0,17
0	225	Device Attributes—Support for frozen counter events	1	0	129	0,17
0	226	Device Attributes—Support for frozen counters	1	0	129	0,17
0	227	Device Attributes—Support for counter events	1	0	129	0,17
0	228	Device Attributes—Max counter index	1	0	129	0,17
0	229	Device Attributes—Number of counters	1	0	129	0,17
0	230	Device Attributes—Support for frozen analog inputs	1	0	129	0,17
0	231	Device Attributes—Support for analog input events	1	0	129	0,17
0	232	Device Attributes—Max analog input index	1	0	129	0,17
0	233	Device Attributes—Number of analog inputs	1	0	129	0,17
0	234	Device Attributes—Support for double-bit events	1	0	129	0,17
0	235	Device Attributes—Max double-bit binary index	1	0	129	0,17
0	236	Device Attributes—Number of double-bit binaries	1	0	129	0,17
0	237	Device Attributes—Support for binary input events	1	0	129	0,17
0	238	Device Attributes—Max binary input index	1	0	129	0,17
0	239	Device Attributes—Number of binary inputs	1	0	129	0,17
0	240	Device Attributes—Max transmit fragment size	1	0	129	0,17
0	241	Device Attributes—Max receive fragment size	1	0	129	0,17
0	242	Device Attributes—Device manufacturer’s software version	1	0	129	0,17
0	243	Device Attributes—Device manufacturer’s hardware version	1	0	129	0,17
0	245	Device Attributes—User-assigned location name	1	0	129	0,17
0	246	Device Attributes—User assigned ID code/number	1	0	129	0,17
0	247	Device Attributes—User assigned ID code/number	1	0	129	0,17
0	248	Device Attributes—Device serial number	1	0	129	0,17
0	249	Device Attributes—DNP subset and conformance	1	0	129	0,17
0	250	Device Attributes—Device manufacturer’s product name and model	1	0	129	0,17
0	252	Device Attributes—Device manufacturer's name	1	0	129	0,17
0	254	Device Attributes—Non-specific all attributes request	1	0	129	0,17
0	255	Device Attributes—List of attribute variations	1	0	129	0,17
1	0	Binary Input—All Variations	1	0, 1, 6, 7, 8, 17, 28		
1	1	Binary Input	1	0, 1, 6, 7, 8, 17, 28	129	0, 1, 17, 28
1	2[e]	Binary Input With Status	1	0, 1, 6, 7, 8, 17, 28	129	0, 1, 17, 28

Table D.9 SEL-2664S DNP Object List (Sheet 3 of 6)

Obj.	Var.	Description	Request[a]		Response[b]	
			Funct. Codes[c]	Qual. Codes[d]	Funct. Codes[c]	Qual. Codes[d]
2	0	Binary Input Change—All Variations	1	6, 7, 8		
2	1	Binary Input Change Without Time	1	6, 7, 8	129	17, 28
2	2[e]	Binary Input Change With Time	1	6, 7, 8	129, 130	17, 28
2	3	Binary Input Change With Relative Time	1	6, 7, 8	129	17, 28
10	0	Binary Output—All Variations	1	0, 1, 6, 7, 8		
10	1	Binary Output				
10	2[e]	Binary Output Status	1	0, 1, 6, 7, 8	129	0, 1
12	0	Control Block—All Variations				
12	1	Control Relay Output Block	3, 4, 5, 6	17, 28	129	echo of request
12	2	Pattern Control Block	3, 4, 5, 6	7	129	echo of request
12	3	Pattern Mask	3, 4, 5, 6	0, 1	129	echo of request
20	0	Binary Counter—All Variations	1, 7, 8, 9, 10	0, 1, 6, 7, 8, 17, 28		
20	1	32-Bit Binary Counter	1, 7, 8, 9, 10	0, 1, 6, 7, 8, 17, 28	129	0, 1, 17, 28
20	2	16-Bit Binary Counter	1, 7, 8, 9, 10	0, 1, 6, 7, 8, 17, 28	129	0, 1, 17, 28
20	3	32-Bit Delta Counter				
20	4	16-Bit Delta Counter				
20	5	32-Bit Binary Counter Without Flag	1, 7, 8, 9, 10	0, 1, 6, 7, 8, 17, 28	129	0, 1, 17, 28
20	6[e]	16-Bit Binary Counter Without Flag	1, 7, 8, 9, 10	0, 1, 6, 7, 8, 17, 28	129	0, 1, 17, 28
20	7	32-Bit Delta Counter Without Flag				
20	8	16-Bit Delta Counter Without Flag				
21	0	Frozen Counter—All Variations				
21	1	32-Bit Frozen Counter				
21	2	16-Bit Frozen Counter				
21	3	32-Bit Frozen Delta Counter				
21	4	16-Bit Frozen Delta Counter				
21	5	32-Bit Frozen Counter With Time of Freeze				
21	6	16-Bit Frozen Counter With Time of Freeze				
21	7	32-Bit Frozen Delta Counter With Time of Freeze				
21	8	16-Bit Frozen Delta Counter With Time of Freeze				
21	9	32-Bit Frozen Counter Without Flag				
21	10	16-Bit Frozen Counter Without Flag				
21	11	32-Bit Frozen Delta Counter Without Flag				
21	12	16-Bit Frozen Delta Counter Without Flag				
22	0	Counter Change Event—All Variations	1	6, 7, 8		
22	1	32-Bit Counter Change Event Without Time	1	6, 7, 8	129	17, 28
22	2[e]	16-Bit Counter Change Event Without Time	1	6, 7, 8	129, 130	17, 28
22	3	32-Bit Delta Counter Change Event Without Time				

Table D.9 SEL-2664S DNP Object List (Sheet 4 of 6)

Obj.	Var.	Description	Request[a]		Response[b]	
			Funct. Codes[c]	Qual. Codes[d]	Funct. Codes[c]	Qual. Codes[d]
22	4	16-Bit Delta Counter Change Event Without Time				
22	5	32-Bit Counter Change Event With Time	1	6, 7, 8	129	17, 28
22	6	16-Bit Counter Change Event With Time	1	6, 7, 8	129	17, 28
22	7	32-Bit Delta Counter Change Event With Time				
22	8	16-Bit Delta Counter Change Event With Time				
23	0	Frozen Counter Event—All Variations				
23	1	32-Bit Frozen Counter Event Without Time				
23	2	16-Bit Frozen Counter Event Without Time				
23	3	32-Bit Frozen Delta Counter Event Without Time				
23	4	16-Bit Frozen Delta Counter Event Without Time				
23	5	32-Bit Frozen Counter Event With Time				
23	6	16-Bit Frozen Counter Event With Time				
23	7	32-Bit Delta Counter Change Event With Time				
23	8	16-Bit Delta Counter Change Event With Time				
30[f]	0	Analog Input—All Variations	1	0, 1, 6, 7, 8, 17, 28		
30[f]	1	32-Bit Analog Input	1	0, 1, 6, 7, 8, 17, 28	129	0, 1, 17, 28
30[f]	2	16-Bit Analog Input	1	0, 1, 6, 7, 8, 17, 28	129	0, 1, 17, 28
30[f]	3	32-Bit Analog Input Without Flag	1	0, 1, 6, 7, 8, 17, 28	129	0, 1, 17, 28
30[f]	4	16-Bit Analog Input Without Flag	1	0, 1, 6, 7, 8, 17, 28	129	0, 1, 17, 28
30[f]	5	Short Floating Point Analog Input	1	0, 1, 6, 7, 8, 17, 28	129	0, 1, 17, 28
30	6	Long Floating Point Analog Input	1	0, 1, 6, 7, 8, 17, 28	129	0, 1, 17, 28
31	0	Frozen Analog Input—All Variations				
31	1	32-Bit Frozen Analog Input				
31	2	16-Bit Frozen Analog Input				
31	3	32-Bit Frozen Analog Input With Time of Freeze				
31	4	16-Bit Frozen Analog Input With Time of Freeze				
31	5	32-Bit Frozen Analog Input Without Flag				
31	6	16-Bit Frozen Analog Input Without Flag				
31	7	Short Floating Point Frozen Analog Input				
31	8	Long Floating Point Frozen Analog Input				
32	0	Analog Change Event—All Variations	1	6, 7, 8		
32[f]	1	32-Bit Analog Change Event Without Time	1	6, 7, 8	129	17, 28
32[f]	2	16-Bit Analog Change Event Without Time	1	6, 7, 8	129, 130	17, 28
32[f]	3	32-Bit Analog Change Event With Time	1	6, 7, 8	129	17, 28
32[f]	4	16-Bit Analog Change Event With Time	1	6, 7, 8	129	17, 28
32[f]	5	Short Floating Point Analog Change Event	1	6, 7, 8	129	17, 28
32[f]	6	Long Floating Point Analog Change Event	1	6, 7, 8	129	17, 28

Table D.9 SEL-2664S DNP Object List (Sheet 5 of 6)

Obj.	Var.	Description	Request[a]		Response[b]	
			Funct. Codes[c]	Qual. Codes[d]	Funct. Codes[c]	Qual. Codes[d]
32[f]	7	Short Floating Point Analog Change Event With Time	1	6, 7, 8	129	17, 28
32[f]	8	Long Floating Point Analog Change Event With Time	1	6, 7, 8	129	17, 28
33	0	Frozen Analog Event—All Variations				
33	1	32-Bit Frozen Analog Event Without Time				
33	2	16-Bit Frozen Analog Event Without Time				
33	3	32-Bit Frozen Analog Event With Time				
33	4	16-Bit Frozen Analog Event With Time				
33	5	Short Floating Point Frozen Analog Event				
33	6	Long Floating Point Frozen Analog Event				
33	7	Short Floating Point Frozen Analog Event With Time				
33	8	Long Floating Point Frozen Analog Event With Time				
34	0	Analog Dead Band—All Variations				
34	1[e]	16-Bit Analog Input Reporting Dead-band Object	1, 2	0, 1, 6, 7, 8, 17, 28	129	0, 1, 17, 28
34	2	32-Bit Analog Input Reporting Dead-band Object	1, 2	0, 1, 6, 7, 8, 17, 28	129	0, 1, 17, 28
34	3	Floating Point Analog Input Reporting Dead-band Object	1, 2	0, 1, 6, 7, 8, 17, 28	129	0, 1, 17, 28
40	0	Analog Output Status—All Variations	1	0, 1, 6, 7, 8	129	
40	1	32-Bit Analog Output Status	1	0, 1, 6, 7, 8	129	0, 1, 17, 28
40	2[e]	16-Bit Analog Output Status	1	0, 1, 6, 7, 8	129	0, 1, 17, 28
40	3	Short Floating Point Analog Output Status	1	0, 1, 6, 7, 8	129	0, 1, 17, 28
40	4	Long Floating Point Analog Output Status	1	0, 1, 6, 7, 8	129	0, 1, 17, 28
41	0	Analog Output Block—All Variations				
41	1	32-Bit Analog Output Block	3, 4, 5, 6	17, 28	129	echo of request
41	2[e]	16-Bit Analog Output Block	3, 4, 5, 6	17, 28	129	echo of request
41	3	Short Floating Point Analog Output Block	3, 4, 5, 6	17, 28	129	echo of request
50	0	Time and Date—All Variations				
50	1	Time and Date	1, 2	7, 8 index=0	129	07, quantity=1
50	2	Time and Date With Interval				
50	3	Time and Date Last Recorded	2	7 quantity=1	129	
51	0	Time and Date CTO—All Variations				
51	1	Time and Date CTO				
51	2	Unsynchronized Time and Date CTO			129	07, quantity=1
52	0	Time Delay—All Variations				
52	1	Time Delay, Coarse				
52	2	Time Delay, Fine			129	7, quantity=1
60	0	All Classes of Data	1, 20, 21	6, 7, 8		
60	1	Class 0 Data	1, 20, 21	6, 7, 8		
60	2	Class 1 Data	1	6, 7, 8		

Table D.9 SEL-2664S DNP Object List (Sheet 6 of 6)

Obj.	Var.	Description	Request[a]		Response[b]	
			Funct. Codes[c]	Qual. Codes[d]	Funct. Codes[c]	Qual. Codes[d]
60	3	Class 2 Data	1, 20, 21	6, 7, 8		
60	4	Class 3 Data	1, 20, 21	6, 7, 8		
70	1	File Identifier				
70	2	Authentication Object				
70	3	File Command Object				
70	4	File Command Status Object				
70	5	File Transport Object				
70	6	File Transport Status Object				
70	7	File Descriptor Object				
80	1	Internal Indications	2	0, 1 index=7		
81	1	Storage Object				
82	1	Device Profile				
83	1	Private Registration Object				
83	2	Private Registration Object Descriptor				
90	1	Application Identifier				
100	1	Short Floating Point				
100	2	Long Floating Point				
100	3	Extended Floating Point				
101	1	Small Packed Binary-Coded Decimal				
101	2	Medium Packed Binary-Coded Decimal				
101	3	Large Packed Binary-Coded Decimal				
110	all	Octet String				
111	all	Octet String Event				
112	All	Virtual Terminal Output Block				
113	All	Virtual Terminal Event Data				
N/A		No object required for the following function codes: 13 cold start 14 warm start 23 delay measurement	13, 14, 23			

[a] Supported in requests from master.
[b] Can generate in response to master.
[c] Decimal.
[d] Hexadecimal.
[e] Default variation.
[f] Default variation specified by serial port setting DVARAI (or DVARAIn for Ethernet session n [n = 1, 2, or 3]).

Device Profile

The DNP3 Device Profile document, available on the SEL website, contains the standard device profile information for the SEL-2664S. This information is also available in XML format. Refer to this document for complete information on DNP3 Protocol support in the SEL-2664S.

Reference Data Map

Table D.10 shows the SEL-2664S reference data map. The reference map shows the data available to a DNP3 master. You can use the default map or the custom DNP3 mapping functions of the SEL-2664S to retrieve only the points required by your application.

NOTE: Dead-band changes via Object 34 are not stored in nonvolatile memory. Make sure to reissue the Object 34 dead bands after a warm (**STA C**) or cold start (power cycle).

The SEL-2664S scales analog values by the indicated settings or fixed scaling indicated in the description. Analog dead bands for event reporting use the indicated settings, or ANADBM if you have not specified a setting.

NOTE: Although the reference maps do not include Relay Word bit labels, you can use these labels in creating custom maps.

Table D.10 DNP3 Reference Data Map

Object	Labels	Description
Binary Inputs		
01, 02	STFAIL	Relay Diagnostic Failure
	STWARN	Relay Diagnostic Warning
	STSET	Relay Settings Change Or Restart
	Enabled–INJ_LED	Relay Word Elements Target Row 0 (see *Table H.1*)
	E64S-ROKA	Relay Word Elements (see *Table H.1*)
	0	Logical 0
	1	Logical 1
Binary Outputs		
10, 12	RB01–RB08	Remote bits RB01–RB08
	RB01:RB02 RB03:RB04 RB05:RB06 RB07:RB08	Remote bit pairs RB01–RB08
Counters		
20, 22	SC*xx*	SELOGIC Counter Values (*xx* = 01–08)
Analog Inputs		
30, 32, 34	INS_RES–SC08 [a]	Analog Quantities from *Appendix I* with an "x" in the DNP column
	SER_NUM	Serial Number
	0	Numeric 0
	1	Numeric 1
Analog Outputs		
40, 41	NOOP	No operation, no error

[a] Refer to *Analog Inputs* for default analog input scaling and dead bands.

Default Data Map

The default data map is an automatically generated subset of the reference map. All data maps are initialized to the default values, based on the SEL-2664S part number. *Table D.11* shows the SEL-2664S default data map. If the default maps are not appropriate, you can also use the custom DNP mapping commands **SET DNP** and **SHOW DNP** to create the map required for your application.

Table D.11 DNP3 Default Data Map

Object	Default Index	Point Label
01, 02	0	ENABLED
	1	TRIP
	2	STWARN
	3	STFAIL
	4	STSET
	5	IN01
	6	IN02
	7	NA
10, 12	0–7	RB01–RB08 Remote Bits
20, 22	0–31	NA
30, 32, 34	0	INS_RES
	1	INS_CAP
	2	VN1_MAG
	3	VN3_MAG
	4	VN_RMS
	5	I_SRC
	6	VNF1_MAG
	7	INS_RES1
	8	VNF2_MAG
	9	INS_RES2
	10	VNF3_MAG
	11	INS_RES3
	12	VNF4_MAG
	13	NS_RES4
	14–99	NA
40, 41	0–31	NA

Device Attributes (Object 0)

Table D.10 includes the supported Object 0 Device Attributes and variations. In response to Object 0 requests, the SEL-2664S will send attributes that apply to that particular DNP3 session. Because the SEL-2664S supports custom DNP3 maps, these values will likely be different for each session. The SEL-2664S uses its internal settings for the following variations:

- Variation 242—FID string
- Variation 243—Part Number
- Variation 245—TID setting
- Variation 246—RID setting
- Variation 247—RID setting
- Variation 248—Serial Number

Variation 249 shall contain the DNP subset and conformance, “2:2009”. Variation 250 shall contain the product model, “SEL-2664S” and variation 252 shall contain “SEL”.

Binary Inputs

Binary Inputs (objects 1 & 2) are supported as defined by *Table D.11*. The default variation for both static and event inputs is 2. Only the Read function code (1) is allowed with these objects. All variations are supported. Object 2, variation 3 will be responded to, but will contain no data.

Binary Inputs are scanned approximately once a second to generate events. When time is reported with these event objects, it is the time at which the scanner observed the bit change. This can be significantly delayed from when the original source changed and should not be used for sequence-of-events determination. Binary inputs registered with SER are derived from the SER and carry the time stamp of actual occurrence. Some additional binary inputs are available only to DNP. For example, STWARN and STFAIL are derived from the diagnostic task data. Another binary input, STSET, is derived from the SER and carries the time stamp of actual occurrence. Static reads of this input will always show 0.

Binary Outputs

Binary Output status (Object 10 variation 2) is supported. Static reads of points RB1–RB08 respond with the on-line bit set and the state of the requested bit. Reads from control-only binary output points respond with the online bit set and a state of 0. The SEL-2664S supports Control Relay Output Block objects (Object 12,Variation 1). The control relays correspond to the remote bits and other functions as shown previously. Each DNP Control message contains a Trip/Close code (TRIP, CLOSE, or NUL) and an Operation type (PULSE ON, LATCH ON, LATCH OFF, or NUL). The Trip/Close code works with the Operation Type to produce set, clear, and pulse operations.

Control operations differ slightly for single-point controls compared to paired outputs. Paired outputs correspond to the complementary two-output model, and single-point controls follow the complementary latch or activation model. In the complementary two-output model, paired points only support Trip or Close operations, which, when issued, will Pulse On the first or second point in the pair, respectively. An operation in progress can be cancelled by issuing a NUL Trip/Close Code with a NUL Operation Type. Single output points support both Pulse and Latch operations. See *Analog Inputs* for details on control operations.

The Status field is used exactly as defined. All other fields are ignored. A pulse operation is asserted for a single processing interval. Exercise caution when sending multiple remote bit pulses in a single message (i.e., point count > 1) to avoid pulse commands being ignored and the return of an already active status message. The SEL-2664S only honors the first ten points in an Object 12, Variation 1 request. Any additional points in the request return the DNP3 status code TOO_MANY_OBJS.

The SEL-2664S also supports Pattern Control Blocks (Object 12, Variations 2 and 3) to control multiple binary output points. Variation 2 defines the control type (Trip/Close, Set/Clear, or Pulse) and the range of points to operate. Variation 3 provides a pattern mask that indicates which points in that range should be operated. Object 12, Variations 2 and 3 define the entire control command: the DNP3 master must send both for a successful control. For example, the DNP3 master sends an Object 12, Variation 2 message to request a Trip of the range of indices 0–7. The DNP3 master then sends an Object 12, Variation 3

message with a hexadecimal value of “BB” as the pattern mask (converted to binary notation: 10111011). Read right to left in increasing bit order, the Pattern Block Control command will result in a TRIP of indexes 0, 1, 3 to 5, and 7. Multiple binary output point control operations are not guaranteed to occur during the same processing interval.

Control Point Operation

Use the Trip and Close, Latch On/Off and Pulse On operations with Object 12 control relay output block command messages to operate the points shown in *Table D.12*. Pulse operations provide a pulse with duration of one protection processing interval.

Table D.12 SEL-2664S Object 12 Control Operations

Label	Close/Pulse On	Trip/Pulse On	Nul/Latch On	Nul/Latch Off	Nul/Pulse On
RB01–RB08	Pulse Remote Bit RB01–RB08	Pulse Remote Bit RB01–RB08	Set Remote Bit RB01–RB08	Clear Remote Bit RB01–RB08	Pulse Remote Bit RB01–RB08
RB*xx*:RB*yy*	Pulse RB*yy* RB01–RB08	Pulse RB*xx* RB01–RB08	Pulse RB*yy* RB01–RB08	Pulse RB*xx* RB01–RB08	Pulse RB*yy* RB01–RB08

Configurable Data Mapping

One of the most powerful features of the SEL-2664S implementation is the ability to remap DNP3 data and, for analog values, specify per-point scaling and dead bands. Remapping is the process of selecting data from the reference map and organizing it into a data subset optimized for your application. The SEL-2664S uses object and point labels, rather than point indices, to streamline the remapping process. This enables you to quickly create a custom map without having to search for each point index in a large reference map.

You can use any of the three available DNP3 maps simultaneously with as many as three unique DNP3 masters. Each map is initially populated with default data points, as described in *Default Data Map* on page D.20. You can remap the points in a default map to create a custom map with as many as:

- 100 Binary Inputs
- 32 Binary Outputs
- 100 Analog Inputs
- 32 Analog Outputs
- 32 Counters

You can use the **SHOW DNP *x* <Enter>** command to view the DNP3 data map settings, where ***x*** is the DNP3 map number from 1 to 3. See *Figure D.3* for an example display of map 1.

```
=>>SHO DNP 1 <Enter>

DNP Map 1 Settings

Binary Input Map
BI_00    := ENABLED
BI_01    := 64S1T
BI_02    := 64S2T
BI_03    := 59N1T
…
BI_97    := IN01
BI_98    := IN02
BI_99    := 64F1T

Binary Output Map
BO_00    := RB01
BO_01    := RB02
BO_02    := RB03
…
BO_05    := RB06
BO_06    := RB07
BO_07    := RB08
BO_31    := NA


Analog Input Map
AI_00    := INS_RES
AI_01    := INS_CAP
AI_02    := MES_NGR
…
AI_95    := INS_RES2
AI_96    := FLDRES
AI_97    := VNF3_MAG
AI_98    := VN_RMS
AI_99    := VNF4_MAG

Analog Output Map
AO_00    := NA
AO_31    := NA

Counter Map
CO_00    := SC01
CO_01    := SC02
CO_02    := SC03
…
CO_05    := SC06
CO_06    := SC07
CO_07    := SC08
CO_31    := NA

=>>
```

Figure D.3 Sample Response to SHO DNP Command

You can also use the **MAP DNP *y s*** command to display DNP3 maps, but the parameter ***y*** is the port number from 1 to 3. Because Port 1, the Ethernet port, can support multiple DNP3 sessions, it can have a different map assigned to each session selected by parameter *s* for sessions 1 to 3. See *Figure D.4* for an example of a **MAP** command that shows the same map as in *Figure D.3*.

```
=>MAP DNP 1 1 <Enter>

SEL-2664S                                Date: 05/02/2013   Time: 14:43:54.161
STATOR GND RELAY                         Time Source: External

Map                          1
Transport                    TCP
Device IP Address            10.10.52.243
Master IP Address            192.168.1.3
Device DNP TCP and UDP Port  20000
Device DNP Address           0
Master DNP Address           1

Binary Inputs
-------------------------------------------------------------------------------
  INDEX  POINT LABEL  EVENT CLASS  SER TIMESTAMP
  0      ENABLED      1
  1      TRIP_LED     1
  2      IN01         1
  3      IN02         1
  4      OUT01        1
  5      OUT02        1
  6      OUT03        1
  7      OUT04        1
  8      STFAIL       1
  9      STSET        1

Binary Outputs
-------------------------------------------------------------------------------
  INDEX  POINT LABEL
  0      RB01
  1      RB02
  2      RB03
  3      RB04
  4      RB05
  5      RB06
  6      RB07
  7      RB08


Counters
-------------------------------------------------------------------------------
Analog Inputs
-------------------------------------------------------------------------------
  INDEX  POINT LABEL  EVENT CLASS  SCALE FACTOR  DEADBAND
  0      INS_RES      2                 10.0000  100
  1      FLDRES       2                 10.0000  100
  2      VN1_MAG      2                 10.0000  100
  3      VN_RMS       2                 10.0000  100
  4      I_SRC        2                 10.0000  100
  5      IN_RMS       2                 10.0000  100
  6      INS_RES1     2                 10.0000  100
-------------------------------------------------------------------------------
Analog Outputs
-------------------------------------------------------------------------------

==>>
```

Figure D.4 Port MAP Command

You can use the command **SET DNP *x***, where ***x*** is the map number, to edit or create custom DNP3 data maps. You can also use ACSELERATOR QuickSet® SEL-5030 Software, which is recommended for this purpose.

Scaling factors allow you to overcome the limitations imposed by the integer nature of the default variations of Objects 30 and 32. For example, the device rounds a value of 11.4 amperes to 11 amperes. You can use scaling to include decimal point values by multiplying by a number larger than one. If you use 10 as a scaling factor, 11.4 amperes will be transmitted as 114. You must divide the value by 10 in the master to see the original value including one decimal place.

You can also use scaling to avoid overflowing the 16-bit maximum integer value of 32767. For example, if you have a value that can reach 157834, you cannot send it using DNP3 16-bit analog object variations. You could use a scaling factor of 0.1 so that the maximum value reported is 15783. You can then multiply the value by 10 in the master to see a value of 157830. You will lose some precision as the last digit is rounded off in the scaling process, but you can transmit the scaled value using standard DNP3 Objects 30 and 32.

You can customize the DNP3 analog input map with per-point scaling, and dead-band settings. Per-point customization is not required, but class scaling (DECPLA, DECPLV, and DECPLM) and dead-band (ANADBA, ANADBV, and ANADBM) settings are applied to indices that do not have per-point entries. Unlike per-point scaling previously described, class-level scaling is specified by an integer in the range 0–3 (inclusive), which indicates the number of decimal place shifts. In other words, you should select 0 to multiply by 1, 1 for 10, 2 for 100, or 3 for 1000.

The following example describes how to create a custom DNP3 map by point type. The example demonstrates the SEL ASCII command **SET DNP** for each point type, but the entire configuration can be completed without saving changes between point types. To do this, you simply continue entering data and save the entire map at the end. Alternately, you can use QuickSet to simplify custom data map creation. Consider a case where you want to set the AI points in a map, as shown in *Table D.13*.

Table D.13 Sample Custom DNP3 AI Map

Required Point Index	Description	Label	Scaling	Dead Band
0	Stator Insulation Resistance	INS_RES	default	default
1	Fundamental Neutral Voltage	VN1_MAG	.01	1
2	Third-Harmonic Neutral Voltage	VN3_MAG	1	15
3	Field Insulation Resistance	FLDRES	default	default
4	Stator Insulation Capacitance	INS_CAP	5	default
5	Neutral RMS Current	IN_RMS	default	default

To set these points as part of custom map 1, you can use the command **SET DNP 1 AI_00 TERSE <Enter>** as shown in *Figure D.5*.

```
=>>SET DNP 1 AI_00 TERSE <Enter>

DNP Map 1 Settings

Analog Input Map

DNP Analog Input Label Name (24 characters)
AI_00   := NA
? INS_RES <Enter>
DNP Analog Input Label Name (24 characters)
AI_01   := NA
? VN1_MAG:.01:1 <Enter>
DNP Analog Input Label Name (24 characters)
AI_02   := NA
? VN3_MAG:1:15 <Enter>
DNP Analog Input Label Name (24 characters)
AI_03   := NA
? FLDRES <Enter>
DNP Analog Input Label Name (24 characters)
AI_04   := NA
? INS_CAP:5 <Enter>
DNP Analog Input Label Name (24 characters)
AI_05   := NA
? IN_RMS <Enter>
DNP Analog Input Label Name (24 characters)
AI_06   := NA
? END <Enter>
Save changes (Y,N)? Y <Enter>
Settings Saved

=>>
```

Figure D.5 Sample Custom DNP3 AI Map Settings

You can also use QuickSet to enter the *Figure D.5* AI map settings, as shown in the screen capture in *Figure D.6*. You can enter scaling and dead-band settings in the same pop-up dialog used to select the AI point, as shown in *Figure D.7*.

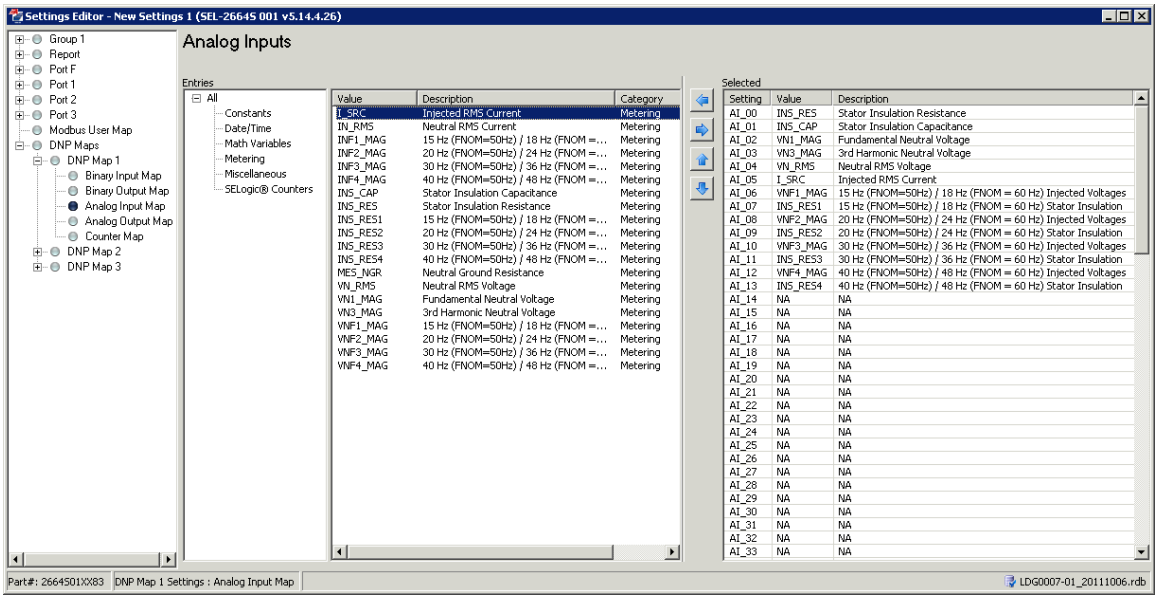

Figure D.6 Analog Input Map Entry in QuickSet Software

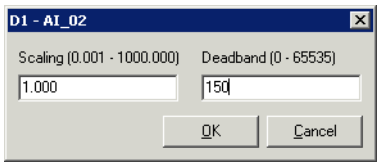

Figure D.7 AI Point Label, Scaling and Dead Band in QuickSet Software

The **SET DNP *x* CO_00 <Enter>** command allows you to populate the DNP counter map with per-point dead bands. Entering these settings is similar to defining the analog input map settings.

You can use the command **SET DNP *x* BO_00 TERSE <Enter>** to change the binary output map ***x*** as shown in *Figure D.8*. You can populate the custom BO map with any of the eight remote bits (RB01–RB08). You can define bit pairs in BO maps by including a colon (:) between the bit labels.

```
=>>SET DNP 1 BO_00 TERSE <Enter>
Binary Output Map

DNP Binary Output Label Name (23 characters)
BO_00   := NA
? > RB01 <Enter>

DNP Binary Output Label Name (23 characters)
BO_01   := NA
? > RB02 <Enter>

DNP Binary Output Label Name (23 characters)
BO_02   := NA
? > RB03:RB04 <Enter>

DNP Binary Output Label Name (23 characters)
BO_03   := NA
? > RB05:RB06 <Enter>

DNP Binary Output Label Name (23 characters)
BO_04   := NA
? > end <Enter>

=>>
```

Figure D.8 Sample Custom DNP3 BO Map Settings

You can also use QuickSet to enter the BO map settings as shown in the screen capture in *Figure D.9*. The binary input (BI) maps are modified in a similar manner, but pairs are not allowed.

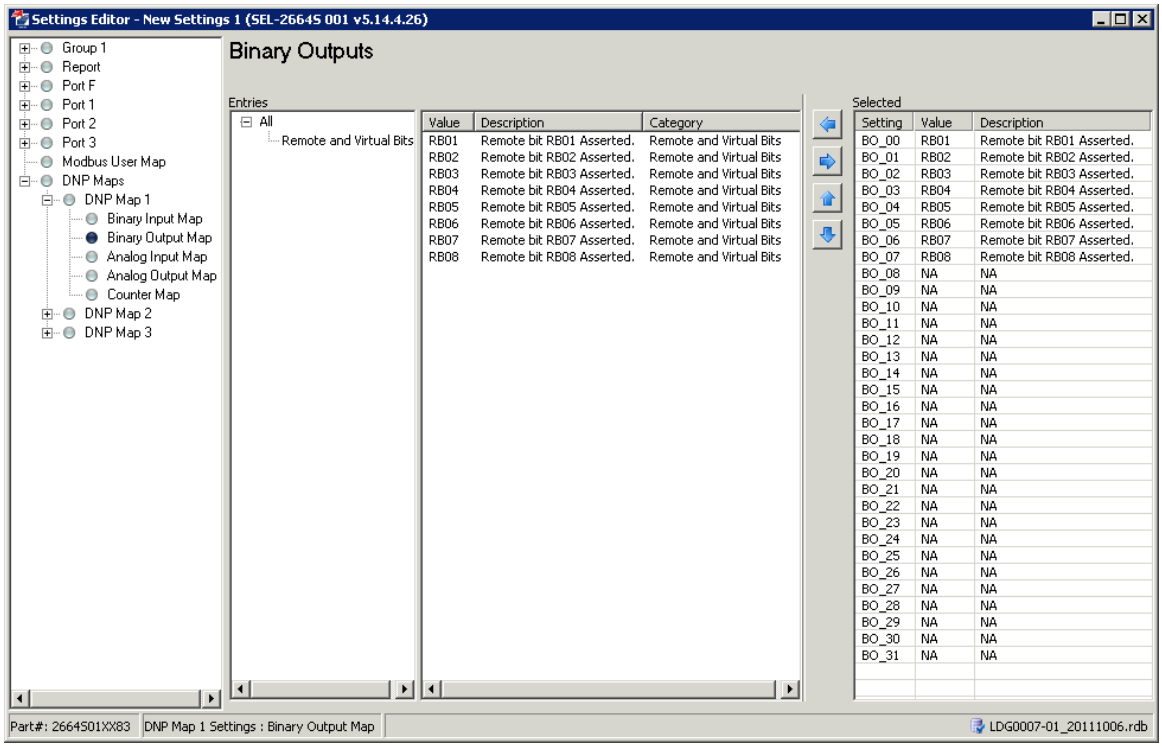

Figure D.9 Binary Output Map Entry in QuickSet Software

Analog Inputs

Analog Inputs (30) and Analog Change Events (32) are supported as defined in Table D.11. The default variation for both static and event inputs is defined by the DVARAI1 (DVARAIn for DNP3 LAN/WAN session n) setting. Only the Read function code (1) is allowed with these objects.

NOTE: Dead-band changes via Object 34 are not stored in nonvolatile memory. Be sure to reissue the Object 34 dead-band changes you want to retain after changing DNP port settings, issuing a **STA C** command, or cold-starting the relay (power-cycle).

Unless otherwise indicated, analog values are reported in primary units. See *Appendix I: Analog Quantities* for a list of all available analog inputs.

For all currents, the default scaling is the DECPLA setting on magnitudes and scale factor of 100 on angles. The default dead band for currents is ANADBV on magnitudes and ANADBM on angles. For all voltages, the default scaling is the DECPLV setting on magnitudes and scale factor of 100 on angles. The default dead band for voltages is ANADBV on magnitudes and ANADBM on angles. For all powers and energies, the default scaling is the DECPLM setting and default dead band is ANADBM. For all other quantities, the default scaling is 1 and default dead band is ANADBM.

Default scaling and dead bands can be overridden by per-point scaling and dead band. See *Control Point Operation* on page D.22 for more information. Dead bands for analog inputs can also be modified by writing to object 34.

A dead-band check is done after any scaling has been applied. Event class messages are generated whenever an input changes beyond the value given by the appropriate dead-band setting. The voltage and current phase angles will only generate an event if, in addition to their dead-band check, the corresponding magnitude changes beyond its own dead band. Analog inputs are scanned at approximately a one-second rate. All events generated during a scan will use the time the scan was initiated.

APPENDIX E

Modbus Communications

Overview

This appendix describes Modbus® RTU and TCP communications features supported by the SEL-2664S. Complete specifications for the Modbus protocol are available from the Modbus user's group website at www.modbus.org.

Modbus TCP is automatically available with the optional Ethernet port. Modbus TCP uses the device IP address as the Modbus identifier and accesses the data in the relay using the same function codes and data maps as Modbus RTU. The TCP Port for Modbus TCP is 502.

Enable Modbus RTU protocol with the serial port settings. When Modbus RTU protocol is enabled, the relay switches the port to Modbus RTU protocol and deactivates the ASCII protocol.

Modbus RTU is a binary protocol that permits communication between a single master device and multiple slave devices. The communication is half duplex—only one device transmits at a time. The master transmits a binary command that includes the address of the required slave device. All of the slave devices receive the message, but only the slave device with the matching address responds.

The SEL-2664S Modbus communication allows a Modbus master device to do the following:

- Acquire metering, monitoring, and event data from the relay.
- Control SEL-2664S output contacts.
- Read the SEL-2664S self-test status and learn the present condition of all the relay protection elements.

Communications Protocol

Modbus Queries

Modbus RTU master devices initiate all exchanges by sending a query. The query consists of the fields shown in *Table E.1*.

Table E.1 Modbus Query Fields

Field	Number of Bytes
Slave Device Address	1 byte
Function Code	1 byte
Data Region	0–251 bytes
Cyclical Redundancy Check (CRC)	2 bytes

The SEL-2664S SLAVEID setting defines the device address. Set this value to a unique number for each device on the Modbus network. For Modbus communication to operate properly, no two slave devices can have the same address.

The cyclical redundancy check detects errors in the received data. If an error is detected, the relay discards the packet.

Modbus Responses

The slave device sends a response message after it performs the action the query specifies. If the slave cannot execute the query command for any reason, it sends an error response. Otherwise, the slave device response is formatted similarly to the query and includes the slave address, function code, data (if applicable), and a cyclical redundancy check value.

Supported Modbus Function Codes

The SEL-2664S supports the Modbus function codes shown in *Table E.2*.

Table E.2 SEL-2664S Modbus Function Codes

Codes	Description
01h	Read Discrete Output Coil Status
02h	Read Discrete Input Status
03h	Read Holding Registers
04h	Read Input Registers
05h	Force Single Coil
06h	Preset Single Register
08h	Diagnostic Command
10h	Preset Multiple Registers
60h	Read Parameter Information
61h	Read Parameter Text
62h	Read Enumeration Text
7Dh	Encapsulate Modbus Packet With Control
7Eh	NOP (can only be used with the 7Dh function)

Modbus Exception Responses

The SEL-2664S sends an exception code under the conditions described in *Table E.3*.

Table E.3 SEL-2664S Modbus Exception Codes

Exception Code	Error Type	Description
1	Illegal Function Code	The received function code is either undefined or unsupported.
2	Illegal Data Address	The received command contains an unsupported address in the data field (i.e., cannot write to a read-only register, cannot write as settings are locked, etc.).
3	Illegal Data Value	The received command contains a value that is out of range.
4	Device Error	The SEL-2664S is in the wrong state for the function a query specifies. This also stands for Service Failure for DeviceNet interface applications. The relay is unable to perform the action specified by a query (i.e., cannot write to a read-only register, cannot write as settings are locked, etc.).
6	Busy	The device is unable to process the command at this time because of a busy resource.

In the event that any of the errors listed in *Table E.3* occur, the relay assembles a response message that includes the exception code in the data field. The relay sets the most significant bit in the function code field to indicate to the master that the data field contains an error code, instead of the required data.

Cyclical Redundancy Check

The SEL-2664S calculates a 2-byte CRC value through use of the device address, function code, and data region. It appends this value to the end of every Modbus response. When the master device receives the response, it recalculates the CRC. If the calculated CRC matches the CRC sent by the SEL-2664S, the master device uses the data received. If there is no match, the check fails and the message is ignored. The devices use a similar process when the master sends queries.

01h Read Discrete Output Coil Status Command

Use function code 01h to read the On/Off status of the selected bits (coils) (see the Modbus Register Map shown in *Table E.34*). You can read the status of as many as 2000 bits a query, using the fields shown in *Table E.4*. Note that the SEL-2664S coil addresses start at 0 (e.g., Coil 1 is located at address zero). The coil status is packed one coil a bit of the data field. The least significant bit (LSB) of the first data byte contains the starting coil address in the query. The other coils follow towards the high order end of this byte and from low order to high order in subsequent bytes.

Table E.4 01h Read Discrete Output Coil Status Command

Bytes	Field
Requests from the master must have the following format:	
1 byte	Slave Address
1 byte	Function Code (01h)
2 bytes	Address of the first bit
2 bytes	Number of bits to read
2 bytes	CRC-16
A successful response from the slave will have the following format:	
1 byte	Slave Address
1 byte	Function Code (01h)
1 byte	Bytes of data (*n*)
n bytes	Data
2 bytes	CRC-16

To build the response, the SEL-2664S calculates the number of bytes required to contain the number of bits requested. If the number of bits requested is not evenly divisible by eight, the device adds one more byte to maintain the balance of bits, padded by zeroes to make an even byte. *Table E.14* includes the coil number and lists all possible coils (identified as Outputs and Remote bits) available in the device. Note that the command depends on the device hardware configuration; the device responds only to installed cards.

The relay responses to errors in the query are shown in *Table E.5*.

Table E.5 Responses to 01h Read Discrete Output Coil Query Errors

Error	Error Code Returned	Communications Counter Increments
Invalid bit to read	Illegal Data Address (02h)	Invalid Address
Invalid number of bits to read	Illegal Data Value (03h)	Illegal Register
Format error	Illegal Data Value (03h)	Bad Packet Format

02h Read Input Status Command

Use function code 02h to read the On/Off status of the selected bits (inputs), as shown in *Table E.6*. You can read the status of as many as 2000 bits a query. Note that input addresses start at 0 (e.g., Input 1 is located at address zero). The input status is packed one input a bit of the data field. The LSB of the first data byte contains the starting input address in the query. The other inputs follow towards the high order end of this byte, and from low order to high order in subsequent bytes.

Table E.6 02h Read Input Status Command

Bytes	Field
Requests from the master must have the following format:	
1 byte	Slave Address
1 byte	Function Code (02h)
2 bytes	Address of the first bit
2 bytes	Number of bits to read
2 bytes	CRC-16
A successful response from the slave will have the following format:	
1 byte	Slave Address
1 byte	Function Code (02h)
1 byte	Bytes of data (*n*)
n bytes	Data
2 bytes	CRC-16

To build the response, the device calculates the number of bytes required to contain the number of bits requested. If the number of bits requested is not evenly divisible by eight, the device adds one more byte to maintain the balance of bits, padded by zeroes to make an even byte.

In each row, the input numbers are assigned from the right-most input to the left-most input (i.e., Input 1 is TLED_06 and Input 8 is ENABLED). Input addresses start at 0000 (i.e., Input 1 is located at Input Address 0000). *Table E.7* includes the coil address in decimal and lists all possible inputs (Relay Word bits) available in the device. Note that the command depends on the device hardware configuration; the device responds only to installed cards.

Table E.7 02h SEL-2664S Inputs (Sheet 1 of 2)

Coil Address (Decimal)	Function Code Supported	Coil Description[a]
0–7	2	Relay Element Status Row 0
8–15	2	Relay Element Status Row 1
16–23	2	Relay Element Status Row 2
24–31	2	Relay Element Status Row 3
32–39	2	Relay Element Status Row 4
40–47	2	Relay Element Status Row 5
48–55	2	Relay Element Status Row 6
56–63	2	Relay Element Status Row 7
64–71	2	Relay Element Status Row 8
72–79	2	Relay Element Status Row 9
80–87	2	Relay Element Status Row 10
88–95	2	Relay Element Status Row 11
96–103	2	Relay Element Status Row 12
104–111	2	Relay Element Status Row 13
112–119	2	Relay Element Status Row 14

Table E.7 02h SEL-2664S Inputs (Sheet 2 of 2)

Coil Address (Decimal)	Function Code Supported	Coil Description[a]
120–127	2	Relay Element Status Row 15
128–135	2	Relay Element Status Row 16
136–143	2	Relay Element Status Row 17
144–151	2	Relay Element Status Row 18
152–159	2	Relay Element Status Row 19
160–167	2	Relay Element Status Row 20
168–175	2	Relay Element Status Row 21
176–183	2	Relay Element Status Row 22
184–191	2	Relay Element Status Row 23
192–199	2	Relay Element Status Row 24
200–207	2	Relay Element Status Row 25
208–215	2	Relay Element Status Row 26
216–223	2	Relay Element Status Row 27
224–231	2	Relay Element Status Row 28
232–239	2	Relay Element Status Row 29
240–247	2	Relay Element Status Row 30
248–255	2	Relay Element Status Row 31
256–263	2	Relay Element Status Row 32
264–271	2	Relay Element Status Row 33

[a] The input numbers are assigned from the right-most input to the left-most input in the Relay row as shown in the following example for Row 0.
Address 7 = ENABLED
Address 6 = TRIP_LED
Address 5 = WARN_LED
Address 4 = 64S_LED
Address 3 = 64F_LED
Address 2 = 59N_LED
Address 1 = FGM_LED
Address 0 = INJ_LED

The relay responses to errors in the query are shown in *Table E.8*.

Table E.8 Responses to 02h Read Input Query Errors

Error	Error Code Returned	Communications Counter Increments
Invalid bit to read	Illegal Data Address (02h)	Invalid Address
Invalid number of bits to read	Illegal Data Value (03h)	Illegal Register
Format error	Illegal Data Value (03h)	Bad Packet Format

03h Read Holding Register Command

Use function code 03h to read directly from the Modbus Register Map shown in *Table E.34*. You can read a maximum of 125 registers at once with this function code. Most masters use 4X references with this function code. If you are accustomed to 4X references with this function code, for five-digit addressing, add 40001 to the standard database address.

Table E.9 03h Read Holding Register Command

Bytes	Field
Requests from the master must have the following format:	
1 byte	Slave Address
1 byte	Function Code (03h)
2 bytes	Starting Register Address
2 bytes	Number of Registers to Read
2 bytes	CRC-16
A successful response from the slave will have the following format:	
1 byte	Slave Address
1 byte	Function Code (03h)
1 byte	Bytes of data (*n*)
n bytes	Data (2–250)
2 bytes	CRC-16

The relay responses to errors in the query are shown in *Table E.10*.

Table E.10 Responses to 03h Read Holding Register Query Errors

Error	Error Code Returned	Communications Counter Increments
Illegal register to read	Illegal Data Address (02h)	Invalid Address
Illegal number of registers to read	Illegal Data Value (03h)	Illegal Register
Format error	Illegal Data Value (03h)	Bad Packet Format

04h Read Input Register Command

Use function code 04h to read directly from the Modbus Register Map shown in *Table E.34*. You can read a maximum of 125 registers at once with this function code. Most masters use 3X references with this function code. If you are accustomed to 3X references with this function code, for five-digit addressing, add 30001 to the standard database address.

Table E.11 04h Read Input Register Command (Sheet 1 of 2)

Bytes	Field
Requests from the master must have the following format:	
1 byte	Slave Address
1 byte	Function Code (04h)
2 bytes	Starting Register Address
2 bytes	Number of Registers to Read

Table E.11 04h Read Input Register Command (Sheet 2 of 2)

Bytes	Field
2 bytes	CRC-16
A successful response from the slave will have the following format:	
1 byte	Slave Address
1 byte	Function Code (04h)
1 byte	Bytes of data (*n*)
n bytes	Data (2–250)
2 bytes	CRC-16

The relay responses to errors in the query are shown in *Table E.12*.

Table E.12 Responses to 04h Read Input Register Query Errors

Error	Error Code Returned	Communications Counter Increments
Illegal register to read	Illegal Data Address (02h)	Invalid Address
Illegal number of registers to read	Illegal Data Value (03h)	Illegal Register
Format error	Illegal Data Value (03h)	Bad Packet Format

05h Force Single Coil Command

Use function code 05h to set or clear a coil. In *Table E.13*, the command response is identical to the command request.

Table E.13 05h Force Single Coil Command

Bytes	Field
Requests from the master must have the following format:	
1 byte	Slave Address
1 byte	Function Code (05h)
2 bytes	Coil Reference
1 byte	Operation Code (FF for bit set, 00 for bit clear)
1 byte	Placeholder (00)
2 bytes	CRC-16

Table E.14 lists the coil numbers supported by the SEL-2664S. The physical coils (coils 0–26) are self-resetting. Pulsing a Set remote bit (decimal address 59 through 90) causes the remote bit to be cleared at the end of the pulse.

Table E.14 01h, 05h SEL-2664S Output (Sheet 1 of 2)

Coil Address (Decimal)	Function Code Supported	Coil Description
0	01, 05	Pulse OUT01 1 second
1	01, 05	Pulse OUT02 1 second
2	01, 05	Pulse OUT03 1 second
3	01, 05	Pulse OUT04 1 second
4	01, 05	RB01

Table E.14 01h, 05h SEL-2664S Output (Sheet 2 of 2)

Coil Address (Decimal)	Function Code Supported	Coil Description
5	01, 05	RB02
6	01, 05	RB03
7	01, 05	RB04
8	01, 05	RB05
9	01, 05	RB06
10	01, 05	RB07
11	01, 05	RB08
12	01, 05	Pulse RB01[a]
13	01, 05	Pulse RB02[a]
14	01, 05	Pulse RB03[a]
15	01, 05	Pulse RB04[a]
16	01, 05	Pulse RB05[a]
17	01, 05	Pulse RB06[a]
18	01, 05	Pulse RB07[a]
19	01, 05	Pulse RB08[a]

[a] Pulsing a Set remote bit will cause the remote bit to be cleared at the end of the pulse (1 SELOGIC Processing Interval).

Coil addresses start at 0000 (i.e., Coil 1 is located at Coil address 0000). If the device is disabled, it will respond with error code 4 (Device Error). In addition to Error Code 4, the device responses to errors in the query are shown in *Table E.15*.

Table E.15 Responses to 05h Force Single Coil Query Errors

Error	Error Code Returned	Communications Counter Increments
Invalid bit (coil)	Illegal Data Address (02h)	Invalid Address
Invalid bit state requested	Illegal Data Value (03h)	Illegal Register
Format Error	Illegal Data Value (03h)	Bad Packet Format

06h Preset Single Register Command

The SEL-2664S uses this function to allow a Modbus master to write directly to a database register. Refer to the Modbus Register Map in *Table E.34* for a list of registers that can be written by using this function code. If you are accustomed to 4X references with this function code, for six-digit addressing, add 400001 to the standard database addresses.

In *Table E.16*, the command response is identical to the command required by the master.

Table E.16 06h Preset Single Register Command

Bytes	Field
Queries from the master must have the following format:	
1 byte	Slave Address
1 byte	Function Code (06h)

Table E.16 06h Preset Single Register Command

Bytes	Field
2 bytes	Register Address
2 bytes	Data
2 bytes	CRC-16

The relay responses to errors in the query are shown in *Table E.20*.

Table E.17 Responses to 06h Preset Single Register Query Errors

Error	Error Code Returned	Communications Counter Increments
Illegal register address	Illegal Data Address (02h)	Invalid Address Illegal Write
Illegal register value	Illegal Data Value (03h)	Illegal Write
Format error	Illegal Data Value (03h)	Bad Packet Format

08h Loopback Diagnostic Command

The SEL-2664S uses this function to allow a Modbus master to perform a diagnostic test on the Modbus communications channel and relay. When the subfunction field is 0000h, the relay returns a replica of the received message.

Table E.18 08h Loopback Diagnostic Command

Bytes	Field
Requests from the master must have the following format:	
1 byte	Slave Address
1 byte	Function Code (08h)
2 bytes	Subfunction (0000h)
2 bytes	Data Field
2 bytes	CRC-16
A successful response from the slave will have the following format:	
1 byte	Slave Address
1 byte	Function Code (08h)
2 bytes	Subfunction (0000h)
2 bytes	Data Field (identical to data in Master request)
2 bytes	CRC-16

The relay responses to errors in the query are shown in *Table E.19*.

Table E.19 Responses to 08h Loopback Diagnostic Query Errors

Error	Error Code Returned	Communications Counter Increments
Illegal subfunction code	Illegal Data Value (03h)	Invalid Function Code/Op Code
Format error	Illegal Data Value (03h)	Bad Packet Format

10h Preset Multiple Registers Command

This function code works much like code 06h, except that it allows you to write multiple registers at once, as many as 100 an operation. If you are accustomed to 4X references with the function code, for six-digit addressing, simply add 400001 to the standard database addresses.

Table E.20 10h Preset Multiple Registers Command

Bytes	Field
Queries from the master must have the following format:	
1 byte	Slave Address
1 byte	Function Code (10h)
2 bytes	Starting Address
2 bytes	Number of Registers to Write
1 byte	Number of Bytes of Data (*n*)
n bytes	Data
2 bytes	CRC-16
A successful response from the slave will have the following format:	
1 byte	Slave Address
1 byte	Function Code (10h)
2 bytes	Starting Address
2 bytes	Number of Registers
2 bytes	CRC-16

The relay responses to errors in the query are shown below.

Table E.21 10h Preset Multiple Registers Query Error Messages

Error	Error Code Returned	Communications Counter Increments
Illegal register to set	Illegal Data Address (02h)	Invalid Address Illegal Write
Illegal number of registers to set	Illegal Data Value (03h)	Illegal Register Illegal Write
Incorrect number of bytes in query data region	Illegal Data Value (03h)	Bad Packet Format Illegal Write
Invalid register data value	Illegal Data Value (03h)	Illegal Write

60h Read Parameter Information Command

The SEL-2664S uses this function to allow a Modbus master to read parameter information from the relay. One parameter (setting) is read in each query.

Table E.22 60h Read Parameter Information Command

Bytes	Field
Queries from the master must have the following format:	
1 byte	Slave Address
1 byte	Function Code (60h)
2 bytes	Parameter Number
2 bytes	CRC-16
A successful response from the slave will have the following format:	
1 byte	Slave Address
1 byte	Function Code (60h)
2 bytes	Parameter Number
1 byte	Parameter Descriptor
1 byte	Parameter Conversion
2 bytes	Parameter Minimum Settable Value
2 bytes	Parameter Maximum Settable Value
2 bytes	Parameter Default Value
2 bytes	CRC-16

The Parameter Descriptor field is defined in *Table E.23*.

Table E.23 60h Read Parameter Descriptor Field Definition

Bit	Name	Description
0	RO: Read-only	1 when the setting is read-only
1	H: Hidden	1 when the setting is hidden
2	DBL: 32-bit	1 when the following setting is a fractional value of this setting
3	RA: RAM-only	1 when the setting is not saved in nonvolatile memory
4	RR: Read-only if running	1 when the setting is read-only if in running/operational state
5	P: Power Cycle or Reset	1 when the setting change requires a power cycle or reset
6	0	Reserved
7	Extend	Reserved to extend the descriptor table

The Parameter Conversion field is defined in *Table E.24*.

Table E.24 60h Read Parameter Conversion Field Definition (Sheet 1 of 2)

Conversion Value	Type	Multiplier	Divisor	Offset	Base
0	Boolean	1	1	0	1
1	Unsigned Integer	1	1	0	1
2	Unsigned Integer	1	10	0	1
3	Unsigned Integer	1	100	0	1

Table E.24 60h Read Parameter Conversion Field Definition (Sheet 2 of 2)

Conversion Value	Type	Multiplier	Divisor	Offset	Base
4	Unsigned Integer	1	1000	0	1
5	Hexadecimal	1	1	0	1
6	Integer	1	1	0	1
7	Integer	1	10	0	1
8	Integer	1	100	0	1
9	Integer	1	1000	0	1
10	Enumeration	1	1	0	1
11	Bit Enumeration	1	1	0	1

Use *Table E.25* to calculate the actual (not scaled) value of the parameter (setting):

$$\text{value} = \frac{(\text{ParameterValue} + \text{Offset}) \bullet \text{Multiplier} \bullet \text{Base}}{\text{Divisor}}$$

Equation E.1

Use *Table E.25* to calculate the scaled setting value:

$$\text{value} = \frac{\text{value} \bullet \text{Divisor}}{\text{Multiplier} \bullet \text{Base}} - \text{Offset}$$

Equation E.2

The relay response to errors in the query are shown *Table E.25*.

Table E.25 Responses to 60h Read Parameter Information Query Errors

Error	Error Code Returned	Communications Counter Increments
Illegal parameter to read	Illegal Address (02h)	Invalid Address

61h Read Parameter Text Command

The SEL-2664S uses this function to allow a Modbus master to read parameter text from the relay. One parameter text (setting name) is read in each query.

Table E.26 61h Read Parameter Text Command (Sheet 1 of 2)

Bytes	Field
Queries from the master must have the following format:	
1 byte	Slave Address
1 byte	Function Code (61h)
2 bytes	Parameter Number
2 bytes	CRC-16

Table E.26 61h Read Parameter Text Command (Sheet 2 of 2)

Bytes	Field
A successful response from the slave will have the following format:	
1 byte	Slave Address
1 byte	Function Code (61h)
2 bytes	Parameter Number
16 bytes	Parameter Text (setting name)
4 bytes	Parameter Units (e.g., amperes)
2 bytes	CRC-16

The relay responses to errors in the query are shown below.

Table E.27 61h Read Parameter Text Query Error Messages

Error	Error Code Returned	Communications Counter Increments
Illegal parameter to read	Illegal Address (02h)	Invalid Address

62h Read Enumeration Text Command

The SEL-2664S uses this function to allow a Modbus master to read parameter enumeration or bit enumeration values (setting lists) from the relay. One parameter enumeration is read in each query.

Table E.28 62h Read Enumeration Text Command

Bytes	Field
Queries from the master must have the following format:	
1 byte	Slave Address
1 byte	Function Code (62h)
2 bytes	Parameter Number
1 byte	Enumeration Index
2 bytes	CRC-16
A successful response from the slave will have the following format:	
1 byte	Slave Address
1 byte	Function Code (62h)
2 bytes	Parameter Number
1 byte	Enumeration Index
16 bytes	Enumeration Text
2 bytes	CRC-16

The relay responses to errors in the query are shown below.

Table E.29 61h Read Parameter Enumeration Text Query Error Messages

Error	Error Code Returned	Communications Counter Increments
Illegal parameter to read	Illegal Address (02h)	Invalid Address
Illegal enumeration in index	Illegal Data Value (03h)	Illegal Register

7Dh Encapsulated Packet With Control Command

The SEL-2664S uses this function to allow a Modbus master to perform control operations and another Modbus function with one query. The Device Net card will transmit this command periodically to achieve high-speed I/O processing and establish a heartbeat between the DeviceNet card and the main board.

Table E.30 7Dh Encapsulated Packet With Control Command

Bytes	Field
Queries from the master must have the following format:	
1 byte	Slave Address
1 byte	Function Code (7Dh)
2 bytes	Control Command (same as write to 2000h)
1 byte	Embedded Modbus Function
n bytes	Optional Data to Support Modbus Function (0–250)
2 bytes	CRC-16
A successful response from the slave will have the following format:	
1 byte	Slave Address
1 byte	Function Code (7Dh)
2 bytes	Status Information (Register 2100h or 2101h based on Bit 3 in Control Command Word)
1 byte	Embedded Modbus Function
n bytes	Optional data to support the Modbus function (0–250)
2 bytes	CRC-16

Table E.31 shows the format of the relay responses to errors in the query.

Table E.31 7Dh Encapsulated Packet Query Errors

Bytes	Field
Queries from the master must have the following format:	
1 byte	Slave Address
1 byte	Function Code (7Dh)
2 bytes	Status Information (Register 2100h or 2101h based on Bit 3 in Control Command Word)
1 byte	Modbus Function with Error Flag
1 bytes	Function Error Code[a]
2 bytes	CRC-16

[a] If the embedded function code is invalid, then an illegal function code is returned here and the illegal function counter is incriminated. This error code is returned by the embedded function for all valid embedded functions.

7Eh NOP Command

This function code has no operation. This allows a Modbus master to perform a control operation without any other Modbus command. This is only used inside of the 7Dh when no regular Modbus query is required.

Table E.32 7Eh NOP Command

Bytes	Field
An example of a 7D message response using 7E will have the following format:	
1 byte	Slave Address
1 byte	Function Code (7Dh)
2 bytes	Status Information
1 byte	Function Code (7Eh)
2 bytes	CRC-16

Reading Parameter Information and Value Using Modbus

Through use of Modbus commands, you can read the present value of a parameter as well as parameter name, units, low limit, high limit, scale, and even the enumeration string (if the parameter is an enumeration type). This means that you can use a general user interface to retrieve and display specific parameter details from the relay. Use the **60h**, **61h**, and **62h** commands to retrieve parameter information, and use the **03** command to retrieve values.

Controlling Output Contacts Using Modbus

The SEL-2664S includes registers for controlling some of the outputs. See LOGIC COMMAND (2000h), RESET COMMAND (2001h), and registers in the Reset Settings region for the control features supported by the relay. Use Modbus function codes 06h or 10h to write appropriate flags. Remember that when writing to the Logic command register with output contacts, it is not a bit operation. All the bits in that register need to be written together to reflect the state you want for each of the outputs.

User-Defined Modbus Data Region and SET M Command

The SEL-2664S Modbus Register Map defines an area of 125 contiguous addresses whose contents are defined by 125 user settable addresses. This feature allows you to take 125 discrete values from anywhere in the Modbus Register Map and place them in contiguous registers that you can then read in a single command. SEL ASCII command **SET M** provides a convenient method to define the user map addresses. The user map can also be defined by writing to user map registers MOD_001 to MOD_125.

To use the user-defined data region, follow the steps listed below:

Step 1. Define the list of quantities you want (as many as 125). Arrange the quantities in any order convenient for you.

Step 2. Refer to *Table E.33* for a list of the Modbus label for each quantity.

Step 3. Execute **SET M** command from the command line to map user registers 001 to 125 (MOD_001 to MOD_125) using the labels in *Table E.33*.

Step 4. Note that this step can also be performed using Modbus protocol. Use Modbus Function Code 06h to write to registers MOD_001 through MOD_125.

Step 5. Use Modbus function code 03h or 04h to read the quantities you want from addresses 126 through 250 (user map values).

Table E.33 Modbus Register Labels for Use With SET M Command

Register Address	Label
261	RSTDAT
262	Reserved
263	SEC
264	MIN
265	HOUR
266	DAY
267	MONTH
268	YEAR
269	Reserved
270	Reserved
271	FPGA
272	GPSB
273	RAM
274	ROM
275	CR_RAM
276	NON_VOL
277	CLKSTS
278	CID_FILE
279	P0P9PS
280	P1P2PS
281	P1P5PS
282	P1P8PS
283	P2P5PS
284	P3P3PS
285	P5PS
286	N5PS
287	CLKBAT
288	AMPLSTS
289	VTMPSTS
290	VINX1ST
291	VINX10ST
292	IINJSTS
293	INSTS
294	VP24STS
295	VN24STS
296	ADCSTS
297	F64COMM
298	F64STS
299	RLYSTS
300–318	Reserved
319	INS_RES
320	INS_CAP
321	MES_NGR
322	FLDRES
323	VN1_MAG
324	VN3_MAG
325	VN_RMS
326	I_SRC
327	IN_RMS
328	VNF1_MAG
329	INF1_MAG
330	INS_RES1
331	VNF2_MAG
332	INF2_MAG
333	INS_RES2
334	VNF3_MAG
335	INF3_MAG
336	INS_RES3
337	VNF4_MAG
338	INF4_MAG
339	INS_RES4
340	IN3_MAG
341–404	Reserved
405	MV01H
406	MV01L
407	MV02H
408	MV02L
409	MV03H
410	MV03L
411	MV04H
412	MV04L
413	MV05H
414	MV05L
415	MV06H
416	MV06L
417	MV07H
418	MV07L
419	MV08H
420	MV08L
421–468	Reserved
469	SC01
470	SC02
471	SC03
472	SC04
473	SC05
474	SC06
475	SC07
476	SC08
477–500	Reserved
501	NUMEVE
502	EVESEL
503	EVE_S
504	EVEMN
505	EVE_H
506	EVE_D
507	EVEMO
508	EVE_Y
509	EVE_TYPE
510	EVE_TRGT
511	EVE_IRES
512	EVE_ICAP
513	EVE_NGR
514	EVE_FRES
515	EVE_VRMS
516	EVE_ISRC
517	EVE_IRMS
518–540	Reserved
541	TRIP_LO
542	TRIP_HI
543	WARN_LO
544	WARN_HI
545–550	Reserved
551	NUMRCV
552	NUMOTH
553	INVADR
554	BADCRC
555	UARTERR
556	ILLFUNC
557	ILLREG
558	ILLWR
559	BADPKTF
560	BADPKTL
561–630	Reserved
631	ROW_0
632	ROW_1
633	ROW_2
634	ROW_3
635	ROW_4
636	ROW_5
637	ROW_6
638	ROW_7
639	ROW_8
640	ROW_9
641	ROW_10
642	ROW_11
643	ROW_12
644	ROW_13
645	ROW_14
646	ROW_15
647	ROW_16
648	ROW_17
649	ROW_18
650	ROW_19
651	ROW_20
652	ROW_21
653	ROW_22
654	ROW_23
655	ROW_24
656	ROW_25
657	ROW_26
658	ROW_27
659	ROW_28
660	ROW_29
661	ROW_30
662	ROW_31
663	ROW_32
664	ROW_33
665	NA

Reading History Data Using Modbus

Through use of the Modbus Register Map (*Table E.34*), you can download a complete history of the last 50 events via Modbus. The history contains the date and time stamp, type of event that triggered the report, currents, and voltages at the time of the event. Refer to the Historical Data section in the map.

To use Modbus to download history data, including TRIP TYPE information, write the event number of interest (1–50) to the EVENT LOG SEL register at address 1747. Then read the history of the specific event number you requested from the registers shown in the Historical Data section of the Modbus Register Map (*Table E.34*). After a power cycle, the history data registers will show the history data corresponding to the latest event. This is dynamically updated, as whenever there is a new event, the history data registers will be automatically updated with new event data. If specific event number data have been retrieved using a write to the EVENT LOG SEL register, the event data registers will stay frozen with that specific event history. This will return to the free running mode when a zero is written to the event selection register from a prior nonzero selection.

Modbus Register Map

Table E.34 lists the data available in the Modbus interface and their description, range, and scaling information. The table also shows the parameter number for access using the DeviceNet interface. The DeviceNet parameter number is obtained by adding 100 to the Modbus register address.

Table E.34 Modbus Register Map[a] (Sheet 1 of 12)

Modbus Register Address[b]	Name/Enums	Units	Min	Max	Default	Scale Factor
0 (R)	Reserved[c]		0	100	1	
User Map Register						
1–125 (R/W)	USER REG #1–USER REG #125		280	1980		1
User Map Register Values						
126–250 (R)	USER REG#1 VAL–USER REG#125 VAL		0	65535	0	1
251–260 (R)	Reserved[c]		0	0	0	
Reset Settings						
261 (R/W)	RESET DATA Bit 0 = TRIP RESET Bit 1 = Reserved Bit 2 = RESET STAT DATA Bit 3 = RESET HIST DATA Bit 4 = RESET COMM CNTR Bits 5–15 = Reserved		0	4095	0	
262 (R)	Reserved[c]		0	0	0	1
Date/Time Settings						
263 (R/W)	SET SEC		0	5999	0	.01
264 (R/W)	SET MIN		0	59	0	1
265 (R/W)	SET HOUR		0	23	0	1

Table E.34 Modbus Register Map[a] (Sheet 2 of 12)

Modbus Register Address[b]	Name/Enums	Units	Min	Max	Default	Scale Factor
266 (R/W)	SET DAY		1	31	1	1
267 (R/W)	SET MONTH		1	12	1	1
268 (R/W)	SET YEAR		2000	9999	2000	1
269–270 (R)	Reserved[c]		0	0	0	1
Device Status 0 = OK 1 = WARN 2 = FAIL						
271 (R)	FPGA STATUS		0	2	1	1
272 (R)	GPSB STATUS		0	2	1	1
273 (R)	RAM STATUS		0	2	1	1
274 (R)	ROM STATUS		0	2	1	1
275 (R)	CR_RAM STATUS		0	2	1	1
276 (R)	NON_VOL STATUS		0	2	1	1
277 (R)	CLOCK STATUS		0	2	1	1
278 (R)	CID FILE STATUS		0	2	1	1
279 (R)	+0.9V STATUS		0	2	1	1
280 (R)	+1.2V STATUS		0	2	1	1
281 (R)	+1.5V STATUS		0	2	1	1
282 (R)	+1.8V STATUS		0	2	1	1
283 (R)	+2.5V STATUS		0	2	1	1
284 (R)	+3.3V STATUS		0	2	1	1
285 (R)	+5.0V STATUS		0	2	1	1
286 (R)	-5.0V STATUS		0	2	1	1
287 (R)	CLK_BAT STATUS		0	2	1	1
288 (R)	AMPLIFIER STATUS		0	2	1	1
289 (R)	Vtemp STATUS		0	2	1	1
290 (R)	VinjX1 STATUS		0	2	1	1
291 (R)	VinjX10 STATUS		0	2	1	1
292 (R)	Iinj STATUS		0	2	1	1
293 (R)	In STATUS		0	2	1	1
294 (R)	Viso+24 STATUS		0	2	1	1
295 (R)	Viso-24 STATUS		0	2	1	1
296 (R)	ADCchk STATUS		0	2	1	1
297 (R)	64F COMM STATUS		0	2	1	1
298 (R)	64F MODUL STATUS		0	2	1	1
299 (R)	RELAY STATUS		0	1	1	1
300–318 (R)	Reserved[c]		0	0	0	
Metering Data						
319 (R)	Stator Ins Resist	kΩ	0	65535	1	.01
320 (R)	Stator Ins Cap	uF	0	65535	1	.001
321 (R)	Neut. Gnd Resist	Ohm	0	65535	1	.01
322 (R)	Field Ins Resist	kΩ	0	65535	1	1

Table E.34 Modbus Register Map[a] (Sheet 3 of 12)

Modbus Register Address[b]	Name/Enums	Units	Min	Max	Default	Scale Factor
323 (R)	Fund Neut. Volt	Vsec	0	65535	1	.01
324 (R)	3Harm Neut Volt	Vsec	0	65535	1	.01
325 (R)	Neutral RMS Volt	Vsec	0	65535	1	.01
326 (R)	Inj. RMS Volt	Asec	0	65535	1	.01
327 (R)	Neut. RMS Curr	Asec	0	65535	1	.001
328 (R)	15/18 Hz Inj V	Vsec	0	65535	1	.01
329 (R)	15/18 Hz Inj I	Asec	0	65535	1	.001
330 (R)	15/18 Hz Insulat	kΩ	0	65535	1	.01
331 (R)	20/24 Hz Inj V	Vsec	0	65535	1	.01
332 (R)	20/24 Hz Inj I	Asec	0	65535	1	.001
333 (R)	20/24 Hz Insulat	kΩ	0	65535	1	.01
334 (R)	30/36 Hz Inj V	Vsec	0	65535	1	.01
335 (R)	30/36 Hz Inj I	Asec	0	65535	1	.001
336 (R)	30/36 Hz Insulat	kΩ	0	65535	1	.01
337 (R)	40/48 Hz Inj V	Vsec	0	65535	1	.01
338 (R)	40/48 Hz Inj I	Asec	0	65535	1	.001
339 (R)	40/48 Hz Insulat	kΩ	0	65535	1	.01
340 (R)	3Harm Neut Curr	Asec	0	65535	1	.001
341–404 (R)	Reserved[c]		0	0	0	
Math Variables						
405 (R)	MV01—HI		–32768	32767	1	.01
406 (R)	MV01—LO		–32768	32767	1	.01
407 (R)	MV02—HI		–32768	32767	1	.01
408 (R)	MV02—LO		–32768	32767	1	.01
409 (R)	MV03—HI		–32768	32767	1	.01
410 (R)	MV03—LO		–32768	32767	1	.01
411 (R)	MV04—HI		–32768	32767	1	.01
412 (R)	MV04—LO		–32768	32767	1	.01
413 (R)	MV05—HI		–32768	32767	1	.01
414 (R)	MV05—LO		–32768	32767	1	.01
415 (R)	MV06—HI		–32768	32767	1	.01
416 (R)	MV06—LO		–32768	32767	1	.01
417 (R)	MV07—HI		–32768	32767	1	.01
418 (R)	MV07—LO		–32768	32767	1	.01
419 (R)	MV08—HI		–32768	32767	1	.01
420 (R)	MV08—LO		–32768	32767	1	.01
421–468 (R)	Reserved[c]		0	0	0	

Table E.34 Modbus Register Map[a] (Sheet 4 of 12)

Modbus Register Address[b]	Name/Enums	Units	Min	Max	Default	Scale Factor
Device Counters						
469 (R)	COUNTER SC01		0	65000	1	1
•	•					
•	•					
•	•					
476 (R)	COUNTER SC08		0	65000	1	1
477–500 (R)	Reserved[c]		0	0	0	
Historical Data						
501 (R)	NO. EVENT LOGS		0	50	0	1
502 (R/W)	EVENT LOG SEL.		0	50	0	1
503 (R)	EVENT TIME ss		0	5999	0	.01
504 (R)	EVENT TIME mm		0	59	0	1
505 (R)	EVENT TIME hh		0	23	0	1
506 (R)	EVENT DAY dd		1	31	1	1
507 (R)	EVENT DAY mm		1	12	1	1
508 (R)	EVENT DAY yy		2000	9999	2000	1
509 (R)	EVENT TYPE 0 = TRIP* 1 = 64S TRIP 2 = 64F TRIP 3 = 59N TRIP 4 = TRIGGER 5 = ER TRIGGER 6 = TRIP		0	6	0	1
510 (R)	EVENT TARGETS Bit 0 = INJ_LED Bit 1 = FGM_LED Bit 2 = 59N_LED Bit 3 = 64F_LED Bit 4 = 64S_LED Bit 5 = WARN_LED Bit 6 = TRIP_LED Bit 7 = ENABLED		0	255	0	1
511 (R)	EVENT INS_RES	kΩ	0	65535	1	.01
512 (R)	EVENT INS_CAP	uF	0	65535	1	.001
513 (R)	EVENT MES_NGR	Ohm	0	65535	1	.01
514 (R)	EVENT FLDRES	kΩ	0	65535	1	1
515 (R)	EVENT VN_RMS	Vsec	0	65535	1	.01
516 (R)	EVENT I_SRC	Asec	0	65535	1	.01
517 (R)	EVENT IN_RMS	Asec	0	65535	1	1
518–540 (R)	Reserved[c]		0	0	0	

Table E.34 Modbus Register Map[a] (Sheet 5 of 12)

Modbus Register Address[b]	Name/Enums	Units	Min	Max	Default	Scale Factor
Trip/Warn Data						
541 (R)	TRIP STATUS LO Bit 0 = TRIP Bit 1 = 64S Bit 2 = 64F Bit 3 = 59N Bit 4 = 64S L1 Bit 5 = 64S L2 Bit 6 = 64F L1 Bit 7 = 64F L2 Bit 8 = 59N RMS Bits 9–15 = Reserved		0	65535	0	1
542 (R)	TRIP STATUS HI Bits 0–15 = Reserved		0	65535	0	1
543 (R)	WARN STATUS LO Bit 0 = WARNING Bit 1 = HALARM Bit 2 = SALARM Bits 3–15 = Reserved		0	65535	0	1
544 (R)	WARN STATUS HI Bits 0–15 = Reserved		0	65535	0	1
545–549 (R)	Reserved[c]		0	0	0	
Common Counters						
551	NUM MSG RCVD		0	65535	0	1
552	NUM OTHER MSG		0	65535	0	1
553	INVALID ADDR		0	65535	0	1
554	BAD CRC		0	65535	0	1
555	UART ERROR		0	65535	0	1
556	ILLEGAL FUNCTION		0	65535	0	1
557	ILLEGAL REGISTER		0	65535	0	1
558	ILLEGAL WRITE		0	65535	0	1
559	BAD PKT FORMAT		0	65535	0	1
560	BAD PKT LENGTH		0	65535	0	1
561–630 (R)	Reserved[c]		0	0	0	

Table E.34 Modbus Register Map[a] (Sheet 6 of 12)

Modbus Register Address[b]	Name/Enums	Units	Min	Max	Default	Scale Factor
Relay Elements						
Only a few Relay Element rows have bit enumerations specific to that row. Other Relay Element rows have generic bit enumerations, as shown for row 10. See *Table E.7* for element information in these rows.						
Relay Elements						
631 (R)	ROW O Bit 0 = INJ_LED Bit 1 = FGM_LED Bit 2 = 59N_LED Bit 3 = 64F_LED Bit 4 = 64S_LED Bit 5 = WARN_LED Bit 6 = TRIP_LED Bit 7 = ENABLED		0	255	1	1
632 (R)	ROW 1 Bit 0 = SHUTDOWN Bit 1 = AMP_LO Bit 2 = AMP_ON Bit 3 = 64S2T Bit 4 = 64S2 Bit 5 = 64S1T Bit 6 = 64S1 Bit 7 = E64S		0	255	1	1
633 (R)	ROW 2 Bit 0 = 59NRMST Bit 1 = 59NRMS Bit 2 = 59N1T Bit 3 = 59N1 Bit 4 = OUT_OPEN Bit 5 = DCSW_STS Bit 6 = CNT_FULL Bit 7 = EN_RETRY		0	255	1	1
634 (R)	ROW 3 Bit 0 = VN3HIGH Bit 1 = 64FFLT Bit 2 = 64F2T Bit 3 = 64F2 Bit 4 = 64F2C Bit 5 = 64F1T Bit 6 = 64F1 Bit 7 = 64F1C		0	255	1	1

Table E.34 Modbus Register Map[a] (Sheet 7 of 12)

Modbus Register Address[b]	Name/Enums	Units	Min	Max	Default	Scale Factor
635 (R)	ROW 4 Bit 0 = * Bit 1 = * Bit 2 = * Bit 3 = * Bit 4 = TRGTR Bit 5 = ULTRIP Bit 6 = TR Bit 7 = TRIP		0	255	1	1
636 (R)	ROW 5 Bit 0 = * Bit 1 = * Bit 2 = * Bit 3 = CTN_OPEN Bit 4 = AMP_RAIL Bit 5 = LOW_ISRC Bit 6 = NGROPEN Bit 7 = NGRSHORT		0	255	1	1
637 (R)	ROW 6 Bit 0 = * Bit 1 = * Bit 2 = * Bit 3 = * Bit 4 = * Bit 5 = * Bit 6 = IN02 Bit 7 = IN01		0	255	1	1
638 (R)	ROW 7 Bit 0 = OUT01 Bit 1 = OUT02 Bit 2 = OUT03 Bit 3 = OUT04 Bit 4 = * Bit 5 = * Bit 6 = * Bit 7 = *		0	255	1	1
639 (R)	ROW 8 Bit 0 = * Bit 1 = * Bit 2 = TESTDB Bit 3 = * Bit 4 = * Bit 5 = WARNING Bit 6 = * Bit 7 = RELAY_EN		0	255	1	1

Table E.34 Modbus Register Map[a] (Sheet 8 of 12)

Modbus Register Address[b]	Name/Enums	Units	Min	Max	Default	Scale Factor
640 (R)	ROW 9 Bit 0 = * Bit 1 = * Bit 2 = * Bit 3 = * Bit 4 = * Bit 5 = RSTTRGT Bit 6 = * Bit 7 = ER		0	255	1	1
641 (R)	ROW 10 Bit 0 = * Bit 1 = * Bit 2 = 64F2TC Bit 3 = 64F1TC Bit 4 = 59NRMSTC Bit 5 = 59N1TC Bit 6 = 64S2TC Bit 7 = 64S1TC		0	255	1	1
642 (R)	ROW 11 Bit 0 = LT08 Bit 1 = LT07 Bit 2 = LT06 Bit 3 = LT05 Bit 4 = LT04 Bit 5 = LT03 Bit 6 = LT02 Bit 7 = LT01		0	255	1	1
643 (R)	ROW 12 Bit 0 = SV08 Bit 1 = SV07 Bit 2 = SV06 Bit 3 = SV05 Bit 4 = SV04 Bit 5 = SV03 Bit 6 = SV02 Bit 7 = SV01		0	255	1	1
644 (R)	ROW 13 Bit 0 = SV08T Bit 1 = SV07T Bit 2 = SV06T Bit 3 = SV05T Bit 4 = SV04T Bit 5 = SV03T Bit 6 = SV02T Bit 7 = SV01T		0	255	1	1

Table E.34 Modbus Register Map[a] (Sheet 9 of 12)

Modbus Register Address[b]	Name/Enums	Units	Min	Max	Default	Scale Factor
645 (R)	ROW 14 Bit 0 = SC08QU Bit 1 = SC07QU Bit 2 = SC06QU Bit 3 = SC05QU Bit 4 = SC04QU Bit 5 = SC03QU Bit 6 = SC02QU Bit 7 = SC01QU		0	255	1	1
646 (R)	ROW 15 Bit 0 = SC08QD Bit 1 = SC07QD Bit 2 = SC06QD Bit 3 = SC05QD Bit 4 = SC04QD Bit 5 = SC03QD Bit 6 = SC02QD Bit 7 = SC01QD		0	255	1	1
647 (R)	ROW 16 Bit 0 = RB08 Bit 1 = RB07 Bit 2 = RB06 Bit 3 = RB05 Bit 4 = RB04 Bit 5 = RB03 Bit 6 = RB02 Bit 7 = RB01		0	255	1	1
648 (R)	ROW 17 Bit 0 = VB008 Bit 1 = VB007 Bit 2 = VB006 Bit 3 = VB005 Bit 4 = VB004 Bit 5 = VB003 Bit 6 = VB002 Bit 7 = VB001		0	255	1	1
649 (R)	ROW 18 Bit 0 = VB016 Bit 1 = VB015 Bit 2 = VB014 Bit 3 = VB013 Bit 4 = VB012 Bit 5 = VB011 Bit 6 = VB010 Bit 7 = VB009		0	255	1	1

Table E.34 Modbus Register Map[a] (Sheet 10 of 12)

Modbus Register Address[b]	Name/Enums	Units	Min	Max	Default	Scale Factor
650 (R)	ROW 19 Bit 0 = VB024 Bit 1 = VB023 Bit 2 = VB022 Bit 3 = VB021 Bit 4 = VB020 Bit 5 = VB019 Bit 6 = VB018 Bit 7 = VB017		0	255	1	1
651 (R)	ROW 20 Bit 0 = VB032 Bit 1 = VB031 Bit 2 = VB030 Bit 3 = VB029 Bit 4 = VB028 Bit 5 = VB027 Bit 6 = VB026 Bit 7 = VB025		0	255	1	1
652 (R)	ROW 21 Bit 0 = * Bit 1 = * Bit 2 = * Bit 4 = * Bit 5 = * Bit 6 = * Bit 7 = HALARM		0	255	1	1
653 (R)	ROW 22 Bit 0 = * Bit 1 = * Bit 2 = * Bit 3 = MATHERR Bit 4 = * Bit 5 = * Bit 6 = * Bit 7 = SALARM		0	255	1	1
654 (R)	ROW 23 Bit 0 = * Bit 1 = * Bit 2 = PBSEL Bit 3 = PASEL Bit 4 = LINKFAIL Bit 5 = LINKB Bit 6 = LINKA Bit 7 = *		0	255	1	1

Table E.34 Modbus Register Map[a] (Sheet 11 of 12)

Modbus Register Address[b]	Name/Enums	Units	Min	Max	Default	Scale Factor
655 (R)	ROW 24 Bit 0 = * Bit 1 = * Bit 2 = IRIGOK Bit 3 = LPSECP Bit 4 = LPSEC Bit 5 = DSTP Bit 6 = DST Bit 7 = TSOK		0	255	1	1
656 (R)	ROW 25 Bit 0 = TUTCH Bit 1 = TUTC8 Bit 2 = TUTC4 Bit 3 = TUTC2 Bit 4 = TUTC1 Bit 5 = TUTCS Bit 6 = TSNTPP Bit 7 = TSNTPB		0	255	1	1
657 (R)	ROW 26 Bit 0 = * Bit 1 = * Bit 2 = T06_LED Bit 3 = T05_LED Bit 4 = T04_LED Bit 5 = T03_LED Bit 6 = T02_LED Bit 7 = T01_LED		0	255	1	1
658 (R)	ROW 27 Bit 0 = RMB1A Bit 1 = RMB2A Bit 2 = RMB3A Bit 3 = RMB4A Bit 4 = RMB5A Bit 5 = RMB6A Bit 6 = RMB7A Bit 7 = RMB8A		0	255	1	1
659 (R)	ROW 28 Bit 0 = TMB1A Bit 1 = TMB2A Bit 2 = TMB3A Bit 3 = TMB4A Bit 4 = TMB5A Bit 5 = TMB6A Bit 6 = TMB7A Bit 7 = TMB8A		0	255	1	1

Table E.34 Modbus Register Map[a] (Sheet 12 of 12)

Modbus Register Address[b]	Name/Enums	Units	Min	Max	Default	Scale Factor
660 (R)	ROW 29 Bit 0 = RMB1B Bit 1 = RMB2B Bit 2 = RMB3B Bit 3 = RMB4B Bit 4 = RMB5B Bit 5 = RMB6B Bit 6 = RMB7B Bit 7 = RMB8B		0	255	1	1
661 (R)	ROW 30 Bit 0 = TMB1B Bit 1 = TMB2B Bit 2 = TMB3B Bit 3 = TMB4B Bit 4 = TMB5B Bit 5 = TMB6B Bit 6 = TMB7B Bit 7 = TMB8B		0	255	1	1
662 (R)	ROW 31 Bit 0 = ROKA Bit 1 = RBADA Bit 2 = CBADA Bit 3 = LBOKA Bit 4 = ROKB Bit 5 = RBADB Bit 6 = CBADB Bit 7 = LBOKB		0	255	1	1
663 (R)	ROW 32 Bit 0 = * Bit 1 = * Bit 2 = * Bit 3 = * Bit 4 = * Bit 5 = * Bit 6 = * *		0	255	1	1
664 (R)	ROW 33 Bit 0 = * Bit 1 = * Bit 2 = * Bit 3 = * Bit 4 = * Bit 5 = * Bit 6 = * *		0	255	1	1

[a] All addresses in this table refer to the register addresses in the Modbus packet.

[b] Registers labeled (R)/(W) are read-write registers. Registers labeled (W) are write-only registers. Registers Labeled (R) are read-only registers.

[c] Reserved addresses return 0.

APPENDIX F

IEC 61850 Communications

Features

NOTE: The SEL-2664S supports one CID file, which should be transferred only if a change in the relay configuration is necessary. If an invalid CID file is transferred, the relay no longer has a valid IEC 61850 configuration, and the protocol stops operating. To restart protocol operation, a valid CID must be transferred to the relay.

The SEL-2664S uses Ethernet and IEC 61850 to support the following features:

- SCADA—Connect as many as six simultaneous IEC 61850 MMS client sessions. The SEL-2664S also supports as many as six buffered and six unbuffered report control blocks. See the CON Logical Device Table for Logical Node mapping that enables SCADA control via a Manufacturing Messaging Specification (MMS) browser. Controls support the direct control, Select Before Operate (SBO) control, and SBO with enhanced security control models.
- Peer-to-Peer Real-Time Status and Control—Use GOOSE with as many as 16 incoming (receive) and 8 outgoing (transmit) messages. You can map virtual bits (VB001–VB032) from incoming GOOSE messages.
- Configuration—Use FTP client software or ACSELERATOR Architect® SEL-5032 Software to transfer the Substation Configuration Language (SCL) Configured IED Description (CID) file to the relay.
- Commissioning and Troubleshooting—Use software such as MMS Object Explorer and AX-S4 MMS from Sisco, Inc., to browse the relay logical nodes and verify functionality.

This appendix presents the information you need to use the IEC 61850 features of the SEL-2664S:

- Introduction to IEC 61850
- IEC 61850 Operation
- IEC 61850 Configuration
- Logical Nodes
- Logical Node Extensions
- Protocol Implementation Conformance Statement
- ACSI Conformance Statement

Introduction to IEC 61850

In the early 1990s, the Electric Power Research Institute (EPRI) and the Institute of Electrical and Electronics Engineers, Inc. (IEEE) began to define a Utility Communications Architecture (UCA). They initially focused on inter-control center and substation-to-control center communication and produced the Inter-Control Center Communications Protocol (ICCP) specification. This specification, later adopted by the IEC as 60870-6 TASE.2, became the standard protocol for real-time exchange of data between databases.

In 1994, EPRI and IEEE began work on UCA 2.0 for Field Devices (simply referred to as UCA2). In 1997, they combined efforts with Technical Committee 57 of the IEC to create a common international standard. Their joint efforts created the current IEC 61850 standard.

The IEC 61850 standard, a superset of UCA2, contains most of the UCA2 specification, plus additional functionality. The standard describes client/server and peer-to-peer communication, substation design and configuration, testing, and project standards. The IEC 61850 standard consists of the parts listed in *Table F.1*.

Table F.1 IEC 61850 Document Set

IEC 61850 Sections	Definitions
IEC 61850-1	Introduction and overview
IEC 61850-2	Glossary
IEC 61850-3	General requirements
IEC 61850-4	System and project management - Ed.2
IEC 61850-5	Communications requirements for functions and device models
IEC 61850-6	Configuration language for communication in electrical substations related to IEDs - Ed.2
IEC 61850-7	Basic communications structure for substations and feeder equipment
IEC 61850-7-1	Principles and models - Ed. 2
IEC 61850-7-2	Abstract communications service interface (ACSI) - Ed.2
IEC 61850-7-3	Common data classes - Ed. 2
IEC 61850-7-4	Compatible logical node (LN) classes and data classes
IEC 61850-7-10	Communications networks and systems in power utility automation - Requirements for web-based and structured access to the IEC 61850 information models [Approved new work]
IEC 61850-8	Specific communications service mapping (SCSM)
IEC 61850-8-1	Mappings to MMS (ISO/IEC9506-1 and ISO/IEC 9506-2) - Ed.2
IEC 61850-9	Specific communications service mapping (SCSM)
IEC 61850-9-1	SCSM-Sampled values over serial unidirectional multidrop point-to-point link
IEC 61850-9-2	Sampled values over ISO/IEC 8802-3 - Ed. 2
IEC 61850-10	Conformance testing

IEC 61850 Operation

Ethernet Networking

IEC 61850 and Ethernet networking are available as options in the SEL-2664S. In addition to IEC 61850, the Ethernet port provides support protocols and data exchange, including FTP and Telnet. Access the SEL-2664S Port 1 settings to configure all of the Ethernet settings, including IEC 61850 enable settings.

The SEL Ethernet port supports IEC 61850 services, including transport of logical node objects, over TCP/IP. The Ethernet port can coordinate a maximum of six concurrent IEC 61850 sessions.

Object Models

The IEC 61850 standard relies heavily on the Abstract Communication Service Interface (ACSI) model to define a set of service and the responses to those services. In terms of network behavior, abstract modeling enables all IEDs to act identically. You can use these abstract models to create objects (data items) and services that exist independently of any underlying protocols. These objects are in conformance with the common data class (CDC) specification IEC 61850-7-3, which describes the type and structure of each element within a logical node. CDCs for status, measurements, controllable analogs and statuses, and settings all have unique CDC attributes. Each CDC attribute belongs to a set of functional constraints that groups the attributes into specific categories such as status (ST), description (DC), and substituted value (SV). Functional constraints, CDCs and CDC attributes are used as building blocks for defining Local Nodes.

UCA2 uses GOMSFE (Generic Object Models for Substation and Feeder Equipment) to present data from station IEDs as a series of objects called models or bricks. The IEC working group has incorporated GOMSFE concepts into the standard, with some modifications to terminology; one change was the renaming of bricks to logical nodes. Each logical node represents a group of data (controls, status, measurements, etc.) associated with a particular function. For example, the MMXU logical node (polyphase measurement unit) contains measurement data and other points associated with three-phase metering including voltages and currents. Each IED can contain many functions such as protection, metering, and control. Multiple logical nodes represent the functions in multifunction devices.

You can organize logical nodes into logical devices that are similar to directories on a computer disk. As represented in the IEC 61850 network, each physical device can contain many logical devices, and each logical device can contain many logical nodes. Many relays, meters, and other IEC 61850 devices contain one primary logical device where all models are organized.

IEC 61850 devices are capable of self-description. You do not need to refer to the specifications for the logical nodes, measurements, and other components to request data from another IEC 61850 device. IEC 61850 clients can request and display a list and description of the data available in an IEC 61850 server device. This process is similar to the autoconfiguration process used within SEL communications processors (SEL-2032 and SEL-2030). Simply run an MMS browser to query devices on an IEC 61850 network and discover what data are available. Self-description also permits extensions to both standard and custom data models. Instead of having to look up data in a profile stored in its database, an IEC 61850 client can simply query an IEC 61850 device and receive a description of all logical devices, logical nodes, and available data.

Unlike other Supervisory Control and Data Acquisition (SCADA) protocols that present data as a list of addresses or indices, IEC 61850 presents data with descriptors in a composite notation made up of components. *Table F.2* shows how the A-phase current expressed as MMXUAphsA$cVal is broken down into its component parts.

Table F.2 Example IEC 61850 Descriptor Components

Components		Description
MMXU	Logical Node	Polyphase measurement unit
A	Data Object	Phase-to-ground amperes
PhsA	Sub-Data Object	Phase A
cVal	Data Attribute	Complex value

Data Mapping

Device data are mapped to IEC 61850 logical nodes (LN) according to rules SEL has defined. Refer to IEC 61850-5:2003(E) and IEC 61850-7-4:2003(E) for the mandatory content and usage of these LNs. The SEL-2664S logical nodes are grouped under Logical Devices for organization based on function. See *Table F.3* for descriptions of the Logical Devices in an SEL-2664S. See *Logical Nodes* for a description of the LNs that make up these Logical Devices.

Table F.3 SEL-2664S Logical Devices

Logical Device	Description
ANN	Annunciator elements—alarms, status values
CFG	Configuration elements—datasets and report control blocks
CON	Control elements—Remote bits
MET	Metering or Measurement elements—currents, voltages, power, etc.
PRO	Protection elements—protection functions and breaker control

MMS

Manufacturing Messaging Specification (MMS) provides services for the application-layer transfer of real-time data within a substation LAN. MMS was developed as a network independent data exchange protocol for industrial networks in the 1980s and standardized as ISO 9506.

In theory, you can map IEC 61850 to any protocol. However, it can be unwieldy and quite complicated to map objects and services to a protocol that only provides access to simple data points via registers or index numbers. MMS supports complex named objects and flexible services that enable mapping to IEC 61850 in a straightforward manner. This was why the UCA users group used MMS for UCA from that start, and why the IEC chose to keep it for IEC 61850.

GOOSE

The GOOSE object within IEC 61850 is for high-speed control messaging. IEC 61850 GOOSE automatically broadcasts messages containing status, controls, and measured values onto the network for use by other devices. IEC 61850 GOOSE sends the messages several times, increasing the likelihood that other devices receive the messages.

IEC 61850 GOOSE objects can quickly and conveniently transfer status, controls, and measured values between peers on an IEC 61850 network. Configure SEL devices to respond to GOOSE messages from other networks with Architect. Also, configure outgoing GOOSE messages for SEL devices in Architect. See the Architect online help for more information.

Each IEC 61850 GOOSE sender includes a text identification string (GOOSE Control Block Reference) in each outgoing message and an Ethernet multicast group address. Devices that receive GOOSE messages use the text identification and multicast group to identify and filter incoming GOOSE messages.

Virtual bits (VB001–VB032) are control inputs that you can map to GOOSE receive messages by using Architect. See the VB*nnn* bits in *Table F.7* for details on which logical nodes and names are used for these bits. This information can be useful when searching through device data with MMS browsers. If you intend to use any SEL-2664S virtual bits for controls, you must create SELOGIC control equations to define these operations. The Virtual Bit Logical Nodes only contain Virtual Bit status, and only those Virtual Bits that are assigned to an SER report are able to track bit transitions (via reporting) between LN data update scans.

In addition to the Virtual Bits, the breaker control bits CC and OC can also be mapped to GOOSE receive messages.

File Services

The Ethernet File System allows reading or writing data as files. The File System supports FTP. The File System provides:

- A means for the devices to transfer data as files
- A hierarchical file structure for the device data (root level only for SEL-700 series devices)

SCL Files

Substation Configuration Language (SCL) is an XML-based configuration language used to support the exchange of database configuration data between different tools, which may come from different manufacturers. There are four types of SCL files:

- IED Capability Description file (.ICD)
- System Specification Description (.SSD) file
- Substation Configuration Description file (.SCD)
- Configured IED Description file (.CID)

The ICD file described the capabilities of an IED, including information on LN and GOOSE support. The SSD file describes the single-line diagram of the substation and the necessary LNs. The SCD file contains information on all IEDs, communications configuration data, and a substation description. The CID file, of which there may be several, describes a single instantiated IED within the project, and includes address information.

Reports

The SEL-2664S supports buffered and unbuffered report control blocks in the report model as defined in IEC 61850-8-1:2004(E). The predefined reports shown in *Figure C.1* are available by default via IEC 61850.

ID	Name	Description	Dataset
BRep01	BRep01	Predefined Buffered Report 01	BRDSet01
BRep02	BRep02	Predefined Buffered Report 02	BRDSet02
BRep03	BRep03	Predefined Buffered Report 03	BRDSet03
BRep04	BRep04	Predefined Buffered Report 04	BRDSet04
BRep05	BRep05	Predefined Buffered Report 05	BRDSet05
BRep06	BRep06	Predefined Buffered Report 06	BRDSet06
URep01	URep01	Predefined Unbuffered Report 01	URDSet01
URep02	URep02	Predefined Unbuffered Report 02	URDSet02
URep03	URep03	Predefined Unbuffered Report 03	URDSet03
URep04	URep04	Predefined Unbuffered Report 04	URDSet04
URep05	URep05	Predefined Unbuffered Report 05	URDSet05
URep06	URep06	Predefined Unbuffered Report 06	URDSet06

Figure F.1 SEL-2664S Predefined Reports

There are 12 report control blocks, six buffered reports and six unbuffered. For each report control block, there can be just one client association, i.e., only one client can be associated to a report control block (BRCB or URCB) at any given time. The number of reports (12) and the type of reports (buffered or unbuffered) cannot be changed. However, by using Architect, you can reallocate data within each report dataset to present different data attributes for each report beyond the predefined datasets. For buffered reports, connected clients can edit the report parameters shown in *Table F.4*.

Table F.4 Buffered Report Control Block Client Access

RCB Attribute	User changeable (Report Disabled)	User changeable (Report Enabled)	Default Values
RptId	YES		BRep01–BRep06
RptEna	YES	YES	FALSE
OptFlds	YES		seqNum timeStamp dataSet configRef reasonCode dataRef
BufTm	YES		500
TrgOp	YES		dchg qchg
IntgPd	YES		0
GI	YES[a, b]	YES[a]	FALSE
PurgeBuf	YES[a]		FALSE
EntryId	YES		0

[a] Exhibits a pulse behavior. Write a one to issue the command. Once the command is accepted, it returns to zero. Always read as zero.

[b] When disabled, a GI is processed and the report buffered, if a buffer has been previously established. A buffer is established when the report is enabled for the first time.

Similarly, for unbuffered reports, connected clients can edit the report parameters shown in *Table F.5*.

Table F.5 Unbuffered Report Control Block Client Access

RCB Attribute	User changeable (Report Disabled)	User changeable (Report Enabled)	Default Values
RptId	YES		URep01–URep06
RptEna	YES	YES	FALSE
Resv	YES		FALSE
OptFlds	YES		seqNum timeStamp dataSet configRef reasonCode dataRef
BufTm	YES		250
TrgOps	YES		dchg qchg
IntgPd	YES		0
GI		YES[a]	

[a] Exhibits a pulse behavior. Write a one to issue the command. Once a command is accepted, it returns to zero. Always read as zero.

For buffered reports, only one client can enable the RptEna attribute of the BRCB at a time resulting in a client association for that BRCB. Once enabled, the associated client has exclusive access to the BRCB until the connection is closed or the client disables the RptEna attribute. Once enabled, all unassociated clients have read only access to the BRCB.

For unbuffered reports, as many as six (6) clients can enable the RptEna attribute of the URCB at a time, resulting in multiple client associations for that URCB. Once enabled, each client has independent access to a copy of that URCB. The Resv attribute is writable, however, the SEL-2664S does not support reservations. Writing any field of the URCB causes the client to obtain its own copy of the URCB-in essence, acquiring a reservation.

Reports are serviced at a 2 Hz rate. The client can set the IntgPd to any value with a resolution of 1 ms. However, the integrity report is only sent when the period has been detected as having expired. The report service rate of 2 Hz results in a report being sent within 500 ms of expiration of the IntgPd. The new IntgPd begins at the time that the current report is serviced.

Datasets

Datasets are configured using Architect and contain data attributes which represent real data values within the SEL-2664S device. See *Logical Nodes* for the logical node tables that list the available data attributes for each logical node and the Relay Word bit mapping for these data attributes. The list of datasets in *Figure C.2* shows the defaults for an SEL-2664S device.
Datasets BRDSet01–BRDSet06 and URDSet01–URDSet06 are preconfigured with common FCDAs to be used for reporting. These datasets can be configured to represent the data to be monitored. Dataset GPDSet01 that contains breaker status and control data attributes is used in the default GOOSE Control Publication.

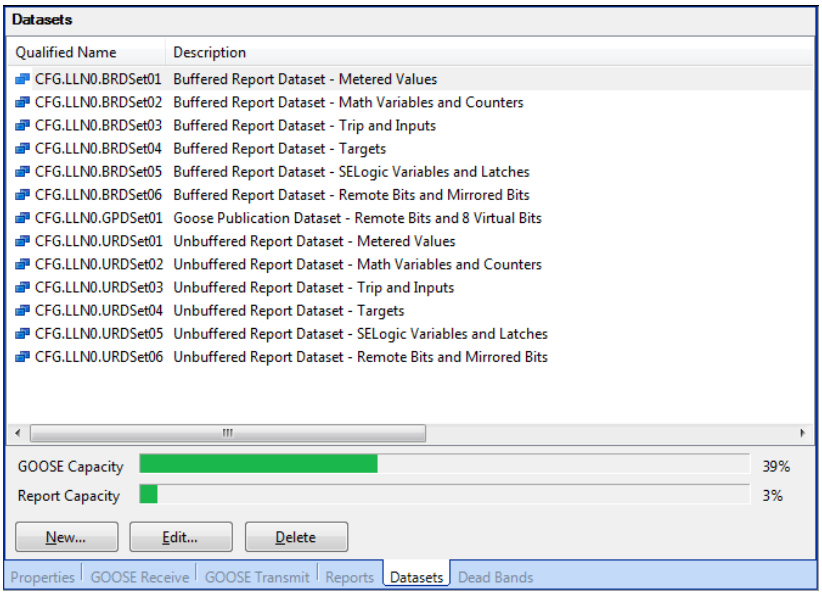

Figure F.2 SEL-2664S Datasets

Within Architect, IEC 61850 datasets have two main purposes:

- GOOSE: You can use predefined or edited datasets, or create new datasets for outgoing GOOSE transmission.
- Reports: Twelve predefined datasets (BRDSet01 to BRDSet06 and URDSet01–URDSet06) correspond to the default six buffered and six unbuffered reports, respectively. Note that you cannot change the number (12) or type of reports (buffered or unbuffered) within Architect. However, you can alter the data attributes that a dataset contains and so define what data an IEC 61850 client receiveswith a report.

NOTE: Do not edit the dataset names used in reports. Changing or deleting any of those dataset names causes a failure in generating the corresponding report.

Supplemental Software

Examine the data structure and value of the supported IEC 61850 LNs with an MMS browser such as MMS Object Explorer and AX-S4 MMS from Sisco, Inc. The settings necessary to browse an SEL-2664S with an MMS browser are as follows:

OSI-PSEL (Presentation Selector)	00000001
OSI-SSEL (Session Selector)	0001
OSI-TSEL (Transport Selector)	0001

Time Stamps and Quality

In addition to the various data values, the two attributes quality and t (time stamp) are available at any time. The relay determines the time stamp when it detects a change in quality or data.

The relay applies a time stamp to all data and quality attributes (Boolean, Bstrings, Analogs, etc.) in the same fashion as when it detects a data or quality change. However, there is a difference in how the relay detects the change

between the different attribute types. For points that are assigned as SER points, i.e., programmed in the SER report, the relay detects the change as the receipt of an SER record (which contains the SER time stamp) within the relay.

For all other Booleans or Bstrings, the relay detects the change via the scanner, which compares the last state against the previous state to detect the change. For analogs, the scanner looks at the amount of change relative to the dead band configured for the point to indicate a change and apply the time stamp. In all cases, the relay uses these time stamps for the reporting model.

Functionally Constrained Data Attributes mapped to points assigned to the SER report have 4 ms SER-accurate time stamps for data change events. To ensure SER-quality time stamps for changes to certain points, you must include those points in the SER report. All other FCDAs are scanned for data changes on a 1/2-second interval and have 1/2-second time-stamp accuracy. See the **SET R** command for information on programming the SER report.

The SEL-2664S uses GOOSE quality attributes to indicate the quality of the data in its transmitted GOOSE messages. Under normal conditions, all attributes are zero, indicating good quality data. *Figure C.3* shows the GOOSE quality attributes available to devices that subscribe to GOOSE messages from SEL-2664S datasets that contain them. Internal status indicators provide the information necessary for the device to set these attributes.

For example, if the device becomes disabled, as shown via status indications (e.g., an internal self-test failure), the SEL-2664S sets the Validity attribute to invalid and the Failure attribute to TRUE. Note that the SEL-2664S does not set any of the other quality attributes. These attributes always indicate FALSE (0). See the Architect online help for additional information on GOOSE quality attributes.

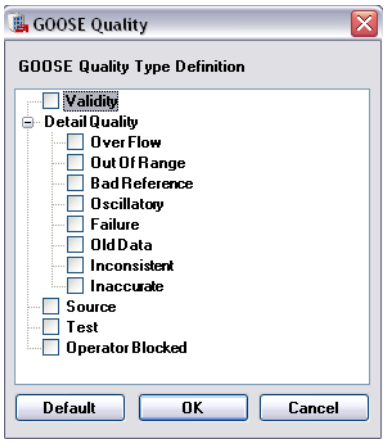

Figure F.3 GOOSE Quality

GOOSE Processing

SEL devices support GOOSE processing as defined by IEC 61850-7-1:2003(E), IEC 61850-7-2:2003(E), and IEC 61850-8-1:2004(E) via the installed Ethernet port. Outgoing GOOSE messages are processed in accordance with the following constraints:

- You can define as many as eight outgoing GOOSE messages consisting of any Data Attribute (DA) from any logical node. You can map a single DA to one or more outgoing GOOSE, or one or more times within the same outgoing GOOSE. You can also map a single GOOSE dataset to multiple GOOSE control blocks.
- The SEL-2664S transmits all configured GOOSE immediately upon successful initialization. If a GOOSE is not retriggered, then, following initial transmission, the SEL-2664S retransmits that GOOSE on a curve. The curve begins at 10 ms and doubles for each retransmission until leveling at the maximum specified in the CID file for that GOOSE. For example, a message with a maximum retransmit interval of 100 ms is retransmitted at intervals of 10 ms, 20 ms, 40 ms, 80 ms, and 100 ms, then repeated every 100 ms until a trigger causes the transmission sequence to be repeated. The time-to-live reported in each transmitted message, is three times the current interval, or two times the interval, if the maximum time-to-live has been reached (30 ms, 60 ms, 120 ms, 240 ms, and 200 ms for the previous example; see IEC 61850-8-1, sec. 18.1).
- GOOSE transmission is squelched (silenced) after a permanent (latching) self-test failure.
- Each outgoing GOOSE includes communications parameters (VLAN, Priority, and Multicast Address) and transmits entirely in a single network frame.
- The SEL-2664S maintains the configuration of outgoing GOOSE through a power cycle and device reset.

Incoming GOOSE messages are processed in accordance with the following constraints:

- You can configure the SEL-2664S to subscribe to as many as 16 incoming GOOSE messages.

  The SEL-2664S recognizes incoming GOOSE messages as valid based on the following content. Any GOOSE message that fails these checks is rejected.

  - Source broadcast MAC address
  - Dataset Reference
  - Application ID
  - GOOSE Control Reference
- Rejection of all DA contained in an incoming GOOSE is based on the accumulation of the following error indications created by inspection of the received GOOSE:
  - **Configuration Mismatch**: the configuration number of the incoming GOOSE changes.
  - **Needs Commissioning**: this Boolean parameter of the incoming GOOSE is true.

- ➢ **Test Mode**: this Boolean parameter of the incoming GOOSE is true.
- ➢ **Decode Error**: the format of the incoming GOOSE is not as configured.

➤ The SEL-2664S discards incoming GOOSE under the following conditions:

- ➢ after a permanent (latching) self-test failure
- ➢ when the relay is disabled
- ➢ when EGSE is set to No

Link-layered priority tagging and virtual LAN is supported as described in Annex C of IEC 61850-8-1:2004(E).

IEC 61850 Configuration

Settings

Table F.6 lists IEC 61850 settings. IEC 61850 settings are only available if your device includes the optional IEC 61850 protocol.

Table F.6 IEC 61850 Settings

Label	Description	Range	Default
E61850	IEC 61850 interface enable	Y, N	N
EGSE	Outgoing IEC 61850 GSE message enable	Y[a], N	N

[a] Requires E61850 set to Y to send IEC 61850 GSE messages.

Configure all other IEC 61850 settings, including subscriptions to incoming GOOSE messages, with Architect.

ACSELERATOR Architect

The ACSELERATOR Architect software enables protection and integration engineers to design and commission IEC 61850 substations containing SEL IEDs.

Engineers can use Architect to:

- ➤ Organize and configure all SEL IEDs in a substation project
- ➤ Configure incoming and outgoing GOOSE messages
- ➤ Read non-SEL IED Capability Description (ICD) and Configured IED Description (CID) files and determine the available IEC 61850 messaging options
- ➤ Load device settings and IEC 61850 CID files into SEL IEDs
- ➤ Generate ICD files that provide SEL IED descriptions to other manufacturer's tools so they can use SEL GOOSE messages and reporting features
- ➤ Configure protection, logic, control, and communications settings of all SEL IEDs in the substation

Architect provides a GUI for engineers to select, edit, and create IEC 61850 GOOSE messages important for substation protection, coordination, and control schemes. Typically, the engineer first places icons representing IEDs in a substa-

tion container, then edits the outgoing GOOSE messages or creates new ones for each IED. The engineer can also select incoming GOOSE messages for each IED to receive from any other IEDs in the domain. Architect can read ICD and CID files from other manufacturers, enabling the engineer to map the data seamlessly into SEL IED logic. See the Architect Instruction Manual or online help for more information.

SEL ICD File Versions

ACSELERATOR Architect version R.1.1.69.0 and later supports multiple ICD file versions for each type of IED in a project. Relays with different firmware versions can require different CID file versions, so you can manage the CID files of all IEDs within a single project.

Ensure that you work with the appropriate version of Architect relative to your current configuration, existing project files, and ultimate goals. If you want the best available IEC 61850 functionality for your SEL relay, obtain the latest version of Architect and select the appropriate ICD version(s) for your needs. As of this writing, Architect comes with one version of the SEL-2664S ICD file for use with new or existing projects.

Logical Nodes

The following tables, *Table F.7* through *Table F.11*, show the Logical Nodes (LN) supported in the SEL-2664S and the associated Relay Word bits or measured quantities. *Table F.7* shows the LN associated with protection elements defined as Logical Device PRO.

Table F.7 Logical Device: PRO (Protection) (Sheet 1 of 2)

Logical Node	Attribute	Data Source	Comment
Functional Constraint = DC			
DevIDLPHD1	PhyNam.model	PARTNO	Part number
Functional Constraint = ST			
F1PTOC3	Op.general	64F1T	Level 1, 64F delayed pickup
F1PTOC3	Str.general	64F1	Level 1, 64F zero Setting delay pickup
F1PTOC3	Str.dirGeneral	unknown	Direction undefined
F2PTOC4	Op.general	64F2T	Level 2, 64F delayed pickup
F2PTOC4	Str.general	64F2	Level 2, 64F zero setting delay pickup
F2PTOC4	Str.dirGeneral	unknown	Direction undefined
N1PTOV1	Op.general	59N1T	59N1 element delayed pickup
N1PTOV1	Str.general	59N1	59N1 element instantaneous pickup
N1PTOV1	Str.dirGeneral	unknown	Direction undefined
NRPTOV2	Op.general	59NRMST	59NRMS element delayed pickup
NRPTOV2	Str.general	59NRMS	59NRMS element instantaneous pickup
NRPTOV2	Str.dirGeneral	unknown	Direction undefined
S1PTOC1	Op.general	64S1T	64S element Level 1 delayed pickup
S1PTOC1	Str.general	64S1	64S element Level 1 instantaneous pickup
S1PTOC1	Str.dirGeneral	unknown	Direction undefined
S2PTOC2	Op.general	64S2T	64S element Level 2 delayed pickup

Table F.7 Logical Device: PRO (Protection) (Sheet 2 of 2)

Logical Node	Attribute	Data Source	Comment
S2PTOC2	Str.general	64S2	64S element Level 2 instantaneous pickup
S2PTOC2	Str.dirGeneral	unknown	Direction undefined
TRIPPTRC1	Tr.general	TRIP	Output of trip logic

Table F.8 shows the LN associated with measuring elements defined as Logical Device MET.

Table F.8 Logical Device: MET (Metering)

Logical Node	Attribute	Data Source	Comment
Functional Constraint = DC			
DevIDLPHD1	PhyNam.model	PARTNO	Part number
Functional Constraint = MX[a]			
METMMXN1	Amp01.instMag.f	I_SRC	Injected rms current
METMMXN1	Amp02.instMag.f	IN_RMS	Neutral rms current
METMMXN1	Amp03.instMag.f	INF1_MAG	15 Hz (FNOM = 50 Hz)/18 Hz (FNOM = 60 Hz) neutral currents
METMMXN1	Amp04.instMag.f	INF2_MAG	20 Hz (FNOM = 50 Hz)/24 Hz (FNOM = 60 Hz) neutral currents
METMMXN1	Amp05.instMag.f	INF3_MAG	30 Hz (FNOM = 50 Hz)/36 Hz (FNOM = 60 Hz) neutral currents
METMMXN1	Amp06.instMag.f	INF4_MAG	40 Hz (FNOM = 50 Hz)/48 Hz (FNOM = 60 Hz) neutral currents
METMMXN1	Vol01.instMag.f	VN_RMS	Neutral rms voltage
METMMXN1	Vol02.instMag.f	VN1_MAG	Fundamental neutral voltage
METMMXN1	Vol03.instMag.f	VN3_MAG	Third-harmonic neutral voltage
METMMXN1	Vol04.instMag.f	VNF1_MAG	15 Hz (FNOM = 50 Hz)/18 Hz (FNOM = 60 Hz) injected voltages
METMMXN1	Vol05.instMag.f	VNF2_MAG	20 Hz (FNOM = 50 Hz)/24 Hz (FNOM = 60 Hz) injected voltages
METMMXN1	Vol06.instMag.f	VNF3_MAG	30 Hz (FNOM = 50 Hz)/36 Hz (FNOM = 60 Hz) injected voltages
METMMXN1	Vol07.instMag.f	VNF4_MAG	40 Hz (FNOM = 50 Hz)/48 Hz (FNOM = 60 Hz) injected voltages

[a] MX values contain instantaneous attributes (instMag and instCVal), which are updated whenever the source updates and other attributes which are only updated when the source goes outside the data source's dead band (mag and cVal). Only the instantaneous values are shown in the table.

Table F.9 shows the LN associated with control elements defined as Logical Device CON.

Table F.9 Logical Device: CON (Remote Control)

Logical Node	Status	Control	Relay Word Bit	Comment
RBGGIO1	SPCSO01.stVal–SPCSO08.stVal	SPCSO01.Oper.ctlVal–SPCSO08.Oper.ctlVal	RB01–RB08	Remote Bits RB01–RB08

Table F.10 shows the LN associated with annunciation elements defined as Logical Device ANN.

Table F.10 Logical Device: ANN (Annunciation) (Sheet 1 of 2)

Logical Node	Attribute	Data Source	Comment
Functional Constraint = DC			
DevIDLPHD1	PhyNam.model	PARTNO	Part number
Functional Constraint = MX			
MVGGIO17	AnIn01.instMag.f–AnIn08.instMag.f	MV01–MV08[a]	Math Variables (MV01–MV08)
RESGGIO16	AnIn01.instMag.f	INS_RES	Stator insulation resistance
RESGGIO16	AnIn02.instMag.f	INS_CAP	Stator insulation capacitance
RESGGIO16	AnIn03.instMag.f	MES_NGR	Neutral ground resistance
RESGGIO16	AnIn04.instMag.f	FLDRES	Field insulation resistance
RESGGIO16	AnIn05.instMag.f	INS_RES1	15 Hz (FNOM = 50Hz)/18 Hz (FNOM = 60 Hz) stator insulation
RESGGIO16	AnIn06.instMag.f	INS_RES2	20 Hz (FNOM = 50Hz)/24 Hz (FNOM = 60 Hz) stator insulation
RESGGIO16	AnIn07.instMag.f	INS_RES3	30 Hz (FNOM = 50Hz)/36 Hz (FNOM = 60 Hz) stator insulation
RESGGIO16	AnIn08.instMag.f	INS_RES4	40 Hz (FNOM = 50Hz)/48 Hz (FNOM = 60 Hz) stator insulation
SCGGIO18	AnIn01.instMag.f–AnIn08.instMag.f	SC01–SC08[b]	SELOGIC Counters (SC01–SC08)
Functional Constraint = ST			
AMPGGIO7	Ind01.stVal	AMP_ON	Amplifier turned ON
AMPGGIO7	Ind02.stVal	AMP_LO	Amplifier locked out
AMPGGIO7	Ind03.stVal	SHUTDOWN	Amplifier shutdown by H/W protection
AMPGGIO7	Ind04.stVal	EN_RETRY	Amplifier retry enabled
AMPGGIO7	Ind05.stVal	CNT_FULL	Amplifier retry counter full
AMPGGIO7	Ind06.stVal	DCSW_STS	Amplifier dc switch status open
AMPGGIO7	Ind07.stVal	OUT_OPEN	Amplifier output open (voltage clipped)
AMPGGIO7	Ind08.stVal	0	Reserved for future use
INGGIO1	Ind01.stVal–Ind02.stVal	IN01–IN02	Digital Inputs IN01–IN02
LEDGGIO6	Ind01.stVal	ENABLED	Enable LED
LEDGGIO6	Ind02.stVal	TRIP_LED	Trip LED
LEDGGIO6	Ind03.stVal	WARN_LED	Warning LED
LEDGGIO6	Ind04.stVal	64S_LED	64S LED
LEDGGIO6	Ind05.stVal	64F_LED	64F LED
LEDGGIO6	Ind06.stVal	59N_LED	59N LED
LEDGGIO6	Ind07.stVal	FGM_LED	Field Ground Module LED
LEDGGIO6	Ind08.stVal	INJ_LED	64S Injection ON LED
LTGGIO5	Ind01.stVal–Ind08.stVal	LT01–LT08[c]	Latch Bits (LT01–LT08)
MBOKGGIO14	Ind01.stVal	ROKA	Channel A, received data OK
MBOKGGIO14	Ind02.stVal	RBADA	Channel A, outage duration over threshold
MBOKGGIO14	Ind03.stVal	CBADA	Channel A, channel unavailability over threshold
MBOKGGIO14	Ind04.stVal	LBOKA	Channel A, looped back OK
MBOKGGIO14	Ind05.stVal	ROKB	Channel B, received data OK
MBOKGGIO14	Ind06.stVal	RBADB	Channel B, outage duration over threshold
MBOKGGIO14	Ind07.stVal	CBADB	Channel B, channel unavailability over threshold
MBOKGGIO14	Ind08.stVal	LBOKB	Channel B, looped back OK

Table F.10 Logical Device: ANN (Annunciation) (Sheet 2 of 2)

Logical Node	Attribute	Data Source	Comment
MISCGGIO9	Ind01.stVal	HALARM	Indication of a diagnostic failure or warning that warrants an ALARM
MISCGGIO9	Ind02.stVal	SALARM	Indication of software or user activity that warrants an ALARM
MISCGGIO9	Ind03.stVal	WARNING	Relay Word WARNING
MISCGGIO9	Ind04.stVal	IRIGOK	IRIG-B time synchronization input data are valid
MISCGGIO9	Ind05.stVal	TSOK	Time synchronization OK
MISCGGIO9	Ind06.stVal	DST	Daylight-saving time active
MISCGGIO9	Ind07.stVal	LINKA	Asserts when a valid link is detected on Port 1A
MISCGGIO9	Ind08.stVal	LINKB	Asserts when a valid link is detected on Port 1B
MISCGGIO9	Ind09.stVal	LINKFAIL	Asserts when a valid link is not detected on the active port(s)
MISCGGIO9	Ind10.stVal	PASEL	Asserts when Port 1A is active
MISCGGIO9	Ind11.stVal	PBSEL	Asserts when Port 1B is active
MISCGGIO9	Ind12.stVal	MATHERR	Asserts on SELOGIC math computation errors
MISCGGIO9	Ind13.stVal–Ind16.stVal	0	Reserved for future use
OUTGGIO2	Ind01.stVal–Ind04.stVal	OUT01–OUT04	Digital Outputs OUT01–OUT04
PROGGIO8	Ind01.stVal	59N1TC	59N1 stator ground torque control SELOGIC control equation
PROGGIO8	Ind02.stVal	59NRMSTC	59NRMS stator ground torque control SELOGIC control equation
PROGGIO8	Ind03.stVal	64F1C	Level 1, 64F instantaneous pickup
PROGGIO8	Ind04.stVal	64F1TC	64F Level 1 field ground torque control SELOGIC control equation
PROGGIO8	Ind05.stVal	64F2C	Level 2, 64F zero setting delay pickup
PROGGIO8	Ind06.stVal	64F2TC	64F Level 2 field ground torque control SELOGIC control equation
PROGGIO8	Ind07.stVal	64FFLT	Indicates a non-functional SEL-2664 or communications failure
PROGGIO8	Ind08.stVal	64S1TC	64S Level 1 stator ground torque control SELOGIC control equation
PROGGIO8	Ind09.stVal	64S2TC	64S Level 2 stator ground torque control SELOGIC control equation
PROGGIO8	Ind10.stVal	NGROPEN	Neutral ground resistor open circuit detected
PROGGIO8	Ind11.stVal	NGRSHORT	Neutral ground resistor short circuit detected
PROGGIO8	Ind12.stVal	ULTRIP	Unlatch (auto reset) trip SELOGIC control equation
PROGGIO8	Ind13.stVal	LOW_ISRC	Injection current low
PROGGIO8	Ind14.stVal	AMP_RAIL	Amplifier power supply rail out of tolerance
PROGGIO8	Ind15.stVal	CTN_OPEN	IN input may be open (IN CBCT current is too low)
PROGGIO8	Ind14.stVal–Ind16.stVal	0	Reserved for future use
RMBAGGIO10	Ind01.stVal–Ind08.stVal	RMB1A–RMB8A	Receive MIRRORED BITS (RMB1A–RMB8A)
RMBBGGIO12	Ind01.stVal–Ind08.stVal	RMB1B–RMB8B	Receive MIRRORED BITS (RMB1B–RMB8B)
SVGGIO3	Ind01.stVal–Ind08.stVal	SV01–SV08[d]	SELOGIC Variables (SV01–SV08)
SVTGGIO4	Ind01.stVal–Ind08.stVal	SV01T–SV08T[d]	SELOGIC Variable Timers (SV01T–SV08T)
TMBAGGIO11	Ind01.stVal–Ind08.stVal	TMB1A–TMB8A	Transmit MIRRORED BITS (TMB1A –TMB8A)
TMBBGGIO13	Ind01.stVal–Ind08.stVal	TMB1B–TMB8B	Transmit MIRRORED BITS (TMB1B–TMB8B)
VBGGIO15	Ind001.stVal–Ind032.stVal	VB001–VB032	Virtual Bits (VB001–VB032)

[a] Active data depends on the EMV setting.
[b] Active data depends on the ESC setting.
[c] Active data depends on the ELAT setting.
[d] Active data depends on the ESV setting.

Table F.11 Logical Device: CFG (Configuration)

Logical Node	Attribute	Data Source	Comment
Functional Constraint = DC			
DevIDLPHD1	PhyNam.model	PARTNO	Part number
DevIDLPHD1	PhyNam.serNum	SER_NUM	Serial number
LLN0	NamPlt.swRev	FID	Firmware revision

Protocol Implementation Conformance Statement

The following tables are as shown in the IEC 61850 standard, Part 8-1, Section 24. Note that because the standard explicitly dictates which services and functions must be implemented to achieve conformance, only the optional services and functions are listed.

Table F.12 PICS for A-Profile Support

Profile		Client	Server	Value/Comment
A1	Client/Server	N	Y	
A2	GOOSE/GSE management	Y	Y	Only GOOSE, not GSSE Management
A3	GSSE	N	N	
A4	Time Sync	N	N	

Table F.13 PICS for T-Profile Support

Profile		Client	Server	Value/Comment
T1	TCP/IP	N	Y	
T2	OSI	N	N	
T3	GOOSE/GSE	Y	Y	Only GOOSE, Not GSSE
T4	GSSE	N	N	
T5	Time Sync	Y	N	

Refer to the ACSI Conformance statements in the Reference Manual for information on the supported services.

MMS Conformance

The Manufacturing Messaging Specification (MMS) stack provides the basis for many IEC 61850 Protocol services. *Table F.14* defines the service support requirement and restrictions of the MMS services in the SEL-700 series products supporting IEC 61850. Generally, only those services whose implementation is not mandatory are shown. Refer to the IEC 61850 standard Part 8-1 for more information.

Table F.14 MMS Service Supported Conformance (Sheet 1 of 2)

MMS Service Supported CBB	Client-CR Supported	Server-CR Supported
status		YES
getNameList		YES
identify		YES
rename		
read		YES
write		YES
getVariableAccessAttributes		YES
defineNamedVariable		
defineScatteredAccess		
getScatteredAccessAttributes		
deleteVariableAccess		
defineNamedVariableList		
getNamedVariableListAttributes		YES
deleteNamedVariableList		
defineNamedType		
getNamedTypeAttributes		
deleteNamedType		
input		
output		
takeControl		
relinquishControl		
defineSemaphore		
deleteSemaphore		
reportPoolSemaphoreStatus		
reportSemaphoreStatus		
initiateDownloadSequence		
downloadSegment		
terminateDownloadSequence		
initiateUploadSequence		
uploadSegment		
terminateUploadSequence		
requestDomainDownload		
requestDomainUpload		
loadDomainContent		
storeDomainContent		
deleteDomain		
getDomainAttributes		YES
createProgramInvocation		
deleteProgramInvocation		
start		
stop		
resume		
reset		
kill		

Table F.14 MMS Service Supported Conformance (Sheet 2 of 2)

MMS Service Supported CBB	Client-CR Supported	Server-CR Supported
getProgramInvocationAttributes		
obtainFile		
defineEventCondition		
deleteEventCondition		
getEventConditionAttributes		
reportEventConditionStatus		
alterEventConditionMonitoring		
triggerEvent		
defineEventAction		
deleteEventAction		
alterEventEnrollment		
reportEventEnrollmentStatus		
getEventEnrollmentAttributes		
acknowledgeEventNotification		
getAlarmSummary		
getAlarmEnrollmentSummary		
readJournal		
writeJournal		
initializeJournal		
reportJournalStatus		
createJournal		
deleteJournal		
fileOpen		
fileRead		
fileClose		
fileRename		
fileDelete		
fileDirectory		
unsolicitedStatus		
informationReport		YES
eventNotification		
attachToEventCondition		
attachToSemaphore		
conclude		YES
cancel		YES
getDataExchangeAttributes		
exchangeData		
defineAccessControlList		
getAccessControlListAttributes		
reportAccessControlledObjects		
deleteAccessControlList		
alterAccessControl		
ReconfigureProgramInvocation		

Table F.15 lists specific settings for the MMS parameter Conformance Building Block (CBB).

Table F.15 MMS Parameter CBB

MMS Parameter CBB	Client-CR Supported	Server-CR Supported
STR1		YES
STR2		YES
VNAM		YES
VADR		YES
VALT		YES
TPY		YES
VLIS		YES
CEI		

The following Variable Access conformance statements are listed in the order specified in the IEC 61850 standard, Part 8-1. Generally, only those services whose implementation is not mandatory are shown. Refer to the IEC 61850 standard Part 8-1 for more information.

Table F.16 Alternate Access Selection Conformance Statement

Alternate Access Selection	Client-CR Supported	Server-CR Supported
accessSelection		YES
component		YES
index		
indexRange		
allElements		
alternateAccess		YES
selectAccess		YES
component		YES
index		
indexRange		
allElements		

Table F.17 VariableAccessSpecification Conformance Statement

VariableAccessSpecification	Client-CR Supported	Server-CR Supported
listOfVariable		YES
variableSpecification		YES
alternateAccess		YES
variableListName		YES

Table F.18 VariableSpecification Conformance Statement

VariableSpecification	Client-CR Supported	Server-CR Supported
name		YES
address		
variableDescription		
scatteredAccessDescription		
invalidated		

Table F.19 Read Conformance Statement

Read	Client-CR Supported	Server-CR Supported
Request		
specificationWithResult		
variableAccessSpecification		
Response		
variableAccessSpecification		YES
listOfAccessResult		YES

Table F.20 GetVariableAccessAttributes Conformance Statement

GetVariableAccessAttributes	Client-CR Supported	Server-CR Supported
Request		
name		
address		
Response		
mmsDeletable		YES
address		
typeSpecification		YES

Table F.21 DefineNamedVariableList Conformance Statement

DefineVariableAccessAttributes	Client-CR Supported	Server-CR Supported
Request		
variableListName		
listOfVariable		
variableSpecification		
alternateAccess		
Response		

Table F.22 GetNamedVariableListAttributes Conformance Statement

GetNamedVariableListAttributes	Client-CR Supported	Server-CR Supported
Request		
ObjectName		
Response		
mmsDeletable		YES
listOfVariable		YES
variableSpecification		YES
alternateAccess		YES

Table F.23 DeleteNamedVariableList (Sheet 1 of 2)

DeleteNamedVariableList	Client-CR Supported	Server-CR Supported
Request		
Scope		
listOfVariableListName		
domainName		

Table F.23 DeleteNamedVariableList (Sheet 2 of 2)

DeleteNamedVariableList	Client-CR Supported	Server-CR Supported
Response		
numberMatched		
numberDeleted		
DeleteNamedVariableList-Error		

GOOSE Services Conformance Statement

Table F.24 GOOSE Conformance

	Subscriber	Publisher	Value/Comment
GOOSE Services	YES	YES	
SendGOOSEMessage		YES	
GetGoReference			
GetGOOSEElementNumber			
GetGoCBValues		YES	
SetGoCBValues			
GSENotSupported			
GOOSE Control Block (GoCB)		YES	

ACSI Conformance Statements

Table F.25 ACSI Basic Conformance Statement

		Client/Subscriber	Server/Publisher	SEL-2664S Support
Client-Server Roles				
B11	Server side (of Two-Party Application Association)	-	cl[a]	YES
B12	Client side (of Two-Party Application Association)	cl[a]	-	
SCMS Supported				
B21	SCSM: IEC 61850-8-1 used			YES
B22	SCSM: IEC 61850-9-1 used			
B23	SCSM: IEC 61850-9-2 used			
B24	SCSM: other			
Generic Substation Event Model (GSE)				
B31	Publisher side	-	O[b]	YES
B32	Subscriber side	O[b]	-	YES
Transmission of Sampled Value Model (SVC)				
B41	Published side	-	O[b]	
B42	Subscriber side	O[b]	-	

[a] c1 shall be mandatory if support for LOGICAL-DEVICE model has been declared.
[b] O = Optional.

Table F.26 ACSI Models Conformance Statement (Sheet 1 of 2)

		Client/Subscriber	Server/Publisher	SEL-2664S Support
If Server Side (B11) Supported				
M1	Logical device	c2[a]	c2[a]	YES
M2	Logical node	c3[b]	c3[b]	YES
M3	Data	c4[c]	c4[c]	YES
M4	Data set	c5[d]	c5[d]	YES
M5	Substation	O[e]	O[e]	
M6	Setting group control	O[e]	O[e]	
Reporting				
M7	Buffered report control	O[e]	O[e]	YES
M7-1	sequence-number			YES
M7-2	report-time-stamp			YES
M7-3	reason-for-inclusion			YES
M7-4	data-set-name			YES
M7-5	data-reference			YES
M7-6	buffer-overflow			YES
M7-7	entryID			YES
M7-8	BufTm			YES
M7-9	IntgPd			YES
M7-10	G1			YES
M8	Unbuffered report control	O[e]	O[e]	YES
M8-1	sequence-number			YES
M8-2	report-time-stamp			YES
M8-3	reason-for-inclusion			YES
M8-4	data-set-name			YES
M8-5	data-reference			YES
M8-6	BufTm			YES
M8-7	IntgPd			YES
M-8-8	GI			YES
Logging				
M9	Log control	O[e]	O[e]	
M9-1	IntgPd	O[e]	O[e]	
M10	Log	O[e]	O[e]	
M11	Control	M[f]	M[f]	YES
If GSE (B31/32) Is Supported				
M12	GOOSE	O[e]	O[e]	YES
M12-1	entryID			YES
M12-2	DataReflnc			YES
M13	GSSE	O[e]	O[e]	

Table F.26 ACSI Models Conformance Statement (Sheet 2 of 2)

		Client/Subscriber	Server/Publisher	SEL-2664S Support
If GSE (B41/42) Is Supported				
M14	Multicast SVC	O[e]	O[e]	
M15	Unicast SVC	O[e]	O[e]	
M16	Time	M[f]	M[f]	
M17	File Transfer	O[e]	O[e]	

[a] c2 shall be M if support for LOGICAL-NODE model has been declared.
[b] c3 shall be M if support for DATA model has been declared.
[c] c4 shall be Mif support for DATA-SET, Substitution, Report, Log Control, or Time model has been declared.
[d] c5 shall be M if support for Report, GSE, or SV models has been declared.
[e] O = Optional.
[f] M = Mandatory.

Table F.27 ACSI Services Conformance Statement (Sheet 1 of 3)

Services		AA: TP/MC	Client/ Subscriber	Service/ Publisher	SEL-2664S Support
Server (Clause 6)					
S1	ServerDirectory	TP		M[a]	YES
Application Association (Clause 7)					
S2	Associate		M[a]	M[a]	YES
S3	Abort		M[a]	M[a]	YES
S4	Release		M[a]	M[a]	YES
Logical Device (Clause 8)					
S5	LogicalDeviceDirectory	TP	M[a]	M[a]	YES
Logical Node (Clause 9)					
S6	LogicalNodeDirectory	TP	M[a]	M[a]	YES
S7	GetAllDataValues	TP	O[b]	M[a]	YES
Data (Clause 10)					
S8	GetDataValues	TP	M[a]	M[a]	YES
S9	SetDataValues	TP	O[b]	O[b]	
S10	GetDataDirectory	TP	O[b]	M[a]	YES
S11	GetDataDefinition	TP	O[b]	M[a]	YES
Data Set (Clause 11)					
S12	GetDataSetValues	TP	O[b]	M[a]	YES
S13	SetDataSetValues	TP	O[b]	O[b]	
S14	CreateDataSet	TP	O[b]	O[b]	
S15	DeleteDataSet	TP	O[b]	O[b]	
S16	GetDataSetDirectory	TP	O[b]	O[b]	YES
Substitution (Clause 12)					
S17	SetDataValues	TP	M[a]	M[a]	
Setting Group Control (Clause 13)					
S18	SelectActiveSG	TP	O[b]	O[b]	
S19	SelectEditSG	TP	O[b]	O[b]	
S20	SetSGvalues	TP	O[b]	O[b]	
S21	ConfirmEditSGVal	TP	O[b]	O[b]	
S22	GetSGValues	TP	O[b]	O[b]	

Table F.27 ACSI Services Conformance Statement (Sheet 2 of 3)

Services		AA: TP/MC	Client/ Subscriber	Service/ Publisher	SEL-2664S Support
S23	GetSGCBValues	TP	O[b]	O[b]	
S24	Report	TP	c6[c]	c6[c]	YES
S24-1	data-change (dchg)				YES
S24-2	qchg-change (qchg)				YES
S24-3	data-update (dupd)				
S25	GetBRCBValues	TP	c6[c]	c6[c]	YES
S26	SetBRCBValues	TP	c6[c]	c6[c]	YES
Unbuffered Report Control Block (URCB)					
S27	Report	TP	c6[c]	c6[c]	YES
S27-1	data-change (dchg)				YES
S27-2	qchg-change (qchg)				YES
S27-3	data-update (dupd)				
S28	GetURCBValues	TP	c6[c]	c6[c]	YES
S29	SetURCBValues	TP	c6[c]	c6[c]	YES
Logging (Clause 14)					
Log Control Block					
S30	GetLCBValues	TP	M[a]	M[a]	
S31	SetLCBValues	TP	O[b]	M[a]	
LOG					
S32	QueryLogByTime	TP	c7[d]	M[a]	
S33	QueryLogByEntry	TP	c7[d]	M[a]	
S34	GetLogStatusValues	TP	M[a]	M[a]	
Generic Substation Event Model (GSE) (Clause 14.3.5.3.4)					
GOOSE-Control-Block					
S35	SendGOOSEMessage	MC	c8[e]	c8[e]	YES
S36	GetReference	TP	O[b]	c9[f]	
S37	GetGOOSEElement				
Number	TP	O[b]	c9[f]		
S38	GetGoCBValues	TP	O[b]	O[b]	YES
S39	SetGoCBValues	TP	O[b]	O[b]	
ONLY					
GSSE-Control-Block					
S40	SendGSSEMessage	MC	c8[e]	c8[e]	
S41	GetReference	TP	O[b]	c9[f]	
S42	GetGSSEElement				
Number	TP	Ob	c9[f]		
S43	GetGsCBValues	TP	O[b]	O[b]	
S44	GetGsCBValues	TP	O[b]	O[b]	
Transmission of Sample Value Model (SVC) (Clause 16)					
Multicast SVC					
S45	SendMSVMessage	MC	c10[g]	c10[g]	
S46	GetMSVCBValues	TP	O[b]	O[b]	
S47	SetMSVCBValues	TP	O[b]	O[b]	

Table F.27 ACSI Services Conformance Statement (Sheet 3 of 3)

Services		AA: TP/MC	Client/ Subscriber	Service/ Publisher	SEL-2664S Support
Unicast SVC					
S48	SendUSVMessage	MC	c10[g]	c10[g]	
S49	GetUSVCBValues	TP	O[b]	O[b]	
S50	SetUSVCBValues	TP	O[b]	O[b]	
Control (Clause 16.4.8)					
S51	Select		M[a]	O[b]	
S52	SelectWithValue	TP	Ma	O[b]	YES
S53	Cancel	TP	O[b]	M[a]	YES
S54	Operate	TP	M[a]	M[a]	YES
S55	Command-Termination	TP	M[a]	M[a]	YES
S56	TimeActivated-Operate	TP	O[b]	O[b]	
File Transfer (Clause 20)					
S57	GetFile	TP	O[b]	M[a]	
S58	SetFile	TP	O[b]	O[b]	
S59	DeleteFile	TP	O[b]	O[b]	
S60	GetFileAttributeValues	TP	O[b]	M[a]	
Time (Clause 5.5)					
T1	Time resolution of internal clock (nearest negative power of 2 in seconds)				20 (1 µs)
T2	Time accuracy of internal clock				7 (10 ms) for SNTP 18 (4 µs) for IRIG-B
	T1				YES (for IRIG-B)
	T2				YES (for IRIG-B)
	T3				YES (for IRIG-B)
	T4				YES (for IRIG-B)
T3	Supported time stamp resolution (nearest negative power of 2 in seconds)				7 (10 ms) for SNTP 18 (4 µs) for IRIG-B

[a] M = Mandatory.
[b] O = Optional.
[c] c6 shall declare support for at least one (BRCB or URCB).
[d] c7 shall declare support for at least one (QueryLogByTime or QueryLogAfter).
[e] c8 shall declare support for at least one (SendGOOSEMessage or SendGSSEMessage).
[f] c9 shall declare support if TP association is available.
[g] c10 shall declare support for at least one (SendMSVMessage or SendUSVMessage).

This page intentionally left blank

APPENDIX G

MIRRORED BITS Communications

Overview

MIRRORED BITS® communication is a direct SEL-2664S-to-SEL-2664S communications protocol that allows IEDs to exchange information quickly, securely, and with minimal expense. Use MIRRORED BITS for functions such as remote control and remote sensing. The SEL-2664S supports two MIRRORED BITS communications channels, designated A and B. Use the port setting PROTO to assign one of the MIRRORED BITS communications channels to a serial port; PROTO:=MBA for MIRRORED BITS communications Channel A or PROTO:=MBB for MIRRORED BITS communications Channel B. MIRRORED BITS are either Transmit MIRRORED BITS (TMB) or Received MIRRORED BITS (RMB). Transmit MIRRORED BITS include TMB1A–TMB8A (channel A) and TMB1B–TMB8B (channel B). Received bits include RMB1A–RMB8A and RMB1B–RMB8B.

IMPORTANT: Be sure to configure the port before connecting to a MIRRORED BITS device. If you connect an unconfigured port to a MIRRORED BITS device, the device will appear to be locked up.

Control the transmit MIRRORED BITS with SELOGIC® control equations. Use the received MIRRORED BITS as arguments in SELOGIC control equations. The channel status bits are ROKA, RBADA, CBADA, LBOKA, ROKB, RBADB, CBADB, and LBOKB. You can also use these channel status bits as arguments in SELOGIC control equations. Use the **COM** command (see the *SEL-2664S Command Summary*) for additional channel status information.

NOTE: Complete all of the port settings for a port that you use for MIRRORED BITS communications before you connect an external MIRRORED BITS communications device. If you connect a MIRRORED BITS communications device to a port that is not set for MIRRORED BITS communications operation, the port will be continuously busy.

Because of different applications, the SEL product range supports several variations of the MIRRORED BITS communications protocol. Through the Port settings, you can set the SEL-2664S for compatible operation with SEL-300 series devices, SEL-2505 Remote I/O Modules (ST® option only), SEL-700 series devices, and SEL-2100 Logic Processors. When communicating with an SEL-400 series relay, be sure to set the transmission mode setting in the SEL-400 series relay to paced transmission (TXMODE := P).

Operation

Message Transmission

In the SEL-2664S, the MIRRORED BITS transmission rate is a function of both the baud rate and the power system cycle. At baud rates lower than 9600, the SEL-2664S transmits MIRRORED BITS as fast as possible for the given baud. At rates at and higher than 9600 baud the SEL-2664S self-paces, using a technique similar to the SEL-400 series pacing mode. There are no settings to enable or disable the self-pacing mode; the SEL-2664S automatically enters the self-pacing mode at baud rates of 9600, 19200, and 38400. *Table G.1* shows the transmission rates of the MIRRORED BITS messages at different baud.

Table G.1 Number of MIRRORED BITS Messages for Different Baud

Baud Rate	Transmission Rate of MIRRORED BITS Packets
2400	15 ms
4800	7.5 ms
9600	4 times a power system cycle (automatic pacing mode)
19200	4 times a power system cycle (automatic pacing mode)
38400	4 times a power system cycle (automatic pacing mode)

Transmitting at longer intervals for baud rates higher than 9600 avoids overflowing relays that receive MIRRORED BITS at a slower rate.

Message Reception Overview

During synchronized MIRRORED BITS communications with the communications channel in normal state, the relay decodes and checks each received message. If the message is valid, the relay sends each received logic bit (RMB*n*, where *n* = 1 through 8) to the corresponding pickup and dropout security counters, that in turn set or clear the RMB*n*A and RMB*n*B relay element bits.

Message Decoding and Integrity Checks

Set the RX_ID of the local SEL-2664S to match the TX_ID of the remote SEL-2664S. The SEL-2664S provides indication of the status of each MIRRORED BITS communications channel with Relay Word bits ROKA (receive OK) and ROKB. During normal operation, the relay sets the ROK*c* (*c* = A or B). The relay clears the ROK*c* bit when it detects any of the following conditions.

- The relay is disabled
- MIRRORED BITS are not enabled
- Parity, framing, or overrun errors
- Receive message identification error
- No message received in the time three messages have been sent when PROTO = MB*c*, or seven messages have been sent when PROTO = MB8*c*
- Loopback is enabled

The relay asserts ROK*c* only after successful synchronization, as described below, and after two consecutive messages pass all of the data checks previously described. After ROK*c* is reasserted, received data can be delayed while passing through the security counters described below.

While ROK*c* is deasserted, the relay does not transfer new RMB data to the pickup-dropout security counters described below. Instead, the relay sends one of the user-definable default values to the security counter inputs. For each RMB*n*, use the RXDFLT setting to determine the default state the MIRRORED BITS should use in place of received data if an error condition is detected. The setting is a mask of 1s, 0s, and/or Xs (for RMB1A–RMB8A), where X represents the most recently received valid value. The positions of the 1s and 0s correspond to the respective positions of the MIRRORED BITS in the Relay Word bits (see *Appendix H: Relay Word Bits*). *Table G.2* is an extract of *Appendix H: Relay Word Bits*, showing the positions of the MIRRORED BITS.

Table G.2 Positions of the MIRRORED BITS

Bit/ Row	7	6	5	4	3	2	1	0
27	RMB8A	RMB7A	RMB6A	RMB5A	RMB4A	RMB3A	RMB2A	RMB1A
29	RMB8B	RMB7B	RMB6B	RMB5B	RMB4B	RMB3B	RMB2B	RMB1B

Table G.3 shows an example of the values of the MIRRORED BITS for a RXDFLT setting of 10100111.

Table G.3 MIRRORED BITS Values for a RXDFLT Setting of 10100111

Bit/ Row	7	6	5	4	3	2	1	0
27	1	0	1	0	0	1	1	1

Individual pickup and dropout security counters supervise the movement of each received data bit into the corresponding RMB*n* element. You can set each pickup/dropout security counter from 1 to 8. A setting of 1 causes a security counter to pass every occurrence, while a setting of 8 causes a counter to wait for eight consecutive occurrences in the received data before updating the data bits. The pickup and dropout security count settings are separate. Control the security count settings with the settings RMB*n*PU and RMB*n*DO.

A pickup/dropout security counter operates identically to a pickup/dropout timer, except that the counter uses units of counted received messages instead of time. Select a setting for the security counter in accordance with the transmission rate (see *Table G.1*). For example, when transmitting at 2400 baud, a security counter set to 2 counts delays a bit by about 30 ms. However, when operating at 9600 baud, a setting of 2 counts delays a bit by about 8.5 ms.

You must consider the impact of the security counter settings in the receiving relay to determine the channel timing performance, particularly when two relays of different processing rates are communicating via MIRRORED BITS, such as an SEL-321 and an SEL-2664S. The SEL-321 processes power system information each 1/8 power system cycle, but, when transmitting at 19200 baud, the SEL-2664S processes MIRRORED BITS messages at 4.15 ms at 60 Hz (4 times a power system cycle at 60 Hz). Although the SEL-321 processes power system information each 1/8 power system cycle, the relay processes the MIRRORED BITS pickup/dropout security counters as MIRRORED BITS messages are received. Because the SEL-2664S transmits messages at an approximately 1/4-cycle processing interval (9600 baud and faster, see *Table G.1*), a counter set to two in the SEL-321 delays a received bit by another approximately 1/2 cycle. However, a security counter in the SEL-2664S with a setting of two, delays a received bit from the SEL-321 by 1/4 cycle, because the SEL-2664S is receiving new MIRRORED BITS messages each 1/8 cycle from the SEL-321.

Channel Synchronization

When an SEL-2664S detects a communications error, it deasserts ROKA or ROKB. If an SEL-2664S detects two consecutive communications errors, it transmits an attention message, which includes the TXID setting. The relay transmits an attention message until it receives an attention message that includes a match to the TXID setting value. If the attention message is successful, the relay has properly synchronized and data transmission resumes. If the attention message is not successful, the relay repeats the attention message until it is successful.

In summary, when a relay detects an error, it transmits an attention message until it receives an attention message with its own TX_ID included. If three or four relays are connected in a ring topology, the attention message will go all the way around the loop until the originating relay receives it. The message then dies and data transmission resumes. This method of synchronization allows the relays to reliably determine which byte is the first byte of the message. It also forces unsynchronized UARTs to become resynchronized. On the downside, this method takes down the entire loop for a receive error at any relay in the loop. This decreases availability and also makes one-way communication impossible.

Loopback Testing

Use the **LOOP** command to enable loopback testing. In the loopback mode, you loop the transmit port to the receive port of the same relay to verify transmission messages. While in loopback mode, ROK*c* is deasserted, and another user accessible Relay Word bit, LBOK*c* (Loop Back OK) asserts and deasserts based on the received data checks (see the for the ACSII commands).

Channel Monitoring

Based on the results of data checks (previously described), the relay collects information regarding the 255 most recent communications errors. Each record contains at least the following fields:

- DATE—Date when the dropout occurred
- TIME—Time when the dropout occurred
- RECOVERY_DATE—Date when the channel returned to service (if the channel is currently failed, it is displayed and included in the calculations, as if its recovery were to occur at the time the report was requested)
- RECOVERY_TIME—Time when the channel returned to service (if the channel is currently failed, it is displayed and included in the calculations, as if its recovery were to occur at the time the report was requested)
- DURATION—Time elapsed during dropout
- CAUSE—Reason for dropout (see *Message Decoding and Integrity Checks* on page G.2)

There is a single record for each outage, but an outage can evolve. For example, the initial cause could be a data disagreement, but framing errors can extend the outage. If the channel is currently failed, it is displayed and included in the calculations, as if its recovery were to occur at the time the report was requested.

Combine error conditions including RBADA, RBADB, CBADA, and CBADB with other alarm conditions using SELOGIC control equations. You can use these alarm conditions to program the relay to take appropriate action when it detects a communications channel failure.

When the duration of an outage on Channel A or B exceeds a user-definable threshold, the relay asserts a user-accessible Relay Word bit, RBADA or RBADB. When channel unavailability exceeds a user-definable threshold for Channel A or B, the relay asserts a user-accessible Relay Word bit, CBADA or CBADB. Use the **COMM** command to generate a long or summary report of the communications errors.

Use the RBADPU setting to determine how long a channel error must last before the meter element RBADA is asserted. RBADA is deasserted when the channel error is corrected. RBADPU is accurate to ±1 second.

Use the CBADPU setting to determine the ratio of channel downtime to the total channel time before the meter element CBADA is asserted. The times used in the calculation are those that are available in the COM records. See the *COMMUNICATIONS Command* in *Section 7: Communications* for more information.

MIRRORED BITS Protocol for the Pulsar 9600 Baud Modem

To use a Pulsar MBT modem, set setting PROTO := MBTA or MBTB (Port settings). Setting PROTO := MBTA or MBTB hides setting SPEED (forces the baud to 9600), hides setting PARITY (forces parity to a value of 0), hides setting RTSCTS (forces RTSCTS to a value of N), and forces the transmit time to be faster than double the power system cycle. *Table G.4* shows the difference in message transmission periods when not using the Pulsar modem (PROTO ≠ MBTA or MBTB), and using the Pulsar MBT modem (PROTO = MBTA or MBTB).

NOTE: You must consider the idle time in calculations of data transfer latency through a Pulsar MBT modem system.

Table G.4 MIRRORED BITS Communications Message Transmission Period

Baud	PROTO ≠ MBTA or MBTB	PROTO = MBTA or MBTB
38400	4 times a power system cycle	n/a
19200	4 times a power system cycle	n/a
9600	4 times a power system cycle	2 times a power system cycle
4800	7.5 ms	n/a

The relay sets RTS to a negative voltage at the EIA-232 connector to signify that MIRRORED BITS communications matches this specification.

Settings

Set PROTO = MBA or MB8A to enable the MIRRORED BITS protocol channel A on this port. Set PROTO = MBB or MB8B to enable the MIRRORED BITS protocol channel B on this port. The standard MIRRORED BITS protocols MBA and MBB use a 6-data bit format for data encoding. The MB8 protocols MB8A and MB8B use an 8-data bit format, which allows MIRRORED BITS to operate on communications channels requiring an 8-data bit format. For the remainder of this section, PROTO = MBA is assumed. *Table G.5* shows the MIRRORED BITS protocol port settings, ranges, and default settings for Port F, Port 3, and Port 4.

Table G.5 MIRRORED BITS Protocol Settings (Sheet 1 of 2)

Setting Prompt	Setting Description	Factory-Default Settings
TXID	MIRRORED BITS ID of This Device (1–4)	2
RXID	MIRRORED BITS ID of Device Receiving From (1–4)	1
RBADPU	Outage Duration to Set RBAD (0–10000 seconds)	60
CBADPU	Channel Unavailability to Set CBAD (1–10000 ppm)	1000
RXDFLT	8 char string of 1s, 0s, or Xs	XXXXXXXX
RMB1PU	RMB1 Pickup Debounce Messages (1–8 messages)	1

Table G.5 Mirrored Bits Protocol Settings (Sheet 2 of 2)

Setting Prompt	Setting Description	Factory-Default Settings
RMB1DO	RMB1 Dropout Debounce Messages (1–8 messages)	1
RMB2PU	RMB2 Pickup Debounce Messages (1–8 messages)	1
RMB2DO	RMB2 Dropout Debounce Messages (1–8 messages)	1
RMB3PU	RMB3 Pickup Debounce Messages (1–8 messages)	1
RMB3DO	RMB3 Dropout Debounce Messages (1–8 messages)	1
RMB4PU	RMB4 Pickup Debounce Messages (1–8 messages)	1
RMB4DO	RMB4 Dropout Debounce Messages (1–8 messages)	1
RMB5PU	RMB5 Pickup Debounce Messages (1–8 messages)	1
RMB5DO	RMB5 Dropout Debounce Messages (1–8 messages)	1
RMB6PU	RMB6 Pickup Debounce Messages (1–8 messages)	1
RMB6DO	RMB6 Dropout Debounce Messages (1–8 messages)	1
RMB7PU	RMB7 Pickup Debounce Messages (1–8 messages)	1
RMB7DO	RMB7 Dropout Debounce Messages (1–8 messages)	1
RMB8PU	RMB8 Pickup Debounce Messages (1–8 messages)	1
RMB8DO	RMB8 Dropout Debounce Messages (1–8 messages)	1

APPENDIX H

Relay Word Bits

Overview

The protection and control element results are represented by Relay Word bits in the SEL-2664S. Each Relay Word bit has a label name and can be in either of the following states:

- 1 (logical 1)
- 0 (logical 0)

Logical 1 represents an element being picked up or otherwise asserted. Logical 0 represents an element being dropped out or otherwise deasserted.

Table H.1 and *Table H.2* show a list of Relay Word bits and corresponding descriptions. The Relay Word bit row numbers correspond to the row numbers used in the **TAR** command (see *TARGET Command (Display Relay Word Bit Status)* on page 7.35).

Any Relay Word bit (except Row 0) can be used in SELOGIC control equations (see *Section 4: Protection and Logic Functions*) and the Sequential Events Recorder (SER) trigger list settings (see *Section 9: Analyzing Events*).

Table H.1 SEL-2664S Relay Word Bits (Sheet 1 of 2)

Bit/ Row	Relay Word Bits							
	7	6	5	4	3	2	1	0
TAR 0	ENABLED	TRIP_LED	WARN_LED	64S_LED	64F_LED	59N_LED	FGM_LED	INJ_LED
1	E64S	64S1	64S1T	64S2	64S2T	AMP_ON	AMP_LO	SHUTDOWN
2	EN_RETRY	CNT_FULL	DCSW_STS	OUT_OPEN	59N1	59N1T	59NRMS	59NRMST
3	64F1C	64F1	64F1T	64F2C	64F2	64F2T	64FFLT	VN3HIGH
4	TRIP	TR	ULTRIP	TRGTR	*	*	*	*
5	NGRSHORT	NGROPEN	LOW_ISRC	AMP_RAIL	CTN_OPEN	IN_CLIP	*	*
6	IN01	IN02	*	*	*	P_LOGIC1	P_LOGIC2	VFD_STRT
7	*	*	*	*	OUT04	OUT03	OUT02	OUT01
8	RELAY_EN	*	WARNING	*	*	TESTDB	*	*
9	ER	*	RSTTRGT	*	*	*	*	*
10	64S1TC	64S2TC	59N1TC	59NRMSTC	64F1TC	64F2TC	*	*
11	LT01	LT02	LT03	LT04	LT05	LT06	LT07	LT08
12	SV01	SV02	SV03	SV04	SV05	SV06	SV07	SV08
13	SV01T	SV02T	SV03T	SV04T	SV05T	SV06T	SV07T	SV08T

Table H.1 SEL-2664S Relay Word Bits (Sheet 2 of 2)

Bit/ Row	Relay Word Bits							
	7	6	5	4	3	2	1	0
14	SC01QU	SC02QU	SC03QU	SC04QU	SC05QU	SC06QU	SC07QU	SC08QU
15	SC01QD	SC02QD	SC03QD	SC04QD	SC05QD	SC06QD	SC07QD	SC08QD
16	RB01	RB02	RB03	RB04	RB05	RB06	RB07	RB08
17	VB001	VB002	VB003	VB004	VB005	VB006	VB007	VB008
18	VB009	VB010	VB011	VB012	VB013	VB014	VB015	VB016
19	VB017	VB018	VB019	VB020	VB021	VB022	VB023	VB024
20	VB025	VB026	VB027	VB028	VB029	VB030	VB031	VB032
21	HALARM	*	*	*	*	*	*	*
22	SALARM	*	*	*	MATHERR	*	*	*
23	*	LINKA	LINKB	LINKFAIL	PASEL	PBSEL	*	*
24	TSOK	DST	DSTP	LPSEC	LPSECP	IRIGOK	*	*
25	TSNTPB	TSNTPP	TUTCS	TUTC1	TUTC2	TUTC4	TUTC8	TUTCH
26	T01_LED	T02_LED	T03_LED	T04_LED	T05_LED	T06_LED	*	*
27	RMB8A	RMB7A	RMB6A	RMB5A	RMB4A	RMB3A	RMB2A	RMB1A
28	TMB8A	TMB7A	TMB6A	TMB5A	TMB4A	TMB3A	TMB2A	TMB1A
29	RMB8B	RMB7B	RMB6B	RMB5B	RMB4B	RMB3B	RMB2B	RMB1B
30	TMB8B	TMB7B	TMB6B	TMB5B	TMB4B	TMB3B	TMB2B	TMB1B
31	LBOKB	CBADB	RBADB	ROKB	LBOKA	CBADA	RBADA	ROKA
32	*	*	*	*	*	*	*	*
33	*	*	*	*	*	*	*	*

* Reserved for future use.

Definitions

Table H.2 Relay Word Bit Definitions for the SEL-2664S (Sheet 1 of 7)

Bit	Bit Description	Row
59N_LED	59N LED	0
59N1	59N1 Element Instantaneous Pickup	2
59N1T	59N1 Element Delayed Pickup	2
59N1TC	59N1 Stator Ground Torque Control SELOGIC control equation	10
59NRMS	59NRMS Element Instantaneous Pickup	2
59NRMST	59NRMS Element Delayed Pickup	2
59NRMSTC	59NRMS Stator Ground Torque Control SELOGIC control equation	10
64F_LED	64F LED	0
64F1	Level 1, 64F Zero Setting Delay Pickup	3

Table H.2 Relay Word Bit Definitions for the SEL-2664S (Sheet 2 of 7)

Bit	Bit Description	Row
64F1C	Level 1, 64F Instantaneous Pickup	3
64F1T	Level 1, 64F Delayed Pickup	3
64F1TC	64F Level 1 Field Ground Torque Control SELOGIC control equation	10
64F2	Level 2, 64F Zero Setting Delay Pickup	3
64F2C	Level 2, 64F Instantaneous Pickup	3
64F2T	Level 2, 64F Delayed Pickup	3
64F2TC	64F Level 2 Field Ground Torque Control SELOGIC control equation	10
64FFLT	Indicates a non-functional SEL-2664 or communications failure	3
64S_LED	64S LED	0
64S1	64S Element Level 1 Instantaneous Pickup	1
64S1T	64S Element Level 1 Delayed Pickup	1
64S1TC	64S Level 1 Stator Ground Torque Control SELOGIC control equation	10
64S2	64S Element Level 2 Instantaneous Pickup	1
64S2T	64S Element Level 2 Delayed Pickup	1
64S2TC	64S Level 2 Stator Ground Torque Control SELOGIC control equation	10
AMP_LO	Amplifier locked out	1
AMP_ON	Amplifier turned on	1
AMP_RAIL	Asserted when amplifier power supply rail is out of tolerance	5
CBADA	MIRRORED BITS Channel A unavailability over threshold	31
CBADB	MIRRORED BITS Channel B unavailability over threshold	31
CNT_FULL	Amplifier retry counter full	2
CTN_OPEN	IN input may be open (IN CBCT current is too low)	5
DCSW_STS	Asserted when amplifier dc switch status is open	2
DST	Asserted during daylight-saving time	24
DSTP	Asserted up to a minute before a daylight-saving time change	24
E64S	64S Elements Enable	1
ENABLED	Enable LED	0
EN_RETRY	Amplifier retry enabled	2
ER	Event Report Trigger SELOGIC control equation	9
FGM_LED	Field Ground Module LED	0
HALARM	Indicates a diagnostic failure or warning that warrants an ALARM	21
IN01	Contact Input IN01	6
IN02	Contact Input IN02	6
IN_CLIP	Neutral current clipping detected (Adc limit)	5
INJ_LED	64S Injection ON LED	0
IRIGOK	IRIG-B time synchronization input data are valid	24
LBOKA	Loop back MIRRORED BITS data OK—Channel A	31
LBOKB	Loop back MIRRORED BITS data OK—Channel B	31

Table H.2 Relay Word Bit Definitions for the SEL-2664S (Sheet 3 of 7)

Bit	Bit Description	Row
LINKA	Asserted when a valid link is detected on Ethernet port A	23
LINKB	Asserted when a valid link is detected on Ethernet port B	23
LINKFAIL	Asserted when a valid link is not detected on the active Ethernet port	23
LOW_ISRC	Asserted when the measured injection current, I_SRC < 0.75 • I_SRC setting	5
LPSEC	Leap Second Polarity—Adds if deasserted, deletes if asserted	24
LPSECP	Leap Second Pending—Asserted up to a minute prior to leap second insertion	24
LT01	Latch Bit LT01 Asserted	11
LT02	Latch Bit LT02 Asserted	11
LT03	Latch Bit LT03 Asserted	11
LT04	Latch Bit LT04 Asserted	11
LT05	Latch Bit LT05 Asserted	11
LT06	Latch Bit LT06 Asserted	11
LT07	Latch Bit LT07 Asserted	11
LT08	Latch Bit LT08 Asserted	11
MATHERR	Asserted on SELOGIC math computation errors	22
NGROPEN	Detected Neutral Grounding Resistor Open Circuit	5
NGRSHORT	Detected Neutral Grounding Resistor Short Circuit	5
OUT01	Control Equation for Contact Output OUT01	7
OUT02	Control Equation for Contact Output OUT02	7
OUT03	Control Equation for Contact Output OUT03	7
OUT04	Control Equation for Contact Output OUT04	7
OUT_OPEN	Asserted when amplifier output is open (voltage clipped)	2
P_LOGIC1	Parallel MODE Logic Bit1 asserted	6
P_LOGIC2	Parallel MODE Logic Bit2 asserted	6
PASEL	Asserted when Ethernet port A is active	23
PBSEL	Asserted when Ethernet port B is active	23
RB01	Remote Bit RB01 Asserted	16
RB02	Remote Bit RB02 Asserted	16
RB03	Remote Bit RB03 Asserted	16
RB04	Remote Bit RB04 Asserted	16
RB05	Remote Bit RB05 Asserted	16
RB06	Remote Bit RB06 Asserted	16
RB07	Remote Bit RB07 Asserted	16
RB08	Remote Bit RB08 Asserted	16
RBADA	MIRRORED BITS Channel A outage duration over threshold	31
RBADB	MIRRORED BITS Channel B outage duration over threshold	31
RELAY_EN	Relay Data Quality Flag	8
RMB1A	Channel A received MIRRORED BITS 1	27

Table H.2 Relay Word Bit Definitions for the SEL-2664S (Sheet 4 of 7)

Bit	Bit Description	Row
RMB1B	Channel B received MIRRORED BITS 1	29
RMB2A	Channel A received MIRRORED BITS 2	27
RMB2B	Channel B received MIRRORED BITS 2	29
RMB3A	Channel A received MIRRORED BITS 3	27
RMB3B	Channel B received MIRRORED BITS 3	29
RMB4A	Channel A received MIRRORED BITS 4	27
RMB4B	Channel B received MIRRORED BITS 4	29
RMB5A	Channel A received MIRRORED BITS 5	27
RMB5B	Channel B received MIRRORED BITS 5	29
RMB6A	Channel A received MIRRORED BITS 6	27
RMB6B	Channel B received MIRRORED BITS 6	29
RMB7A	Channel A received MIRRORED BITS 7	27
RMB7B	Channel B received MIRRORED BITS 7	29
RMB8A	Channel A received MIRRORED BITS 8	27
RMB8B	Channel B received MIRRORED BITS 8	29
ROKA	Received MIRRORED BITS data OK—Channel A	31
ROKB	Received MIRRORED BITS data OK—Channel B	31
RSTTRGT	Resets Targets SELOGIC control equation	9
SALARM	Pulses for the following conditions: setting changes, access level changes, password changes, and three unsuccessful password entry attempts	22
SC01QD	SELOGIC Counter SC01 asserted when counter = 0	15
SC01QU	SELOGIC Counter SC01 asserted when counter = preset value	14
SC02QD	SELOGIC Counter SC02 asserted when counter = 0	15
SC02QU	SELOGIC Counter SC02 asserted when counter = preset value	14
SC03QD	SELOGIC Counter SC03 asserted when counter = 0	15
SC03QU	SELOGIC Counter SC03 asserted when counter = preset value	14
SC04QD	SELOGIC Counter SC04 asserted when counter = 0	15
SC04QU	SELOGIC Counter SC04 asserted when counter = preset value	14
SC05QD	SELOGIC Counter SC05 asserted when counter = 0	15
SC05QU	SELOGIC Counter SC05 asserted when counter = preset value	14
SC06QD	SELOGIC Counter SC06 asserted when counter = 0	15
SC06QU	SELOGIC Counter SC06 asserted when counter = preset value	14
SC07QD	SELOGIC Counter SC07 asserted when counter = 0	15
SC07QU	SELOGIC Counter SC07 asserted when counter = preset value	14
SC08QD	SELOGIC Counter SC08 asserted when counter = 0	15
SC08QU	SELOGIC Counter SC08 asserted when counter = preset value	14
SHUTDOWN	Amplifier Shutdown by H/W Protection	1
SV01	SELOGIC control equation variable timer input SV01 asserted	12
SV01T	SELOGIC control equation variable timer output SV01T asserted	13

Table H.2 Relay Word Bit Definitions for the SEL-2664S (Sheet 5 of 7)

Bit	Bit Description	Row
SV02	SELOGIC control equation variable timer input SV02 asserted	12
SV02T	SELOGIC control equation variable timer output SV02T asserted	13
SV03	SELOGIC control equation variable timer input SV03 asserted	12
SV03T	SELOGIC control equation variable timer output SV03T asserted	13
SV04	SELOGIC control equation variable timer input SV04 asserted	12
SV04T	SELOGIC control equation variable timer output SV04T asserted	13
SV05	SELOGIC control equation variable timer input SV05 asserted	12
SV05T	SELOGIC control equation variable timer output SV05T asserted	13
SV06	SELOGIC control equation variable timer input SV06 asserted	12
SV06T	SELOGIC control equation variable timer output SV06T asserted	13
SV07	SELOGIC control equation variable timer input SV07 asserted	12
SV07T	SELOGIC control equation variable timer output SV07T asserted	13
SV08	SELOGIC control equation variable timer input SV08 asserted	12
SV08T	SELOGIC control equation variable timer output SV08T asserted	13
T01_LED	Target LED 01 SELOGIC control equation (hard coded)	26
T02_LED	Target LED 02 SELOGIC control equation (hard coded)	26
T03_LED	Target LED 03 SELOGIC control equation (hard coded)	26
T04_LED	Target LED 04 SELOGIC control equation (hard coded)	26
T05_LED	Target LED 05 SELOGIC control equation (hard coded)	26
T06_LED	Target LED 06 SELOGIC control equation (hard coded)	26
TESTDB	Command TEST DB (asserted when analog and digital values may be overridden)	8
TMB1A	Channel A transmitted MIRRORED BITS 1	28
TMB1B	Channel B transmitted MIRRORED BITS 1	30
TMB2A	Channel A transmitted MIRRORED BITS 2	28
TMB2B	Channel B transmitted MIRRORED BITS 2	30
TMB3A	Channel A transmitted MIRRORED BITS 3	28
TMB3B	Channel B transmitted MIRRORED BITS 3	30
TMB4A	Channel A transmitted MIRRORED BITS 4	28
TMB4B	Channel B transmitted MIRRORED BITS 4	30
TMB5A	Channel A transmitted MIRRORED BITS 5	28
TMB5B	Channel B transmitted MIRRORED BITS 5	30
TMB6A	Channel A transmitted MIRRORED BITS 6	28
TMB6B	Channel B transmitted MIRRORED BITS 6	30
TMB7A	Channel A transmitted MIRRORED BITS 7	28
TMB7B	Channel B transmitted MIRRORED BITS 7	30
TMB8A	Channel A transmitted MIRRORED BITS 8	28
TMB8B	Channel B transmitted MIRRORED BITS 8	30
TR	Trip SELOGIC control equation	4

Table H.2 Relay Word Bit Definitions for the SEL-2664S (Sheet 6 of 7)

Bit	Bit Description	Row
TRGTR	Target Reset	4
TRIP	Output of Trip Logic	4
TRIP_LED	Trip LED	0
TSNTPB	Asserted when relay time is based on SNTP, using backup server	25
TSNTPP	Asserted when relay time is based on SNTP, using primary server	25
TSOK	Time Synchronization OK	24
TUTC1	Offset hours from UTC time, binary, add 1 if asserted	25
TUTC2	Offset hours from UTC time, binary, add 2 if asserted	25
TUTC4	Offset hours from UTC time, binary, add 4 if asserted	25
TUTC8	Offset hours from UTC time, binary, add 8 if asserted	25
TUTCH	Offset half-hour from UTC time, binary, add 0.5 if asserted	25
TUTCS	Offset hours sign from UTC time, subtract the UTC offset if TUTCS is asserted; otherwise, add	25
ULTRIP	Unlatch (auto reset) trip SELOGIC control equation	4
VB001	Virtual Bit VB001 Asserted	17
VB002	Virtual Bit VB002 Asserted	17
VB003	Virtual Bit VB003 Asserted	17
VB004	Virtual Bit VB004 Asserted	17
VB005	Virtual Bit VB005 Asserted	17
VB006	Virtual Bit VB006 Asserted	17
VB007	Virtual Bit VB007 Asserted	17
VB008	Virtual Bit VB008 Asserted	17
VB009	Virtual Bit VB009 Asserted	18
VB010	Virtual Bit VB010 Asserted	18
VB011	Virtual Bit VB011 Asserted	18
VB012	Virtual Bit VB012 Asserted	18
VB013	Virtual Bit VB013 Asserted	18
VB014	Virtual Bit VB014 Asserted	18
VB015	Virtual Bit VB015 Asserted	18
VB016	Virtual Bit VB016 Asserted	18
VB017	Virtual Bit VB017 Asserted	19
VB018	Virtual Bit VB018 Asserted	19
VB019	Virtual Bit VB019 Asserted	19
VB020	Virtual Bit VB020 Asserted	19
VB021	Virtual Bit VB021 Asserted	19
VB022	Virtual Bit VB022 Asserted	19
VB023	Virtual Bit VB023 Asserted	19
VB024	Virtual Bit VB024 Asserted	19
VB025	Virtual Bit VB025 Asserted	20

Table H.2 Relay Word Bit Definitions for the SEL-2664S (Sheet 7 of 7)

Bit	Bit Description	Row
VB026	Virtual Bit VB026 Asserted	20
VB027	Virtual Bit VB027 Asserted	20
VB028	Virtual Bit VB028 Asserted	20
VB029	Virtual Bit VB029 Asserted	20
VB030	Virtual Bit VB030 Asserted	20
VB031	Virtual Bit VB031 Asserted	20
VB032	Virtual Bit VB032 Asserted	20
VFD_STRT	Variable frequency drive start in progress	6
VN3HIGH	Analog Quantity VN3_MAG > (32.0/NGR_TAP) or (15/NGR_TAP) V for Amplifier Version 2.0 or 1.0, respectively	3
WARN_LED	Warning LED	0
WARNING	Control equation for WARNING	8

APPENDIX I

Analog Quantities

The SEL-2664S contains several analog quantities that can be used for more than one function. Analog quantities are typically generated and used by a primary function, such as metering, and selected quantities are made available for one or more supplemental functions, for example, the profile report monitoring.

Note that all analog quantities available for use in SELOGIC control equations are processed every 25 ms and may not be suitable for fast-response control and protection applications.

Table I.1 lists analog quantities that can be used in the following specific functions:

- SELOGIC control equations (see *Section 4: Protection and Logic Functions*)
- Profile report monitoring (see *Section 5: Metering and Monitoring*)
- DNP (see *Appendix D: DNP3 Communications*)
- Fast Meter (see *Appendix C: SEL Communications Processors*)

For a list of analog quantities available for Modbus® communication, see *Appendix E: Modbus Communications*.

Table I.1 Analog Quantities (Sheet 1 of 2)

Name	Description	Unit	SELOGIC	Profile Report	DNP	Fast Meter
Metering						
INS_RES	Stator Insulation Resistance	kΩ	x	x	x	x
INS_CAP	Stator Insulation Capacitance	uF	x	x	x	x
MES_NGR	Neutral Ground Resistance	Ohm	x	x	x	x
FLDRES	Field Insulation Resistance	kΩ	x	x	x	x
VN1_MAG	Fundamental Neutral Voltage	V sec	x	x	x	x
VN3_MAG	Third-Harmonic Neutral Voltage	V sec	x	x	x	x
VN_RMS	Neutral RMS Voltage	V sec (at NGR_TAP)	x	x	x	x
I_SRC	Injected RMS Current	A sec	x	x	x	x
IN3_MAG	Third-Harmonic Neutral Current	A sec (regardless of CTN location)	x	x	x	x
IN_RMS	Neutral RMS Current	A sec	x	x	x	x
VNF1_MAG	15 Hz/18 Hz Injected Voltages	V sec (at NGR_TAP)	x	x	x	x
INF1_MAG	15 Hz/18 Hz Injected Currents	A sec	x	x	x	x
INS_RES1	15 Hz/18 Hz Stator Insulation	kΩ	x	x	x	x
VNF2_MAG	20 Hz/24 Hz Injected Voltages	V sec (at NGR_TAP)	x	x	x	x
INF2_MAG	20 Hz/24 Hz Injected Currents	A sec	x	x	x	x
INS_RES2	20 Hz/24 Hz Stator Insulation	kΩ	x	x	x	x

Table I.1 Analog Quantities (Sheet 2 of 2)

Name	Description	Unit	SELOGIC	Profile Report	DNP	Fast Meter
VNF3_MAG	30 Hz/36 Hz Injected Voltages	V sec at (NGR_TAP)	x	x	x	x
INF3_MAG	30 Hz/36 Hz Injected Currents	A sec	x	x	x	x
INS_RES3	30 Hz/36 Hz Stator Insulation	kΩ	x	x	x	x
VNF4_MAG	40 Hz/48 Hz Injected Voltages	V sec (at NGR_TAP)	x	x	x	x
INF4_MAG	40 Hz/48 Hz Injected Currents	A sec	x	x	x	x
INS_RES4	40 Hz/48 Hz Stator Insulation	kΩ	x	x	x	x
Date/Time						
DATE	Present date					x
TIME	Present time					x
YEAR	Year number (0000–9999)		x			
DAYY	Day of Year number (1–366)		x			
WEEK	Week number (1–52)		x			
DAYW	Day of Week number (1–7)		x			
MINSM	Minutes since Midnight		x			
RID/TID						
RID	Relay Identifier					
TID	Terminal Identifier					
Part Number/Serial Number						
PART_NUM	Part Number					
SER_NUM	Serial Number				x	
Math Variables						
MV01 to MV08	Math Variable 01 to Math Variable 08		x	x	x	
SELOGIC Counters						
SC01 to SC08	SELOGIC Counter 01 to SELOGIC Counter 08		x	x	x	

Glossary

A — Abbreviation for amperes; units of electrical current magnitude.

ACSELERATOR QuickSet® SEL-5030 Software — A Windows®-based program that simplifies settings and provides analysis support.

Analog — In this instruction manual, Analog is synonymous with Transducer.

ANSI Standard Device Numbers — A list of standard numbers used to represent electrical protection and control relays. The standard device numbers used in this instruction manual include:

59N1, 59NRMS	Neutral Fundamental and RMS Overvoltage Elements
64S	Stator Ground Protection Element
64F	Field Ground Protection Element

ASCII — Abbreviation for American Standard Code for Information Interchange. Defines a standard way to communicate text characters between two electronic devices. The SEL-2664S uses ASCII text characters to communicate using the relay front- and rear-panel EIA-232 serial ports.

Assert — To activate; to fulfill the logic or electrical requirements needed to operate a device. To apply a short-circuit or closed contact to an SEL-2664S input. To set a logic condition to the true state (logical 1). To close a normally-open output contact. To open a normally-closed output contact.

Checksum — A numeric identifier of the firmware in the relay. Calculated by the result of a mathematical sum of the relay code.

CID — Abbreviation for Checksum Identifier. The checksum of the specific firmware installed in the relay.

CR_RAM — Abbreviation for Critical RAM. Refers to the area of relay Random Access Memory (RAM) where the relay stores mission-critical data.

CRC-16 — Abbreviation for Cyclical Redundancy Check-16. A mathematical algorithm applied to a block of digital information to produce a unique, identifying number. Used to ensure that the information was received without data corruption.

CBCT — Abbreviation for core balance current transformer.

Deassert — To deactivate; to remove the logic or electrical requirements needed to operate a device. To remove a short-circuit or closed contact from an SEL-2664S input. To clear a logic condition to the false state (logical 0). To open a normally-open output contact. To close a normally-closed output contact.

Delta — A phase-to-phase connection of voltage transformers for electrical measuring purposes. Typically, two voltage transformers are used with one primary lead of the first transformer connected to A-phase and the other lead connected to B-phase. The second voltage transformer is connected to measure the voltage from B-phase to C-phase. When two transformers are used, this connection is frequently called “Open-Delta.”

Also used for generator winding configuration during Star-Delta starting.

Dropout Time The time measured from the removal of an input signal until the output signal deasserts. The time can be settable, as in the case of a logic variable timer, or can be a result of the characteristics of an element algorithm, as in the case of an overcurrent element dropout time.

Event History A quick look at recent relay activity that includes a standard report header; event number, date, time, and type; maximum fault phase current; and targets.

Event Report A text-based collection of data stored by the relay in response to a triggering condition, such as a fault or command. The data show relay measurements before and after the trigger, in addition to the states of protection elements, relay inputs, and relay outputs each processing interval. After an electrical system fault, use event reports to analyze relay and system performance.

Event Summary A shortened version of stored event reports. An event summary includes items such as event date and time, event type, fault voltages, currents, etc. The relay sends an event report summary (if auto messaging is enabled) to the relay serial port a few seconds after an event.

Fail-Safe An output contact that is energized during normal relay operation and de-energized when relay power is removed or if the relay fails.

Fast Meter, Fast Operate Binary serial port commands that the relay recognizes at the relay front-and rear-panel EIA-232 serial ports. These commands and the responses from the relay make relay data collection by a communications processor faster and more efficient than transfer of the same data through use of formatted ASCII text commands and responses.

FID Relay firmware identification string. Lists the relay model, firmware version and date code, and other information that uniquely identifies the firmware installed in a particular relay.

Field Insulation (kΩ) Resistance of the insulation of the dc field winding in kilohms.

Firmware The nonvolatile program stored in the relay that defines relay operation.

Flash A type of nonvolatile relay memory used for storing large blocks of nonvolatile data, such as profile report records.

IEC 61850 Standard protocol for real-time exchange of data between databases in multi-vendor devices.

IN Neutral current measured by the relay IN input. The IN input is typically connected to the secondary winding of a CBCT placed in the secondary circuit of the neutral grounding transformer (NGT).

LED Abbreviation for Light-Emitting Diode. Used as indicator lamps on the relay front panel.

NEMA Abbreviation for National Electrical Manufacturers Association.

Neutral Grounding Resistor Resistor used in grounding the neutral of the generator to limit the ground fault current.

Nominal Frequency Normal electrical system frequency, usually 50 or 60 Hz.

Nonfail-Safe Refers to an output contact that is not energized during normal relay operation. When referred to a trip or stop output contact, the protected generator remains in operation unprotected when relay power is removed or if the relay fails.

Nonvolatile Memory Relay memory that is able to correctly maintain data it is storing even when the relay is de-energized.

Pickup Time The time measured from the application of an input signal until the output signal asserts. The time can be settable, as in the case of a logic variable timer, or can be a result of the characteristics of an element algorithm, as in the case of an overcurrent element pickup time.

Pinout The definition or assignment of each electrical connection at an interface. Typically refers to a cable, connector, or jumper.

RAM Abbreviation for Random Access Memory. Volatile memory where the relay stores intermediate calculation results, Relay Word bits, and other data that are updated every processing interval.

Relay Word The collection of relay element and logic results. Each element or result is represented by a unique identifier, known as a Relay Word bit.

Relay Word Bit A single relay element or logic result that the relay updates once each processing interval. A Relay Word bit can be equal to either logical 1 or logical 0. Logical 1 represents a true logic condition, picked up element, or asserted contact input or contact output. Logical 0 represents a false logic condition, dropped out element, or deasserted contact input or contact output. You can use Relay Word bits in SELOGIC control equations to control relay tripping, event triggering, and output contacts, as well as other functions.

Remote Bit A Relay Word bit for which state is controlled by serial port commands, including the **CONTROL** command, binary Fast Operate command, or Modbus® command.

RMS Abbreviation for root-mean-square. Refers to the effective value of the sinusoidal current and voltage measured by the relay, accounting for the fundamental frequency and higher order harmonics in the signal.

ROM Abbreviation for Read-Only Memory. Nonvolatile memory where the relay firmware is stored.

Self-Test A function that verifies the correct operation of a critical device subsystem and indicates if an out-of-tolerance condition is detected. The SEL-2664S is equipped with self-tests that validate the relay power supply, microprocessor, memory, and other critical systems.

SELOGIC® Control Equation A relay setting that allows you to control a relay function (such as an output contact) by using a logical combination of relay element outputs and fixed logic outputs. Logical AND, OR, INVERT, rising edge [/], and falling edge [\] operators, plus a single level of parentheses are available to use in each control equation setting.

Sequential Events Recorder A relay function that stores a record of the date and time of each assertion and deassertion of every Relay Word bit in a settable list. Provides a useful way to determine the order and timing of events following a relay operation.

SER Abbreviation for Sequential Events Recorder or the relay serial port command to request a report of the latest 1024 sequential events.

Stator Insulation (kΩ) Resistance of the stator insulation to ground in kilohms.

Stator Insulation (µF) Capacitance of the stator insulation to ground in microfarads.

Terminal Emulation Software Personal computer (PC) software that can be used to send and receive ASCII text messages via the PC serial port.

Wye As used in this instruction manual, a phase-to-neutral connection of voltage transformers for electrical measuring purposes. Three voltage transformers are used with one primary lead of the first transformer connected to A-phase and the other lead connected to ground. The second and third voltage transformers are connected to measure the voltage from B-phase and C-phase-to-ground, respectively. This connection is frequently called "four-wire wye," alluding to the three phase leads plus the neutral lead.

Z-Number That portion of the relay RID string that identifies the proper ACSELERATOR QuickSet relay driver version when creating or editing relay settings files.

Index

Page numbers appearing in bold mark the location of the topic's primary discussion

A

Access Levels
  communications ports 7.15
Accuracy, metering **1.12**
ACSELERATOR QuickSet
  See also Software
Amplifier 1.1, 4.10, 4.16
  self tests 10.19
ASCII Commands
  See Commands
ASCII Protocol
  See SEL ASCII Protocol
Automatic Messages
  See also SEL Binary Protocols
  events 9.1, 9.4

B

Battery, clock **2.17**

C

CEVENT Command 9.2
CHISTORY Command 9.2
Commands
  2ACCESS **7.17**
  ACCESS **7.17**
  COMMUNICATIONS **7.19**
  CONTROL **7.20**
  COUNTER **7.20**
  DATE 1.6
  ETH **7.21**
  FCA **7.21**, 10.3
    FCA S, FCA C, FCA W **7.21**
  FILE **7.22**
  GOOSE **7.22**
  HELP **7.24**
  HISTORY **7.24**, 9.7
  IDENTIFICATION **7.25**
  IRI **7.25**
  L_D **7.26**
  LDP 7.26
  LOOPBACK **7.27**
  MAC **7.27**
  MET **7.28**
  PASSWORD **7.28**
  PING **7.29**
  PULSE **7.30**
  QUIT **7.30**
  R_S **7.30**
  SER **7.30**
  SET **7.31**
  SHOW 7.32
  STATUS **7.33**
  SUMMARY **7.35**
  TARGET **7.35**
  TIME **7.36**
  TRIGGER **7.36**, 9.3
Commissioning Tests
  required equipment 10.2
Communication
  SEL ASCII protocol 7.13–7.36, C.1
  SEL protocols 7.9, **C.1**
Communications
  access levels **7.14**, **7.17**
  ASCII commands 7.17–7.36
  automatic messages 7.14
  control characters 7.14
  DNP3 Protocol **D.1**–D.22
  EIA-232 ports 7.1
  establishing communications procedure 1.5, 7.2
  Ethernet **7.3**
  exception responses E.3
  factory default settings 1.5, 7.2
  fiber-optic port 7.1
  hardware flow control 7.2
  IEC 61850 **F.1–F.25**
  MIRRORED BITS G.1–G.6
  Modbus protocol **E.1–E.30**
  port power, rear 7.7
  rear panel 4.33
  set relay 6.2
Communications Cables and Connections **7.7**
  EIA-232 1.5, 7.8
  EIA-485 7.7
  PC-to-relay cable pinout 7.8
Compressed ASCII **9.2**, **C.1**
Contact Outputs
  control equations 4.19
  de-energized position 2.10
  factory defaults 4.19
  fail-safe
    operation 2.10
    settings 4.19
  output 4.28
CSUMMARY Command 9.2

D

DNP3 Protocol
  data map D.19
  DNP3 LAN/WAN D.5
  DNP3 levels D.1
  DNP3 serial D.3
  DNP3 Settings D.11
  event data D.8
  object list D.13
Dimensions
  mechanical **2.3**, **2.4**, **2.6**
  panel cut **2.6**
  panel cutout **2.6**
  panel-mount **2.4**
  rack-mount **2.6**
  wall-mount **2.3**

E

Earthing
  See Grounding
Ethernet Port(s)
  settings 4.31
Event
  ER control equation 9.3
  nonvolatile 9.1
  TR initiate 9.3
  trigger 9.3
Event History
  See also Event
  HIS command 7.24, 9.7
  retrieving history 9.7
    application example 9.7
Event Report
  See also Event
  clearing the buffer 9.8
  retrieving event data 9.8
  summary section 9.3–9.5
  trigger 9.3
  trigger settings 4.36
Event Summary
  See also Event
  contents 9.3
  event type 9.4
  SUMMARY command 7.35

F

Factory Default
  passwords 7.28
  tripping logic 4.18

Fail-Safe
See also Contact Outputs
TRIP output 4.19
Fast Binary Messages
See also Fast Operate; Fast Meter; Fast SER
Field Calibration Process 10.3
Firmware
upgrade instructions **B.1–B.9**
versions **A.1**
Frequency
event report 9.3
event summary 7.35
Front Panel
communications port 4.31
enabled LED 8.2
serial port 4.31
target LEDs 8.1
Functional Overview **1.2**

G

Grounding 2.8, **2.11**

H

Help, SEL-5030 3.13
History
See Event History

I

IEC 61850 **F.1–F.25**
ACSI Conformance Statements F.21
Configuration F.11
GOOSE F.4
GOOSE Processing F.10
Introduction to F.2
Logical Nodes F.12
Manufacturing Messaging Specification (MMS) F.4, F.16
Operation F.3
Protocol Implementation Conformance Statement F.16
Substation Configuration Language (SCL) F.5
Injection Source Mode 4.5
Installation
environmental conditions xvii
physical location **2.1**
power supply 1.5, **2.8**
rack mounting accessory 1.4
Instruction Manual Versions **A.3**
IRIG-B Time Synchronization
IRI command 7.25
via communications processor C.3

L

Latch Bits, nonvolatile state **4.23**
Logic Settings, output contacts 4.19

M

Maintenance
routine checks 10.16
self testing 10.17
Meter
accuracy 1.12
MIRRORED BITS G.1–G.6
Modbus **E.1–E.30**
03h read holding registers E.7
04h input holding registers E.7
06h preset single register E.9
08h loopback diagnostic command E.10
10h preset multiple registers E.11
60h read parameter E.12
61h read parameter text E.13
62h read enumeration text E.14
7Dh encapsulated packet E.15
7Eh NOP (no operation) E.16
contact outputs E.17
cyclical redundancy check E.3
exception responses E.3
function codes E.2
history data E.19
Modbus Map Settings **4.38**
Modbus Register Map E.19
password protection E.16
protocol description E.1
query E.1
response E.2
Mounting
Rack Mount **2.6**
Wall Mount **2.2**
Multisine signal 1.1, 4.7, 4.16

N

Network Parameters **3.3**
Neutral grounding transformer 2.11

P

Password
access level 7.18
change 7.29
factory default 7.28
Port Settings (SET P Command) **4.30**
Product Labels xvii
Profile Report
LDP command 7.26
monitoring 5.3
settings 4.36, SET.22
Protection Elements
field ground, 64F 4.14
fundamental neutral overvoltage, 59N1and rms neutral overvoltage, 59NRMS 4.7
neutral grounding resistor (NGR) monitor function 4.11
stator ground, 64S 4.11

R

Relay concept diagram 1.1
Relay Word Bits, row list H.1–H.8
Report Settings
event report 4.36
SER trigger 4.35
Retrieve event **3.10**

S

Safety Information
safety marks xv
symbols xv
SEL ASCII Protocol 7.13–7.36, C.1
SEL Binary Protocol **C.2**
SEL Communications Processor **C.3–C.10**
SEL-2664 Field Ground Module
fiber-optic connection 2.11
SEL-2664S relay
cleaning chassis xviii
features **1.2**
Self Tests **10.17**
SELOGIC Control Equations
contact output 4.19
counters **4.28**
event trigger 9.3
operators **4.24–4.27**
Relay Word bits H.1–H.8
timers **4.27**
trip logic 4.17–4.19
Sequential Events Recorder (SER)
clearing 9.10
example report 9.10
report **7.30**
retrieving reports 9.10
trigger settings 4.35, 9.10
SER, See Sequential Events Recorder (SER)
SET Command **7.31**
Set Relay
editing keystrokes 6.3
serial communications port 6.2–6.3
Setting
classes 6.1
error messages **6.4**
instances 6.1
serial communications port 6.2–6.3

Settings
Group Settings (SET Command) **4.4–4.21**
Logic Settings (SET L Command) **4.21–4.30**
Modbus Map Settings (SET M Command) **4.38**
Port Settings (SET P Command) **4.30**
Report Settings (SET R Command) **4.34**
Software (ACSELERATOR QuickSet)
databases **3.4**
device editor **3.8**
expression builder **3.8**
human machine interface (HMI) **3.11**
settings editor **3.6**
Specifications **1.8–1.12**
STA Command 1.6

T

Targets
front-panel function 8.1
Testing
acceptance testing 10.2
commissioning testing 10.2
field calibration process 10.3
maintenance testing 10.16
methods 10.2, 10.16
relay elements 10.16
self tests 10.17
with SER 10.16
with targets, LEDs 10.16
with terminal 10.16
Time Code
See IRIG-B Time Synchronization
Trip Contact
See also Contact Outputs
fail-safe operation 2.10
minimum duration time TDURD 4.18
Trip Reset, front-panel function 8.2
Trip/Close Logic
logic diagram 4.18
minimum trip time TDURD 4.18
trip equation TR 4.18
trip Relay Word bit 4.18
trip unlatch ULTRIP 4.18
Typographic Conventions xvi

U

Upgrade
See Firmware, upgrade instructions

Z

Z-number 3.7, **A.1**

This page intentionally left blank

SEL-2664S Command Summary

The following table lists the front serial port ASCII commands associated with particular activities. The commands are shown in uppercase letters, but they can also be entered using lowercase letters.

Serial Port Command	Command Description
Access Level 0 Commands	
ACC	Goes to Access Level 1
ID	Relay identification code
QUI	Goes to Access Level 0
Access Level 1 Commands	
2AC	Goes to Access Level 2
CEV *n*	Shows 180-cycle compressed event report number *n*, at 1/32-cycle resolution
COM A	Returns a summary report of the last 255 records in the communications buffer for MIRRORED BITS® communications Channel A
COM B	Returns a summary report of the last 255 records in the communications buffer for MIRRORED BITS communications Channel B
COM C	Clears all communications records; if both MIRRORED BITS channels are enabled, omitting the channel specifier (A or B) clears both channels
COM C A	Clears all communications records for Channel A
COM C B	Clears all communications records for Channel B
COM L	Appends a long report to the summary report of the last 255 records in the MIRRORED BITS communications buffer
COM L A	Appends a long report to the summary report of the last 255 records in the communications buffer for MIRRORED BITS communications Channel A
COM L B	Appends a long report to the summary report of the last 255 records in the communications buffer for MIRRORED BITS communications Channel B
COM S	Returns a summary report of the last 255 records in the MIRRORED BITS communications buffer
COU *n*	Shows current state of device counters; *n* = repeat the report *n* times, with a 1/2-second delay between each report
CPRO	Retrieves and displays the compressed ASCII profile report.
DAT	View the date
DAT *dd/mm/yyyy*	Enters the date in DMY format
DAT *mm/dd/yyyy*	Enters the date in MDY format if DATE_F setting is MDY
DAT *yyyy/mm/dd*	Enters the date in YMD format if DATE_F setting is YMD
ETH	Shows the Ethernet port status
FIL DIR	Returns a list of files
FIL READ *filename*	Transfers settings file *filename* from the relay to the PC
FIL SHOW *filename*	Filename 1 displays contents of the file filename
GOO *k*	Displays transmit and receive GOOSE messaging information; enter number *k* to scroll the GOOSE data *k* times on the screen
HEL	Displays a short description of selected commands
HIS *n*	Shows summary of *n* latest event reports, where *n* = 1 is the most recent entry; if *n* is not specified, all event report summaries are displayed

Serial Port Command	Command Description
HIS C or **R**	Clears or resets history buffer
IRIG	Forces synchronization of internal control clock to IRIG-B time-code input
LDP *n*	Displays the *n* most recent LDP records starting with record *n*.
LDP C	Clears profile data
MAC	Displays the MAC address of the Ethernet port (Port 1)
MET	Displays metering data
PING x.x.x.x *t*	Determines if Ethernet port is functioning or configured properly; x.x.x.x is the IP address and *t* is the PING interval settable from 2 to 255 seconds; default *t* is 1 second; press Q to stop
SER	Displays all Sequential Events Recorder (SER) data
SER *d1*	Displays all **SER** records made on date *d1*
SER *d1 d2*	Displays all **SER** records made from dates *d2* to *d1*, inclusive, starting with *d2*
SER *n*	Displays the *n* most recent **SER** records starting with record *n*
SER *n1 n2*	Displays **SER** records *n2* to *n1*, starting with *n2*
SER C or **R**	Clears **SER** data
SHO	Displays relay group settings
SHO L	Displays relay logic settings
SHO M	Displays Modbus User Map settings
SHO P *n*	Displays port settings, where *n* specifies Port (1, 2, 3, or F); *n* defaults to the active port if not listed
SHO R	Displays report settings
STA	Displays relay self-test status
STA S	Displays SELOGIC usage status report
SUM	Displays an event summary
SUM R or **C**	Resets event summary buffer
TAR	Displays default target row or the most recently viewed target row
TAR *n*	Displays target row *n*
TAR *n k*	Displays target row *n*; repeat display of row *n* for repeat count *k*
TAR *name*	Displays the target row with target name in the row
TAR *name k*	Displays the target row with target name in the row; repeat display of this row for repeat count *k*
TAR R	Resets any latched targets and the most recently viewed target row
TIM	View time
TIM *hh:mm:ss*	Sets time by entering **TIM** followed by hours, minutes, and seconds, as shown (24-hour clock)
TRI	Triggers an event report data capture
Access Level 2 Commands	
CAL	Enters Access Level C; if the main board access jumper is not in place, the relay prompts for the entry of the Access Level C password; Access Level C is reserved for SEL use only
CON RB*nn k*	Selects a remote bit to set, clear, or pulse where *nn* is a number from 01 to 08, representing RB01 through RB08; *k* is S, C, or P for Set, Clear, or Pulse
FCA	Allows the user to perform the manual field calibration procedure for the installed SEL-2664S
FCA A	Allows the user to perform the automatic field calibration procedure using the SEL-4664 Field Calibration Module
FCA C	Allows the user to reset the active field calibration values
FCA S	Allows the user to view active field calibration values and the latest measurements associated with them
FCA W	Allows the user to manually enter the active field calibration values
FIL WRITE *filename*	Transfers settings file *filename* from the PC to the relay

Serial Port Command	Command Description
L_D	Loads new firmware
LOO	Enables loopback testing of MIRRORED BITS channels
LOO A	Enables loopback on MIRRORED BITS Channel A for the next 5 minutes
LOO B	Enables loopback on MIRRORED BITS Channel B for the next 5 minutes
PAS 1 ***xxxxxxxx***	Changes Access Level 1 password to *xxxxxxxx*
PAS 2 ***xxxxxxxx***	Changes Access Level 2 password to *xxxxxxxx*
PUL ***n t***	Pulses Output Contact *n* (*n* = OUT01…) for *t* (1 to 30, default is 1) seconds
SET	Modifies relay group settings
SET ***name***	For all **SET** commands, jumps ahead to a specific setting by entering the setting name, e.g., 59N1P
SET L	Modifies SELOGIC variable and timer settings
SET M	Modifies Modbus User Map settings
SET P ***n***	Modifies port *n* settings (*n* = 1, 2, 3, or F; if not specified, the default is the active port)
SET R	Modifies report settings
SET…TERSE	For all **SET** commands, **TERSE** disables the automatic **SHO** command after the settings entry
STA R or **C**	Clears self-test status and restart relay
VEC D	Displays a standard vector diagnostics report (useful to the factory in troubleshooting)
VEC E	Displays an extended vector diagnostics report (useful to the factory in troubleshooting)
Access Level CAL Commands	
PAS C	Changes Access Level C password

This page intentionally left blank

SEL-2664S Command Summary

The following table lists the front serial port ASCII commands associated with particular activities. The commands are shown in uppercase letters, but they can also be entered using lowercase letters.

Serial Port Command	Command Description
Access Level 0 Commands	
ACC	Goes to Access Level 1
ID	Relay identification code
QUI	Goes to Access Level 0
Access Level 1 Commands	
2AC	Goes to Access Level 2
CEV *n*	Shows 180-cycle compressed event report number *n*, at 1/32-cycle resolution
COM A	Returns a summary report of the last 255 records in the communications buffer for MIRRORED BITS® communications Channel A
COM B	Returns a summary report of the last 255 records in the communications buffer for MIRRORED BITS communications Channel B
COM C	Clears all communications records; if both MIRRORED BITS channels are enabled, omitting the channel specifier (A or B) clears both channels
COM C A	Clears all communications records for Channel A
COM C B	Clears all communications records for Channel B
COM L	Appends a long report to the summary report of the last 255 records in the MIRRORED BITS communications buffer
COM L A	Appends a long report to the summary report of the last 255 records in the communications buffer for MIRRORED BITS communications Channel A
COM L B	Appends a long report to the summary report of the last 255 records in the communications buffer for MIRRORED BITS communications Channel B
COM S	Returns a summary report of the last 255 records in the MIRRORED BITS communications buffer
COU *n*	Shows current state of device counters; *n* = repeat the report *n* times, with a 1/2-second delay between each report
CPRO	Retrieves and displays the compressed ASCII profile report.
DAT	View the date
DAT *dd/mm/yyyy*	Enters the date in DMY format
DAT *mm/dd/yyyy*	Enters the date in MDY format if DATE_F setting is MDY
DAT *yyyy/mm/dd*	Enters the date in YMD format if DATE_F setting is YMD
ETH	Shows the Ethernet port status
FIL DIR	Returns a list of files
FIL READ *filename*	Transfers settings file *filename* from the relay to the PC
FIL SHOW *filename*	Filename 1 displays contents of the file filename
GOO *k*	Displays transmit and receive GOOSE messaging information; enter number *k* to scroll the GOOSE data *k* times on the screen
HEL	Displays a short description of selected commands
HIS *n*	Shows summary of *n* latest event reports, where *n* = 1 is the most recent entry; if *n* is not specified, all event report summaries are displayed

Serial Port Command	Command Description
HIS C or **R**	Clears or resets history buffer
IRIG	Forces synchronization of internal control clock to IRIG-B time-code input
LDP *n*	Displays the *n* most recent LDP records starting with record *n*.
LDP C	Clears profile data
MAC	Displays the MAC address of the Ethernet port (Port 1)
MET	Displays metering data
PING x.x.x.x *t*	Determines if Ethernet port is functioning or configured properly; x.x.x.x is the IP address and *t* is the PING interval settable from 2 to 255 seconds; default *t* is 1 second; press Q to stop
SER	Displays all Sequential Events Recorder (SER) data
SER *d1*	Displays all **SER** records made on date *d1*
SER *d1 d2*	Displays all **SER** records made from dates *d2* to *d1*, inclusive, starting with *d2*
SER *n*	Displays the *n* most recent **SER** records starting with record *n*
SER *n1 n2*	Displays **SER** records *n2* to *n1*, starting with *n2*
SER C or **R**	Clears **SER** data
SHO	Displays relay group settings
SHO L	Displays relay logic settings
SHO M	Displays Modbus User Map settings
SHO P *n*	Displays port settings, where *n* specifies Port (1, 2, 3, or F); *n* defaults to the active port if not listed
SHO R	Displays report settings
STA	Displays relay self-test status
STA S	Displays SELOGIC usage status report
SUM	Displays an event summary
SUM R or **C**	Resets event summary buffer
TAR	Displays default target row or the most recently viewed target row
TAR *n*	Displays target row *n*
TAR *n k*	Displays target row *n*; repeat display of row *n* for repeat count *k*
TAR *name*	Displays the target row with target name in the row
TAR *name k*	Displays the target row with target name in the row; repeat display of this row for repeat count *k*
TAR R	Resets any latched targets and the most recently viewed target row
TIM	View time
TIM *hh:mm:ss*	Sets time by entering **TIM** followed by hours, minutes, and seconds, as shown (24-hour clock)
TRI	Triggers an event report data capture
Access Level 2 Commands	
CAL	Enters Access Level C; if the main board access jumper is not in place, the relay prompts for the entry of the Access Level C password; Access Level C is reserved for SEL use only
CON RB*nn k*	Selects a remote bit to set, clear, or pulse where *nn* is a number from 01 to 08, representing RB01 through RB08; *k* is S, C, or P for Set, Clear, or Pulse
FCA	Allows the user to perform the manual field calibration procedure for the installed SEL-2664S
FCA A	Allows the user to perform the automatic field calibration procedure using the SEL-4664 Field Calibration Module
FCA C	Allows the user to reset the active field calibration values
FCA S	Allows the user to view active field calibration values and the latest measurements associated with them
FCA W	Allows the user to manually enter the active field calibration values
FIL WRITE *filename*	Transfers settings file *filename* from the PC to the relay

Serial Port Command	Command Description
L_D	Loads new firmware
LOO	Enables loopback testing of MIRRORED BITS channels
LOO A	Enables loopback on MIRRORED BITS Channel A for the next 5 minutes
LOO B	Enables loopback on MIRRORED BITS Channel B for the next 5 minutes
PAS 1 ***xxxxxxxx***	Changes Access Level 1 password to *xxxxxxxx*
PAS 2 ***xxxxxxxx***	Changes Access Level 2 password to *xxxxxxxx*
PUL ***n t***	Pulses Output Contact *n* (*n* = OUT01…) for *t* (1 to 30, default is 1) seconds
SET	Modifies relay group settings
SET ***name***	For all **SET** commands, jumps ahead to a specific setting by entering the setting name, e.g., 59N1P
SET L	Modifies SELOGIC variable and timer settings
SET M	Modifies Modbus User Map settings
SET P ***n***	Modifies port *n* settings (*n* = 1, 2, 3, or F; if not specified, the default is the active port)
SET R	Modifies report settings
SET…TERSE	For all **SET** commands, **TERSE** disables the automatic **SHO** command after the settings entry
STA R or **C**	Clears self-test status and restart relay
VEC D	Displays a standard vector diagnostics report (useful to the factory in troubleshooting)
VEC E	Displays an extended vector diagnostics report (useful to the factory in troubleshooting)
Access Level CAL Commands	
PAS C	Changes Access Level C password

This page intentionally left blank