SEL-221S
SEL-121S

Single-Pole Trip Relay
Phase and Ground
Distance Relay
Ground Directional
Overcurrent Relay
Reclosing Relay
Fault Locator

Instruction Manual

19950216

SEL® SCHWEITZER ENGINEERING LABORATORIES, INC.

⚠CAUTION

Equipment components are sensitive to electrostatic discharge (ESD). Undetectable permanent damage can result if you do not use proper ESD procedures. Ground yourself, your work surface, and this equipment before removing any cover from this equipment. If your facility is not equipped to work with these components, contact SEL about returning this device and related SEL equipment for service.

⚠WARNING

Have only qualified personnel service this equipment. If you are not qualified to service this equipment, you can injure yourself or others, or cause equipment damage.

⚠WARNING

Use of this equipment in a manner other than specified in this manual can impair operator safety safeguards provided by this equipment.

⚠DANGER

Disconnect or de-energize all external connections before opening this device. Contact with hazardous voltages and currents inside this device can cause electrical shock resulting in injury or death.

⚠DANGER

Contact with instrument terminals can cause electrical shock that can result in injury or death.

⚠ATTENTION

Les composants de cet équipement sont sensibles aux décharges électrostatiques (DES). Des dommages permanents non-décelables peuvent résulter de l'absence de précautions contre les DES. Raccordez-vous correctement à la terre, ainsi que la surface de travail et l'appareil avant d'en retirer un panneau. Si vous n'êtes pas équipés pour travailler avec ce type de composants, contacter SEL afin de retourner l'appareil pour un service en usine.

⚠AVERTISSEMENT

Seules des personnes qualifiées peuvent travailler sur cet appareil. Si vous n'êtes pas qualifiés pour ce travail, vous pourriez vous blesser avec d'autres personnes ou endommager l'équipement.

⚠AVERTISSEMENT

L'utilisation de cet appareil suivant des procédures différentes de celles indiquées dans ce manuel peut désarmer les dispositifs de protection d'opérateur normalement actifs sur cet équipement.

⚠DANGER

Débrancher tous les raccordements externes avant d'ouvrir cet appareil. Tout contact avec des tensions ou courants internes à l'appareil peut causer un choc électrique pouvant entraîner des blessures ou la mort.

⚠DANGER

Tout contact avec les bornes de l'appareil peut causer un choc électrique pouvant entraîner des blessuers ou la mort.

© 1990–1995 by Schweitzer Engineering Laboratories, Inc. All rights reserved.

All brand or product names appearing in this document are the trademark or registered trademark of their respective holders. No SEL trademarks may be used without written permission. SEL products appearing in this document may be covered by US and Foreign patents.

Schweitzer Engineering Laboratories, Inc. reserves all rights and benefits afforded under federal and international copyright and patent laws in its products, including without limitation software, firmware, and documentation.

The information in this manual is provided for informational use only and is subject to change without notice. Schweitzer Engineering Laboratories, Inc. has approved only the English language manual.

This product is covered by the standard SEL 10-year warranty. For warranty details, visit www.selinc.com or contact your customer service representative.

PM221S-01

Warning

This device is shipped with default passwords. Default passwords should be changed to private passwords at installation. Failure to change each default password to a private password may allow unauthorized access. SEL shall not be responsible for any damage resulting from unauthorized access.

ATTENTION!

Cet équipement est expédié avec des mots de passe par défaut. A l'installation, les mots de passe par défaut devront être changés pour des mots de passe confidentiels. Dans le cas contraire, un accès non-autorisé à l'équipement pourrait être possible. SEL décline toute responsabilité pour tout dommage résultant de cet accès non-autorisé.

20001120

Standard Product Warranty – Ten Years

Definition of Terms

Product: All items manufactured by SEL that are sold to a customer.

New Product: A product manufactured by SEL that is sold for the first time.

Customer: An end-user of the product.

New Product Warranty

All new products sold to customers are warranted against defects in design, materials, and workmanship for a period of ten (10) years from the date of first retail delivery to a customer. If it is determined that the new product defect is covered under this warranty, SEL will repair, replace, or substitute an identical unit at its own discretion to the customer at no charge.

SEL may, at its own discretion, require the customer to ship the unit back to the factory for diagnosis before making a determination as to whether it is covered by this warranty. In such event, SEL may, at its own discretion, decide to provide the customer with a substitute unit which may be sent to the customer either from the SEL factory or from an authorized representative or distributor from their inventory.

All expenses related to the shipment of defective units back to SEL or the provision of a substitute unit to the customer are the responsibility of the customer. This expense may include, but is not limited to, freight, insurance, Customs clearance, and duties. All expenses related to the shipment of repaired units back to customers (or the provision of a new unit to the customer) will be borne by SEL.

Product Upgrade Policy

From time to time, SEL makes product upgrades to add to or enhance the performance of the products. Customers of a particular product being issued an upgrade will be notified either by SEL directly or through its authorized representatives or distributors.

Customers who have purchased an annual upgrade policy will receive all upgrades during the calendar year free of charge. Customers who did not purchase the annual upgrade policy may purchase each unit upgrade individually. The annual upgrade policy can be purchased at any time. Regardless of whether the upgrade policy is purchased, SEL will make reasonable efforts to notify all customers of all available upgrades.

SCHWEITZER ENGINEERING LABORATORIES
2350 NE Hopkins Court • Pullman, WA • 99163-5603 • USA
Phone: (509) 332-1890 • Fax: (509) 332-7990
E-mail: info@selinc.com • Internet: www.selinc.com

EQUIPMENT REPAIR AND WARRANTY

Repair costs of products not covered under this warranty are paid for by customers. Customers are responsible for the cost of shipping the products to SEL located at: 2350 NE Hopkins Court, Pullman, Washington 99163 USA.

All products repaired by SEL will be warranted against defects in material and workmanship for a period of one year from the date the equipment is returned to the customer or the remainder of the new product warranty, whichever is longer.

LIMITATIONS

SEL's warranty does not extend to (A) SEL's products subject to (i) improper installation, connection, operation, maintenance, or storage; (ii) accident, damage, abuse, or misuse; (iii) abnormal or unusual operating conditions or applications outside the specifications for the product; (iv) a purpose or application in any way different from that for which the products were designed; or (v) repairs conducted by persons other than SEL employees or an authorized representative or distributor; (B) Equipment and products not manufactured by SEL. Such equipment and products may be covered by a warranty issued by the respective manufacturer.

This warranty is in lieu of any other warranties, express or implied, including without limitation, any warranty of merchantability or fitness for a particular purpose, and is in lieu of any and all other obligations or liability of SEL. Under no circumstances shall SEL be liable for any accidential or consequential damages or for any other loss, injury, damage, or expense of any kind including loss of profits arising hereunder.

To the extent any court, arbitration panel, or other governmental body of competent jurisdiction shall declare any provision of this warranty invalid or unenforceable by reason of a rule of law or public policy, all the other provisions hereof shall remain in full force and effect.

All brand or product names appearing in this document are the trademark or registered trademark of their respective holders.

Schweitzer Engineering Laboratories, SELOGIC, Connectorized, and SEL are registered trademarks of Schweitzer Engineering Laboratories.

Copyright © SEL 1996, 1997, 1998, 1999, 2000 (All rights reserved) Printed in USA.

SEL RELAY INSTRUCTION MANUAL ADDENDUM

ACB PHASE ROTATION OPTION

The SEL relay instruction manuals are written for standard ABC phase rotation applications. If your SEL relay is ordered with the ACB phase rotation option, references made in the instruction manual to voltage and current phase angle should be noted accordingly. The firmware identification number (FID) may be used to verify whether your relay was ordered with ABC or ACB rotation.

All current and voltage inputs are connected to the SEL relay rear panel as shown in the instruction manual.

TABLE OF CONTENTS

INTRODUCTION

Overview 1-1
General Information 1-1
Specifications 1-3
Basic Protective Capabilities 1-7
Hardware Description 1-9
Signal Processing 1-10

INITIAL CHECKOUT

Equipment Required 2-1
Checkout Procedure 2-1

FUNCTIONAL DESCRIPTION

Introduction 3-1
Inputs and Outputs 3-1
Definition of Logic Variables 3-5
Intermediate Logic 3-7
Relay Word 3-9
Output Equations 3-11
Reclosing Relay 3-13
Fault Type Selection 3-13
Targets 3-14
Self Tests 3-14
Setting Procedure 3-16
Event Report 3-17
Fault Locator 3-17
Mho Units 3-20
Directional Element 3-21
Relay Element Operating Time Curves 3-22
Residual Overcurrent Element 3-23
Residual Time-Overcurrent Element and Curves 3-23
Time-Overcurrent Curve Equations 3-24
Logic Diagrams 3-29

COMMANDS AND SERIAL COMMUNICATIONS

Introduction 4-1
Serial Port Connections and Configurations 4-1
Communications Protocol 4-4
Command Characteristics 4-6
Command Descriptions 4-8
SEL-221S Relay/Fault Locator Command Summary 4-27

EVENT REPORTING

Introduction 5-1
Example Event Report 5-2
Interpretation of Voltage and Current Data 5-3
Relay Element Status Indicators 5-4
Firmware Identification 5-7
Sample Event Report 5-8

INSTALLATION

Mounting 6-1
Frame Ground Connection 6-1
Power Connections 6-1
Secondary Circuits 6-1
Control Circuits 6-2
Communications Circuits 6-2
Jumper Selection 6-2
EIA RS-232-C and IRIG-B Installation 6-3
Installation Checkout 6-5
SEL Direction and Polarity Check Form 6-12

MAINTENANCE AND TESTING

SEL-221S Test Procedure 7-1
Removal of Front Panel and Drawout Assembly 7-7
Calibration 7-7
Troubleshooting Guide 7-7
Program to Compute Test Set Settings for Testing Distance Relays 7-15

INTERNAL DIAGRAMS

Parts Placement Diagram

TABLES

Table 2.1: Fault Locator Test Values 2-4
Table 2.2: Output Contact and Target LED Results 2-5
Table 3.1: Relay Word 3-9
Table 3.2: Relay Word Bit Summary Table 3-10
Table 3.3: Power Supply Self Test Limits 3-15
Table 4.1: SEL-221S Relay Serial Port Connector Pin Assignments 4-3
Table 4.2: SEL-121S Relay Serial Port Connector Pin Assignments 4-4
Table 4.3: Hexadecimal/Binary Conversion 4-15
Table 4.4: Self Test Status Summary 4-17
Table 4.5: Target LED Assignment 4-18

FIGURES

Figure 1.1: SEL-221S Relay Function Block Diagram 1-8
Figure 1.2: Hardware Block Diagram 1-9
Figure 3.1: Mho Element Reach at Maximum Torque Angle 3-20
Figure 3.2: Phase and Ground Distance Element Speed Curves 3-22
Figure 3.3: Residual Time-Overcurrent Element Moderately Inverse Time Characteristic (Curve 1) 3-25
Figure 3.4: Residual Time-Overcurrent Element Inverse Time Characteristic (Curve 2) . . . 3-26
Figure 3.5: Residual Time-Overcurrent Element Very Inverse Time Characteristic (Curve 3) 3-27
Figure 3.6: Residual Time-Overcurrent Element Extremely Inverse Time Characteristic (Curve 4) 3-28
Logic Diagrams 3-29
Figure 4.1: SEL-221S Relay Nine-Pin Connector Pin Number Convention 4-2
Figure 4.2: SEL-121S Relay Nine-Pin Connector Pin Number Convention 4-2
Figure 6.1: SEL-221S Relay Nine-Pin Connector Pin Number Convention 6-4
Figure 6.2: Horizontal Front and Rear Panel Drawings 6-7
Figure 6.3: Relay Dimensions, Panel Cutout, and Drill Plan 6-8
Figure 6.4: Communications and Clock Connections - One Unit at One Location 6-9
Figure 6.5: Communications and Clock Connections - Multiple Units at One Location 6-9
Figure 6.6: SEL Relay Communications Diagram for Connection to the SEL-DTA 6-10
Figure 6.7: External Ac Current and Voltage Connections 6-10
Figure 6.8: External Dc Connection Diagram (Typical) 6-11
SEL Direction and Polarity Check Form 6-12

INTRODUCTION
TABLE OF CONTENTS

Overview 1-1
General Information 1-1
Specifications 1-3
Basic Protective Capabilities 1-7
Hardware Description 1-9
Signal Processing 1-10

FIGURES

Figure 1.1: SEL-221S Relay Function Block Diagram 1-8
Figure 1.2: Hardware Block Diagram 1-9

INTRODUCTION

OVERVIEW

This instruction manual applies to SEL-121S and SEL-221S relays. The SEL-221S and SEL-121S relays have identical protection features, but use different hardware designs. Where there are differences between the two relay models, both relays are described.

The features of the SEL-221S relay include:

- Distance relaying for phase, three-phase, and ground faults
- Directional time-overcurrent protection for ground faults
- Single-pole trip outputs
- Switch-onto-fault protection
- Loss-of-potential detection
- Versatile user-programmable logic
- Single-shot reclosing
- Transmission line fault locating
- Event recording
- Automatic self testing
- Metering
- Target indicators for faults and testing
- Demodulated IRIG-B time code input
- Communications ports for local and remote access
- Compact size and economical

GENERAL INFORMATION

This introduction provides specifications for the SEL-221S relay and describes its theory of operation. Although you should be familiar with this information before applying the relay, you may wish to complete the INITIAL CHECKOUT procedure before reading the entire manual.

Communications functions provide remote and local examination of a wide range of data, including the voltages and currents presented to the instrument, system settings, and a history of the twelve most recent fault types and locations. System settings may be entered and modified remotely or locally. The relay also allows circuit breaker control via the communications channels. Settings and circuit breaker control are protected by a secure two-level password access scheme which is monitored for unauthorized access by the ALARM contact output.

The SEL-221S relay includes a fault locator which uses fault type, prefault, and fault conditions to provide an accurate estimate of fault location without the need for communications channels, special instrument transformers, or source impedances, even during conditions of substantial load flow and fault resistance.

A detailed event report is generated following every fault. It contains all information required to quantitatively examine the prefault, fault, and postfault voltages and currents. Parameters such as fault current sensed by the relay, relay response time, and total fault clearing time are easily obtained. The event report includes the distance to the fault, the type of fault, and the state of all relay units during the event. Each event is time-tagged by a self-contained clock. In addition to the automatic generation of this report for faults, the report may be generated upon command or by assertion of any of several control inputs to the instrument. This allows triggering the report from other equipment, such as oscillographic starting units or other relaying systems. The SEL-221S relay retains the twelve most recent event reports. The user may recall any of these reports on command.

Phasor diagrams of voltages and currents showing the prefault, fault, and postfault conditions can be constructed from the fault report. The accurate information is useful in verifying short-circuit and load-flow calculations, verifying transmission line constants, and measuring voltage and current unbalance. It can also be used to check the input connections for proper phase-sequence rotation and polarity.

The instrument is designed to provide long-term accuracy. Amplitude-dependent measurements are made with respect to an internal stable and precise voltage reference, which is monitored as a part of the self-checking process. Long-term phase stability is guaranteed, since all phase-shifting operations are performed by precise time delays controlled from a quartz crystal oscillator.

SPECIFICATIONS

Relay Functions

Expanded mho characteristics for all faults
Three phase-to-phase zones
Three phase-to-ground zones
Infinite-impulse-response filter provides a minimum of six cycles of memory polarization for all mho elements.
Phase and residual overcurrent supervision of ground mho elements.
Phase overcurrent supervision of phase mho elements.
High-set phase overcurrent elements.

Two residual overcurrent elements for ground faults
One time delayed element, with nondirectional or forward directional supervision.
Time-overcurrent element with selectable curve shapes.

Negative-sequence directional element supervises distance and residual overcurrent elements.
Distance element security is enhanced by directional element supervision.

Loss-of-potential logic
Relay uses negative-sequence and positive-sequence quantities to detect loss of one, two, or three potential fuses. Blocks distance element operation, when enabled.

Single-shot recloser
Reclosing function includes settable open interval and reset time delays, in addition to settable initiate and cancel conditions.

Phase Overcurrent Elements (Secondary Values)

50AG, 50BG, 50CG (supervise ground mho elements)
Pickup: 0.5 to 80 A, ±0.1 A ±2% of setting
50AP, 50BP, 50CP (supervise phase mho elements)
50AH, 50BH, 50CH (high-set elements)
Pickup: 0.5 to 80 A, ±0.1 A ±2% of setting
Transient Overreach: 5% of set pickup

Phase and Ground Distance Elements (Secondary Values)

Zone 3 ground mho distance: 21AG3, 21BG3, 21CG3
Zone 3 phase mho distance: 21AB3, 21BC3, 21CA3
Zone 2 ground mho distance: 21AG2, 21BG2, 21CG2
Zone 2 phase mho distance: 21AB2, 21BC2, 21CA2
Zone 1 ground mho distance: 21AG1, 21BG1, 21CG1
Zone 1 phase mho distance: 21AB1, 21BC1, 21CA1

Minimum Sensitivity: 0.5 A

Maximum Torque Angle: 47° - 90° in 1° steps

Operating Time: 22 ms typical, see operating time curves near the end of Section 3.

Residual Current Compensation (K) Factor Range

Magnitude limits: $0.0833 < |K| < 2.0$
Angle range limits: $47° < MTA + \angle K < 113°$

Where: $K = \frac{Z0 - Z1}{3 \times Z1}$

$Z0 = R0 + jX0$
$Z1 = R1 + jX1$
R0, X0, R1, X1 Relay Impedance Settings

Zone 1, 2, 3 reach: 0.125 to 64 ohms,
Zone 1 < Zone 2 < Zone 3

Steady-state Error:
5% of set reach ±0.01 ohm at maximum torque angle (MTA) for $V > 5$ V and $I > 2$ A
10% of set reach ±0.01 ohm at maximum torque angle (MTA) for $5 > V > 1$ V or $0.5 < I < 2$ A

Transient Overreach:
5% of set reach, plus steady-state error

Positive-Sequence Voltage Memory Polarization:
All mho elements are memory-polarized by an infinite-impulse response filter with a four-cycle time constant, yielding polarization for at least six cycles.

Ground Overcurrent Elements (Secondary Values)

51N residual time-overcurrent element:
Selectable curve shape (4 curves)
Time dial: 0.50 to 15.00 in 0.01 steps
Pickup: 0.5 A to 8 A, ±0.05 A ±3% of setting
Timing: ±4% and ±1 cycle for residual current magnitude between 2 and 20 multiples of pickup
May be directionally controlled (51NTC setting)

67N residual overcurrent element:
Pickup: 0.5 A to 80 A
Time delay: 0-8000 cycles in quarter-cycle increments
Transient overreach: 5% of set pickup
May be directionally controlled (67NTC setting)

50N residual overcurrent element:
Pickup: 0.5 A to 80 A
Transient Overreach: 5% of set pickup
Nondirectional element - supervises ground mho elements

Negative-Sequence Directional Element (32Q)

Angle: same as mho element maximum torque angle (MTA) setting
Sensitivity: less than 0.32 VA of V2 x I2, at MTA
This element directionally controls residual overcurrent elements, and adds directional security to the distance relay elements for all unbalanced faults.

Sequence-Component Elements

Negative-sequence overvoltage element (47QL)
Pickup: 14 volts of V2
Negative-sequence overcurrent element (46QL)
Pickup: 0.083 amps of I2
Positive-sequence overvoltage element (47P)
Pickup: 14 volts of V1

Fault Location

Fault location is computed from event reports which are stored following each fault. The algorithm compensates for prefault current to improve accuracy for high-resistance faults.

Fault Reporting

A data record is retained for each of the twelve most recent faults. It includes the date, time, current, voltage, relay element, input contact, and output contact information. The report may also be triggered by command or contact closure. When tripping occurs after the end of the event report, a second report is triggered at tripping.

Self Testing	Analog ac channel offset errors Stall timer monitors processor Power supply voltage checks Setting checks RAM, ROM, and A/D converter tests
Rated Input Voltage	60-75 volts/phase, three-phase, four wire connection (VA, VB, VC, VN)
Rated Input Current	5 amps per phase nominal 15 amps per phase continuous 500 amps for one second thermal rating
Output Contact Ratings	30 amp make per IEEE C37-90 para 6.7.2 6 amp carry continuously MOV protection provided
Logic Input Ratings	24 Vdc: 10 - 30 Vdc 48 Vdc: 25 - 60 Vdc 125 Vdc: 60 - 200 Vdc 250 Vdc: 200 - 280 Vdc Current = 4 mA at nominal voltage
Power Supply	24/48 Volt: 20 - 60 Vdc; 12 watts 125/250 Volt: 85 - 350 Vdc or 85 - 264 Vac; 12 watts
Dielectric Strength	Routine tested: V, I inputs: 2500 Vac for 10 seconds Other: 3000 Vdc for 10 seconds (excludes EIA RS-232-C)
Interference Tests	IEEE C37-90 SWC test (type-tested) Other: 3000 Vdc for 10 seconds (excludes EIA RS-232-C)
Impulse Tests	IEC 255-5 0.5 joule, 5000 volt test (type-tested)
RFI Tests	Type-tested near a ¼-wave antenna driven by 20 watts at 150 MHz and 450 MHz, randomly keyed on and off, at a distance of 1 meter from relay.
Dimensions	3.5" x 19" x 10.5" (8.89 cm x 48.2 cm x 26.7 cm) (H x W x D), SEL-221S 5.25" x 19" x 13" (13.3 cm x 48.2 cm x 33.0 cm) (H x W x D), SEL-121S Mounts in EIA 19" rack, or panel cutout.
Unit Weight	16 pounds (7.3 kg), SEL-221S 21 pounds (9.5 kg), SEL-121S
Shipping Weight	26 pounds (11.8 kg), including two instruction manuals, SEL-221S 32 pounds (14.5 kg), including two instruction manuals, SEL-121S

Operating Temp. -40° F to 158° F (-40° C to 70° C), SEL-221S

Burn-in Temp. Each relay is burned in at 60° C for 100 hours.

BASIC PROTECTIVE CAPABILITIES

The SEL-221S relay provides complete protection for transmission line faults of all types.

Figure 1.1 illustrates the basic configuration of the protective capabilities. (Exact descriptions of the logic are found in the FUNCTIONAL DESCRIPTION Section of this manual.)

Analog inputs from current and voltage transformers are delivered to the protective relaying elements and saved for additional features, such as metering and fault locating.

The relay elements process the analog data and intermediate logic is performed including overcurrent supervision of the mho elements, directional supervision of the residual inverse-time overcurrent element, and grouping of certain elements into zones.

The states of the intermediate results and other information are recorded in the Relay Word.

Logic for tripping, closing and other purposes uses the Relay Word data. Most of this logic is programmable by logic masks.

Below, the basic protective capabilities are grouped and explained by fault type.

Phase-Phase and Three-Phase Faults

Three zones are provided for phase faults. Zones 1, 2, and 3 are mho circles, polarized by the positive-sequence voltage with memory.

The phase distance elements are supervised by three nondirectional phase overcurrent elements, loss-of-potential logic when enabled, and a negative-sequence directional element.

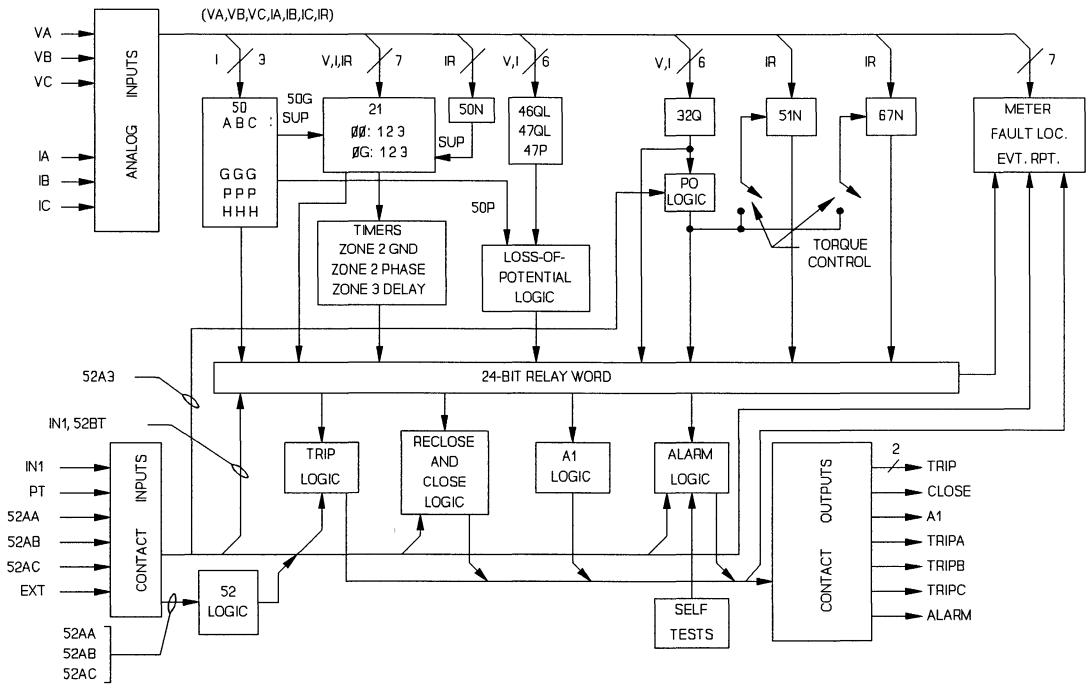

Figure 1.1: SEL-221S Relay Function Block Diagram

Ground Faults

Ground fault protection consists of three mho element zones, a residual time-overcurrent element, and a residual instantaneous overcurrent element. The ground distance elements are supervised by three-phase overcurrent elements (50AG, 50BG, 50CG) an instantaneous residual overcurrent element (50N), loss-of-potential logic (when enabled), and a negative-sequence directional element.

The 67N and 51N ground elements can be disabled during a single pole trip using the Pole Open (PO) feature. The curve shape of the time-overcurrent element (51N) is user-selectable. This element is either nondirectional or forward-reaching, as enabled.

Switch-Onto-Fault Protection

The high-set overcurrent element (50H) should respond to a zero-voltage three-phase fault at any time. In addition, the phase overcurrent elements may be enabled whenever the 52A3 logic variable is not asserted (any breaker pole open), and during the reset interval following breaker closure.

The LOP logic is cleared when any one breaker pole opens. This allows the phase-phase and phase-ground mhos to operate during an open pole period when line side PTs are used.

The flexible trip logic also allows for other combinations of relay elements to provide switch-onto-fault protection.

Reclosing

A single-shot reclosing relay is provided. Reclosing may be initiated or cancelled for any condition recorded in the Relay Word by programming the Reclose Initiate and Reclose Cancel Masks (MRI and MRC).

HARDWARE DESCRIPTION

Figure 1.2 illustrates the major parts of the relay. Current and voltage inputs are isolated by input transformers. The signals are low-pass filtered, sampled by sample/hold amplifiers, and then multiplexed to a programmable-gain amplifier. Its output drives an analog-to-digital converter. This analog-input network gives the microcomputer measurements of the voltages and currents four times per power-system cycle.

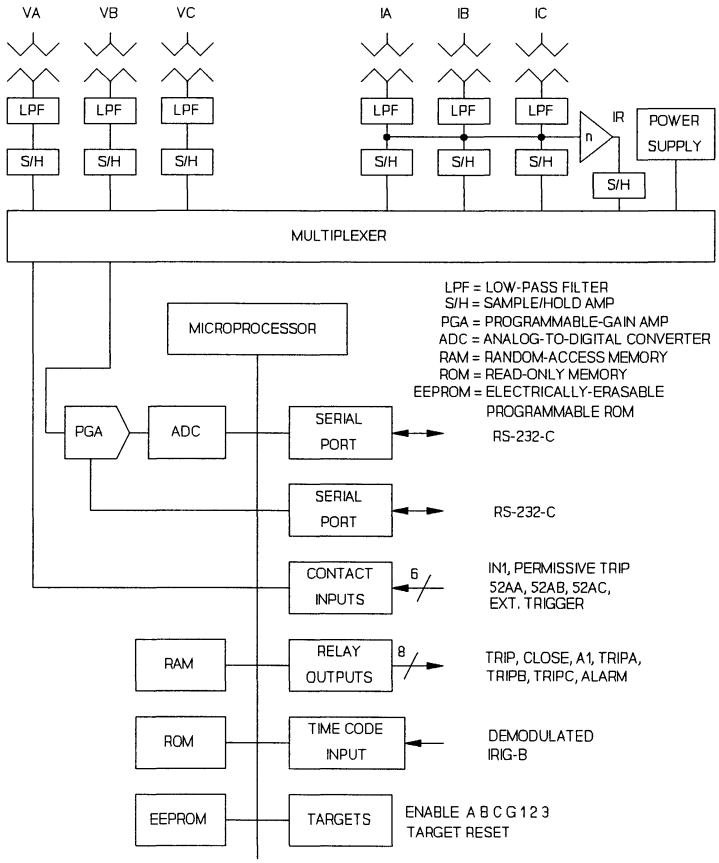

Figure 1.2: Hardware Block Diagram

The microcomputer consists of an eight-bit microprocessor, ROM (read-only memory) for program storage, RAM (random-access memory) for data storage, and EEPROM (electrically-erasable programmable ROM) for storing the relay settings. The EEPROM saves settings even during power loss. Input/output (I/O) devices connected to the microcomputer bus provide for the control of the output relays and targets, and for monitoring inputs, such as the state of the breaker 52A contacts. Other I/O devices provide communications for setting, reporting, fault location and other purposes. An input for time code is also provided, so that the internal time clock of the relay may be synchronized to an external source of time code.

SIGNAL PROCESSING

The relay derives phasor representations of voltage and current from samples taken four times a cycle. The relay updates the phasors every quarter-cycle. The relaying and fault-locating algorithms subsequently process the phasor quantities.

The digital filters eliminate dc offset introduced by the analog electronics, the decaying exponential offset present on the current data following a fault, and pass the power system frequency information. The digital filters are simple, so that a minimum burden of computation is placed on the microprocessor.

The relay employs a very simple and effective digital filter which has the properties of a double-differentiator smoother, and which requires only addition and subtraction of data samples. Let the latest four samples of one channel of information be X1, X2, X3, and X4. The filter is defined by:

$$P = X1 - X2 - X3 + X4$$

This filter has the desired property of eliminating dc offsets, as can be seen by setting all the samples to the same value and noting that the filter output is zero. It also eliminates ramps, as can be seen by setting the samples equal to 1, 2, 3, 4, and again noting an output of zero.

A new value of P for each input is computed every one-fourth cycle. The latest value of P and the value of P one-fourth cycle earlier (renamed Q) form a Cartesian-coordinate pair representing the input signal as a phasor (P, Q). The phasor representations of the input signals are processed in the relay and fault locating algorithms. They are available as part of the system output in response to an event. The data can be used to construct phasor diagrams of the voltages and currents.

INITIAL CHECKOUT
TABLE OF CONTENTS

Equipment Required 2-1
Checkout Procedure 2-1

TABLES

Table 2.1: Fault Locator Test Values 2-4
Table 2.2: Output Contact and Target LED Results 2-5

INITIAL CHECKOUT

The initial checkout of the SEL-221S relay is intended to familiarize you with the instrument, and to ensure that it is operational.

EQUIPMENT REQUIRED

The following equipment is necessary for initial checkout of the SEL-221S relay.

1. Computer terminal with EIA RS-232-C serial interface.

2. Interconnecting cable between terminal and SEL-221S relay.

3. Source of control power.

4. Source of three-phase voltages and at least two currents.

CHECKOUT PROCEDURE

In the procedure below, you use several of the SEL-221S relay commands. These commands are described in detail in Section 4: COMMANDS AND SERIAL COMMUNICATIONS. However, the following detail should allow you to complete the checkout without referring to the detailed descriptions.

1. Inspect the instrument for physical damage such as dents or rattles.

2. Connect a computer terminal to PORT 2 on the front or rear panel of the relay. The terminal should be configured to 2400 baud, eight data bits, two stop bits and no parity. Be sure your terminal is compatibly configured. Additional details on the port configurations are given in the FUNCTIONAL DESCRIPTION Section. Baud rate selection is described in the EIA RS-232-C Jumpers subsection of the JUMPER SELECTION Section of the INSTALLATION Chapter of this manual.

3. Connect a frame ground to terminal marked GND on the rear panel, and connect control power to terminals marked + and -.

4. Turn on the power. The enable target (EN) will illuminate. (If not, be sure that power is present and check the fuse or fuses.) The following message should be displayed on the terminal.

```
Example 230 kV Line                Date: 1/1/92        Time: 01:01:44

SEL-121S
=
```

Since a loss-of-potential condition is enabled to assert the ALARM relay output contacts (LOPA = Y), the ALARM relay stays asserted until voltages are present at the voltage input terminals. (If no message is received, then check the configuration of the terminal. If the problem persists, turn off the power and refer to the TROUBLESHOOTING Guide.)

The equal sign is a prompt which indicates that communications with the relay are at Access Level 0, the lowest of the three levels of access to the relay. The only allowable command at this level is ACCESS, which allows access to Level 1, as described below.

5. Enter the command **ACCESS** and press the **<ENTER>** key. In response to the prompt, enter the password **OTTER** and press **<ENTER>**. The prompt => should appear, indicating communications at Access Level 1 are established.

6. The relay is shipped with demonstration settings which can be inspected using the SHOWSET command. Type **SHOWSET**, and press **<ENTER>** to inspect these settings. The following will display:

```
=>SHOWSET <ENTER>

Settings:  Example 230 kV Line

R1   =13.90    X1   =79.96    R0   =41.50    X0   =248.57   LL=100.00
CTR  =200.00   PTR  =2000.00  MTA  =80.80
79OI =40.00    79RS =240.00   A1TP =0.00     A1TD =0.00
Z1%  =80.00    Z2%  =120.00   Z3%  =150.00
Z2DP =30.00    Z2DG =20.00    Z3D  =40.00
50NG =100.00   50P  =200.00   50H  =3000.00
51NP =100.00   51NTD=3.00     51NC =2        51NTC=Y
67NP =1200.00  67ND =10.00    67NTC=Y
52BT =30.00    POD  =60.00    LOPE =Y        LOPA =Y
TIME1=5        TIME2=0        AUTO =2        RINGS=3

Logic settings:

MTU  MPT  MTO  MA1  MRI  MRC
F3   FF   FF   FF   C0   33
50   50   50   50   00   50
00   00   00   00   00   08
```

A brief line-by-line description of the settings follows:

Line 1: Positive- and zero-sequence impedances of the transmission line (primary ohms), and the line length (miles) for which the impedances are given.

Line 2: Current transformer and potential transformer ratios, and maximum torque angle.

Line 3: Reclosing open interval delay and reset delay, and output contact A1 pickup and dropout delays.

Line 4: Zone 1, 2, and 3 reach as a percent of the positive-sequence line impedance.

Line 5: Zone 2 delays for phase and ground faults, and Zone 3 delay for both phase and ground faults.

Line 6: Sensitive residual or phase overcurrent element, phase overcurrent element and high-set phase overcurrent element pickup thresholds.

Line 7: Residual time-overcurrent pickup, time dial, curve index and torque control enable.

Line 8: Residual overcurrent pickup, time delay, and torque control enable.

Line 9: 52B time delay, pole open time delay, loss-of-potential (LOP) enable, and loss-of-potential alarm enable.

Line 10: PORT 1 and 2 timeouts, the autoport for automatically transmitted messages, and the number of rings after which the modem automatically answers.

A complete description of the settings appears under the SET command description.

A detailed explanation of the logic settings is given in the description of the LOGIC command. Each column in the logic settings display shows the masks for the three sections of the Relay Word as follows:

Row 1, of any column:	Z1P	Z1G	Z2PT	Z2GT	Z3P	Z3G	Z3T	50H
Row 2, of any column:	67NP	67NT	51NP	51NT	50NG	50P	50G	32Q
Row 3, of any column:	FDS	3P21	LOP	52BT	IN1	PO	3PT	*

The logic settings are shown in hexadecimal format. A table and example of hexadecimal to binary conversion is shown in the COMMAND DESCRIPTIONS Section under the "SHOWSET" command description.

7. Turn the power off and connect a source of three-phase voltages to the relay at terminals marked VA, VB, VC, and VN. Apply 67 volts per phase (line-to-neutral) in positive-sequence. Wye-connect the two current sources to generate balanced positive-sequence currents. Connect A and B current sources to the dotted A and B current input terminals. Connect the undotted A and B current input terminals both to the undotted C current input terminal. Connect the dotted C current input terminal to both the A and B current source returns. Set the A-phase current source to 2 amperes, at the same angle as the A-phase voltage. Set the B-phase current source to 2 amperes, at the same angle as the B-phase voltage.

8. Turn the relay power back on, execute the ACCESS command, and enter the password **OTTER** again. With potentials applied to the relay, the ALARM relay should now open.

9. Now use the METER command to measure the voltages and currents. With applied voltages of 67 volts per phase, and a potential transformer ratio of 2000, the displayed voltages should be 134 kV. With applied currents of 2.0 amperes per phase and a current transformer ratio of 200, the displayed currents should be 400 amperes. Furthermore, all line-to-line quantities should be balanced, differing from the line-to-neutral measurements by a factor of 1.73.

10. Test the digital relay/fault locator with the voltages and currents listed below. They were obtained assuming a source impedance of 0.2 times the total 100-mile line impedance, and radial feed, for faults at the indicated locations and types. A BASIC program is included in Section 7: MAINTENANCE AND TESTING, which you may find useful for computing test set settings.

Table 2.1: Fault Locator Test Values

LOCATION	TYPE	VA	VB	VC	IA	IB	IC	UNITS
75 miles	AG	52.89	70.12	70.06	5.11	0.00	0.00	V or A
		0.00	-124	124	-80	0.00	0.00	Degrees
	BC	67.00	56.75	56.75	0.00	7.53	7.53	V or A
		0.00	-126	126	0.00	-170	10	Degrees
85 miles	AG	54.24	69.81	69.76	4.62	0.00	0.00	V or A
		0.00	-124	124	-80	0.00	0.00	Degrees
	BC	67.00	57.69	57.69	0.00	6.81	6.81	V or A
		0.	-125	125	0.00	-170	10	Degrees
125 miles	AG	57.76	69.00	68.97	3.35	0.00	0.00	V or A
		0.00	-123	123	-80	0.00	0.00	Degrees
	BC	67.00	60.20	60.20	0.00	4.93	4.93	V or A
		0.00	-124	124	0.00	-170	10	Degrees

The faults at 75 miles are within Zone 1, since Zone 1 reach is set to 80.0% of a 100-mile line. (See Z1% setting in Step 6 above.) The faults at 85 miles are beyond Zone 1, but within the 120-mile setting of Zone 2. (See Z2% setting in Step 6 above.) The faults at 125 miles are beyond Zone 1 and Zone 2, but within Zone 3, set to 150 miles. (See Z3% setting in Step 6 above.)

The faults listed above should cause certain combinations of output relays to assert and front panel LEDs (TARGET 0) to illuminate as long as the breaker is closed before applying the fault. The output relays will remain asserted as long as the fault condition persists. These results are shown in the following table.

Table 2.2: Output Contact and Target LED Results

LOCATION	TYPE	OUTPUT RELAYS	TARGET LED
75 mi	AG	TRIP, TRIPA, A1	**A, G, Zone 1**
75 mi	BC	TRIP, TRIPA, TRIPB, TRIPC, A1	**B, C, Zone 1**
85 mi	AG	TRIP, TRIPA, A1	**A, G, Zone 2**
85 mi	BC	TRIP, TRIPA, TRIPB, TRIPC, A1	**B, C, Zone 2**
125 mi	AG	TRIP, TRIPA, A1	**A, G, Zone 3**
125 mi	BC	TRIP, TRIPA, TRIPB, TRIPC, A1	**B, C, Zone 3**

The output relay A1 at terminals is set to issue permissive trip for any Zone 1 fault, Zone 2 fault, Zone 3 fault, residual overcurrent trip (67NT), residual time-overcurrent trip (51NT), and high-set phase overcurrent pickup (50H). From the table, output relay A1 will assert for all of the faults.

For the Zone 1 ground fault, the Zone 1 target (1) and the targets for A-phase (A) and ground (G) illuminate. In general, the displayed targets are selected from the picked-up relay elements at the quarter-cycle at which the TRIP output is first asserted. In this sense, the targets show which element(s) actually caused the TRIP, even though other elements may also time out after that. The Zone 2 ground fault illuminates targets 2, A, and G if the fault persists for Zone 2 time (Z2DG). The Zone 3 ground fault illuminates targets 3, A, and G if the fault persists for Zone 3 time (Z3D).

For the Zone 1 phase fault, the Zone 1 target (1) and the targets for phase B (B) and phase C (C) illuminates. From the table, the 2, B, and C LEDs illuminate for Zone 2 phase B to phase C faults, and the 3, B, and C LEDs illuminates for the BC-phase fault in Zone 3.

Faults generate a short event report that is transmitted to the designated auto port. To see the full event report for the most recent fault, type **EVENT 1** and press **<ENTER>**. The report provides an eleven cycle record of the currents, voltages, relay element states, and the states of all contact inputs and outputs. The twelve newest reports are saved.

This checkout procedure demonstrates only a few of the features of the relay. Study Section 3: FUNCTIONAL DESCRIPTION, Section 4: COMMANDS AND SERIAL COMMUNICATIONS, and Section 5: EVENT REPORTING of this manual to obtain a complete understanding of the relay capabilities.

FUNCTIONAL DESCRIPTION
TABLE OF CONTENTS

Introduction 3-1
Inputs and Outputs 3-1
Definition of Logic Variables 3-5
Intermediate Logic 3-7
Relay Word 3-9
Output Equations 3-11
Reclosing Relay 3-13
Fault Type Selection 3-13
Targets 3-14
Self Tests 3-14
Setting Procedure 3-16
Event Report 3-17
Fault Locator 3-17
Mho Units 3-20
Directional Element 3-21
Relay Element Operating Time Curves 3-22
Residual Overcurrent Element 3-23
Residual Time-Overcurrent Element and Curves 3-23
Time-Overcurrent Curve Equations 3-24
Logic Diagrams 3-29

TABLES

Table 3.1: Relay Word 3-9
Table 3.2: Relay Word Bit Summary Table 3-10
Table 3.3: Power Supply Self Test Limits 3-15

FIGURES

Figure 3.1: Mho Element Reach at Maximum Torque Angle 3-20
Figure 3.2: Phase and Ground Distance Element Speed Curves 3-22
Figure 3.3: Residual Time-Overcurrent Element Moderately Inverse Time Characteristic (Curve 1) 3-25
Figure 3.4: Residual Time-Overcurrent Element Inverse Time Characteristic (Curve 2) . . . 3-26
Figure 3.5: Residual Time-Overcurrent Element Very Inverse Time Characteristic (Curve 3) 3-27

Figure 3.6: Residual Time-Overcurrent Element Extremely Inverse Time Characteristic (Curve 4) 3-28
Logic Diagrams 3-29

FUNCTIONAL DESCRIPTION

INTRODUCTION

This section describes all relay inputs and outputs, relay elements, and the logic equations which relate the inputs, outputs and relay elements.

It also describes the self tests and their effects on system operation.

INPUTS AND OUTPUTS

Serial Interfaces

The SEL-221S relay is equipped with two EIA RS-232-C serial communication ports. PORT 2 has nine-pin connectors on both the front and rear panels, designated PORT 2F and PORT 2R, respectively.

PORT 2R, located on the relay rear panel, is typically used with an SEL-DTA Display/Transducer Adapter, SEL-RD Relay Display, or local printer. PORT 2F is always available for short term local communications with a portable computer or printing terminal. Simply plug the device into the front panel port. The relay automatically discontinues communications with PORT 2R and addresses PORT 2F. When testing or data retrieval is complete, unplug the temporary device from PORT 2F. The relay automatically resumes communication with the device connected to PORT 2R.

Serial communications PORT 1 and the Auxiliary Input for demodulated IRIG-B time code input remain on the relay rear panel.

The baud rate for each port is set by jumpers near the front of the main board. You can access these jumpers by removing either the top cover or front panel. Available baud rates are 300, 600, 1200, 2400, 4800, or 9600.

Caution: Do not select two baud rates for the same port as this can damage the relay baud rate generator. The relay is shipped with PORT 1 set to 300 baud and PORT 2 set to 2400 baud.

The SEL-121S relay does not include a front panel connector for PORT 2.

The serial data format is:

Eight data bits
Two stop bits
No parity

Input Power

Terminals marked + and - should be connected to a source of control voltage. Polarity of dc power is unimportant. Power requirement is about 12 watts. Terminal marked GND should be wired to the relay rack ground reference for grounding the instrument frame.

Contact Inputs

Six input circuits are provided. They are listed below:

Programmable Input 1	52A Monitor - B-Phase
Permissive Trip	52A Monitor - C-Phase
52A Monitor - A-Phase	External Trigger

To assert an input, nominal control voltage is applied to the appropriate terminal pair. Polarity is unimportant. The table below shows input parameters.

Logic Input Rating	Contact Input Range	Current at Nominal Voltage
24 Vdc	10 - 30 Vdc	4 mA
48 Vdc	25 - 60 Vdc	4 mA
125 Vdc	60 - 200 Vdc	4 mA
250 Vdc	200 - 280 Vdc	4 mA

The functions of the inputs are explained below.

Programmable Input 1 (IN1):

The IN1 input is programmable using the LOGIC command. For example, program this input for direct tripping in the MTU logic mask, and the TRIP output closes unconditionally when the IN1 input is asserted. This input also triggers an event report.

Permissive Trip (PT):

The PT input is normally used in permissive transfer tripping schemes. When it asserts, an event is triggered and additional tripping conditions are allowed, as selected in the logic setting procedure. (See the LOGIC MPT command.)

Circuit Breaker Monitor (52AA):

The 52AA input indicates the state of the A-phase pole of the breaker, and is used by the tripping, closing, reclosing, and single-pole logic functions.

Circuit Breaker Monitor (52AB):

The 52AB input indicates the state of the B-phase pole of the breaker, and is used by the tripping, closing, reclosing, and single-pole logic functions.

Circuit Breaker Monitor (52AC):

The 52AC input indicates the state of the C-phase pole of the breaker, and is used by the tripping, closing, reclosing, and single-pole logic functions.

External Trigger for Event Report (EXT):

The relay generates an event report whenever the external trigger input is asserted. Asserting this input does not influence the protective functions in any way.

Relay Outputs

Seven output relays are provided. They are listed below with their contact types.

Output Relay	Contact Type
TRIP	a
CLOSE	a or b
A1	a or b
TRIPA	a or b
TRIPB	a or b
TRIPC	a or b
ALARM	a or b

All relay contacts are rated for circuit breaker tripping duty.

TRIP Output:

This output closes for any number of conditions selectable by the user. The conditions are grouped as follows: unconditional, subject to PT input assertion, and subject to any breaker pole being open. The TRIP output never closes for less than 60 ms. After this interval, it opens when the fault condition vanishes and the breaker appears open as judged by the 52AA, 52AB, and 52AC inputs.

CLOSE Output:

This output asserts for reclose operations and in response to the CLOSE command. It deasserts when the 52AA, 52AB, and 52AC inputs are all asserted, or after the reclosing relay reset interval, whichever occurs first.

TRIPA Output:

This output asserts for a number of conditions selected by the user. The TRIPA output asserts for all conditions that the general TRIP output asserts for, except for faults detected as B-phase-ground or C-phase-ground in the overreaching Zone 3. The TRIPA output never asserts for less than 60 ms, and after this minimum time interval, it only deasserts when the fault condition vanishes and the A pole of the breaker appears open as judged by the 52AA input, or when the target reset button is pushed, causing all trip outputs to unlatch.

TRIPB Output:

This output asserts for a number of conditions selected by the user. The TRIPB output asserts for all conditions that the general TRIP output asserts for, except for faults detected as A-phase ground or C-phase ground in the overreaching Zone 3. The TRIPB output never asserts for less than 60 ms, and after this minimum time interval, it only deasserts when the fault condition vanishes and the B pole of the breaker appears open as judged by the 52AB input, or when the target reset button is pushed, causing all trip outputs to unlatch.

TRIPC Output:

This output asserts for a number of conditions selected by the user. The TRIPC output asserts for all conditions that the general TRIP output asserts for, except for faults detected as A-phase ground or B-phase ground in the overreaching Zone 3. The TRIPC output never asserts for less than 60 ms, and after this minimum time interval, it only deasserts when the fault condition vanishes and the C pole of the breaker appears open as judged by the 52AC input, or when the target reset button is pushed, causing all trip outputs to unlatch.

A1 Programmable Output:

This output may be assigned to any combination of the bits in the Relay Word. A settable time delayed pickup and dropout is provided (A1TP, A1TD).

ALARM Output:

The ALARM output asserts for the following conditions:

Three unsuccessful Level 1 access attempts: 1 second pulse
Any Level 2 access attempt: 1 second pulse
Self test failures: permanent contact assertion for failure states or 1 second pulse for warning states.
Loss-of-potential condition, if ALARM for LOP is enabled (LOPA=Y): permanent contact assertion while LOP persists

The ALARM output also asserts momentarily when settings and passwords are changed or when a date is entered (see the DATE command), if the present year stored in EEPROM is different than the year input.

Potential Inputs

The potential inputs should be driven from a set of three potential transformers with their primaries connected in a grounded-wye configuration, and their secondaries connected in four-wire wye. Inside the relay is a set of three input transformers connected in four-wire wye. The nominal voltage rating for the potential inputs is 115 volts line-to-line, or 67 volts line-to-neutral.

Current Inputs

The rating of the input transformers in the relay is 15 amperes continuous, and 500 amperes for one second.

IRIG-B Input Description

The actual IRIG-B input circuit is a 56 ohm resistor in series with an opto-coupler input diode. The input diode has a forward drop of about 1.5 volts. Driver circuits should be designed to put approximately 10 mA through the diode when "on".

The IRIG-B serial format consists of a one second long, 100 pulse code divided into fields. The relay decodes the second, minute, hour and day fields.

When IRIG-B data acquisition is activated, either manually with the IRIG command or automatically, two consecutive frames are taken. The older frame is updated by one second, then the frames are compared. If the frames do not agree, the data are considered erroneous and discarded.

Automatic execution is invoked about once every five minutes, except about midnight on New Year's Eve. At this time IRIG-B data acquisition is halted so the system clock may implement the year change without interference from the IRIG-B clock.

DEFINITION OF LOGIC VARIABLES

The logic consists of relay elements, timers, and combinations of conditions. Many of these are recorded in a Relay Word, which is the heart of the programmable mask logic of this relay. Elements and other quantities which are available in the Relay Word are indicated in boldface type in this section of the manual.

Since so many binary variables are involved, we define the functioning using Boolean logic equations. Variables shown in boldface are settable by the user or can be selected by one of the six logic masks.

Relay Elements

Single-phase overcurrent relays	50AG 50BG 50CG	(**50NG** setting)
	50AP 50BP 50CP	(**50P** setting)
High-set single-phase OC relays	50AH 50BH 50CH	(**50H** setting)
Zone 3 ground mho distance	21AG3, 21BG3, 21CG3	(Z3% setting)
Zone 3 phase mho distance	21AB3, 21BC3, 21CA3	
Zone 2 ground mho distance	21AG2, 21BG2, 21CG2	(Z2% setting)
Zone 2 phase mho distance	21AB2, 21BC2, 21CA2	
Zone 1 ground mho distance	21AG1, 21BG1, 21CG1	(Z1% setting)
Zone 1 phase mho distance	21AB1, 21BC1, 21CA1	
Residual time-overcurrent pickup	**51NP**	
Residual time-overcurrent trip	**51NT**	(**51NP,** 51NTD, 51NC, 51NTC settings)
Residual overcurrent pickup	**67NP**	
Residual overcurrent trip	**67NT**	(**67NP,** 67ND setting)
Residual inst overcurrent	50N	(**50NG** setting)
Negative-sequence directional	**32Q**	Forward direction
Negative-sequence overvoltage	47QL	V2 > 14V loss-of-potential logic
Negative-sequence overcurrent	46QL	I2 > 0.083A loss-of-potential logic
Positive-sequence overvoltage	47P	V1 > 14V loss-of-potential logic

Contact Inputs

Programmable input	**IN1**	For dir. trip or other user rqmts.
Permissive trip	PT	For perm. transfer trip. schemes
Circuit breaker monitor, A-phase	52AA	
Circuit breaker monitor, B-phase	52AB	
Circuit breaker monitor, C-phase	52AC	
External trigger for event report	EXT	

Contact Outputs

Circuit breaker trip	TRIP	2 Outputs
Circuit breaker close	CLOSE	
Programmable output	A1	Includes TDPU/TDDO timer
Trip A pole	TRIPA	
Trip B pole	TRIPB	
Trip C pole	TRIPC	
System alarm	ALARM	Alarms for self tests, **LOP**, setting changes, and second-level access.

Logic Settings and Timers

Reclosing relay open interval	79OI	0-8000 cyc; 0 disables
Reclosing relay reset timer	79RS	60-8000 cyc
Zone 2 delay for phase faults	Z2DP	3-2000 cyc
Zone 2 delay for ground faults	Z2DG	3-2000 cyc
Zone 3 delay	Z3D	3-2000 cyc
Ground overcurrent delay	67ND	0-8000 cyc
Pole open disable delay	POD	0-8000 cyc
Direction (torque) control of **51N**	51NTC	
Direction (torque) control of **67N**	67NTC	
Switch-onto-fault time delay	**52BT**	0.5-10000 cyc
Loss-of-potential enable	LOPE	
Loss-of-potential ALARM enable	LOPA	
A1 contact output timer timeout	A1T	0-8000 cyc A1TP pickup delay 0-8000 cyc A1TD dropout delay

INTERMEDIATE LOGIC

The logic equations developed below represent combinations of the relay elements and other conditions. In the following equations the "*" indicates logical "and", and the "+" indicates logical "or."

Circuit-Breaker Contact Logic

52A3	=	52AA * 52AB * 52AC	
52B3	=	NOT(52AA) * NOT(52AB) * NOT(52AC)	
52BT	=	NOT(52A3)	Delayed by **52BT** time setting at pickup and dropout
PO	=	NOT(52A3) * NOT(POD)	Pole open (used to supervise forward mhos and to disable 67N and 51N during open interval but not longer than **POD**)
3PT	=	TA * TB * TC	Three-Pole Trip (used to detect a three-pole trip condition)

Loss-of-Potential Logic

Set **LOP** = 47QL * NOT(46QL) + NOT(47P) * NOT(**50P**) (Must be valid for three cycles to set)

Clear **LOP** = NOT(47QL) * (47P + NOT(52A3))

(The different set and clear conditions ensure **LOP** stays latched during subsequent faults, but is cleared when balanced voltages return.)

Overcurrent Conditions

50G	=	50AG + 50BG + 50CG	Sensitive phase overcurrent condition
50NG	=	50N + **50G**	Sensitive ground or phase o/c condition
50P	=	50AP + 50BP + 50CP	Phase overcurrent condition
3P50	=	50AP * 50BP * 50CP	Three-pole overcurrent condition
50H	=	50AH + 50BH + 50CH	High-level overcurrent condition
67NP	=	67N pickup * (**32Q** + (**LOP** * LOPE) + NOT(67NTC)) * NOT(**PO**)	
67NT	=	**67NP** * (**32Q** + (**LOP** * LOPE) + NOT(67NTC)) * 67ND	Directionally supervised residual overcurrent element (disabled when any pole open)
51NP	=	51N pickup * (**32Q** + (**LOP** * LOPE) + NOT(51NTC)) * NOT(**PO**)	Directionally supervised residual time-overcurrent element (disabled when any pole open)

Distance Relay Logic

3P21 = (21AB3*21BC3*21CA3) * 3P50 Three-phase fault condition

FDS = **3P21** + **32Q** Forward-direction supervision
+ TRIP output asserted
(inst. p.u./quarter-cycle d.o.)
+ **PO**

Z3P = (21AB3*50AP*50BP + 21BC3*50BP*50CP + 21CA3*50CP*50AP) * **FDS** * NOT(**LOP** * LOPE)
Z3G = (21AG3*50AG + 21BG3*50BG + 21CG3*50CG) * 50N * **FDS** * NOT(**LOP** * LOPE)

Z2P = (21AB2*50AP*50BP + 21BC2*50BP*50CP + 21CA2*50CP*50AP) * **FDS** * NOT(**LOP** * LOPE)
Z2G = (21AG2*50AG + 21BG2*50BG + 21CG2*50CG) * 50N * **FDS** * NOT(**LOP** * LOPE)

Z1P = (21AB1*50AP*50BP + 21BC1*50BP*50CP + 21CA1*50CP*50AP) * **FDS** * NOT(**LOP** * LOPE)
Z1G = (21AG1*50AG + 21BG1*50BG + 21CG1*50CG) * 50N * **FDS** * NOT(**LOP** * LOPE)

Z2PT = Z2P * Z2PD Zone 2 phase timeout
Z2GT = Z2G * Z2GD Zone 2 ground timeout
Z3T = (**Z3P** + **Z3G**) * Z3D Zone 3 timeout

Z3AG = 21AG3 * 50AG * 50N * **FDS** * NOT(**LOP** * LOPE)
Z3BG = 21BG3 * 50BG * 50N * **FDS** * NOT(**LOP** * LOPE)
Z3CG = 21CG3 * 50CG * 50N * **FDS** * NOT(**LOP** * LOPE)

RELAY WORD

Relay elements and intermediate logic results used in the relay are represented in a 24-bit Relay Word. You can select bits in this word to control outputs. The selected bits are stored in masks for each function. The user programs the bits in these masks with the LOGIC command.

Table 3.1: Relay Word

Z1P	Z1G	Z2PT	Z2GT	Z3P	Z3G	Z3T	50H
67NP	67NT	51NP	51NT	50NG	50P	50G	32Q
FDS	3P21	LOP	52BT	IN1	PO	3PT	*

The Relay Word Bit Summary Table (below) explains the meaning of each bit in the Relay Word. The "*" in the Relay Word indicates that the bit position is not used.

Table 3.2: Relay Word Bit Summary Table

Z1P	-	Zone 1 phase fault, instantaneous output (set by Z1%)
Z1G	-	Zone 1 ground fault, instantaneous output (set by Z1%)
Z2PT	-	Zone 2 phase fault, time delayed (set by Z2% and Z2DP)
Z2GT	-	Zone 2 ground fault, time delayed (set by Z2% and Z2DG)
Z3P	-	Zone 3 phase fault, instantaneous (set by Z3%)
Z3G	-	Zone 3 ground fault, instantaneous (set by Z3%)
Z3T	-	Zone 3 phase or ground fault, time delayed (set by Z3% and Z3D)
50H	-	High-set phase overcurrent condition (set by **50H**)
67NP	-	Residual overcurrent pickup (set by **67NP**)
67NT	-	Residual overcurrent time delayed trip (set by **67NP,** 67ND)
51NP	-	Pickup of residual time-overcurrent (set by **51NP** and 51NTC)
51NT	-	Timeout of residual time-overcurrent (set by **51NP,** 51NTD, 51NC, and 51NTC)
50NG	-	Sensitive residual or phase overcurrent condition (set by **50NG**)
50P	-	Phase overcurrent condition (set by **50P**)
50G	-	Sensitive phase overcurrent condition (set by **50NG**)
32Q	-	Negative-sequence directional element
FDS	-	Forward-direction supervision
3P21	-	Three-phase fault condition detected by phase distance relays
LOP	-	Loss-of-potential condition
52BT	-	Inverted 52A3 input delayed by **52BT** setting
IN1	-	Logic input 1 (use for direct trip, etc.)
PO	-	Pole open condition
3PT	-	Three-Pole Trip condition

The use of the Relay Word and programmable masks MTU, MPT, MTO, MRI, MRC, and MA1 provides the user with great flexibility in applying the relay, without rewiring panels or changing jumpers on circuit boards.

OUTPUT EQUATIONS

The logic for controlling the TRIP and A1 output relays is programmable for flexibility and for testing. The logic is programmed by setting masks for various conditions, which are applied to the Relay Word.

Let R = Relay Word

MTU = mask for trip (unconditional)
MPT = mask for trip (with permissive trip input asserted)
MTO = mask for trip (with breaker open)
MA1 = mask for programmable output A1 control

Then:

The programmable output, A1, is given as follows:

A1 = R * MA1 * A1T (Includes A1TP, A1TD settable pickup/dropout delays)

The three-pole trip output, TRIP, is programmable by the masks MTU, MPT, and MTO as follows:

TRIP = R * MTU
+ R * MPT * PT
+ R * MTO * **52BT**
+ TRIP (OPEN) Command

Close TRIP contact = TRIP
Open TRIP contact = NOT(TRIP) * [NOT(52A3) (1 cyc p.u./inst. d.o.) + TARGET RESET button pushed] * (60 ms minimum TRIP)

The single-pole trip outputs, TRIPA, TRIPB, and TRIPC are not individually programmable by the relay mask logic. However, they are indirectly dependent on the mask settings since the three-pole trip output, TRIP, must assert before any of the single-pole trip outputs can assert.

The equations below define operation of the TA, TB, and TC bits. These bits are used in combination with other functions to control the single-pole trip outputs.

TA = TRIP * [NOT(Z3BG + Z3CG) + Z1P + Z2PT + Z2GT + Z3T + 52BT + 79RS + 51NT + [Z3BG * NOT(52AA * 52AC)] + [Z3CG * NOT(52AA * 52AB)]] + TRIP (OPEN) COMMAND

TB = TRIP * [NOT(Z3AG + Z3CG) + Z1P + Z2PT + Z2GT + Z3T + 52BT + 79RS + 51NT + [Z3AG * NOT(52AB * 52AC)] + [Z3CG * NOT(52AA * 52AB)]] + TRIP (OPEN) COMMAND

TC = TRIP * [NOT(Z3AG + Z3BG) + Z1P + Z2PT + Z2GT + Z3T + 52BT + 79RS + 51NT + [Z3AG * NOT(52AB * 52AC)] + [Z3BG * NOT(52AA * 52AC)]] + TRIP (OPEN) COMMAND

All three bits assert when:

- The relay trips for a phase-phase or three-phase fault in Zone 1,
- The relay trips due to any time delayed element,
- The relay trips under switch-onto-fault conditions,
- The relay trips for operation of the residual time-overcurrent element,
- Any single-pole trips while any other single pole is open,
- Or the OPEN command is executed.

The bits assert individually if the TRIP condition asserts and ground distance elements for the remaining two phases are not asserted.

The TRIPA, TRIPB, and TRIPC conditions refer to operation of the single-pole trip outputs from the relay. The equations below define conditions under which each of the outputs close and open.

Close TRIPA contact = TA + (TB * TC)
Open TRIPA contact = [TRIPA * NOT(TRIPB + TRIPC) + (TRIPA * TRIPB * TRIPC * 52B3)] * NOT(TRIP) * [NOT(52AA) + Target Reset]

Close TRIPB contact = TB + (TA * TC)
Open TRIPB contact = [TRIPB * NOT(TRIPA + TRIPC) + (TRIPA * TRIPB * TRIPC * 52B3)] * NOT(TRIP) * [NOT(52AB) + Target Reset]

Close TRIPC contact = TC + (TA * TB)
Open TRIPC contact = [TRIPC * NOT(TRIPA + TRIPB) + (TRIPA * TRIPB * TRIPC * 52B3)] * NOT(TRIP) * [NOT(52AC) + Target Reset]

Each single-pole trip output closes and latches if a single-pole trip condition occurs or if the trip conditions associated with other two poles assert. Following a single-pole trip, the single-pole trip output unlatches when the TRIP condition vanishes, the breaker pole 52A input deasserts or the Target Reset button is pressed, and the 60 ms minimum trip timer expires.

If a three-pole trip is issued, the single-pole trip contacts unlatch when all three 52A inputs are deasserted.

The relay includes logic not described above which causes three-pole tripping to be initiated if a single-pole trip has occurred and a second single-pole trip is initiated before the first pole TRIP output opens.

The CLOSE output contact closes and open as follows:

Close CLOSE contact = (79OI expired + CLOSE command) * NOT(52A3) * NOT (TRIP)
Open CLOSE contact = NOT(CLOSE) + 79RS expired

The "*" symbol indicates logical "and", and the "+" indicates logical "or".

RECLOSING RELAY

The reclosing relay provides automatic reclosing for selectable fault types. The open interval and the reset timer are individually programmable.

To provide flexibility in applying the relay to various reclosing schemes, selecting conditions for reclose initiation and cancellation is similar to programming the output relays:

RI = R * MRI	MRI selects reclose initiate conditions from the Relay Word
RC = R * MRC	MRC selects reclose cancel conditions from the Relay Word

where MRI is the mask for reclose initiation, and MRC is the mask for reclose cancellation.

The open interval does not begin until the TRIP output deasserts. Since the TRIP output never asserts for less than 60 ms, the open interval may start several milliseconds after the fault has actually cleared and the breaker opened.

When the CLOSE output is asserted by the reclosing relay, it remains closed until either the 52A3 input is asserted (indicating that the breaker has closed three-pole) or until the 79RS reset interval expires.

The CLOSE output can also be used to trigger external reclosers.

FAULT TYPE SELECTION

The Fault Type Selection Logic uses the information obtained from the mho elements to determine the correct fault type. The Fault Type Selection Logic initially examines which mho elements (AB, BC, CA, A, B, C) are picked up. This information is often sufficient to determine fault type. If additional information is required, a compensated-torque check is performed, and the maximum torque element determines fault type. This method provides accurate fault type selection for all fault types and loading configurations.

TARGETS

The front panel targets illuminate for the conditions shown in the table.

Target LED	Conditions for Illumination
EN	Normal operation
A	A-phase involvement
B	B-phase involvement
C	C-phase involvement
G	Ground involvement
Zone 1	Zone 1 element assertion + 50H
Zone 2	Zone 2 faults
Zone 3	Zone 3 faults

The LEDs for the relay elements will illuminate on the rising edge of the TRIP output as follows:

A : For A-phase-ground, A to B-phase, and C to A-phase elements.
B : For B-phase-ground, A to B-phase, and B to C-phase elements.
C : For C-phase-ground, B to C-phase, and C to A-phase elements.
G : For all phase-ground elements, ground overcurrent, and ground time-overcurrent elements.
1 : For Z1G + Z1P + 50H
2 : For Z2GT + Z2PT, but not Zone 1 or 50H.
3 : For Z3G + Z3P + Z3T, but not Zone 2, Zone 1, or 50H.

At the inception of a new fault the target 0 LEDs are cleared, and the targets for the new fault are displayed.

To clear the targets, press the TARGET RESET button. All eight indicators illuminate for about one second, as a lamp test. After that, the fault targets are cleared, and the enable light shows the operational state of the relay again. Furthermore, pressing the TARGET RESET button unlatches the TRIP output from the 52A inputs. This feature is useful during relay testing, and it minimizes the risk of re-installing the relay with the TRIP output asserted.

SELF TESTS

The SEL-221S relay runs a variety of self tests which ensure reliable operation. This section describes each test and the steps taken if a self test fails. Some tests have warning and failure states, while some, such as the A/D test, only have failure states. Any change in self test status results in the generation of a status report.

Failure of any self test causes assertion of the ALARM contacts. Failures which disable the control functions also place the output relay driver port in an input mode so that no A-contact outputs may be asserted. All self tests are run on power up before the relay is enabled, or prior to enabling the relay after using the setting procedure. Afterwards all self tests are run at least every few minutes.

Offset

The offset voltage of each channel of the analog input electronics is measured and compared against fixed limits. The relay issues a warning when the offset is measured to be greater than 50 millivolts in any channel. A failure is declared when the offset exceeds 75 millivolts. The STATUS command format is used to display offset levels of all channels.

Power Supply

The power supply voltages are limit-checked. The table below summarizes the voltage limits.

Table 3.3: Power Supply Self Test Limits

Supply	Warning Thresholds		Failure Thresholds	
+5 V	+5.3 V	+4.7 V	+5.4 V	+4.6 V
+15 V	+15.8 V	+14.2 V	+16.2 V	+13.8 V
-15 V	-15.8 V	-14.2 V	-16.2 V	-13.8 V

The STATUS command response is transmitted for any failure or warning. A failure of the +5 volt supply causes all output relays to be de-energized and blocked from operation. A failure of the ±15 volt supplies disables protective relay functions, but does not disable control functions. The ALARM relay remains asserted for a power supply failure.

Random Access Memory

The random-access memory (RAM) is periodically checked to ensure that each byte can be written to and read from correctly. There is no warning state for this test. If a problem is detected, the STATUS command message is transmitted. It contains the socket designation of the affected RAM IC. Protective and control functions are disabled for a RAM failure, and the ALARM output relay contacts assert.

Read-Only Memory

The read-only memory (ROM) is periodically tested by computing a checksum. If the computed value does not agree with the stored value, a ROM failure is declared. The STATUS command response is transmitted, all protection and control functions are disabled, and the ALARM relay contacts assert.

Analog-to-Digital Converter

The analog-to-digital converter (ADC) changes voltage signals derived from the power system voltages and currents into numbers for processing by the microcomputer. The ADC test determines if the converter is functioning by checking its conversion time. If the conversion time is excessive, or if a conversion is started and never finishes, then the test fails. There is no warning state for this test. Failure of the ADC causes the protective functions to be disabled, but the control functions are retained. The STATUS command response is transmitted and the ALARM relay contacts assert if this test fails.

Settings

Two images of the system settings are stored in nonvolatile memory. These are compared when the relay is initially set, and periodically thereafter. Should the images ever disagree, the setting test fails, and all protection and control functions are disabled. The STATUS message is transmitted to indicate the failed test. The ALARM relay remains asserted for a setting failure.

SETTING PROCEDURE

Enter the settings for the relay using the SET and LOGIC commands, via either of the serial interface ports. The settings are stored in nonvolatile memory, so that they are retained when the power is off.

The SET and LOGIC command descriptions found in Section 4: COMMANDS AND SERIAL COMMUNICATIONS explain how to enter settings.

EVENT REPORT

The relay records an eleven-cycle event report following any of these events:

Zone 1 fault	Zone 2 fault	Zone 3 fault
51N pickup	Permissive Trip	command (TRIGGER, OPEN)
IN1 Input	50H pickup	67N pickup
External Trigger		

A second report is triggered for the same fault if the trip occurs after the first report expires, so the beginning and end of each fault for which the relay trips is recorded. (Note that reports are triggered at the 16th quarter-cycle of data.)

Timing of the triggering instant is recorded to the nearest quarter-cycle, so that the duration of long faults can be computed from the time the first report is triggered by the fault, and the time the second report is triggered by the trip. The reported event time corresponds to the 16th quarter-cycle of the event report, in all cases. The event report contains voltages, currents, system settings, and other information. It is described in detail in the EVENT REPORTING Section.

Execution of the CLOSE command does not trigger an event. The twelve most recent event reports are stored in memory, and may be retrieved using the EVENT command. A short history of the twelve most recent events is available using the HISTORY command.

FAULT LOCATOR

The relay fault locator is automatically triggered by any of several events. These events include pickup of certain relay elements, assertion of certain contact inputs or outputs, and user entered commands.

Specifically, the triggering events are:

(1) RELAY ELEMENTS (high level trigger)
Phase distance Zones 1, 2, or 3
Ground distance Zones 1, 2, or 3
Residual overcurrent element pickup
Residual time-overcurrent pickup
Phase overcurrent element 50H

(2) CONTACT INPUTS (rising edge trigger)
External Trigger
Programmable Input 1
Permissive Trip

(3) CONTACT OUTPUTS (rising edge trigger)
TRIP

(4) USER ENTERED COMMANDS (rising edge trigger)
TRIGGER
OPEN

Note that the fault locator is triggered by the relay elements in a level sensitive manner. Additional event reports are not generated when additional relay elements pick up. Only the first relay element of any contiguous sequence triggers an event report.

Furthermore, all triggering relay elements must drop out for at least four cycles before they may initiate another event report. (This helps eliminate triggering multiple records for boundary faults.)

All other triggering events are rising edge sensitive, meaning that for these events, additional reports are generated even while any or all relay elements remain picked up. This strategy permits, for example, the recording of fault clearing even when it occurs long after the initial event report is completed.

The fault location is always determined for event records in which any triggering relay elements are picked up, providing they are not picked up in the first seven rows of prefault data, or only in the last five rows of the event report. Furthermore, whenever the locator is able to determine the fault location, the corresponding record is labeled according to fault type, regardless of what actually triggered the event report. On the other hand, event records taken when no triggering relay elements are picked up are labeled as follows:

"EXT" for reports triggered externally by the input contacts, or by the "TRIGGER" command.

or

"TRIP" for reports triggered by the assertion of the "TRIP" output contact.

The actual fault location algorithm is composed of two steps. First the fault type must be determined, and then the location calculated.

For the event reports, the fault type is determined independently of the relay element operations. Only the indicated zone is determined by relay elements, whereas the involved phases are determined by fault current comparison. (This is different from the TARGET data, which is completely derived from relay element operations.)

The compared currents are taken from the two rows at the middle of the stored fault data. If the uncompensated current magnitudes are in large ratios between phases (4:1 or more), then the fault type becomes immediately apparent as single- or two-phase. If not, the same current is load compensated by the two corresponding prefault current rows in the first cycle of the event report. If these fault current component magnitudes are in moderate ratios (1.5:1 or more), then the fault type is taken as single- or two-phase, or if the ratios are all less than 1.5, then the fault type is taken as three-phase. The explicit fault classification logic is as

follows, where I values are uncompensated midfault currents, and IF values are midfault currents compensated for load, yielding true fault current components:

```
     IF (Imax  >  4 x Imed)   THEN Single-phase
ELSE IF (Imed  >  4 x Imin)   THEN Two-phase
ELSE IF (Ifmax > 1.5 x Ifmed) THEN Single-phase
ELSE IF (Ifmed > 1.5 x Ifmin) THEN Two-phase
ELSE IF (none of the above)   THEN Three-phase
```

This algorithm is largely immune to load and system grounding variations.

Once the fault type is determined, the fault locator employs the Takagi algorithm to locate the fault. Using both prefault and fault data, it compensates for the errors introduced by fault resistance in the presence of load flow. On the other hand, if no prefault data are provided by the event record, the relay gives a location based on a simple reactance measurement.

The fault locator depends on accurate transmission line parameters and instrument transformer ratios. Pay special attention to these potential sources of difficulty:

Instrument transformer ratio errors due to overburden by other devices.
Capacitive potential transformer capacitor value.
Transmission line parameter errors.

Although the fault-location computation takes several seconds, it handles faults in quick succession, such as those occurring in a reclosing sequence. This is because the fault data are stored and subsequently processed in turn. As an example, suppose three faults occur within a few seconds. The data from each is stored as it occurs. The fault-location computations begin with the first (oldest) fault and proceed until all three faults are processed. The summary event report is transmitted as soon as the corresponding fault location is available.

Shunt capacitance of the transmission line is not considered. The capacitance causes the fault location to appear less remote by, approximately, a factor of 1/cos(bL), where bL is the line length in radians at 60 Hz. One wavelength at 60 Hz is 3100 miles. For example, the line length of a 100-mile line in radians is:

$$(100/3100) \times 2 \times 3.14159 = 0.2027 \text{ radians}$$

The indication neglecting capacitance is about cos (0.2027) = 0.98 times the actual location, or about 2 miles short for a fault at the far end of a 100-mile line.

When compensation using shunt reactors is employed and the measured current equals the reactor current plus the line current, the shunt reactors reduce the errors due to neglecting the shunt capacitance of the transmission line.

When series capacitor compensation is used, fault location is accurate for faults between the relay and the capacitors, and beyond the capacitors if the capacitor protective gaps flash. If the gaps do not flash, the measured impedance includes the line impedance and the capacitance impedance, and the errors can be substantial. This problem is aggravated by high-speed clearing and the excitation of eigenmodes or resonances of the line-capacitor system which are close to 60 Hz. On the other hand, we have had success in cases where series capacitor gaps did not flash by recomputing the fault location from the event-report data, using a voltage equal to the measured voltage minus the capacitor voltage drop. We computed this voltage drop from the capacitance value and the measured current.

MHO UNITS

The mho circles are affected by these settings: maximum torque angle, set reach, the directional element 32Q, and transmission line (positive-sequence) angle and length. The circles pass through the impedance-plane origin, and the diameter passing through the origin is at an angle of MTA (maximum torque angle) with respect to the resistance axis. The chord passing through the origin at the positive-sequence impedance (Z1) angle of the transmission line has a length equal to the set reach. Therefore the mho circle diameter is:

$$\text{DIAMETER} = [\text{SET REACH}]/[\cos(\text{T. L. ANGLE} - \text{MTA})]$$

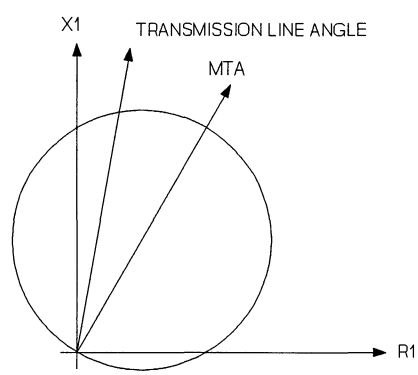

Figure 3.1: Mho Element Reach at Maximum Torque Angle

Six Zone 3 mho relay algorithms execute every one-fourth cycle. These encompass all possible fault types. Based on the operation of these six units, and a torque comparison of the mho elements picked up, the appropriate Zone 1 mho is run and the Zone 2 phase and ground timers start timing in the same quarter-cycle. If the fault is in Zone 1, then the appropriate Zone 1 mho element will operate instantaneously. If the fault is in Zone 2, then the appropriate Zone 2 mho element will operate after the appropriate Zone 2 timer, corresponding to the fault type (phase or ground), times out.

Line-to-line voltages and the current difference between associated phases are processed for each of the three types of phase faults. Line-to-ground voltages and residual-compensated line currents are used for the three types of ground faults.

Mho Element Polarization

The mho relay elements are polarized with positive-sequence voltages. The following table lists mho elements and their associated positive-sequence polarization voltage.

Mho Elements	Polarizing Quantity
AG, BC	VA1 (Phase A)
BG, CA	VB1 (Phase B)
CG, AB	VC1 (Phase C)

The positive-sequence polarization includes at least six cycles of memory, achieved by an infinite-impulse response (IIR) filter with a four-cycle time constant.

DIRECTIONAL ELEMENT

The negative-sequence directional element provides directional supervision of the residual overcurrent elements and adds directional security to the distance relay elements for all unbalanced faults.

The directional element is phasor-product derived from the negative-sequence voltage times the negative-sequence current, adjusted by the maximum torque angle setting.

RELAY ELEMENT OPERATING TIME CURVES

Figure 3.2 shows operating times for the relay phase and ground distance elements. For the distance element tests, a fault was applied at a location representing a percentage of the Zone 1 relay reach setting. At each reach percentage five tests were run. Tests were performed for source impedance ratios (SIR) of 0.1, and 1.0. The diagrams show maximum, average, and minimum operating times at each test point. Operating times include output contact closure time. No prefault load current was included. System frequency is 60 Hz.

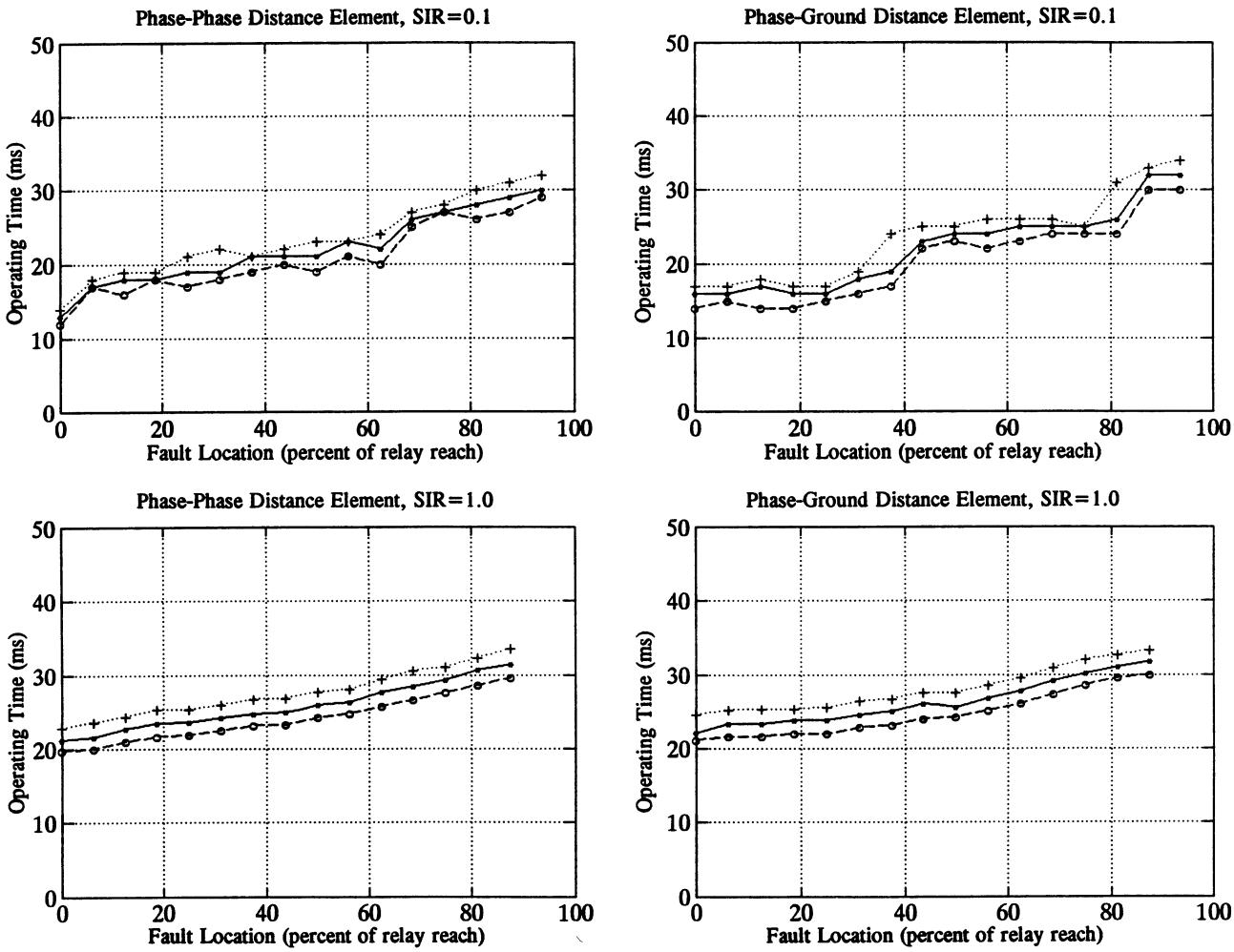

Figure 3.2: Phase and Ground Distance Element Speed Curves

RESIDUAL OVERCURRENT ELEMENT

The 67N overcurrent element provides either directional-forward or nondirectional protection (67NTC). The pickup (**67NP**) and trip (**67NT**) states are both available in the Relay Word for programming into any of the six masks.

The 67N overcurrent element is time delayed (67ND), with the delay settable from 0 to 8000 cycles in quarter-cycle steps.

RESIDUAL TIME-OVERCURRENT ELEMENT AND CURVES

The 51N time-overcurrent element provides either directional-forward or nondirectional protection. Its pickup (**51NP**) and trip (**51NT**) states are both available in the Relay Word for programming into any of the six masks.

The time dial and the curve shape are selected in the setting procedure. Four curve shapes are available. The curves and equations are given at the end of this section.

The 51N characteristic is formed by a recursive sum of the magnitude or magnitude-squared of the residual current, adjusted by the pickup setting.

The time dial setting determines the limit the recursive sum must reach for a trip.

TIME-OVERCURRENT CURVE EQUATIONS

Let t = operating time in seconds,
TD = time dial setting,
M = multiples of pickup.

Curve 1 -- Moderately Inverse

$$t_M = TD \left[0.157 + \frac{0.668}{M-1} \right] \quad \text{(sec.)}$$

Curve 2 -- Inverse

$$t_M = TD \left[0.180 + \frac{5.95}{M^2-1} \right] \quad \text{(sec.)}$$

Curve 3 -- Very Inverse

$$t_M = TD \left[0.0963 + \frac{3.88}{M^2-1} \right] \quad \text{(sec.)}$$

Curve 4 -- Extremely Inverse

$$t_M = TD \left[0.0352 + \frac{5.67}{M^2-1} \right] \quad \text{(sec.)}$$

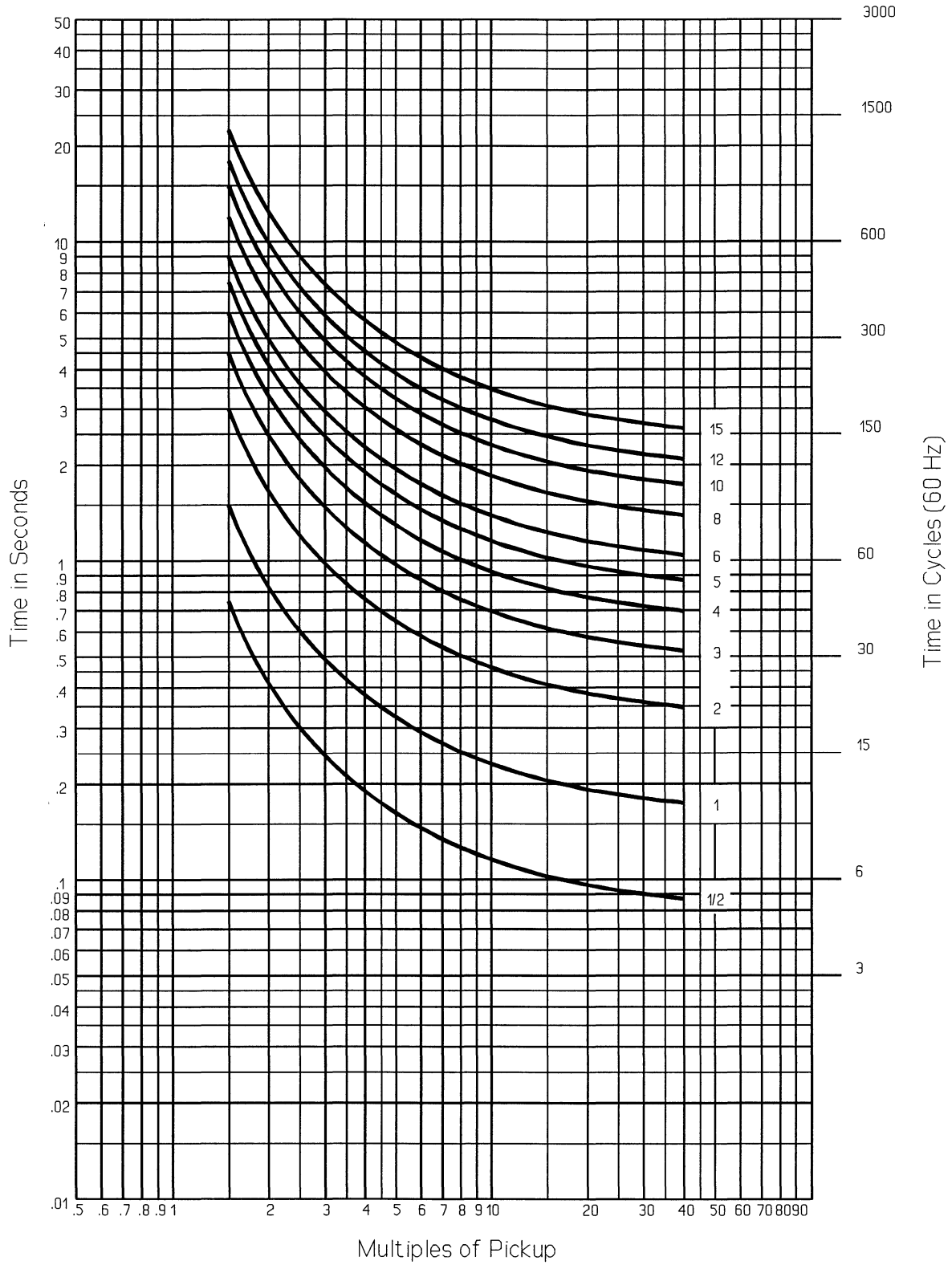

Figure 3.3: Residual Time-Overcurrent Element Moderately Inverse Time Characteristic (Curve 1)

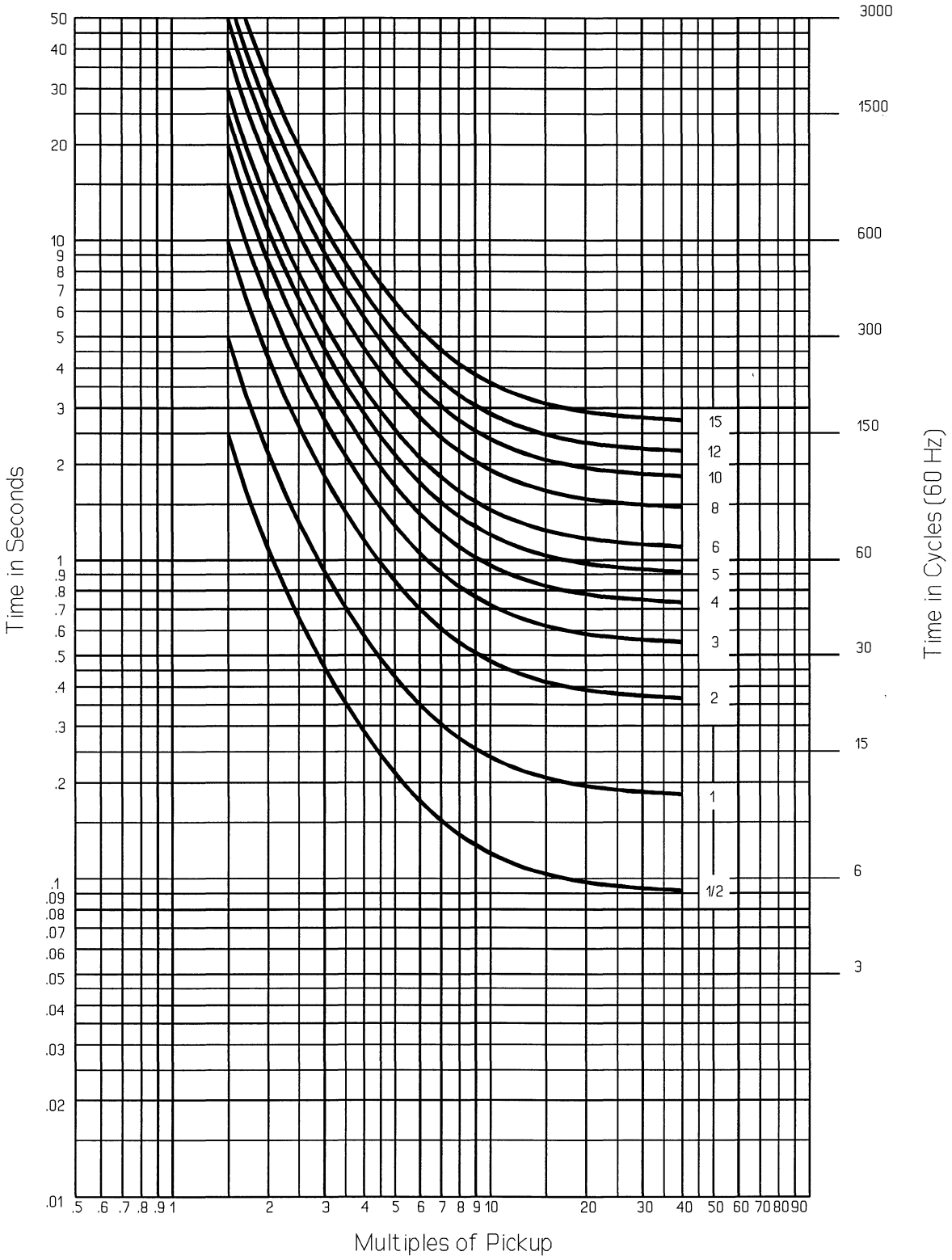

Figure 3.4: Residual Time-Overcurrent Element Inverse Time Characteristic (Curve 2)

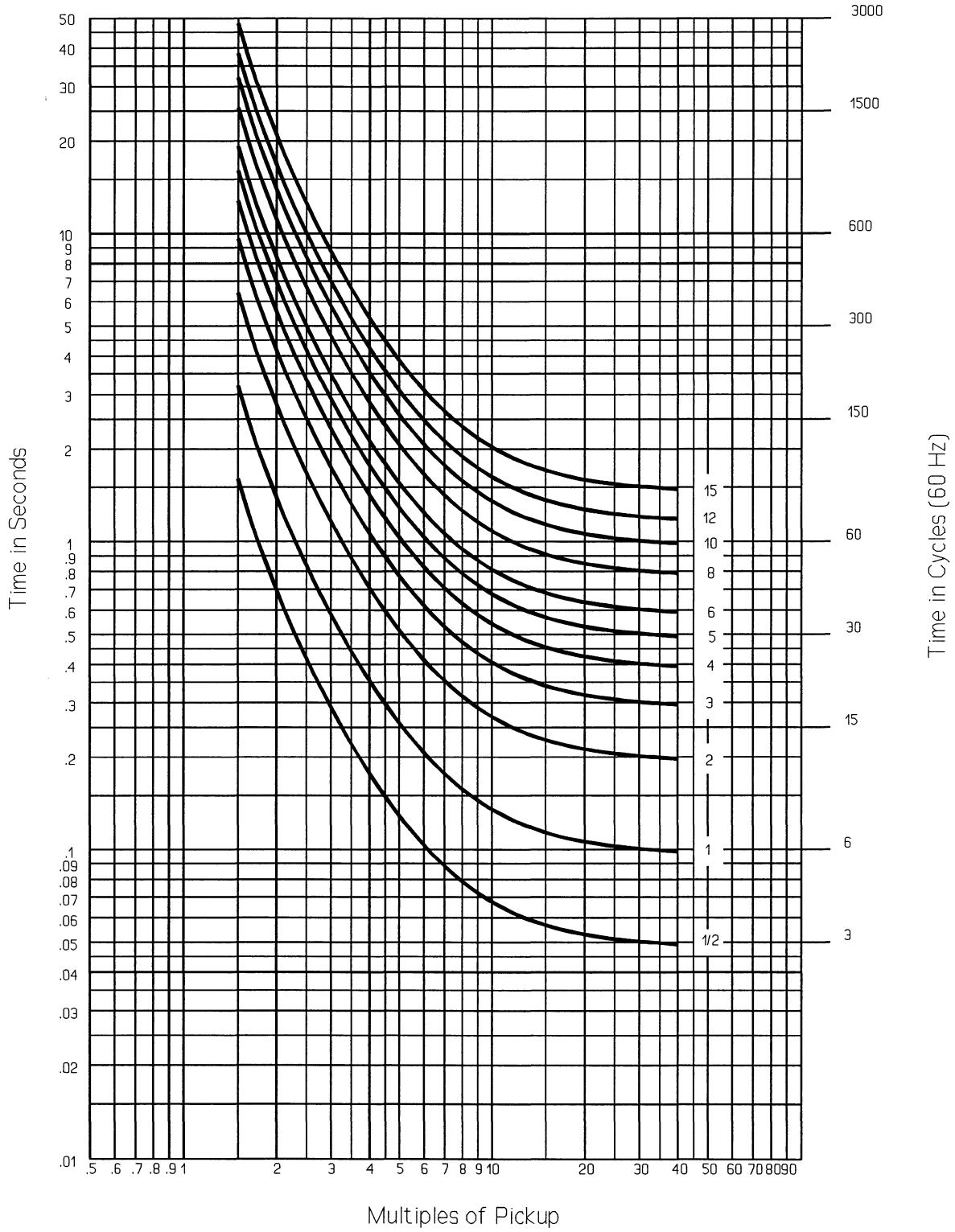

Figure 3.5: Residual Time-Overcurrent Element Very Inverse Time Characteristic (Curve 3)

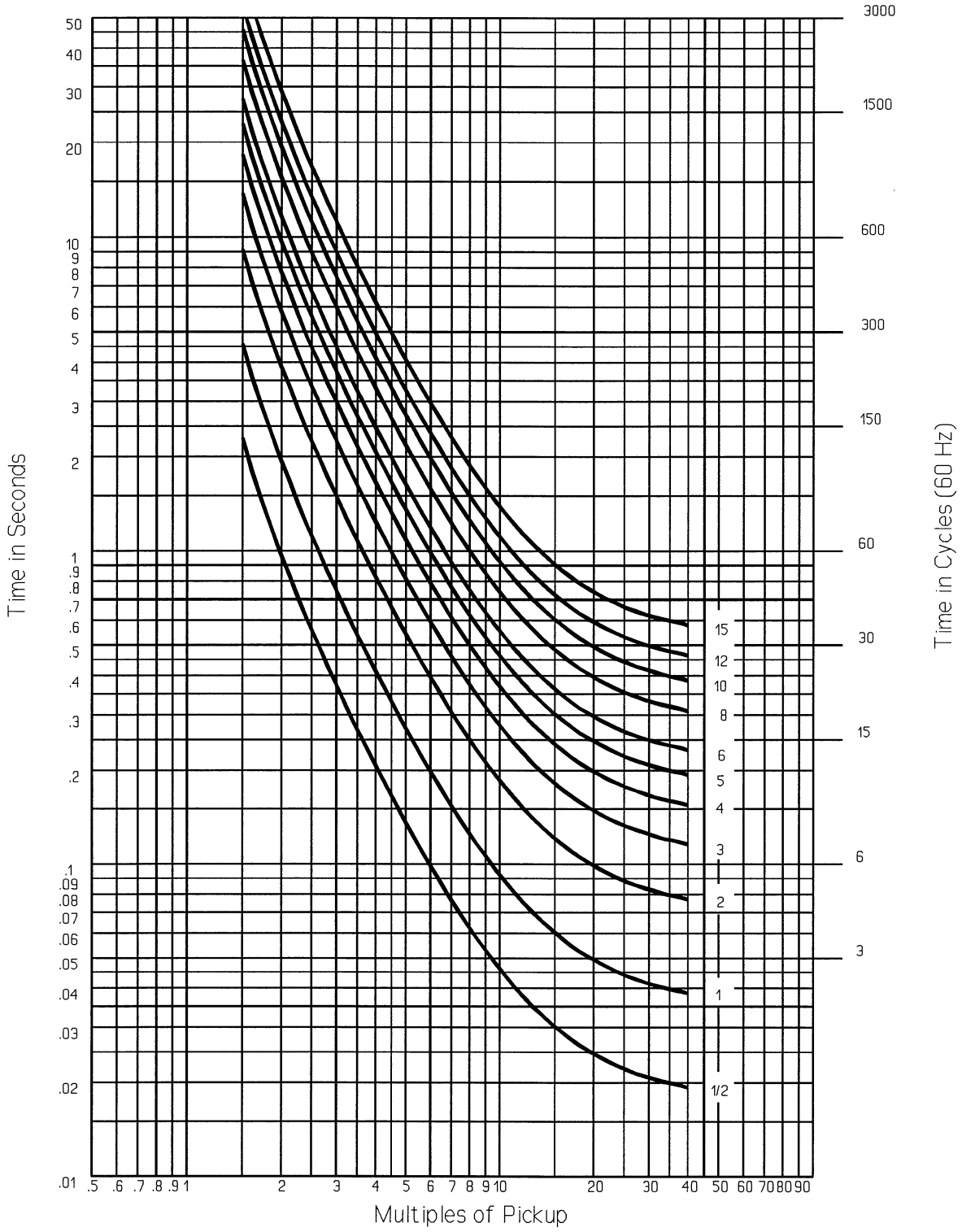

Figure 3.6: Residual Time-Overcurrent Element Extremely Inverse Time Characteristic (Curve 4)

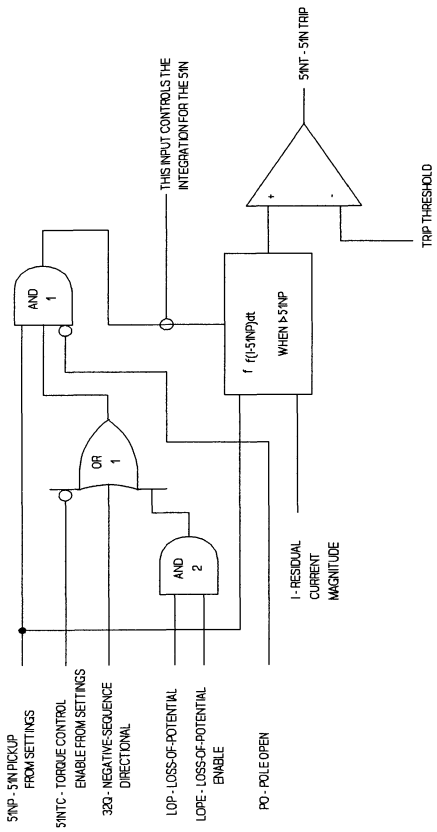

RESIDUAL TIME-OVERCURRENT (51N) LOGIC DIAGRAM

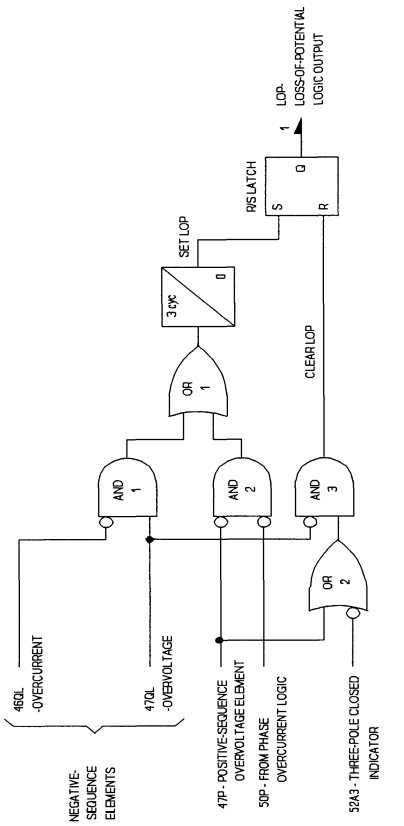

LOSS-OF-POTENTIAL LOGIC DIAGRAM

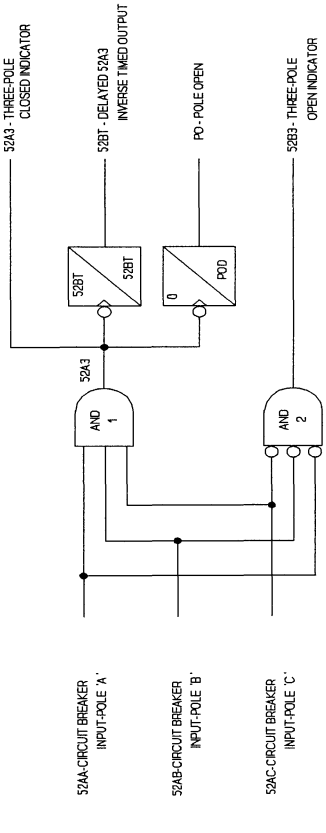

CIRCUIT BREAKER CONTACT

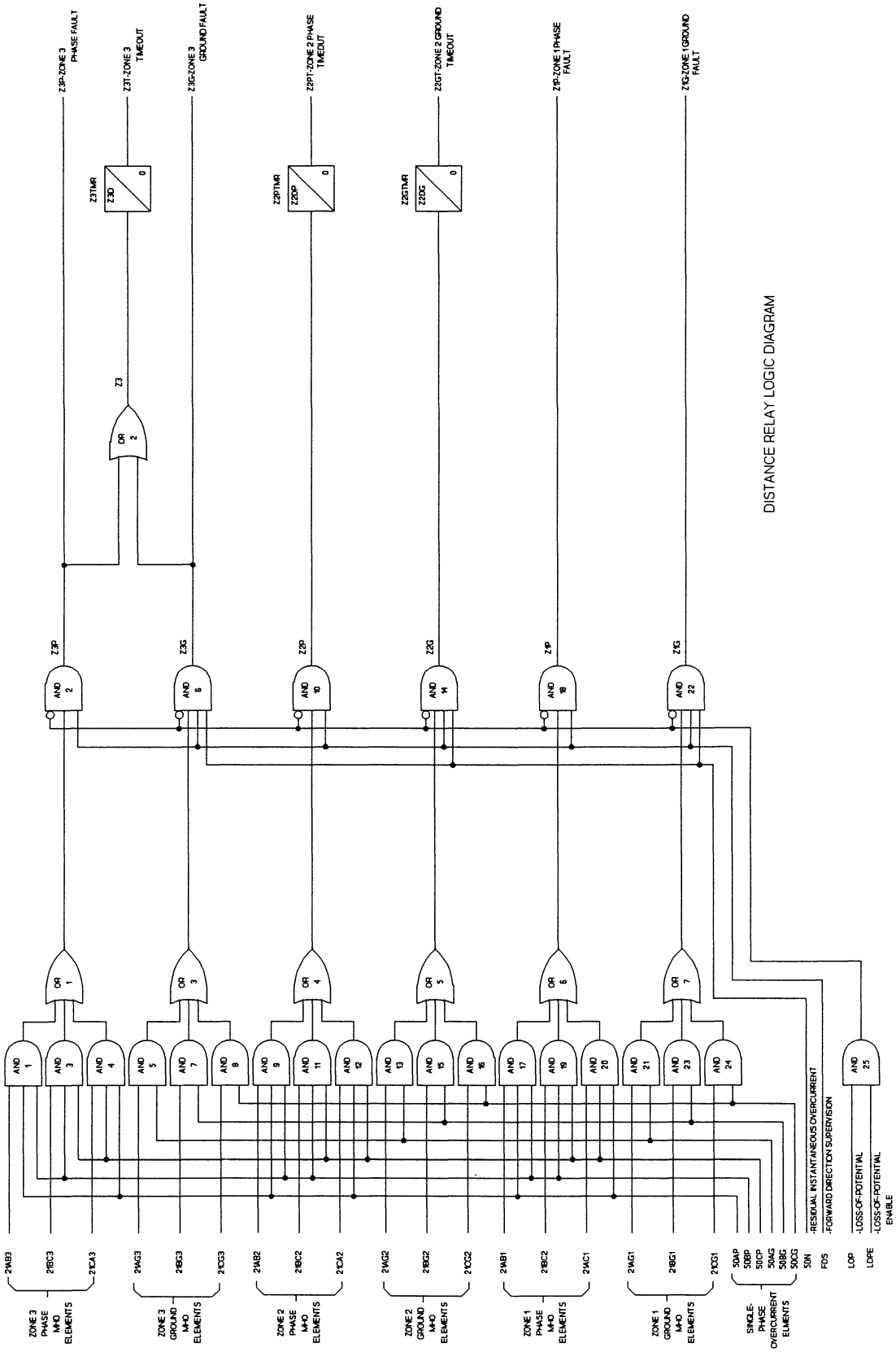
DISTANCE RELAY LOGIC DIAGRAM
Z3P-ZONE 3 PHASE FAULT
Z3T-ZONE 3 TIMEOUT
Z3G-ZONE 3 GROUND FAULT
Z2PT-ZONE 2 PHASE TIMEOUT
Z2GT-ZONE 2 GROUND TIMEOUT
Z1P-ZONE 1 PHASE FAULT
Z1G-ZONE 1 GROUND FAULT
Z3TMR
Z3D
Z2PTMR
Z2DP
Z2GTMR
Z2DG
Z3
Z3P
Z3G
Z2P
Z2G
Z1P
Z1G
-RESIDUAL INSTANTANEOUS OVERCURRENT
-FORWARD DIRECTION SUPERVISION
-LOSS-OF-POTENTIAL
-LOSS-OF-POTENTIAL ENABLE
ZONE 3 PHASE MHO ELEMENTS
ZONE 3 GROUND MHO ELEMENTS
ZONE 2 PHASE MHO ELEMENTS
ZONE 2 GROUND MHO ELEMENTS
ZONE 1 PHASE MHO ELEMENTS
ZONE 1 GROUND MHO ELEMENTS
SINGLE-PHASE OVERCURRENT ELEMENTS
50AP
50BP
50CP
50AG
50BG
50CG
50N
FDS
LOP
LOPE

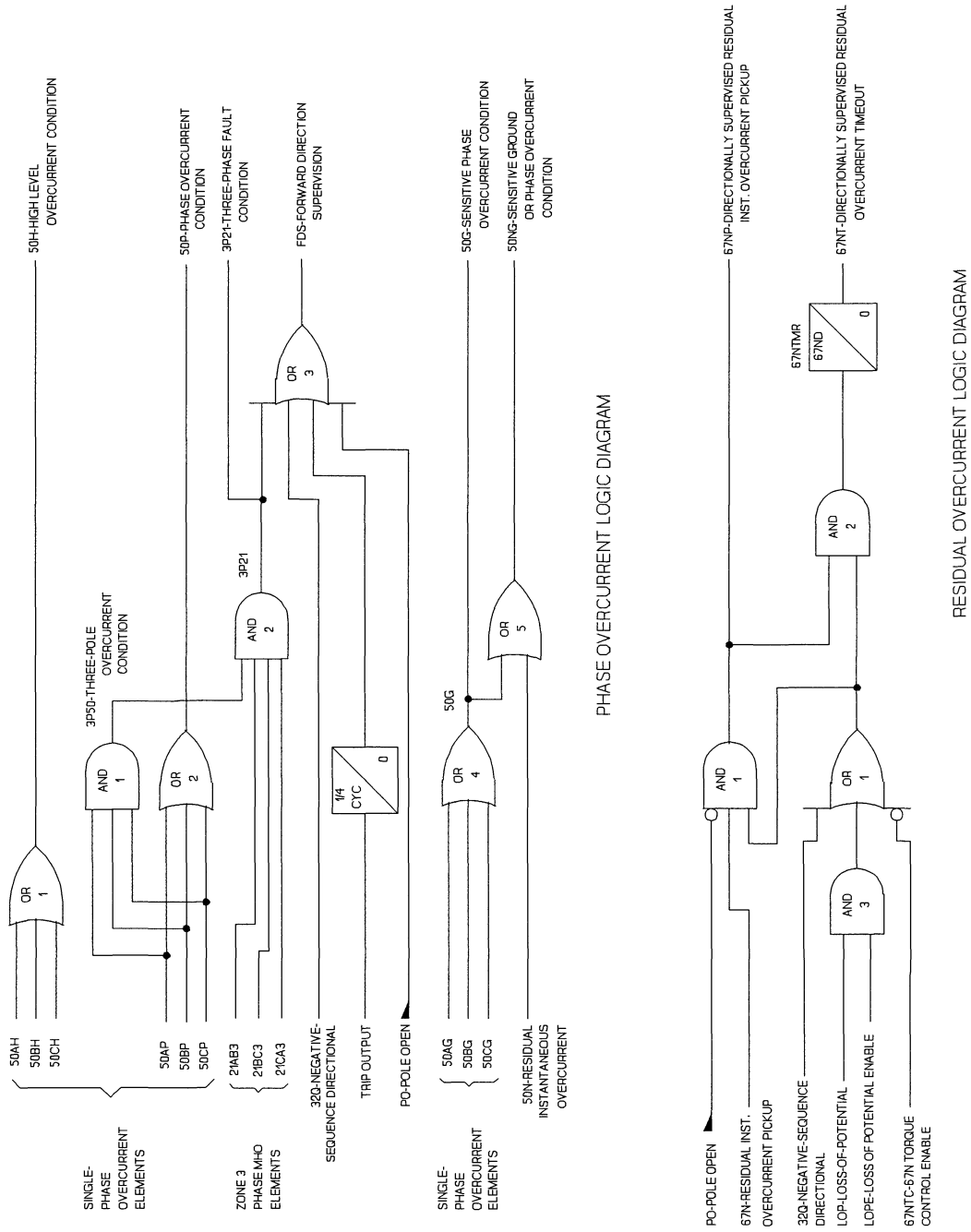
50H-HIGH LEVEL OVERCURRENT CONDITION
50P-PHASE OVERCURRENT CONDITION
3P21-THREE-PHASE FAULT CONDITION
FDS-FORWARD DIRECTION SUPERVISION
50G-SENSITIVE PHASE OVERCURRENT CONDITION
50NG-SENSITIVE GROUND OR PHASE OVERCURRENT CONDITION
3P50-THREE-POLE OVERCURRENT CONDITION
3P21
OR 3
AND 2
AND 1
OR 2
OR 1
1/4 CYC
0
50G
OR 4
OR 5
50AH
50BH
50CH
50AP
50BP
50CP
21AB3
21BC3
21CA3
32Q-NEGATIVE-SEQUENCE DIRECTIONAL
TRIP OUTPUT
PO-POLE OPEN
50AG
50BG
50CG
50N-RESIDUAL INSTANTANEOUS OVERCURRENT
SINGLE-PHASE OVERCURRENT ELEMENTS
ZONE 3 PHASE MHO ELEMENTS
SINGLE-PHASE OVERCURRENT ELEMENTS
PHASE OVERCURRENT LOGIC DIAGRAM
67NP-DIRECTIONALLY SUPERVISED RESIDUAL INST. OVERCURRENT PICKUP
67NT-DIRECTIONALLY SUPERVISED RESIDUAL OVERCURRENT TIMEOUT
67NTMR
67ND
0
AND 2
AND 1
OR 1
AND 3
PO-POLE OPEN
67N-RESIDUAL INST. OVERCURRENT PICKUP
32Q-NEGATIVE-SEQUENCE DIRECTIONAL
LOP-LOSS-OF-POTENTIAL
LOPE-LOSS OF POTENTIAL ENABLE
67NTC-67N TORQUE CONTROL ENABLE
RESIDUAL OVERCURRENT LOGIC DIAGRAM

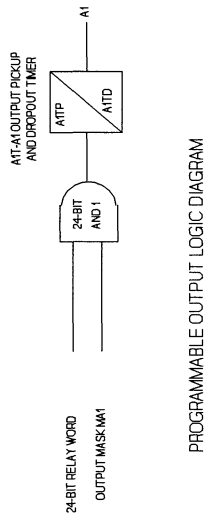

PROGRAMMABLE OUTPUT LOGIC DIAGRAM

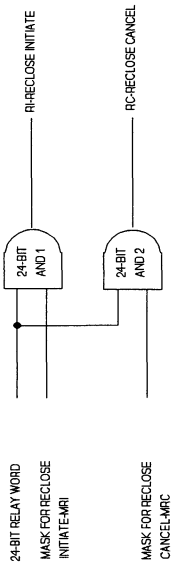

PROGRAMMABLE RECLOSE INITIATE AND CANCEL LOGIC DIAGRAM

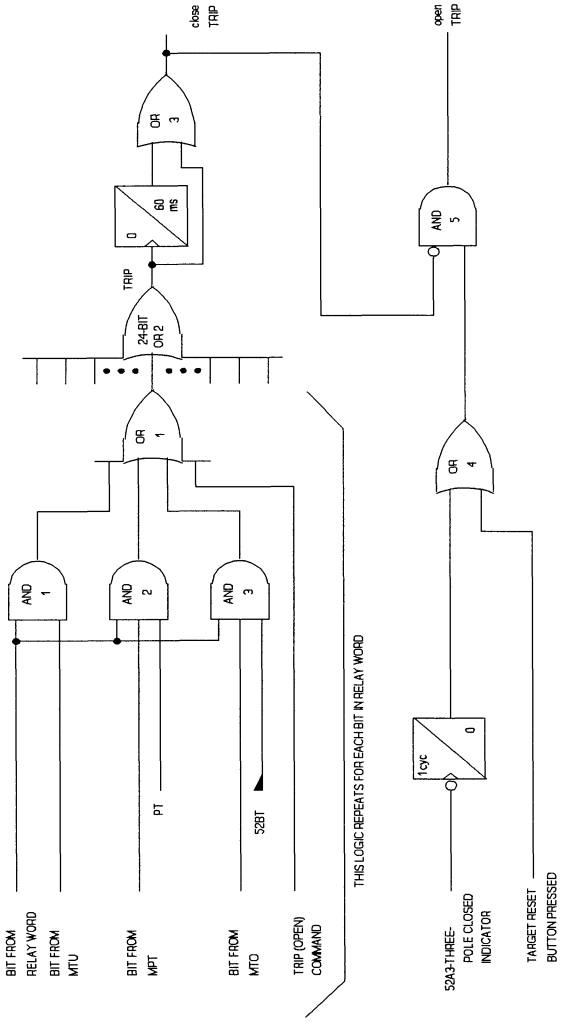

PROGRAMMABLE TRIP LOGIC DIAGRAM

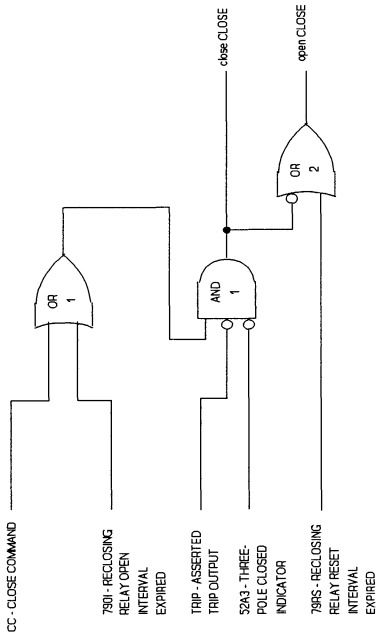

CLOSE LOGIC DIAGRAM

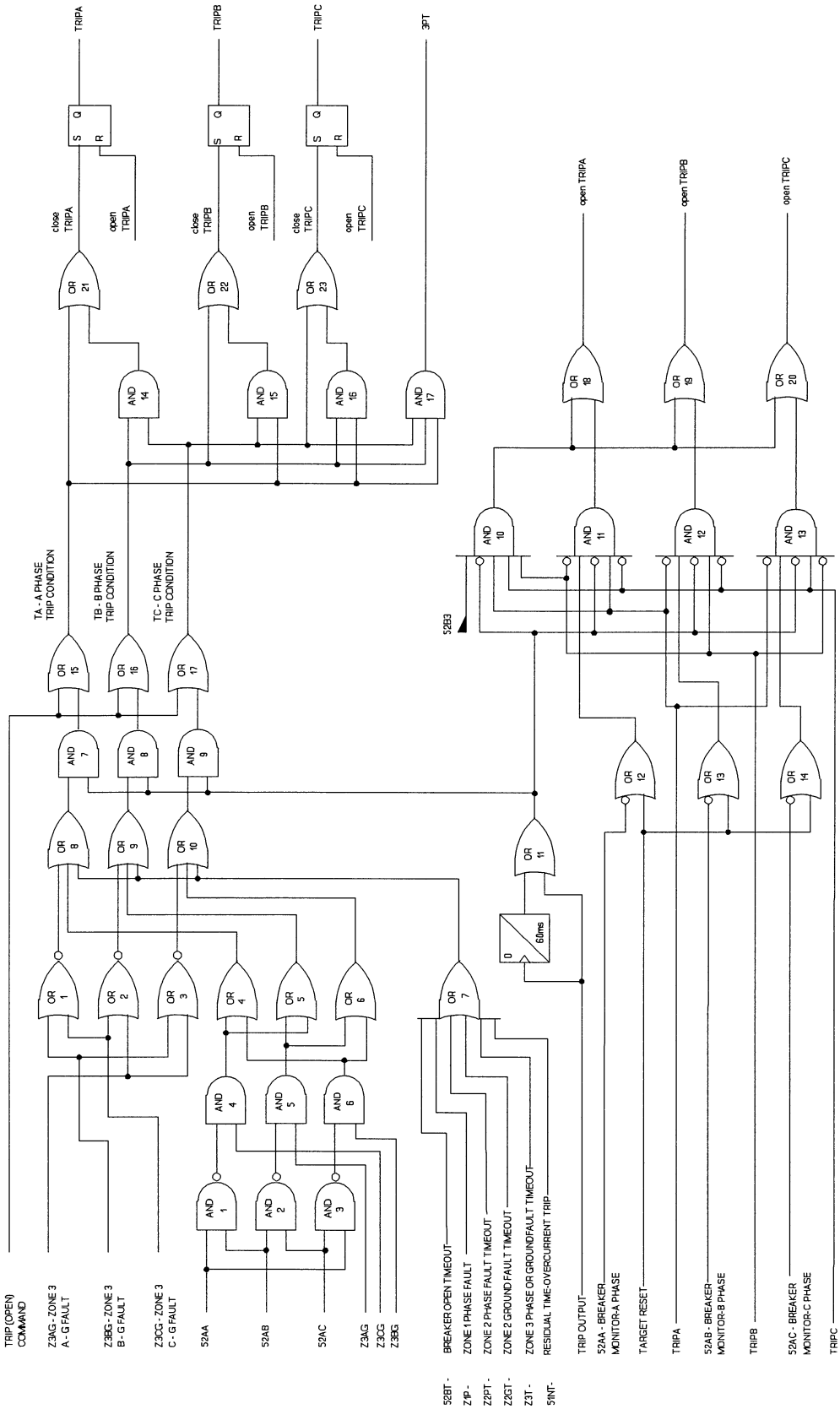

SINGLE-POLE TRIP OUTPUT LOGIC DIAGRAM

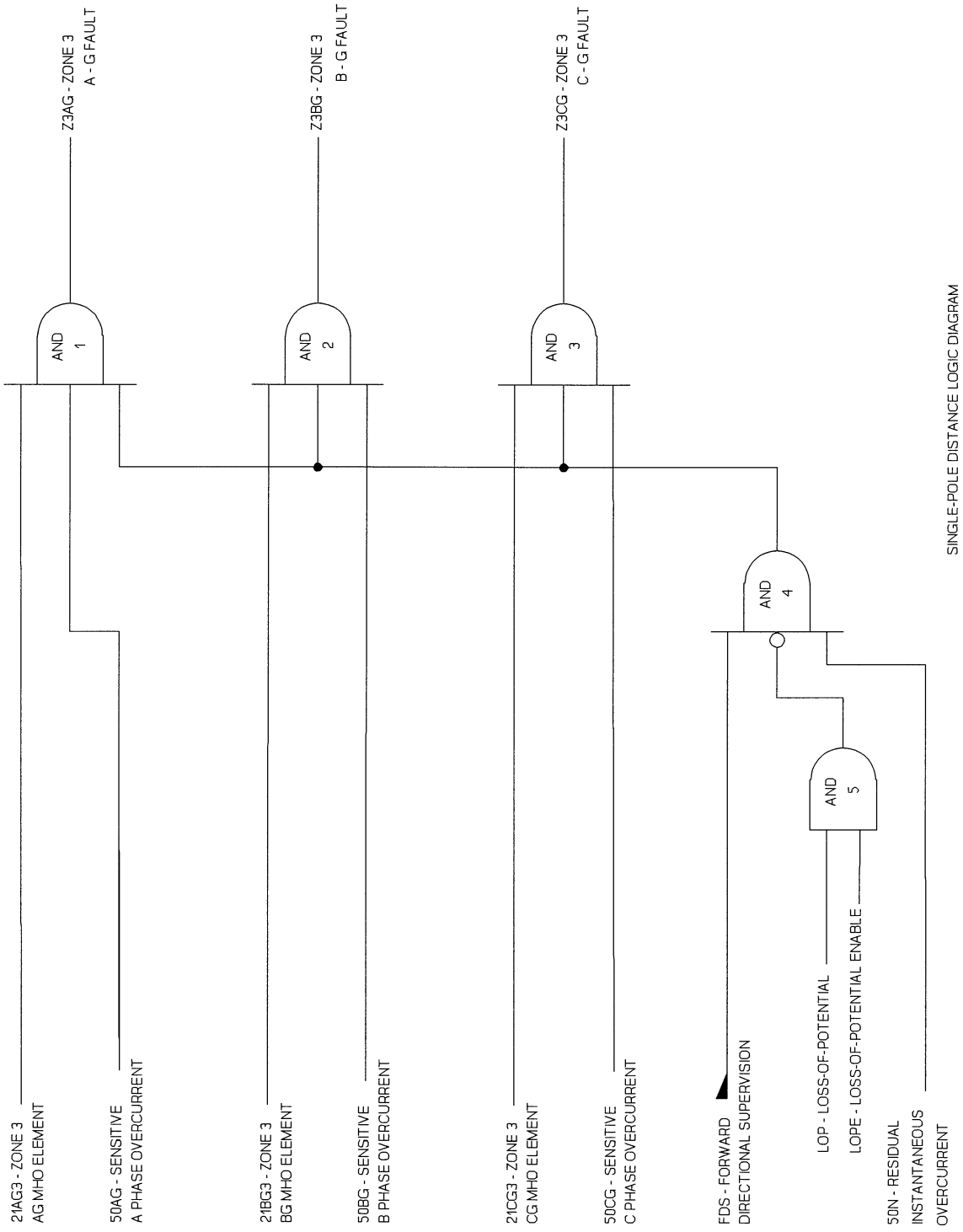

SINGLE-POLE DISTANCE LOGIC DIAGRAM

COMMANDS AND SERIAL COMMUNICATIONS
TABLE OF CONTENTS

Introduction 4-1
Serial Port Connections and Configurations 4-1
Communications Protocol 4-4
Command Characteristics 4-6
Command Descriptions 4-8
SEL-221S Relay/Fault Locator Command Summary 4-27

TABLES

Table 4.1: SEL-221S Relay Serial Port Connector Pin Assignments 4-3
Table 4.2: SEL-121S Relay Serial Port Connector Pin Assignments 4-4
Table 4.3: Hexadecimal/Binary Conversion 4-15
Table 4.4: Self Test Status Summary 4-17
Table 4.5: Target LED Assignment 4-18

FIGURES

Figure 4.1: SEL-221S Relay Nine-Pin Connector Pin Number Convention 4-2
Figure 4.2: SEL-121S Relay Nine-Pin Connector Pin Number Convention 4-2

COMMANDS AND SERIAL COMMUNICATIONS

INTRODUCTION

The relay is set and operated via serial communications interfaces connected to a computer terminal and/or modem or the SEL-PRTU. Communication serves these purposes:

1. The relay responds to commands spanning all functions, such as setting, metering, and control operations.

2. The relay generates an event record for TRIP output assertions, for an event triggering command, or for pickup of any relay element that triggers an event record.

3. The relay transmits messages in response to changes in system status, such as self test warnings.

It is impossible to disable any relaying or control functions via communications, unless a user enters erroneous or improper settings with the SET or LOGIC commands.

Note: In this manual, commands to type appear in bold/uppercase: **OTTER**. Keys to press appear in bold/uppercase/brackets: **<ENTER>**.

Relay output appears boxed and in the following format:

```
Example 230 kV Line                Date: 1/1/92     Time: 01:01:01
```

SERIAL PORT CONNECTIONS AND CONFIGURATIONS

The SEL-221S relay is equipped with two EIA RS-232-C serial communications ports. PORT 2 has nine-pin connectors on both the front and rear panels, designated PORT 2F and PORT 2R, respectively.

PORT 2R, located on the relay rear panel, is typically used with an SEL-DTA Display/ Transducer Adapter, SEL-RD Relay Display, or local printer. PORT 2F is always available for short term local communications with a portable computer or printing terminal. Simply plug the device into the front panel port. The relay automatically discontinues communications with PORT 2R and addresses PORT 2F. When testing or data retrieval is complete, unplug the temporary device from PORT 2F. The relay automatically resumes communication with the device connected to PORT 2R.

Serial communications PORT 1 and the Auxiliary Input for demodulated IRIG-B time code input are located on the relay rear panel.

Communications port baud rate jumpers are located along the front edge of the circuit board. To select a baud rate for PORT 1 or PORTs 2, remove the relay front panel. The jumpers are visible near the center of the relay drawout assembly, to the right of the target LEDs. Carefully move the jumpers using needle-nosed pliers. Available rates are 300, 600, 1200, 2400, 4800, and 9600 baud.

Caution: Do not select two baud rates for the same port as this can damage the relay baud rate generator. The relay is shipped with PORT 1 set to 300 baud and PORT 2 set to 2400 baud.

The serial data format is:

Eight data bits
Two stop bits
No parity bit

This format cannot be altered.

The SEL-121S relay does not include a front panel serial interface port.

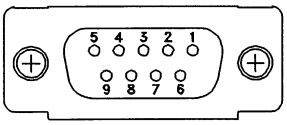

(female chassis connector, as viewed from outside panel)

Figure 4.1: SEL-221S Relay Nine-Pin Connector Pin Number Convention

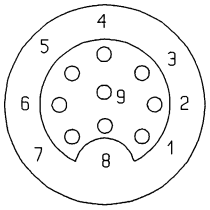

(female chassis connector, as viewed from outside rear panel)

Figure 4.2: SEL-121S Relay Nine-Pin Connector Pin Number Convention

Table 4.1 lists port pin assignments and signal definitions.

Table 4.1: SEL-221S Relay Serial Port Connector Pin Assignments

Pin	PORT 1, PORT 2R	PORT 2F	Description
1	+5 Vdc	N/C	
2	RXD	RXD	Receive data input.
3	TXD	TXD	Transmit data output.
4	+12 Vdc	N/C	
5	GND	GND	
6	-12 Vdc	N/C	
7	RTS	RTS	The relay asserts this line under normal conditions. When its received-data buffer is full, the line is deasserted, and asserts again when the buffer has sufficient room to receive more data. Connected devices should monitor RTS (usually with their CTS input) and stop transmission whenever the line deasserts. If transmission continues, data may be lost.
8	CTS	CTS	The relay monitors CTS, and transmits characters only if CTS is asserted.
9	GND	GND	Ground for ground wires and shields

Table 4.2 lists port pin assignments and signal definitions.

Table 4.2: SEL-121S Relay Serial Port Connector Pin Assignments

Pin	Name	Description
2	TXD	Transmit data output.
3	RTS	The relay asserts this line under normal conditions. When its received-data buffer is full, the line deasserts until the buffer has room to receive more data. Connected devices should monitor RTS (usually with their CTS input) and stop transmitting characters whenever the line deasserts. If transmission continues, data may be lost.
4	RXD	Receive data input.
5	CTS	The relay monitors CTS and transmits characters only when CTS is asserted.
6	+5 volts	
7	+12 volts	
8	-12 volts	
1,9	GND	Ground for ground wires and shields.

COMMUNICATIONS PROTOCOL

The communications protocol consists of hardware and software features. The hardware protocol consists of the control line functions described above. A software protocol designed for manual and automatic communications is provided, and described here.

1. All commands received by the relay must be of the form:

   <command><CR> or <command><CRLF>

   Thus a command transmitted to the relay should consist of the command name, followed by either a carriage return, or a carriage return and a line feed. To use any command, only the first three characters need be typed. Upper or lower cases are irrelevant.

2. All messages transmitted by the relay are of the following format:

   <STX> <MESSAGE LINE 1> <CRLF>
   <MESSAGE LINE 2> <CRLF>
   .
   .
   <LAST MESSAGE LINE> <CRLF> <PROMPT> <ETX>

   That is, each message begins with the start-of-transmission character (ASCII 02), and ends with the end-of-transmission character (ASCII 03), and each line of the message includes a carriage return and line feed at its end.

3. The relay indicates the volume of data in its received-data buffer by an XON/XOFF protocol.

   XON (ASCII hex 11) is transmitted by the relay when the buffer drops below ¼ full. The relay also asserts the RTS output.

   XOFF (ASCII hex 13) is transmitted when the buffer fills above 3/4 full. The relay deasserts the RTS output when the buffer is approximately 95% full. Automatic transmitting sources should monitor for the XOFF character and suspend transmission when the buffer fills. Transmission should terminate at the end of the message being transmitted when XOFF is received, and may be resumed when the XON character is received.

4. An XON/XOFF procedure may be used to control data transmission by the relay. When the relay receives XOFF while transmitting, it pauses until an XON character is received. If no message is being transmitted when XOFF is received, the relay blocks transmission of any message presented to its transmitting buffer. The message will be transmitted once XON is received.

   Reception of the CAN character (ASCII hex 18) at any time aborts a pending transmission. This is useful in terminating an unwanted transmission.

5. The control characters can be sent from most keyboards using the following keystrokes:

   XON: **<CTRL> Q** (hold down the Control key, and press Q)
   XOFF: **<CTRL> S** (hold down the Control key, and press S)
   CAN: **<CTRL> X** (hold down the Control key, and press X)

COMMAND CHARACTERISTICS

The relay responds to commands received by either of its serial communications interfaces. A two-level password system provides security against unauthorized access.

When the relay is first turned on, the instrument is in Access Level 0, and honors only the ACCESS command. It responds "Invalid command" or "Invalid access level" to any other entries.

Most commands are available from Access Level 1, which is entered using the ACCESS command and the first password. The password is factory-set to OTTER, and may be changed via the PASSWORD command (Access Level 2).

Critical functions, such as circuit breaker control and changing settings, may be completed only from Access Level 2 which is entered from Access Level 1 using the 2ACCESS command and the second password. The Level 2 password is factory-set to TAIL, and may be changed via the PASSWORD command.

Startup

When power is first applied, the instrument transmits the following message to the port(s) designated as the "automatic" port(s):

```
Example 230 kV Line                Date: 1/1/92     Time: 01:01:01

SEL-121S Relay
=
```

You should also hear the ALARM relay pull in, and then close again due to the loss-of-potential scheme, if no potentials are present on the voltage input terminal of the relay. The LOPA (loss-of-potential alarm enable) setting may be set so the ALARM contact does not close for a loss-of-potential condition.

The instruments are shipped with PORT 2 designated as the automatic port; however, a setting called AUTO exists for selecting PORT 1, 2, or both for the transmission of automatic responses from the relay (see the SET command).

To enter Level 1, type the following on a terminal connected to PORT 2:

```
=ACCESS <ENTER>

The response is:

Password: ? @@@@@@
```

Respond by entering the Level 1 password, e.g., OTTER, followed by a carriage return. The response is:

```
Example 230 kV Line                Date: 1/1/92     Time: 01:01:44

Level 1
=>
```

The equals sign and greater-than sign form the Access Level 1 prompt. Any Level 1 command can be executed from this prompt.

To enter Access Level 2, a similar procedure is used:

Enter the command **2ACCESS**, and listen for the ALARM relay to drop out and pull in. This action pulses the ALARM relay contact for about one second (if there is no other alarm condition), indicating that Level 2 Access is being attempted. Enter the proper password, e.g., TAIL, in response to the prompt for password. In response to the correct password, access to Level 2 is attained, as indicated by the following message and the Level 2 prompt:

```
Example 230 kV Line                Date: 1/1/92     Time: 01:01:44

Level 2
=>
```

Any Level 2 or Level 1 command can now be executed from this prompt.

Command Format

Commands consist of three or more characters; however only the first three characters of any command are required.

Upper or lower case characters may be used without distinction.

Note: Case is only important for passwords.

Arguments must be separated from the command by spaces, commas, semicolons, colons, or slashes.

Commands may be entered any time after an appropriate prompt is received.

COMMAND DESCRIPTIONS

Access Level 0 Command

ACCESS

Use ACCESS to gain access to the system from the Level 0 prompt (=). After typing **ACCESS <ENTER>**, a prompt for the Level 1 password appears. Type the password, and press **<ENTER>**. The factory set Level 1 password is "OTTER", but should ultimately be changed by the end-user using the PASSWORD command.

Successful access is indicated by the typical response shown below:

```
=ACCESS <ENTER>
Password: ? @@@@@@

Example 230 kV Line                Date: 1/1/92     Time: 01:02:05

Level 1
=>
```

The => prompt indicates you have reached Access Level 1.

If three unsuccessful access attempts are made in a row, the ALARM contact is pulsed for one second. This feature can be used to alert operations personnel that possible unauthorized access is being attempted, if the ALARM contact is connected to a monitoring system, such as SCADA.

Access Level 1 Commands

2ACCESS

Use 2ACCESS to gain access to Level 2 from Level 1. After typing **2ACCESS <ENTER>**, a prompt for the Level 2 password appears. Type the password in the same manner as for the ACCESS command, and press **<ENTER>**. The factory set Level 2 password is "TAIL", but should ultimately be changed by the end-user using the PASSWORD command.

Successful access is indicated by the typical response shown below:

```
=>2ACCESS <ENTER>
Password: ? @@@@@@

Example 230 kV Line                    Date: 1/1/92     Time: 01:02:13

Level 2
=>>
```

The = > > prompt signifies that Access Level 1 and 2 commands may now be used. The ALARM contact is pulsed for one second (if no alarm condition exists, such as self test failure) for any Level 2 access attempt, successful or otherwise.

Note: Password protection for the ACCESS and 2ACCESS commands can be disabled by installing JMP103 on the front of the main board.

DATE mm/dd/yy

To read the date kept by the internal calendar/clock, type **DATE <ENTER>**. To set the date, type **DATE** mm/dd/yy **<ENTER>**.

For example, to set the date to February 28, 1992, enter:

```
=>DATE 2/28/92 <ENTER>
2/28/92
=>
```

The relay responds by setting the date, pulsing the ALARM relay as the year is stored in EEPROM (only if the year input is different from the presently stored year), and displaying the set date.

EVENT n

You may view event records via an event report. To review the event report for the nth event, type **EVENT n <ENTER>**. The parameter n is 1 for the most recent event through 12 for the oldest event stored in the relay memory. If n is not specified, then it defaults to one.

For example, to inspect the newest report type **EVENT 1 <ENTER>**, or just **EVE <ENTER>**. The report provides the relay identifier string, and the date and time the event occurred. The next part of the report displays eleven cycles of data for four current channels (IR, IA, IB, and IC), three voltage channels (VA, VB, and VC), and the states of the internal relay elements, outputs and inputs during the event. Next, the report shows the type of event, and for faults, the location, duration, and current. At the end of the report the relay and logic settings are displayed.

Recall (from the COMMUNICATIONS PROTOCOL description) that you can terminate any transmission from the relay with the **<CTRL X>** (cancel) sequence, you can pause using **<CTRL S>**, and you can continue using **<CTRL Q>**. These are useful in reviewing or terminating an event report.

When the event buffers are cleared by a control power interruption, all the event data are lost. Asking for an event from an empty buffer (e.g., buffer 12 is empty) results in this message:

```
=>EVENT 12 <ENTER>
Invalid event
=>
```

A sample event report and explanation appear in the EVENT REPORTING Section.

HISTORY

The date, time, and type of event are shown for each of the twelve most recent events. If the event is a fault, the distance, duration, and current are also shown. An example of the display is shown below:

```
=>HISTORY <ENTER>

Example 230 kV Line                Date: 1/1/92      Time: 10:45:40

#    DATE        TIME        TYPE  DIST   DUR   CURR
1   2/28/92   09:03:01.092  3AG   100.2  7.25  798
2   2/28/92   09:02:13.041  3AG   74.9   7.00  1016
3   2/28/92   09:00:39.962  1AG   25.3   7.25  2162
4   2/28/92   09:00:13.345  1BC   25.5   7.25  3167
5
6
7
8
9
10
11
12
=>
```

Note that only four events have occurred since the relay was set or powered on.

The time is saved to the nearest quarter-cycle (4.17 ms), and is referenced to the 16th row of data in the report. All reports trigger at row 16. Thus the duration of a long fault which triggers a report when the fault occurs, and a second report when TRIP occurs, may be determined from the difference between the two report times.

The following TYPE indicators exist:

The TYPE column provides an abbreviated indication of the event type found in the event report. This is the same data presented as EVENT in the event summary automatically generated for each fault.

For faults, the indication includes zone and phase involvement information. The zone is determined from the relay elements picked up at the middle of the first contiguous sequence of picked-up relay elements in the report. For example, if relay elements are contiguously picked up from the 16th to the 24th rows, the zone is determined from the 20th row. The zone is indicated by the left-most character of the TYPE string, and is one of the following:

1 : For faults in which a Zone 1 element picked up
2 : For Zone 2, but not Zone 1
3 : For Zone 3, but not Zone 2 or 1
5 : For 51N pickup, but not Zone 3, 2, or 1
6 : For 67N pickup, but not Zone 3, 2, or 1
H : For 50H pickup, but not 67N, 51N or Zone 3, 2, or 1
? : For none of the above picked up at mid-fault

The phase involvement is shown by the characters subsequent to the zone indication, and is determined independently from relay elements. Phase involvement is determined solely from uncompensated and load compensated current magnitudes at the midpoint of the first contiguous relay pickup sequence in the event report. (See FAULT LOCATOR; Section 3: FUNCTIONAL DESCRIPTION for algorithmic details.) The phase involvement is indicated as one of:

AG : For A-phase to ground faults
BG : For B-phase to ground faults
CG : For C-phase to ground faults
AB : For A-B two-phase faults
BC : For B-C two-phase faults
CA : For C-A two-phase faults
ABG : For A-B two-phase to ground faults
BCG : For B-C two-phase to ground faults
CAG : For C-A two-phase to ground faults
ABC : For three-phase faults

The zone and phase involvement data are concatenated into a single string, completing the TYPE designation, as in "3BG", for a Zone 3 B-to-ground fault. For event reports triggered by the assertion of the TRIP output, the TYPE designation is further appended with a "T". This aids the determination of clearing times for faults which persist beyond the end of the first event report. For example, if the relay trips for a 3BG fault after completing the initial report, the second report shows "3BGT" for TYPE.

For events other than faults, the TYPE indication is either "TRIP" or "EXT". The TYPE shows "TRIP" when the relay generates an event report in response to the assertion of the TRIP output, say by execution of the OPEN command during no-fault conditions. For all other events, TYPE shows "EXT", indicating the report was generated in response to some external stimulus, such as the assertion of the ET (External Trigger), PT (Permissive Trip), or IN1 (Programmable Input 1) inputs, or by execution of the TRIGGER command.

The DIST column presents the equivalent distance to a fault in miles. This is calculated using either the Takagi algorithm or a reactance measurement, depending on whether prefault data are available in the event report. For some boundary faults of long duration, the fault locator may not be able to locate the fault for every report generated. The DIST column may contain "999999" in such cases. (While this behavior can be contrived under test conditions, it is extremely rare in actual practice.)

The column headed DUR gives a measure of the fault duration. This is measured from the first pickup of a Zone 1, 2, or 3, 67N, 51N, or 50H relay element until the first dropout of all said relay elements. In other words, it is the duration of the first contiguous pickup of relay elements found in the long event report, converted to units of cycles.

The CURR column shows the magnitude of the maximum phase-current measured at the middle of the fault in primary amperes.

IRIG

Executing the IRIG command causes the relay to read the demodulated IRIG-B time code input at J201 on the rear panel, if present.

If the time code is successfully read, then the interval clock/calendar time and date are updated to the time code reading, and a message consisting of the relay ID string and the date and time is output. An example of a successful read is shown below.

```
=>IRIG <ENTER>
Example 230 kV Line                Date: 1/1/92     Time: 15:05:22

=>
```

If no time code signal is present at the AUX port or if the time code cannot be successfully decoded, the relay sends the error message "IRIGB DATA ERROR." An unsuccessful read causes the following output:

```
=>IRIG <ENTER>
IRIGB DATA ERROR

=>
```

Note: When the relay is connected to a time code signal via the AUX port it is normally unnecessary to synchronize using this command; the relay synchronizes automatically every few minutes. The command is provided as a test and setup feature, to avoid waiting for automatic synchronization during test and installation.

METER n

The voltages, currents, and real and reactive power are displayed in primary quantities of amperes, kilovolts, megawatts and megavars. An example appears on the following page.

```
=>METER <ENTER>

Example 230 kV Line                    Date: 1/1/92      Time: 01:05:25

                A       B       C      AB      BC      CA
I (A)         994     995     994    1723    1724    1724
V (kV)      134.4   134.3   134.2   233.1   232.8   232.9

P (MW)     401.12
Q (MVAR)     1.00

=>
```

P and Q are positive when the power flow is in the direction of the reach of the relay, i.e., out from the bus and into the line.

The optional command parameter n selects the number of times the meter data are displayed. For example, to see a series of eight meter readings, type METER 8.

QUIT

Executing the QUIT command returns control to Access Level 0 from either Access Level 1 or 2, and resets the targets to the Relay Targets (TAR 0). The terminal displays the relay I.D., date, and time when QUIT is executed. Use this command when you finish communicating with the relay, so that unauthorized access is avoided. (Note that control returns to Access Level 0 automatically after a settable interval of no activity. See the TIME1 and TIME2 settings of the SET command.) See the following QUIT command example.

```
=>QUIT <ENTER>

Example 230 kV Line                    Date: 1/1/92      Time: 01:50:03

=
```

SHOWSET

Enter SHOWSET to inspect the relay settings. The display shows the relay settings and logic settings presently set. The settings cannot be modified with this command. The settings are entered using the SET and LOGIC commands under Access Level 2.

An example of the output from executing SHOWSET appears on the following page.

```
=>SHOWSET <ENTER>

Settings for: Example 230 kV Line

R1   =13.90    X1   =79.96    R0   =41.50    X0   =248.5  LL=100.00
CTR  =200.00   PTR  =2000.00  MTA  =80.80
79OI =40.00    79RS =240.00   A1TP =0.00     A1TD =0.00
Z1%  =80.00    Z2%  =120.00   Z3%  =150.00
Z2DP =30.00    Z2DG =20.00    Z3D  =40.00
50NG =100.00   50P  =200.00   50H  =3000.00
51NP =100.00   51NTD=3.00     51NC =2        51NTC=Y
67NP =1200.00  67ND =10.00    67NTC=Y
52BT =30.00    POD  =60.00    LOPE =Y        LOPA =Y
TIME1=5        TIME2=0        AUTO =2        RINGS=3

Logic settings:

MTU  MPT  MTO  MA1  MRI  MRC
F3   FF   FF   FF   C0   33
50   50   50   50   00   50
00   00   00   00   00   08

=>
```

A brief line-by-line description of the settings follows:

Line 1: Positive- and zero-sequence impedances of the transmission line (primary ohms), and the line length (miles) for which the impedances are given.

Line 2: Current and voltage transformer ratios, and maximum torque angle.

Line 3: Reclosing open interval delay and reset delay, and output contact A1 pickup and dropout delays.

Line 4: Zone 1, 2, and 3 reach as a percent of the positive-sequence line impedance.

Line 5: Zone 2 delays for phase and ground faults, and Zone 3 delay for both phase and ground faults.

Line 6: Sensitive residual or phase overcurrent element, phase overcurrent element and high-set phase overcurrent element pickup thresholds.

Line 7: Residual time-overcurrent pickup, time dial, curve and torque control enable.

Line 8: Residual overcurrent pickup, time delay, and torque control enable.

Line 9: 52B time delay, pole open time delay, loss-of-potential enable, and loss-of-potential alarm enable.

Line 10: PORT 1 and 2 timeouts, the autoport for automatically transmitted messages, and the number of rings after which the modem will automatically answer.

The description of the LOGIC command gives a detailed explanation of the logic settings. Each column in the logic settings display shows the masks for the three sections of the Relay Words as follows:

Row 1, of any column:	Z1P	Z1G	Z2PT	Z2GT	Z3P	Z3G	Z3T	50H
Row 2, of any column:	67NP	67NT	51NP	51NT	50NG	50P	50G	32Q
Row 3, of any column:	FDS	3P21	LOP	52BT	IN1	PO	3PT	*

The logic settings are shown in hexadecimal format. The following table shows the equivalencies between hexadecimal (hex) and binary numbers to assist your examination of the logic settings display.

Table 4.3: Hexadecimal/Binary Conversion

Hexadecimal	Binary	Hexadecimal	Binary
0	0000	8	1000
1	0001	9	1001
2	0010	A	1010
3	0011	B	1011
4	0100	C	1100
5	0101	D	1101
6	0110	E	1110
7	0111	F	1111

For example, consider row 2 of mask MA1, which is set to 50 hex format. Using the table to convert 50 to binary gives:

50 -> 0101 0000

Now, build the Relay Word for row 2 of mask MA1 as follows:

```
67NP   67NT   51NP   51NT   50NG  50P   50G   32Q
 0      1      0      1      0     0     0     0
_______   5  _______      _______  0  _____
```

STATUS

Inspect the relay self test status using the STATUS command. The instrument also automatically executes the STATUS command whenever a self test enters a warning or a failure state, causing the STATUS report to be transmitted out of the port(s) selected for automatic transmissions. (See AUTO setting of the SET procedure.) The format of the STATUS report is shown below:

```
=>STATUS <ENTER>

Example 230 kV Line                Date: 1/1/92     Time: 01:06:19

SELF-TESTS

W=Warn F=Fail
      IR   IA   IB   IC   VA   VB   VC
OS    0    0    0    0    0    0    0
PS     5.01      15.14    -14.91
RAM    ROM    A/D    MOF    SET
OK     OK     OK     OK     OK

=>
```

The OS row indicates measured offset voltages of the eight analog channels. They are expressed in millivolts at the point in the system immediately ahead of the programmable-gain amplifier. Warning and failure thresholds are 50 and 75 millivolt deviations from zero, respectively.

An out-of-tolerance offset is indicated by W (warning) or F (failure) following the displayed gain or offset value.

The PS row indicates voltages of the three power supplies. Suffixes of W or F are added to indicate warning or failure states of the power supply voltage tests. Warning and failure levels are deviations by 0.3 and 0.4 volts for the five-volt supply, and 0.8 and 1.2 volts for the 15-volt supplies.

The status of five tests is reported in the last two rows. If a RAM or ROM test fails, the IC socket number of the defective part is indicated in place of OK.

The A/D self test checks the A/D conversion time. If it exceeds a threshold, the test fails, and the protection functions are disabled. The MOF test checks the offset in the MUX-PGA-A/D circuit when a grounded input is selected. It has warning and failure thresholds the same as the offset tests. SET indicates the state of the self test which compares two copies of the settings stored in nonvolatile memory. Failure of this test disables relay and control functions.

The following table shows the actions which the relay takes in response to any self-test warning or failure condition, where F=Failure, W=Warning:

Table 4.4: Self Test Status Summary

SELF TEST	STATUS MESSAGE	PROTECTION DISABLED	CONTROL DISABLED	ALARM OUTPUT
CHANNEL	W	no	no	no
OFFSET	F	no	no	1 second contact pulse
+5V	W	no	no	no
	F	YES	YES	permanent contact closure
±15V	W	no	no	no
	F	YES	no	permanent contact closure
RAM	F	YES	YES	permanent contact closure
ROM	F	YES	YES	permanent contact closure
A/D	F	YES	no	permanent contact closure
MASTER	W	no	no	no
OFFSET	F	no	no	1 second contact pulse
SETTINGS	F	YES	YES	permanent contact closure

TARGETS n k

This command selects the information to be displayed on the front-panel target LEDs, and also communicates the state of the selected LEDs.

When the relay power is turned on, the LED display indicates the functions marked on the front panel. That is, the LEDs default to displaying fault information shown in the row labelled RELAY TARGETS in the table shown below.

Using the TARGET command, you may select any one of seven sets of data listed below to be printed and displayed on the LEDs.

Table 4.5: Target LED Assignment

LED: n	1	2	3	4	5	6	7	8	
O	EN	A	B	C	G	Z1	Z2	Z3	Relay Targets
1	Z1P	Z1G	Z2PT	Z2GT	Z3P	Z3G	Z3T	50H	Relay Word Row #1
2	67NP	67NT	51NP	51NT	50NG	50P	50G	32Q	Relay Word Row #2
3	FDS	3P21	LOP	52BT	IN1	PO	3PT	*	Relay Word Row #3
4	50N	Z3CG	Z3BG	Z3AG	RC	RI	52A3	52B3	Internal Elements
5	*	*	ET	52AC	52AB	52AA	PT	IN1	Contact Inputs
6	*	TRIP	CLOS	A1	TRPA	TRPB	TRPC	ALRM	Contact Inputs

These selections are useful in testing relay elements, in checking contact states, and in remotely reading the targets. A "1" indicates an asserted element; a "0" indicates an deasserted element.

The optional command parameter k selects the number of times the target data are repeatedly displayed for a certain choice of parameter n. For example, to see a series of ten target readings of target number four, execute the following:

```
=>TARGET 4 10 <ENTER>

 50N  Z3CG Z3BG Z3AG RC   RI   52A3  52B3
 0    1    0    0    0    0    0     0
 0    1    0    0    0    0    0     0
 0    1    0    0    0    0    0     0
 0    1    0    0    0    0    0     0
 0    1    0    0    0    0    0     0
 0    1    0    0    0    0    0     0
 0    1    0    0    0    0    0     0
 0    1    0    0    0    0    0     0

 50N  Z3CG Z3BG Z3AG RC   RI   52A3  52B3
 0    1    0    0    0    0    0     0
 0    1    0    0    0    0    0     0

=>
```

Be sure to return the function of the targets to display the fault targets, so that field personnel do not misinterpret the displayed data. Do this by typing TAR 0.

Pressing the TARGET RESET button on the front panel clears the TAR 0 data, and lights all target LED's for about one second as a lamp test. Furthermore, pressing the TARGET RESET button unlatches the TRIP output from the 52A inputs. This feature is useful during relay testing, and minimizes the risk of re-installing the relay with the TRIP output asserted.

The front panel targets can be reset to TAR 0 and cleared remotely or locally using the TARGET command. Type **TARGET R <ENTER>** to reset and clear the targets as shown below.

```
=>TARGET R <ENTER>
Targets reset

 EN   A    B    C    G    Z1   Z2   Z3
 1    0    0    0    0    0    0    0

=>
```

TIME hh:mm:ss

To read the internal clock, type **TIME <ENTER>**. To set the clock, enter TIME followed by the desired setting. Separate the hours, minutes and seconds with colons, semicolons, spaces, commas or slashes. For example, to set the clock to 23:30:00, enter:

```
=>TIME 23:30:00 <ENTER>
23:30:00
=>
```

A quartz crystal oscillator provides the time base for the internal clock, and the SEL-221S relay time code input can be used to synchronize this clock to an external clock with a demodulated IRIG-B time code output.

TRIGGER

Type **TRIGGER <ENTER>** to generate an event record. The relay transmits a response of "Triggered". The computer formats the just-triggered record and displays a summary of the record after a short delay.

The TRIGGER command is useful in inspecting phasor voltages and currents. For example, when the relay is first installed, execute the TRIGGER command, draw the phasors (the EVENT REPORTING Section explains how to do this), and check for the proper polarity and phase-sequence of the inputs.

Event records may also be generated without control action by asserting the EXTERNAL TRIGGER input.

Access Level 2 Commands

All commands are available from Access Level 2, however, the commands listed below are available ONLY from Access Level 2. Recall that any attempt, successful or otherwise, to enter Access Level 2 causes the ALARM relay to pulse for one second.

CLOSE

The CLOSE output relay can be closed by execution of the CLOSE command or by asserting the DIRECT CLOSE input, as long as the 52A inputs are not asserted. The CLOSE output relay remains closed until the 52A inputs are all asserted, (indicating that the circuit breaker is closed), or until the reclose reset internal time (79RS) expires.

To close the circuit breaker using this command, type **CLOSE <ENTER>**. The prompting message "Close BREAKER (Y/N) ?" is displayed. Answering **Y <ENTER>** yields a second prompting string: "Are you sure (Y/N) ?". Typing **Y <ENTER>** closes the CLOSE output relay, as long as 52A3 is not asserted. The message "Breaker CLOSED" is transmitted once the breaker closes, or if it is already closed (as determined by the state of the 52A inputs). Typing **N <ENTER>** to either of the above prompts aborts the closing operation, with transmission of the message "Aborted". The following example shows the output for the CLOSE command.

```
=>>CLOSE <ENTER>
Close BREAKER (Y/N)? Y <ENTER>
Are you sure (Y/N)? Y <ENTER>
Breaker CLOSED
=>>
```

The CLOSE command aborts unless the remote open/close jumper (JMP1O4) is in place on the main board.

LOGIC n

The logic command programs a series of masks used for controlling the outputs and reclosing operations.

The parameter n specifies which mask to program. The n can be any of the following:

MTU	-	Mask for unconditional trip
MPT	-	Mask for trip with permissive-trip asserted
MTO	-	Mask for trip with breaker open
MA1	-	Mask for A1 relay control
MRI	-	Mask for reclose initiate
MRC	-	Mask for reclose cancel

The logic programming procedure consists of typing in changes for the mask, or by typing **<ENTER>**, indicating no change. Each of the masks, listed above, is split into sections corresponding to the three rows of the Relay Word as follows:

Row 1 of the Relay Word:	Z1P	Z1G	Z2PT	Z2GT	Z3P	Z3G	Z3T	50H
Row 2 of the Relay Word:	67NP	67NT	51NP	51NT	50NG	50P	50G	32Q
Row 3 of the Relay Word:	FDS	3P21	LOP	52BT	IN1	PO	3PT	*

The LOGIC command, when executed, displays a header for eight elements of the Relay Word (as shown above), and the present logic mask for those elements of the Relay Word. The relay displays a question mark prompt, and waits for input. Enter only ones and zeros as input, where one selects and zero deselects a member of the Relay Word. Press the carriage return if the group is satisfactory. If you wish to change any member of a group, all eight members must be input at the same time, even if no change is desired for some members. If an error occurs during input of new data, the existing settings and question mark prompt are redisplayed, so a correction can be entered.

Once all data are provided for a mask, the new logic settings are displayed, and a prompt is issued requesting your approval to enable the relay with the new logic settings. Answering "Y" enters the new data, pulses the ALARM contact momentarily, and clears the event buffers. Answering "N" retains the old settings.

An example of the output showing the setting of the MTU logic mask is shown below.

```
=>>LOGIC MTU <ENTER>

1 selects, 0 deselects.

Z1P  Z1G  Z2PT Z2GT Z3P  Z3G  Z3T  50H
 0    0    0    0    0    0    0    0
 ? 11110010 <ENTER>
 1    1    1    1    0    0    1    0
 ? <ENTER>
67NP 67NT 51NP 51NT 50NG 50P  50G  32Q
 0    0    0    0    0    0    0    0
 ? 01010000 <ENTER>
 0    1    0    1    0    0    0    0
 ? <ENTER>
FDS  3P21 LOP  52BT IN1  PO   3PT   *
 0    0    0    0    0    0    0    0
 ? <ENTER>

New MTU :

Z1P  Z1G  Z2PT Z2GT Z3P  Z3G  Z3T  50H
 1    1    1    1    0    0    1    0
67NP 67NT 51NP 51NT 50NG 50P  50G  32Q
 0    1    0    0    0    0    0    0
FDS  3P21 LOP  52BT IN1  PO   3PT   *
 0    0    0    0    0    0    0    0

OK (Y/N) ? Y <ENTER>
Enabled

Example 230 kV Line                Date: 1/1/92     Time: 02:12:28

=>>
```

The masks must be properly configured for your application.

OPEN

The TRIP, TRIPA, TRIPB, and TRIPC output relays assert in response to the OPEN command. The TRIP relay remains closed until all three 52A inputs (52AA, 52AB, 52AC) are not asserted, indicating that the breaker poles are opened. The single-pole trip output relays, TRIPA, TRIPB, and TRIPC follow the TRIP output, remaining asserted until 52AA, 52AB, and 52AC deassert. All trip output relays seal in. In all cases the trip output relays remain asserted for a minimum of 60 ms.

When the breaker is open as indicated by the 52A3 logic, the trip output relays are asserted for about ½ second.

To open the power circuit breaker by command, type **OPEN <ENTER>**. A prompt "Open BREAKER (Y/N) ?" is transmitted. Answering **Y <ENTER>** yields a second prompt: "Are you Sure (Y/N) ?". Answering **Y <ENTER>** causes the TRIP output relays to close as described above and triggers an event. Answering **N <ENTER>** to either prompt aborts the OPEN command with the message "Aborted". An example for this command is as follows:

```
=>>OPEN <ENTER>
Open BREAKER (Y/N) ? Y <ENTER>
Are you sure (Y/N) ? Y <ENTER>
Breaker OPEN
=>>

Example 230 kV Line                Date: 1/1/92    Time: 02:44:09.370

Event    : TRIP   Location    :       mi        ohms sec
Duration:         Flt Current:
=>>
```

The OPEN command aborts unless the remote open/close jumper (JMP104) is in place on the main board.

PASSWORD (1 or 2) password

To inspect the passwords, type **PASSWORD <ENTER>** as shown below.

```
=>>PASSWORD <ENTER>
1: OTTER
2: TAIL
=>>
```

To change the password for Access Level 1 to BIKE enter the following:

```
=>>PASSWORD 1 BIKE <ENTER>
Set
=>>
```

The relay responds by setting the password, pulsing the ALARM relay, and transmitting the response "Set".

After entering new passwords, execute "PASS" to inspect the new passwords. Make sure they are what you intended. Be sure to write down the passwords after you change them.

Passwords consist of up to six numbers, letters, or any other printable character, except the delimiters (space, comma, semicolon, colon, slash). Upper and lower case letters are treated as different letters. Examples of valid, distinct passwords include:

OTTER otter Ot3456 +TAIL+ !@#$%^ 221S 123456 12345. 12345 ab1CDE

If the passwords are lost, or you wish to operate the relay without password protection, install JMP103 on the main board (NO password protection). With no password protection, you may gain access without knowing the passwords and execute the PASSWORD command to discover or change the "forgotten" passwords.

SET n

SET allows entry of relay settings. At the setting procedure prompts, enter new data or press **<ENTER>** to indicate no change. You can jump to a specific setting by entering the setting name as parameter n. If no setting is entered as an argument, the procedure initiates at the first setting, Relay ID.

The SET command prompts you for each setting. The relay checks new settings against established limits twice. If the setting is within primary setting range, the relay prompts you for the next setting. Press **<ENTER>** to retain an existing setting.

The first check is a primary setting limit check, the second is a secondary setting limit check. The primary check is intended as a rough guideline for individual settings and ensures that settings fall within a reasonable range. The secondary check compares the entire group of settings against the individual secondary setting limits shown in Section 3: FUNCTIONAL DESCRIPTION.

When you finish entering setting changes, it is not necessary to scroll through the remaining settings. Type **END <ENTER>** after your last change to display the new settings and enable prompt. Do not use the END statement at the Relay ID setting; use **<CTRL>X** to abort the SET procedure from this point.

After you enter all data, the relay displays the new settings and prompts for approval to enable them. Answer **Y <ENTER>** to approve the new settings. Error messages notify you when entry combinations result in an out-of-range secondary setting. If all settings are acceptable, the relay enables them, closes the ALARM contact momentarily, and clears the event buffer.

A list of relay settings and the primary limit checks follow. Please note that each setting must also be within the secondary setting limit of the relay.

R1, X1	Pos. seq. primary impedance of line (0-9999 ohms)
R0, X0	Zero seq. primary impedance of line (0-9999 ohms)
LL	Line length (0.1-999 miles)

CTR CT ratio (e.g., for 600:5, enter 120) (1-5000)
PTR PT ratio (e.g., 1200:1, enter 1200) (1-10,000)
MTA Maximum torque angle for mho elements (47°- 90°)

79OI Reclosing relay open interval (0 to 8,000 cycles in quarter-cycle steps; 0 disables reclosing)
79RS Reclosing relay reset time (60 to 8,000 cycles in quarter-cycle steps)
A1TP A1 contact output pickup delay (0-8000 cycles in quarter-cycle steps)
A1TD A1 contact output dropout delay (0-8000 cycles in quarter-cycle steps)

Z1% Zone 1 reach (percent of positive-sequence line impedance: 0 to 2000%)
Z2% Zone 2 reach (percent of positive-sequence line impedance: 0 to 3200%)
Z3% Zone 3 reach (percent of positive-sequence line impedance: 0 to 3200%)

Z2DP Zone 2 delay for phase-to-phase faults (3-2000 cycles in quarter-cycle steps)
Z2DG Zone 2 delay for ground faults (3-2000 cycles in quarter-cycle steps)
Z3D Zone 3 delay for phase-phase and phase-ground faults (3-2000 cycles in quarter-cycle steps)

50NG Sensitive residual or phase overcurrent element pickup (0.25-50,000 primary amperes)
50P Phase overcurrent element pickup (0.25-50,000 primary amperes)
50H Phase overcurrent element high pickup (0.25-50,000 primary amperes)

51NP Residual time-overcurrent pickup (0.25-50,000 primary amperes)
51NTD Residual time-overcurrent time dial (0.5-15)
51NC Residual time-overcurrent curve index. Choices are as follows:
Use 1 to select a moderately inverse curve
Use 2 to select an inverse curve
Use 3 to select a very inverse curve
Use 4 to select an extremely inverse curve
51NTC Do you want residual time-overcurrent torque control? (Y or N)

67NP Residual ground overcurrent pickup (0.25 - 50,000 primary amperes)
67ND Residual ground overcurrent delay (0 - 8000 cycles in quarter-cycle steps)
67NTC Should the residual overcurrent element be torque controlled? (Y or N)

52BT 52B time delay (0.5 to 10,000 cycles in quarter-cycle steps)
POD Pole open delayed dropout setting (0 - 8000 cycles in quarter-cycle steps)
LOPE Should tripping be blocked when loss-of-potential is detected? (Y or N)
LOPA Should loss-of-potential be alarmed via the ALARM output contact? (Y or N)

TIME1 Timeout for PORT 1 (0-30 minutes)
TIME2 Timeout for PORT 2 (0-30 minutes)
AUTO Autoport (PORT 1, 2, or 3)
RINGS The number of rings after which the modem answers (1-30 rings)

Refer to the Functional Description and be sure the settings you choose result in relay performance appropriate to your application.

EVENT REPORTING
TABLE OF CONTENTS

Introduction 5-1
Example Event Report 5-2
Interpretation of Voltage and Current Data 5-3
Relay Element Status Indicators 5-4
Firmware Identification 5-7
Sample Event Report 5-8

EVENT REPORTING

INTRODUCTION

The SEL-221S relay transmits a summary event report in response to several events, and saves a full event report in its memory. The summary report includes the identifier message entered at the beginning of the setting procedure as well as the date, time, and type of event. If it is a fault, then the distance to fault and the impedance to the fault (along the line) in secondary ohms, the fault duration, and a fault current measurement are also displayed.

The summary report is automatically transmitted out the designated AUTOMATIC port (refer to AUTO setting), regardless of access level, as long as the designated port(s) is(are) not timed out. If the automatic transmissions are to be monitored by a dedicated channel or to be printed on a dedicated printer, be sure to enter a setting of zero for the port timeout interval of the appropriate port (refer to TIME1, TIME2 settings).

The full report contains current and voltage information from which phasor diagrams of the prefault, fault, and postfault conditions may be constructed. It also contains many status points, spanning the states of all relay elements, contact inputs and contact outputs. These are useful in reviewing fault duration, relay element responses, time of arrival of transfer-trip signalling with respect to local relay response, etc.

The full report is not automatically transmitted, due to its length (about one page). Its transmission is requested by using the EVENT command, e.g., EVENT 1.

The twelve most recent events are stored in the relay volatile memory. These data are retained as long as the control power remains on or until new settings are entered using the SET or LOGIC commands. This differs from the relay settings, which are retained in nonvolatile memory. The settings are retained until changed by the SET command, regardless of control power cycling. You may quickly review the stored events using the HISTORY command.

Event reporting is triggered by any of the following:

Fault in any zone	Assertion of PERMISSIVE TRIP Input
51N Pickup	Execution of TRIGGER command
50H Pickup	Execution of OPEN command, if a trip results
67N Pickup	Assertion of IN1 Input
TRIGGER command	Assertion of External Trigger input

Another event report is triggered for the same fault if the trip occurs after the end of the first report.

Event reporting is NOT triggered by either of the following:

Changes to the 52A inputs	Execution of the CLOSE command

See the FAULT LOCATOR subsection in Section 2: FUNCTIONAL DESCRIPTION section for more explicit information on event report triggering.

EXAMPLE EVENT REPORT

A full event report is provided at the end of this section on page 5-8. The report was generated in response to a simulated fault on the Example 230 kV Line described in Section 2: INITIAL CHECKOUT section of this manual. An A-ground fault 75 miles away was applied to the loaded line. A source impedance of 0.2 of the total line impedance was used. A BASIC program in Section 7: MAINTENANCE AND TESTING can be used to calculate the test set settings for the fault without any load flow. A latching relay was used to simulate the circuit breaker action and to provide contacts whose states are sensed by the relay 52A inputs.

The actual pre-fault load settings for the test set are given below.

VA	VB	VC	IA	IB	IC	
66.88	66.88	66.88	1.03	1.03	1.03	volts or amps
-1.4	-121.4	118.6	4.9	-115.1	124.9	degrees

The test set settings for the actual fault are as follows:

VA	VB	VC	IA	IB	IC	
52.90	69.52	70.36	5.16	1.03	1.03	volts or amps
-4	-125.8	122.4	-75.7	-115.1	124.9	degrees

In primary units of kilovolts and amperes, the voltages and currents for the fault are:

VA	VB	VC	IA	IB	IC	
105.8	139.0	140.7	1032	206	206	kilovolts or amperes

These were obtained using the potential and current transformer ratios assumed in the Example 230 kV Line. Note that these ratios are displayed at the end of the report:

PTR = 2000 CTR = 200.

The following paragraphs describe the response of the relay to this simulated fault using information taken from the full event report.

INTERPRETATION OF VOLTAGE AND CURRENT DATA

The voltage and current data provided in the event report are determined from the secondary quantities presented to the rear panel of the relay, by the processing steps outlined below.

1. The input analog signals are filtered by two-pole low-pass filters with cutoff frequencies of about 85 Hz.

2. The filtered analog signals are sampled four times per power system cycle, and converted into numerical values.

3. The sampled data are processed by digital filters which remove dc and ramp components. The unit sample response of these filters is:

   1, -1, -1, 1

   This filter has the property of a double differentiator-smoother.

4. The digital filter output data are scaled into primary quantities using the current and potential transformer ratios entered in the setting procedure. Since the samples are taken four times per power-system cycle and the four most recent samples are processed through the digital filter every quarter-cycle, successive outputs of the filter arrive every 90°. That is, with respect to the present value of the filter output, the previous value was taken one quarter-cycle earlier and appears to be leading the present value by 90°.

These filter output values can be used to represent the signals as phasors:

The PRESENT value of the output is the X-component of the phasor.
The PREVIOUS value of the output is the Y-component of the phasor.

It may seem confusing to refer to the older data as the leading component of the phasor. The following example may help. Consider a sinewave with zero-phase shift with respect to t=0 and a peak amplitude of 1. Now consider two samples, one taken at t=0, and the other taken 90° later. They have values 0 and 1, respectively. By the above rules, the phasor components are (X,Y) = (1,0). Now consider a cosine function. Its samples taken at the same time instants are 1 and 0, and its phasor representation is (0,1). The phasor (0,1) leads the phasor (1,0) by 90°, and this agrees with the 90° lead that the cosine function has with respect to the sine function.

To construct a phasor diagram of voltages and currents, select a pair of adjacent rows in the event report in the region of interest (prefault, fault or postfault). On Cartesian coordinates, plot the lower row (more-recent data) as the X-components, and the upper row (older data) as the Y-components. The complete phasor diagram may be rotated to any preferred angle of reference. The effective value of any phasor equals the square root of the sum of the squares of its components.

Note that moving forward one quarter-cycle causes the phasors all to rotate 90°, as can be seen by plotting the phasor diagram using, say rows 1 and 2, then rows 2 and 3.

As an example, refer to the second and third rows of cycle 6 of data in the full report:

CURRENTS				VOLTAGES			
IR	IA	IB	IC	VA	VB	VC	
481	302	170	16	-86.5	127.8	3.0	row Y
-907	-994	-113	211	-61.3	-54.7	140.4	row X

These were taken near the "middle" of the fault, as can be judged from the action of ground mho elements.

Convert these to polar form (magnitude and angle):

CURRENTS				VOLTAGES			
IR	IA	IB	IC	VA	VB	VC	
1026	1039	204	212	106.0	139.0	140.4	(magnitude)
152	163	124	4	-125	113	1	(angle)
273	284	245	125	-4	234	122	(angle + 121)

In the third row, 121° are added to all angles of the second row, so as to assign the phase A voltage phasor as the -4° reference. The magnitude and shifted angles can be compared to the settings of the test set given earlier. The angle measurement errors are 1° or less, and the magnitude errors are less than 1%.

The event report indicates a fault current of 1035.1 amperes primary, which agrees well with the 1032-ampere test set phase A current referred to the primary.

The indicated fault location is 74.60 miles. The "actual" fault location is 75.00 miles. The error is 74.60 - 75.00, or -0.40 miles, which is about 0.5% of the set reach for this example.

RELAY ELEMENT STATUS INDICATORS

The states of all relay elements are indicated in the six columns headed "Relays." Active states of the various relay elements are indicated by designator symbols which correspond with the relay element names. Inactive states are indicated by periods placed in the corresponding columns. The contents of the columns for active relay elements are:

21P:	Two-phase distance units:	1=Z1	Zone 1 picked up
		2=Z2	Zone 2
		3=Z3	Zone 3
21G:	Ground distance units:	1=Z1	Zone 1 picked up
		2=Z2	Zone 2
		3=Z3	Zone 3
50P:	Phase overcurrent elements:	H=50H	high set picked up
		P=50P	picked up
		G=50G	picked up
51N:	Residual time-overcurrent:	P=51NP	51N element picked up
		T=Trip	51N trip threshold reached
67N:	Residual overcurrent element:	P=67NP	67N element picked up
		T=Trip	67N trip threshold reached
50NG:	Sensitive residual or phase overcurrent condition:	P=50NG	picked up
50N:	Sensitive residual overcurrent:	P=50N	picked up
LOP:	Loss-of-Potential detect:	L=LOP	

The states of all output and input contacts are shown in the next two groups of columns, headed "Outputs" and "Inputs". Assertion of any output or input contact is indicated by designator symbols which correspond with the output or input names. Nonassertion is indicated by a period.

The contents of the columns are:

OUTPUTS

TP	:	TRIP output
CL	:	CLOSE output
A1	:	PROGRAMMABLE output #1
TPA	:	A-phase single-pole trip output
TPB	:	B-phase single-pole trip output
TPC	:	C-phase single-pole trip output
AL	:	ALARM output

INPUTS

IN1	:	Programmable input 1
PT	:	Permissive trip input
52AA	:	A-phase breaker auxiliary switch input
52AB	:	B-phase breaker auxiliary switch input
52AC	:	C-phase breaker auxiliary switch input
EXT	:	External event report trigger input

In the example event report, both the phase overcurrent element (50P) and the sensitive phase or ground overcurrent element (50NG) are picked up for load current as indicated by the "P" in the 50P column and by the "P" in the 50NG column.

The sensitive residual overcurrent element (50N) is the first element to pick up for the fault, as indicated by the "P" in the 14th row of the event report.

The residual time-overcurrent element (51N) is the next element to pick up for the fault. This is indicated by the "P" in the 51N column in the last quarter-cycle of the fourth cycle of the event report. For almost every actual fault, the first event triggering element(s) to pick up will be found in the 16th row of data.

In the 17th row of the report, the Zone 3 ground mho element picks up, indicated by the "3" in the 21G column. In response, the programmable output A1 asserts because the Z3 element was incorporated into the PROGRAMMABLE OUTPUT A1 mask (MA1) to generate an overreaching permissive signal for a POTT scheme.

In the 19th quarter-cycle of the report, the Zone 1 ground mho element picks up. In response, the TRIP output and TRIPA output assert. The TRIP output asserts because the Z1G element was incorporated into the UNCONDITIONAL TRIP MASK (MTU) of the LOGIC settings. The TRIPA output asserts because an A-phase to ground fault is applied to the relay and the TRIP output is asserted, therefore issuing a single-pole trip for phase A.

The 52AA contact input monitored the TRIPA latching relay (circuit breaker simulator) state. This input deasserts in the 27th row of the report, indicating that the latching relay had changed to the "open" state about 2.25 cycles after tripping had been initiated.

The duration of the fault can be estimated from the total time the relay elements are picked up. They were picked up for a total of 19 quarter-cycles, or 4.75 cycles. This value is reported near the bottom of the report as: Duration: 4.75.

For further description of information in this report, see the HISTORY command description.

FIRMWARE IDENTIFICATION

This section provides a means of determining relay Firmware Identification Data (FID). The FID string is printed near the top of each long event report. The string format is as follows:

FID = [PN] - R[RN] - V[VS] - D[RD]

Where:

[PN] =	Product Name	(e.g., SEL-121S)
[RN] =	Revision Number	(e.g., 400)
[VS] =	Version Specifications	(e.g., 656mp)
[RD] =	Release Date	(e.g., YYMMDD = 900129)

For the SEL-221S family of relays, the version specifications are interpreted as follows:

V[VS] = V[ABCDE]

Option	Specifier	Specifier Meaning	Option Description
A	5, 6	50 Hz, 60 Hz	Power System Frequency
B	1, 5	1 amp, 5 amps	Nominal Amps per Phase
C	1, 6	120 volts, 67 volts	Nominal Volts per Phase
D	m, k	miles, kilometers	Fault Locator Distance Units
E	p, n	positive, negative	Phase-Sequence of Power System

Please contact Schweitzer Engineering Laboratories, Inc. for the available versions of the relay. The version specifications are not intended for ordering purposes, but are intended as an identification of the software installed in a relay.

SAMPLE EVENT REPORT

Example 230 kV Line Date: 1/1/92 Time: 09:21:23.004

FID=SEL-121S-R400-V656mp-D900129

Currents (amps)				Voltages (kV)			Relays	Outputs	Inputs
							2255655L 11017000 PGPNNNNP G	TCATTTA PL1PPPL ABC	IP555E NT222X 1 AAAT ABC
IR	IA	IB	IC	VA	VB	VC			
-4	91	113	-211	72.3	62.0	-133.4	..P..P..	.....	..ABC.
-1	-186	170	16	-112.7	118.4	-5.8	..P..P..	.....	..ABC.
4	-91	-113	211	-72.3	-62.0	133.4	..P..P..	.....	..ABC.
0	186	-170	-16	112.7	-118.4	5.8	..P..P..	.....	..ABC.
-3	91	113	-211	72.2	62.0	-133.4	..P..P..	.....	..ABC.
0	-186	170	16	-112.7	118.4	-5.8	..P..P..	.....	..ABC.
0	-91	-113	211	-72.2	-62.0	133.4	..P..P..	.....	..ABC.
3	182	-170	-19	112.7	-118.4	5.8	..P..P..	.....	..ABC.
-1	94	113	-208	72.3	62.0	-133.4	..P..P..	.....	..ABC.
-1	-182	170	19	-112.7	118.4	-5.8	..P..P..	.....	..ABC.
4	-94	-113	208	-72.3	-62.0	133.4	..P..P..	.....	..ABC.
0	186	-170	-16	112.8	-118.4	5.8	..P..P..	.....	..ABC.
-6	91	113	-211	71.4	61.8	-133.6	..P..P..	.....	..ABC.
183	-3	170	16	-107.8	119.8	-4.6	..P..PP.	.....	..ABC.
-271	-365	-113	211	-67.4	-59.2	136.0	..P..PP.	.....	..ABC.
-416	-233	-170	-16	95.6	-124.0	0.5	..PP.PP.	.....	..ABC.
706	796	116	-211	62.9	56.0	-139.2	.3PP.PP.	..1....	..ABC.
470	289	167	16	-87.6	127.3	2.5	.3PP.PP.	..1....	..ABC.
-883	-969	-116	211	-61.4	-54.9	140.2	.1PP.PP.	T.1A...	..ABC.
-478	-299	-167	-16	86.7	-127.7	-2.9	.1PP.PP.	T.1A...	..ABC.
905	991	113	-211	61.2	54.7	-140.4	.1PP.PP.	T.1A...	..ABC.
481	302	170	16	-86.5	127.8	3.0	.1PP.PP.	T.1A...	..ABC.
-907	-994	-113	211	-61.3	-54.7	140.4	.1PP.PP.	T.1A...	..ABC.
-481	-299	-170	-16	86.4	-127.8	-3.0	.1PP.PP.	T.1A...	..ABC.
907	991	113	-211	61.4	54.7	-140.4	.1PP.PP.	T.1A...	..ABC.
479	299	170	16	-86.4	127.8	2.9	.1PP.PP.	T.1A...	..ABC.
-908	-991	-113	211	-61.4	-54.7	140.4	.1PP.PP.	T.1A...	..ABC.
-478	-302	-170	-16	86.4	-127.8	-2.9	.1PP.PP.	T.1A...	...BC.
908	994	116	-208	61.5	54.8	-139.6	.1PP.PP.	T.1A...	...BC.
283	151	85	53	-86.1	126.2	-2.2	.1PP.PP.	T.1A...	...BC.
-644	-692	-41	88	-70.9	-52.1	136.3	.3PP.PP.	T.1A...	...BC.
-21	0	50	-69	92.0	-125.0	14.1	.3PP.PP.	T.1A...	...BC.
233	220	-82	94	84.2	48.1	-132.9	..PP.PP.	T..A...	...BC.
-56	0	-107	41	-99.0	125.3	-21.7	..PP.PP.	T..A...	...BC.
-68	-28	132	-164	-88.7	-46.6	131.8	..G..P..	.....	...BC.
71	0	113	-41	100.0	-125.3	22.7	..G..P..	.....	...BC.
46	3	-138	176	89.3	46.4	-131.6	..G..P..	.....	...BC.
-77	0	-116	41	-100.1	125.3	-22.8	..G..P..	.....	...BC.
-43	0	142	-182	-89.4	-46.3	131.5	..G..P..	.....	...BC.
78	0	116	-38	100.0	-125.4	22.9	..G..P..	.....	...BC.
43	0	-142	182	89.4	46.3	-131.5	..G..P..	.....	...BC.
-78	0	-113	38	-100.0	125.4	-22.9	..G..P..	.....	...BC.
-41	0	138	-182	-89.4	-46.3	131.6	..G..P..	.....	...BC.
77	0	113	-38	100.0	-125.4	22.9	..G..P..	.....	...BC.

Event : 1AG Location : 74.60 mi 6.05 ohms sec
Duration: 4.75 Flt Current: 1035.1

R1	=13.90	X1	=79.96	R0	=41.50	X0	=248.57	LL	=100.00
CTR	=200.00	PTR	=2000.00	MTA	=80.80				
79OI	=40.00	79RS	=240.00	A1TP	=0.00	A1TD	=0.00		
Z1%	=80.00	Z2%	=120.00	Z3%	=150.00				
Z2DP	=30.00	Z2DG	=20.00	Z3D	=40.00				
50NG	=100.00	50P	=200.00	50H	=3000.00				
51NP	=100.00	51NTD	=3.00	51NC	=2	51NTC	=Y		
67NP	=1200.00	67ND	=10.00	67NTC	=Y				
52BT	=30.00	POD	=60.00	LOPE	=Y	LOPA	=Y		
TIME1	=5	TIME2	=0	AUTO	=2	RINGS	=3		

Logic settings:

MTU	MPT	MTO	MA1	MRI	MRC
F3	FF	FF	FF	C0	33
50	50	50	50	00	50
00	00	00	00	00	08

INSTALLATION
TABLE OF CONTENTS

Mounting 6-1
Frame Ground Connection 6-1
Power Connections 6-1
Secondary Circuits 6-1
Control Circuits 6-2
Communications Circuits 6-2
Jumper Selection 6-2
EIA RS-232-C and IRIG-B Installation 6-3
Installation Checkout 6-5
SEL Direction and Polarity Check Form 6-12

FIGURES

Figure 6.1: SEL-221S Relay Nine-Pin Connector Pin Number Convention 6-4
Figure 6.2: Horizontal Front and Rear Panel Drawings 6-7
Figure 6.3: Relay Dimensions, Panel Cutout, and Drill Plan 6-8
Figure 6.4: Communications and Clock Connections - One Unit at One Location 6-9
Figure 6.5: Communications and Clock Connections - Multiple Units at One Location 6-9
Figure 6.6: SEL Relay Communications Diagram for Connection to the SEL-DTA 6-10
Figure 6.7: External Ac Current and Voltage Connections 6-10
Figure 6.8: External Dc Connection Diagram (Typical) 6-11
SEL Direction and Polarity Check Form 6-12

INSTALLATION

MOUNTING

The SEL-221S relay can be mounted by its front vertical flanges either vertically, or horizontally in a 19-inch vertical relay rack. It may also be mounted semi-flush in a switchboard panel. Four #10 screws should be used for this purpose.

FRAME GROUND CONNECTION

Terminal marked GND on the rear panel must be connected to frame ground for safety and performance. This terminal connects directly to the chassis ground of the instrument.

POWER CONNECTIONS

Terminals marked + and - on the rear panel must be connected to a source of control voltage. Control power passes through these terminals to the fuse or fuses and toggle switch, if installed. It then passes through a surge filter, and connects to the switching power supply. The control power circuitry is isolated from the frame ground.

SECONDARY CIRCUITS

The relay presents a very low burden to the secondary current and potential circuits. Each current circuit is independent of the other circuits. That is, there is no interconnection of current circuits inside the instrument.

The relay requires four-wire wye potentials, as it includes ground relaying functions. It is not possible to directly apply the relay to circuits where line-to-line potential transformers are used. Please consider the SEL-221D relay for such applications.

CONTROL CIRCUITS

The control inputs are dry. For example, to assert the 52AA input, control voltage must be applied to the 52AA input terminals. Each input is individually isolated, and a terminal pair is brought out for each input. There are no internal connections between control inputs.

Control outputs are dry relay contacts rated for tripping duty. Each contact is protected by a metal-oxide varistor.

COMMUNICATIONS CIRCUITS

Connections to the two EIA RS-232-C serial communications ports are made via the two nine-pin connectors, labeled PORT 1 and PORT 2R on the rear panel and PORT 2F on the front panel. Pins 5 and 9 connect directly to frame (chassis) ground. These connections should not be relied upon for safety grounding, since their current-carrying capacity is less than control-power short circuit current and protection levels.

The communications circuits are protected by low-energy, low-voltage MOVs and passive RC filters. Communications-circuit difficulties can be minimized by keeping the length of the EIA RS-232-C cables as short as possible. Lengths of twelve feet or less are recommended, however, in no case should the cable length exceed 100 feet. The use of shielded communications cable for lengths in excess of ten feet is recommended. For communications over long distances, modems are required.

Route the communications cables well away from the secondary and control circuits. Do not bundle the communications wiring with secondary or control circuit wiring. The IRIG-B clock cable should also be routed away from the control wiring and secondary circuits.

JUMPER SELECTION

All jumpers are on the front edge of the main board. They are easily accessed by removing the front panel of the relay.

EIA RS-232-C Jumpers

J105 jumper area provides for EIA RS-232-C baud rate selection. Baud rates available are 300, 600, 1200, 2400, 4800 and 9600. To select a baud rate for a particular port, place the jumper so it connects a pin labeled with the desired port to a pin labeled with the desired baud rate.

Caution: Do not select two baud rates for the same port. This can damage the baud rate generator.

Password Protection Jumpers

When JMP103 is in place the password protection is disabled. This feature is useful if passwords are not required, or if they are forgotten.

Remote Trip/Close Enable Jumper

When JMP104 is in place the remote trip/close commands may be executed. If JMP104 is removed, attempts to use the OPEN or CLOSE commands result in an "Aborted" message.

EIA RS-232-C AND IRIG-B INSTALLATION

This section contains specific information concerning pinouts of the communications ports.

The current drive for an IRIG-B "one" is 10 to 20 mA. The input circuit consists of a 56-ohm resistor in series with the photodiode input of an optical isolator. The photodiode has a forward voltage drop of about 1.5 volts. The input may be driven directly by the output of a TTL-level driver having sufficient current capability. The inputs may also be driven in a current loop from a higher-voltage driver.

A pin definition of the nine-pin port connectors and cabling information for the EIA RS-232-C ports appears below. Several types of EIA RS-232-C cables are given. These and other cables are available from SEL. Cable configuration sheets are also available at no charge for a large number of devices.

Nine-Pin Connector Pin Number Convention

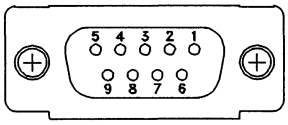

(female chassis connector, as viewed from outside panel)

Figure 6.1: SEL-221S Relay Nine-Pin Connector Pin Number Convention

EIA RS-232-C Cables

```
SEL-221S                    9-Pin *DTE DEVICE

GND  5 ------------------- 5   GND
TXD  3 ------------------- 2   RXD
RXD  2 ------------------- 3   TXD        (SEL  CABLE 234)
RTS  7 ┐
       │ Jumper
CTS  8 ┘
                      ┌ 1   DCD
                      ├ 4   DTR
               Jumper ├ 6   DSR
                      └ 8   CTS
                        9   RI

SEL-221S                    **DCE DEVICE

GND  5 ------------------- 7   GND
TXD  3 ------------------- 2   RXD
RTS  7 ------------------- 20  DTR        (SEL  CABLE 222)
RXD  2 ------------------- 3   TXD
CTS  8 ------------------- 8   CD
GND  9 ------------------- 1   GND

PRTU                        SEL-221S

GND  1 ------------------- 5   GND
TXD  2 ------------------- 2   RXD
RXD  4 ------------------- 3   TXD        (SEL  CABLE 231)
CTS  5 ------------------- 4   +12
+12  7 ------------------- 8   CTS
GND  9 ------------------- 9   GND
```

* DTE = Data Terminal Equipment (terminals, printers, computers, etc.)
** DCE = Data Communications Equipment (modems, etc.)

INSTALLATION CHECKOUT

The suggestions outlined below may be followed or combined with your normal practice. In no case should a recommendation below be followed unless it is allowed under the rules of your normal practice.

A portable terminal or computer is a convenient tool for providing local communications with the relay during checkout in the field. Such a device should be connected to PORT 2F or 2R for checkout, and PORT 2 should be designated as the automatic port using the AUTO setting in the SET command during checkout.

1. Apply control power, and verify that the startup message is received on the terminal. If it is not then set AUTO = 2, using the SET command, from Access Level 2. Using the ACCESS command and the SHOWSET command, check the settings. Set the clock using the TIME and DATE commands.

2. Apply three-phase voltages. Execute the METER command and verify that the readings are accurate. If they are not, be sure that the correct PT ratio was entered, and recall that the displayed values are in primary line-to-neutral and line-to-line kV.

3. Use the TRIGGER command to save an event record. Type the EVENT 1 command and examine the triggered event record. Referring to the top row of data as the "Y" components, and the next row as the "X" components, plot the three voltage phasors, and ensure that they are 120° apart, of reasonable magnitudes, and rotating in the positive-sequence direction. The zero-sequence voltage Y and X components (times a factor of three) are obtained by adding the three Y components of voltage together and adding the three X components of voltage together. These sums should be near zero if balanced three-phase potentials are present.

4. Use the TARGET command to check the state of all contact inputs and outputs. For example, if the connections to the circuit breaker 52A contacts are made, and if the circuit breaker is closed, the TARGET command with option 5 should show a one (1) under the 52AA, 52AB, and 52AC headings (type **TARGET 5 <ENTER>**).

5. Gain access to Access Level 2 using the 2ACCESS command and the appropriate password. Be sure that the ALARM relay contacts close and open when the 2ACCESS command is executed. (The ALARM pulse will not be detectable if the ALARM contacts are permanently closed due to any other alarm condition.)

6. The tripping function should be tested three ways. First, be sure the circuit breaker can be tripped by the relay when you execute the OPEN command. Second, the circuit breaker may be tripped when you assert the PROGRAMMABLE INPUT 1, assuming that the IN1 bit is selected in the MTU mask. The TRIP output relay opens in both of these cases after the three 52A inputs deassert, indicating that the circuit breaker has indeed opened. This function of monitoring the 52A contacts ensures that the output relays do not inadvertently open while trip coil current is flowing in response to a control operation. Third, the circuit breaker should trip when you apply voltages and currents representing a fault condition for which the relay should respond. Here, the TRIP relay

closes regardless of the state of the 52A contacts and opens when the 52A3 logic deasserts AND fault conditions no longer exist. The TRIP output always remains closed for at least 60 ms. The single-pole trip outputs (TRIPA, TRIPB, and TRIPC) all follow the TRIP output for control actions, according to the logic described in Section 3: FUNCTIONAL DESCRIPTION of this manual.

7. The circuit breaker may be closed by executing the CLOSE command. The CLOSE output relay closes for this condition, as long as the 52A3 logic is deasserted (indicating that at least one pole of the circuit breaker is indeed open). The CLOSE relay opens when the 52A3 logic is asserted, or when the reclosing relay reset interval expires, whichever occurs first.

8. If the PERMISSIVE TRIP input is used, this should also be checked for proper operation. (See the LOGIC MPT setting.) An event report is generated for assertion of the PT input.

9. Asserting the EXTERNAL TRIGGER input should trigger the recording of an event record. It does not affect the protective relaying functions in any way.

10. Use the STATUS command to inspect the self test status. You may wish to save the reading as part of an "as-left" record. When local checkout is complete, communications with the instrument via a remote interface (if used) should be tested. Be sure, in particular, that the automatic port is properly assigned, and that the desired timeout intervals are selected for each port. Also, be sure to record password settings.

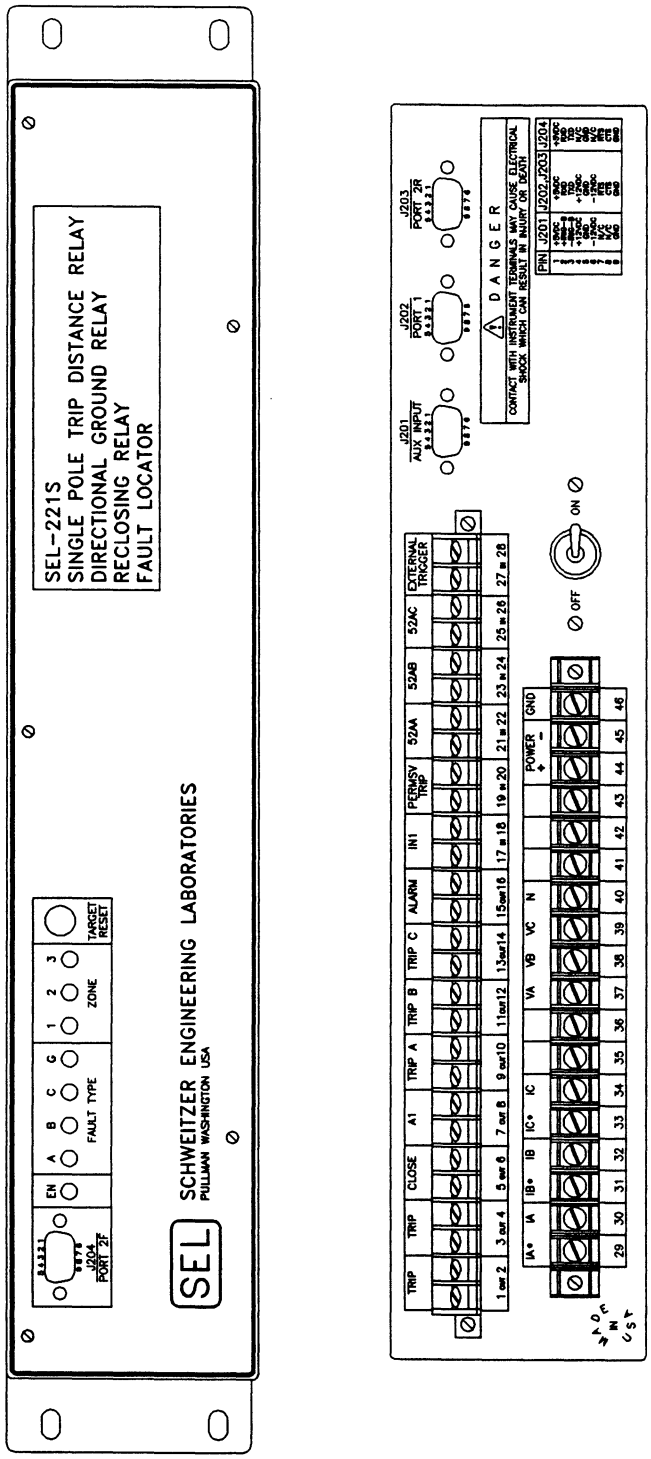

Figure 6.2: Horizontal Front and Rear Panel Drawings

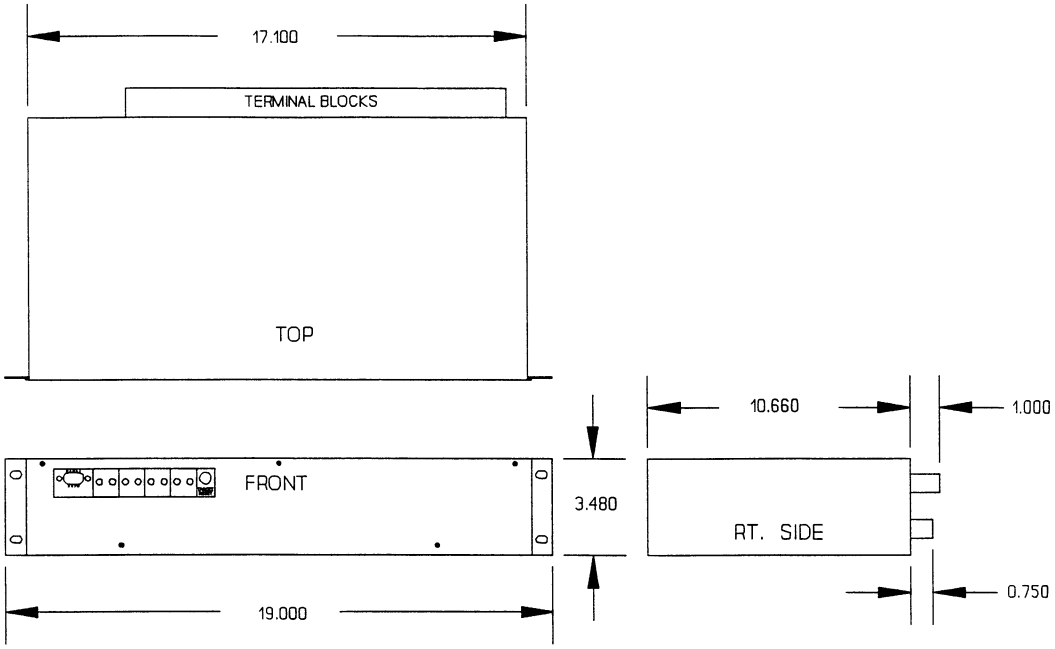

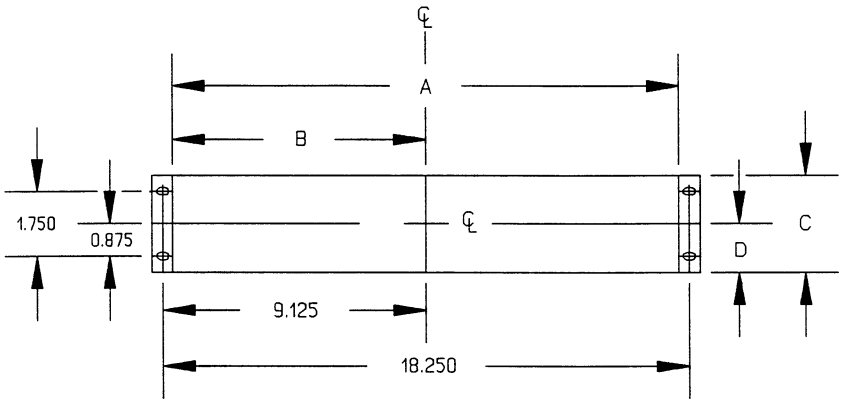

DIMENSION	CUTOUT	PREFERRED
A . . .	17.20— 17.80 . .	17.30
B . . .	8.60— 8.90 . .	8.65
C . . .	3.52— 3.60 .	3.56
D . . .	1.76— 1.80 . .	1.78

NOTE: ALL INSTRUMENTS MAY BE MOUNTED HORIZONTALLY (AS SHOWN ABOVE) OR VERTICALLY

ALL DIMENSIONS ARE IN INCHES

Figure 6.3: Relay Dimensions, Panel Cutout, and Drill Plan

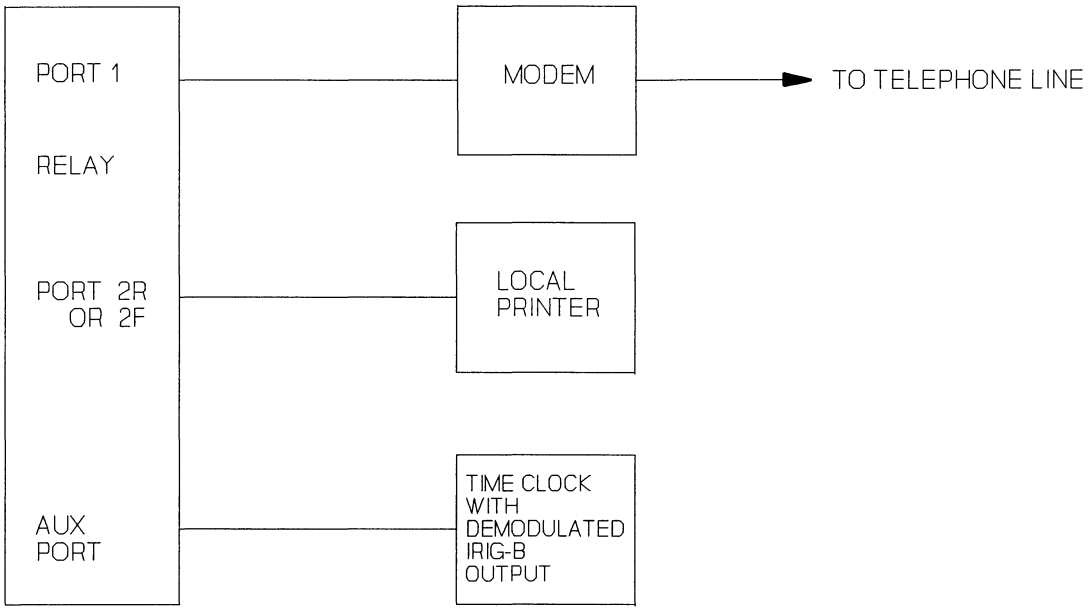

Figure 6.4: Communications and Clock Connections - One Unit at One Location

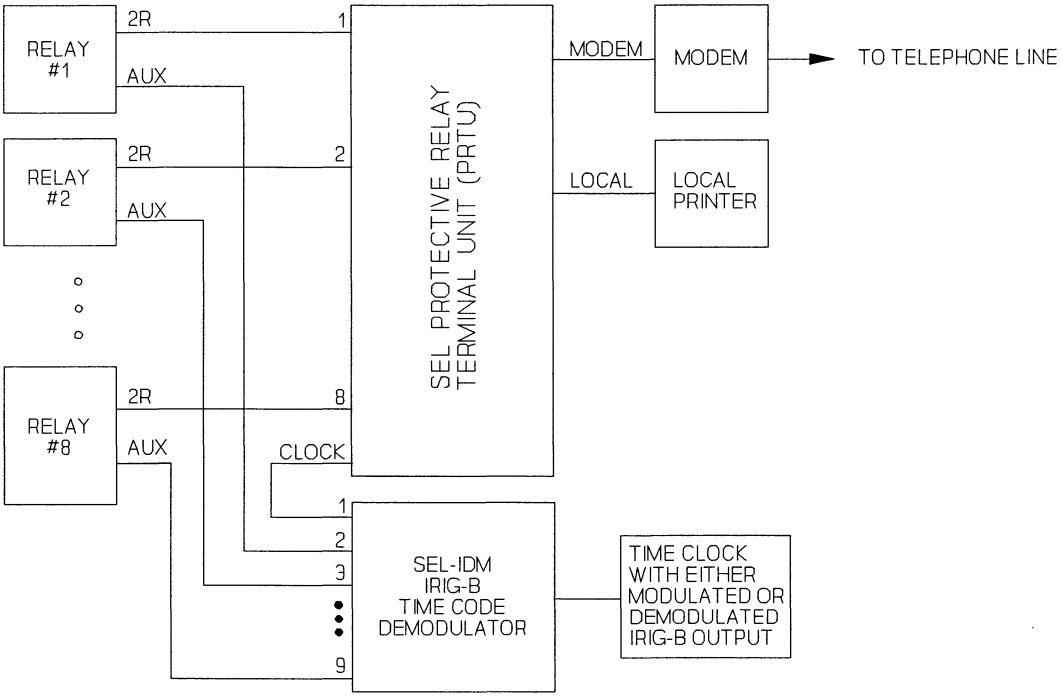

Figure 6.5: Communications and Clock Connections - Multiple Units at One Location

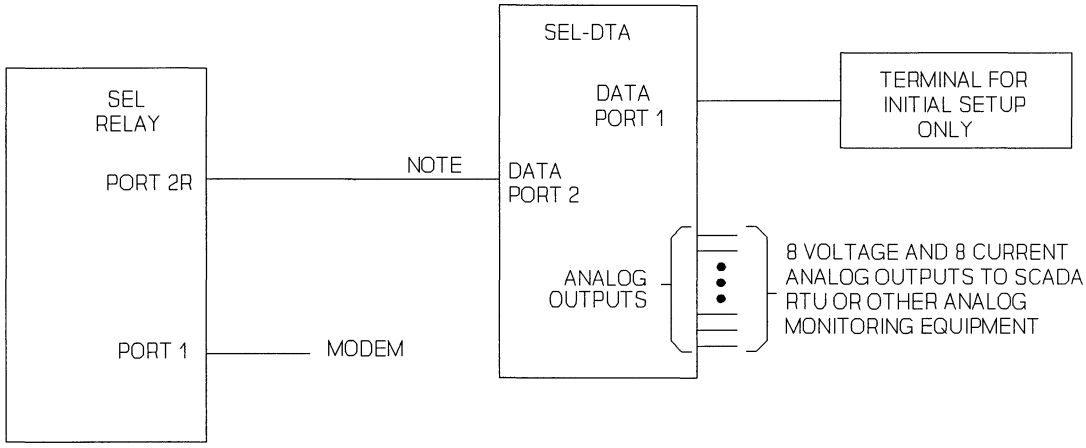

Figure 6.6: SEL Relay Communications Diagram for Connection to the SEL-DTA

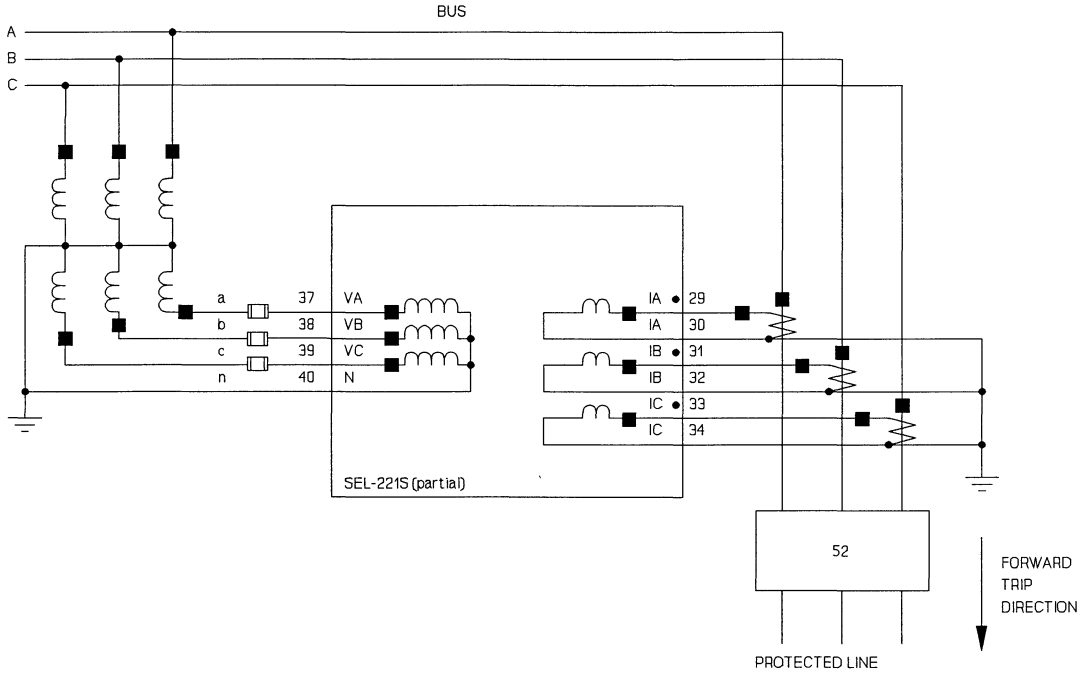

Figure 6.7: External Ac Current and Voltage Connections

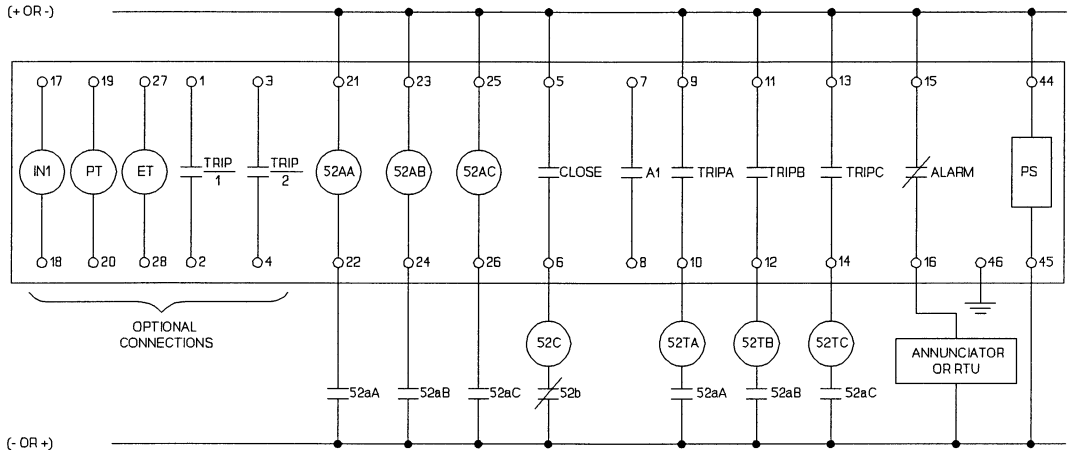

Figure 6.8: External Dc Connection Diagram (Typical)

SEL DIRECTION AND POLARITY CHECK FORM

STATION _____ DATE: ___/___/___ TESTED BY _____

SWITCH NO. _____ EQUIPMENT _____

INSTALLATION _____ ROUTINE _____ OTHER _____

LOAD CONDITIONS:

STATION READINGS: _____ MW (OUT)(IN) _____ MVAR (OUT)(IN) _____ VOLTS _____ AMPS

SEL READINGS: _____ MW (+)(-) _____ MVAR (+)(-)

AS SEEN ON SCREEN	Ia	Ib	Ic	Va	Vb	Vc	
COMPANY NOTATION	I( )	I( )	I( )	V( )	V( )	V( )	
1st LINE CHOSEN (Y COMPONENT)							
2nd LINE CHOSEN (X COMPONENT)							
CALCULATED MAGNITUDE $\sqrt{X^2 + Y^2}$							ROW 1
ANGLE IN DEGREES ARCTAN Y/X							
VALUE OF Va DEGREES TO SUBTRACT TO OBTAIN Va DEGREES = 0							
@ Va DEGREES = 0, ANGLE USED TO DRAW PHASOR DIAGRAM							ROW 2

USE THE VALUES IN ROWS 1 AND 2 ABOVE TO DRAW PHASOR DIAGRAMS BELOW

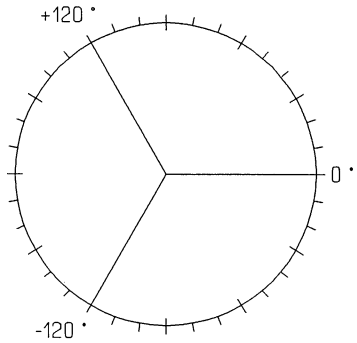

CURRENTS

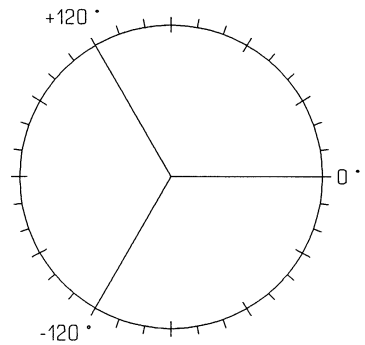

VOLTAGES

SEL DIRECTION AND POLARITY CHECK FORM

STATION _____ DATE: ___/___/___ TESTED BY _____

SWITCH NO. _____ EQUIPMENT _____

INSTALLATION _____ ROUTINE _____ OTHER _____

LOAD CONDITIONS:

STATION READINGS: _____ MW (OUT)(IN) _____ MVAR (OUT)(IN) _____ VOLTS _____ AMPS

SEL READINGS: _____ MW (+)(-) _____ MVAR (+)(-)

AS SEEN ON SCREEN	Ia	Ib	Ic	Va	Vb	Vc	
COMPANY NOTATION	I( )	I( )	I( )	V( )	V( )	V( )	
1st LINE CHOSEN (Y COMPONENT)							
2nd LINE CHOSEN (X COMPONENT)							
CALCULATED MAGNITUDE $\sqrt{X^2 + Y^2}$							ROW 1
ANGLE IN DEGREES ARCTAN Y/X							
VALUE OF Va DEGREES TO SUBTRACT TO OBTAIN Va DEGREES = 0							
@ Va DEGREES = 0, ANGLE USED TO DRAW PHASOR DIAGRAM							ROW 2

USE THE VALUES IN ROWS 1 AND 2 ABOVE TO DRAW PHASOR DIAGRAMS BELOW

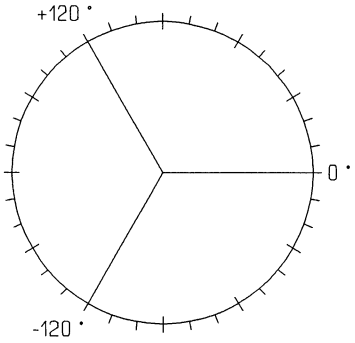

CURRENTS

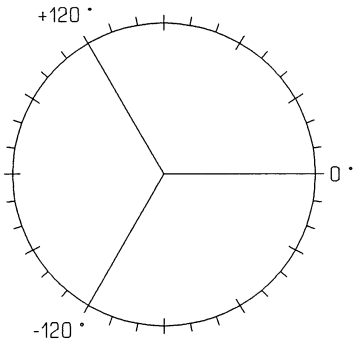

VOLTAGES

MAINTENANCE AND TESTING
TABLE OF CONTENTS

SEL-221S Test Procedure 7-1
Removal of Front Panel and Drawout Assembly 7-7
Calibration 7-7
Troubleshooting Guide 7-7
Program to Compute Test Set Settings for Testing Distance Relays 7-15

MAINTENANCE AND TESTING

SEL-221S TEST PROCEDURE

Testing the SEL-221S relay consists of performing the Initial Checkout described near the beginning of the Instruction Manual and completing the additional steps described here.

Initial Checkout

Please follow the steps in Section 2: INITIAL CHECKOUT section of the Instruction Manual. The Initial Checkout procedure makes it easy to set up the relay for testing, and ensures that it is generally functional.

Setting Test

To ensure the SEL-221S relay accepts settings, perform the following steps:

1. Gain Level 2 Access. (See ACCESS and 2ACCESS commands.)

2. Type **SET <ENTER>**.

3. Change one setting. For example, change Zone 1 reach from 80 to 82%.

4. Type **END** to complete the setting procedure. Type in **YES** to the prompt: "OK (Y or N) ?". The ALARM contact should close momentarily while the relay computes internal settings, if no alarm condition presently exists (such as self test failure).

5. Use the SHOWSET command to inspect the settings, and ensure that your change was accepted.

6. Use the SET and SHOWSET commands again to restore and check the settings.

7. Type LOG MTU.

8. Change one bit.

9. Complete the logic setting procedure.

10. Type LOG MTU again, and observe that the bit change is present. Restore the setting, and use the command again to check the restored setting.

METER Test

This test checks the magnitude accuracy and phase balance of the relay. It is a single-phase test.

1. Connect the voltage input terminals VA, VB, and VC together, and apply about 50 Vac from those terminals to the neutral point, N.

2. Connect the current inputs in series, and apply a current of five amperes through the three inputs. One way to do this without a test set is to derive this current using a resistor and a stepdown transformer, energized from the same source providing the 50 Vac input to the voltage inputs, so that the phase angle between the current and the voltage is nearly zero.

3. Using the METER command, inspect the measured voltages, currents, and power. Voltages VA, VB, and VC should equal the applied voltage times the potential transformer ratio setting (PTR). With the Example 230 kV Line settings, you should obtain:

$$VA = VB = VC = 50 \times 2000 = 100 \text{ kV} \quad (\pm 0.5\%)$$

Voltages VAB, VBC, and VCA should be less than 1.5 kV.

Similarly, currents IA, IB and IC should equal the applied current times the current transformer ratio. With the Example 230 kV Line settings, you should obtain:

$$IA = IB = IC = 5 \times 200 = 1000 \text{ A} \quad (\pm 1\%)$$

Difference currents IAB, IBC, and ICA should be less than 20 amperes.

The power reading should be:

$$VA \times IA + VB \times IB + VC \times IC = 300 \text{ MW}$$

The reactive power reading should be less than 5 MVAR.

Phase-to-Phase Mho Relay Testing

The three-phase test described below is recommended. The status of any mho element may be observed using the TARGET command. The total output of any zone may be observed using a programmable output relay and setting the logic mask for that relay to observe the selected element.

The steps below apply to any of the three zones. When testing the Zone 2 phase-to-phase mho element, set Z2DP equal to 3.0 cycles.

1. Connect a relay test set capable of providing four-wire voltages and at least one current to the relay. To connect the set for testing a phase-to-phase element, connect the current source so that the current enters the dotted end of one phase and exits the dotted end of the other phase. For example, for a BC test, inject the current into B-dot, connect the undotted B and C current terminals together, and connect C-dot to the current source return terminal.

2. Determine the voltages and currents required for a fault on the boundary at the maximum-reach point of the relay. An easy and convenient way to do this is to use the short BASIC program given at the end of this section. Using zero source impedance further simplifies the test. (Entering Z0=Z1 into the BASIC program allows you to use the single-phase fault current calculation for phase A as the three-phase fault current calculation.)

   For example, using the Example 230 kV Line settings, we see the CT/PT ratio is 0.1, so the secondary-ohm line data to enter into the BASIC program are:

   $$Z1 = 1.39 + j\,7.996 \quad \text{ohms}$$
   $$Z0 = 1.39 + j\,7.996 \quad \text{ohms}$$

   Enter 0 for ground fault resistance.

   Enter 0 for source-to-bus impedance.

   To test Zone 1, which is set to 80% of the line, enter 0.8 for the per-unit distance from the bus to the fault. The program computes the test set voltages and currents for AG and BC faults 0.8 pu or 80 miles away from the bus. Since the 80.8° MTA setting places the mho circle diameter on the transmission line positive-sequence impedance characteristic, the computed voltages and currents test the mho characteristic at its point of maximum reach along its maximum torque angle.

   The computer screen shows the voltages and current for a phase-A-to-ground fault, on a system with Z0=Z1. For a three-phase fault IA is the same, and IB and IC are equal in magnitude to IA, but at angles of ±120° from IA.

   The screen also shows the voltages and currents for a BC fault.

   For the example settings, the display for the Zone 1 boundary conditions is:

VA	VB	VC	IA	IB	IC	
67	67	67	10.3	0	0	A-G
0	-120	+120	-80	0	0	
67	67	67	0	8.9	8.9	B-C
0	-120	+120	0	-170	+10	

Thus, for a Zone 1 boundary three-phase fault, the test set would be set for 67 volts per phase, and 10.3 amps per phase, with the currents lagging the voltages by 80°.

3. To obtain two other convenient test points, consider a square inscribed in the mho circle with one diagonal being the diameter along the MTA. The two corners of that square on the other diagonal are reached by increasing the current by a factor of 1.414, at angles of ±45° away from the angle obtained from the BASIC program.

   For our three-phase example, the required currents are 10.3 x 1.414 = 14.6 amperes, at the angles listed below:

IA	IB	IC	
-35	-155	85	degrees (MTA + 45°)
-125	115	-5	degrees (MTA - 45°)

4. Test the relay at the three current settings for all three zones. (MTA, MTA + 45, MTA - 45)

Ground Mho Relay Testing

TARGET 1 displays the status of the mho elements for observation. The total output of any zone may be observed using a programmable output relay and setting the logic mask for that relay to observe the selected element.

1. Connect a relay test set capable of providing four-wire voltages and at least one current to the relay. Connect the test set for testing a phase-A-ground fault.

2. Determine the voltages and current required for a fault on the boundary at maximum reach point of the zone to be tested. Use the BASIC program given in the Appendices.

   For the Example 230 kV Line settings, the CT/PT ratio is 0.1, so the secondary-ohm line data to enter into the BASIC program are:

$$Z1 = 1.39 + j\ 7.996 \text{ ohms}$$
$$Z0 = 4.15 + j\ 24.857 \text{ ohms}$$

   Enter 0 for ground fault resistance. Enter .2 for source-to-bus impedance. Enter 0.8 per-unit distance from the bus to the fault for a Zone 1 boundary fault. The program computes the test set voltages and currents for AG and BC faults 0.8 pu or 80 miles away from the bus. Since the 80.8° MTA setting places the mho circle diameter on the transmission line positive-sequence impedance characteristic, the computed voltages and currents test the mho characteristic at its point of maximum reach along its maximum torque angle.

The computer screen shows the voltages and current for a phase-A-to-ground fault as follows:

VA	VB	VC	IA	IB	IC	
53.6	70.0	69.9	4.85	0	0	A - G
0	-124	+124	-80	0	0	

3. To obtain two other convenient test points, consider a square inscribed in the mho circle with one diagonal being the diameter along the MTA. The two corners of that square on the other diagonal are reached by increasing the current by a factor of 1.414, at angles of ±45° away from the angle obtained from the BASIC program. For the phase-A-to-ground fault the required phase-A current magnitude is 4.85 x 1.414 = 6.86 amperes, at the angles listed below:

IA	
-35°	(MTA + 45°)
-125°	(MTA - 45°)

4. Test the relay at the three phase-A current settings for all three zones. (MTA, MTA+45, MTA-45)

Directional Element Checking

Use the TARGET command to observe the 32Q bit by typing TAR 2. The 32Q bit status is now displayed on the first LED from the right of the relay targets. (Use the SET command to disable the LOP scheme, to prevent test-condition voltages from setting the loss-of-potential condition.)

The negative-sequence element is checked as follows.

Apply VA = 30 volts, VB = 0, VC = 0. This results in an applied V2 = 10 volts.

Apply IA = 3 amperes, corresponding to a negative-sequence current of 1 ampere.

Move the phase of the current with respect to the voltage, and observe the boundary of the directional element at MTA ±90°.

Overcurrent Element Checking

Pickup of the 51N residual time-overcurrent element is easily checked by first typing TARGET 2 in Access Level 2, so that TARGET 2, with the residual time-overcurrent element bit, is displayed on the target LEDs. Disable the directional function for this test. (Set 51NTC = N.)

Apply current to one phase, and observe the pickup and dropout of the element.

In a similar manner check the pickup and dropout of the phase overcurrent elements. To display the 50H bit on the LEDs use TARGET 1. The 50P and 50NG bits are displayed on the LEDs using TARGET 2. Apply current to one phase, and observe the pickup and dropout of each element.

Testing the Input Circuits

1. In Access Level 2, use the TARGET command to set the LEDs to follow the contact inputs, by typing TAR 5.

2. Apply control voltage to each input, and observe that the corresponding target LED turns on. Event reports should be triggered whenever you energize the IN1, PT, and ET inputs.

Testing the Serial Ports

The Initial Checkout procedure assumes that you connect a terminal to PORT 2. Set the baud rate of PORT 1 to the same value as that of PORT 2, and switch your terminal from PORT 2 to PORT 1. Ensure that you can communicate through this port. If your relay includes front and rear panel PORT 2 connections, ensure that both ports operate correctly.

Testing the IRIG-B Time Code Input

1. Connect a source of demodulated IRIG-B time code to the relay Auxiliary Port, with a series resistor to monitor the current. Adjust the source to obtain an "ON" current of about 10 mA.

2. In Access Level 2, execute the IRIG command, and ensure that the SEL-221S relay clock shows the correct time and date.

Note: A convenient, inexpensive way to test the IRIG-B port is to use a recording of the IRIG-B signal, passed through a simple demodulator. Please contact the factory for further details.

Testing the Power Supply Voltages

1. Execute the STATUS command and inspect the voltage readings for the +5 and ± 15 volt supplies.

2. At the Auxiliary Port, use a voltmeter to read the +5 and ±12 volt outputs. The 12 volt outputs are derived from the 15 volt supplies using three-terminal regulators.

3. Compare the +5 volt readings from the status report and the voltmeter. The voltage difference should be less than 50 mV, and both readings should be within 0.15 volts of five volts.

4. The 12 volt supplies should be within 0.5 volt of their nominal values.

REMOVAL OF FRONT PANEL AND DRAWOUT ASSEMBLY

TO PREVENT SHOCK HAZARD, POWER TO THE RELAY MUST BE INTERRUPTED BEFORE REMOVING THE FRONT PANEL ASSEMBLY.

1. Disconnect external power source.

2. Remove the front panel screws.

3. Front panel may be hinged forward and left connected, or removed by disconnecting the display board ribbon cable and the power switch/fuse connector (if installed).

4. Remove the two hex head screws from under the forward outside edges of the drawout assembly.

5. Disconnect the analog input connector from the main board (P104) on the SEL-221S. It is the right-most connector. For the SEL-221S, remove connectors J106 and J108 from under the main circuit board.

6. Remove drawout assembly by pulling on spacers located on bottom of the tray with your index fingers.

CALIBRATION

The SEL-221S Relay is factory calibrated. If you suspect that the relay is out of calibration, please contact the factory.

TROUBLESHOOTING GUIDE

Inspection Procedure

The inspection procedure given below should be completed before the system is disturbed. After finishing the inspection procedure, proceed to the troubleshooting table.

1. Measure and record control power voltage present at terminals marked + and -.

2. Check to see that the power is on, but do NOT turn system off if it is on.

3. Measure and record the voltage present at all control inputs.

4. Measure and record the state of all output relays.

5. Inspect the cabling to the serial communications ports, and be sure that a communications device is connected to at least one communications port.

Troubleshooting Table

All Front Panel LEDs Dark

1. Power is off.
2. Blown fuse.
3. Input power is not present.
4. Self test failure.
5. Target command improperly set.

Note: For 1, 2, 3, or 4, the ALARM relay contacts should be closed.

System Does Not Respond to Commands

1. Communications device not connected to system.
2. Relay or communications device at incorrect baud rate or other communication parameter incompatibility, including cabling error.
3. Internal ribbon cable connector loose or disconnected (for SEL-121S only).
4. System is processing event record. (Wait several seconds.)
5. System is attempting to transmit information, but cannot due to handshake line conflict. (Check communications cabling.)
6. System is in the XOFF state, halting communications. (Type **<CTRL> Q** to put system in XON state.)

Tripping Output Relay Remains Closed Following Fault

1. 52A inputs remain asserted (i.e., circuit breaker auxiliary contact did not open with breaker).
2. Auxiliary contact inputs improperly wired.
3. Output relay contacts burned closed.
4. Failure of interface circuit.

No Prompting Message Issued to Terminal upon Power-Up

1. Terminal not connected to system.

2. Wrong baud rate.

3. Improper connection of terminal to system.

4. Other port designated as the AUTOMATIC port. (See AUTO setting in the SET command.)

5. Port timeout interval set to a value other than zero.

6. Failure of main board or interface circuit.

System Does Not Respond to Faults

1. Relay improperly set. Review your settings using the SET and LOGIC commands.

2. Test set improperly set.

3. CT or PT input cable wiring error. Check input voltages and currents with METER command; and with TRIGGER and EVENT sequence.

4. Analog input cable between transformer-termination and main board loose or defective.

5. Relay built-in-test failure. Check built-in-test status with STATUS command.

Terminal Displays Meaningless Characters

1. Baud rate incorrectly set. Check terminal configuration. (See Section 4: COMMANDS AND SERIAL COMMUNICATIONS of manual.)

Self-Test Failure: +5 Volts

1. Power supply +5 volt output out of tolerance. (See STATUS command.)

2. A/D converter failure.

Self-Test Failure: +15 Volts

1. Power supply +15 volt output out of tolerance. (See STATUS command.)

2. A/D converter failure.

Self-Test Failure: -15 Volts

1. Power supply -15 volt output out of tolerance. (See STATUS command.)
2. A/D converter failure.

Self-Test Failure: Offset

1. Offset drift. (Adjust offsets)
2. A/D converter drift.
3. Loose ribbon cable from transformers to main board (in SEL-121S only).

Self-Test Failure: ROM Checksum

1. EPROM failure. (Replace EPROM)

Self-Test Failure: RAM

1. Failure of static RAM IC. (Replace RAM)

Self-Test Failure: A/D Converter

1. A/D converter failure.
2. RAM error not detected by RAM test.

Stall Relay Closed (Alarm)

1. Power is off.
2. Blown fuse.
3. Power supply failure.
4. Improper EPROM or EPROM failure.
5. Main board or interface circuit failure.

Firmware Upgrade Instructions, SEL-121S Relay

SEL may occasionally offer firmware upgrades to improve the performance of your relay. These instructions explain how to install new firmware.

The modifications require that you power down the relay, remove its front panel, pull out the drawout unit, exchange several integrated circuit chips, and reassemble the relay. If you do not wish to perform the modifications yourself, we can assist you. Simply return the relay and integrated circuit chips to us. We will install the new chips and return the unit to you within a few days.

Warning: This procedure requires that you handle electrostatic discharge sensitive components. If your facility is not equipped to work with these components, we recommend that you return the relay to SEL for firmware installation.

Upgrade Instructions

1. If the relay is in service, disable its control functions.

2. Turn off control power to the relay.

3. Remove the front panel by unscrewing the four front panel screws (one in each corner).

4. With the front panel leaning forward, you can see the aluminum drawout chassis. The main board is attached to the top of the drawout chassis. The power supply and interface board are attached to the bottom of the drawout chassis. Several ribbon cables connect the boards to each other and to other portions of the relay.

5. Disconnect the analog input ribbon cable (the right-most cable) from the main board.

6. The front panel display cable connects the relay interface board to the front panel display board. It is located on the left side of the front panel. Disconnect this cable from the display board.

7. Two hex head screws hold the drawout chassis in place. These screws are on the bottom of the chassis in each front corner. Remove both screws.

8. Remove the drawout assembly by pulling the spacers on the bottom of the drawout chassis. You should be able to remove the assembly with your fingers.

9. Because steps 10 through 12 involve handling electrostatic discharge (ESD) sensitive devices and assemblies, perform these steps at an ESD safe work station. This will help prevent possible damage by electrostatic discharge.

10. Note the orientation of the ICs to be replaced. Use a small screwdriver to pry the indicated ICs free from their sockets. Be careful not to bend the IC pins or damage adjacent components.

11. Carefully place the new ICs in the appropriate sockets.

12. Check the orientation of the ICs. Be sure that each IC is in its corresponding socket. Look for IC pins that bent under or did not enter a socket hole.

13. Slide the drawout assembly back into the relay chassis. Using your fingers, push the assembly in until the retaining screw holes in the drawout assembly align with corresponding holes in the relay chassis.

14. Install the retaining screws and reconnect the two ribbon cables.

15. With breaker control disabled, turn relay power back on and enter your settings. Execute the STATUS, METER, and TRIGGER commands to ensure that all functions are operational. Set and record your Access Level 1 and 2 passwords and the date and time. The relay is now ready to resume protective functions.

16. Please return the old ICs to Schweitzer Engineering Laboratories, Inc. in the same packing materials. New chips are shipped with a mailing label to simplify this process. When we receive the old parts, we will record a firmware upgrade for each of your relays.

Firmware Upgrade Instructions, SEL-221S Relay

1. If the relay is in service, disable its control functions. Turn off control power to the relay.

2. Remove the relay front panel by unscrewing the five front panel screws. With the front panel removed, you can see the aluminum drawout chassis. The main board is attached to the top of the drawout chassis. The power supply and transformer assembly are attached to the bottom of the relay chassis.

3. Disconnect the power supply and transformer secondary cables from the underside of the drawout assembly.

4. Remove the drawout assembly by pulling the spacers on the bottom of the drawout chassis. You should be able to remove the assembly with your fingers. Because steps 5 and 6 involve handling electrostatic discharge (ESD) sensitive devices and assemblies, perform these steps at an ESD safe work station. This will help prevent possible damage by electrostatic discharge.

5. Note the orientation of the ICs to be replaced. Use a small screwdriver to pry the indicated ICs free from their sockets. Be careful not to bend the IC pins or damage adjacent components.

6. Carefully place the new ICs in the appropriate sockets. Check the orientation of the ICs. Be sure that each IC is in its corresponding socket. Look for IC pins that bent under or did not enter a socket hole.

7. Slide the drawout assembly into the relay chassis. Using your fingers, push the assembly in until the front of the assembly is flush with the front of the relay chassis. Reconnect the power supply and transformer secondary cables to the receivers on the underside of the drawout assembly. Replace the relay front panel.

8. With breaker control disabled, turn relay power on and enter your settings. Execute the STATUS, METER, and TRIGGER commands to ensure that all functions are operational. Set and record your Access Level 1 and 2 passwords and the date and time. The relay is now ready to resume protective functions.

Factory Assistance

If you have any questions regarding the performance, application, or repair of this or any other SEL product, do not hesitate to contact the factory. Our staff is happy to assist you.

Schweitzer Engineering Laboratories, Inc.
2350 NE Hopkins Court
Pullman, WA 99163-5603
Tel: (509) 332-1890
FAX: (509) 332-7990

SCHWEITZER ENGINEERING LABORATORIES, INC.
Making Electric Power Safer, More Reliable, and More Economical

ONEBUS: PROGRAM TO COMPUTE TEST SET SETTINGS FOR TESTING DISTANCE RELAYS

The BASIC program in this note determines voltages and currents which would appear on distance relay terminals for ground and phase faults on a radial system with source impedance at the same angle as line impedance. It is useful in determining test voltage and current settings for SEL distance relays and fault locating equipment.

The program was initially designed to run on a TRS-80 Model 100 briefcase computer but may be installed on virtually any personal computer or laptop.

The program first prompts you for the positive and zero-sequence impedances of the transmission line. Enter the data in secondary ohms for the entire length of the protected line.

Next, you may enter fault resistance, which is used in the ground-fault computations.

Enter source impedance as a per-unit value with a base of the previously-entered transmission line data. For example, if the radial system has a source impedance of about ten percent of the entered line impedance, enter 0.1 for the per-unit distance from the source to the bus.

Specify the distance from the bus to the fault as a fraction of the total line length. To obtain the voltages and currents for a fault one-half the way down the line from the bus, enter 0.5 for the distance from the bus to the fault.

After you enter this data, the program begins computations. The display then shows voltages and currents for both an AG and BC fault. These data can be entered into any active test source.

The bottom line of the display offers you a choice of entering new impedance data (I), changing the distance from the source to the bus (B), specifying a new fault location (F), or quitting (Q).

Home Office: 2350 NE Hopkins Court • Pullman, WA USA 99163-5603 Tel: (509) 332-1890 Fax: (509) 332-7990
Eastern Office: 71 E Rambler • Holland, PA USA 18966-2034 Tel & Fax: (215) 322-5226
Central Office: 140 Iowa Ave, Suite 201 • Belleville, IL USA 62220-3940 Tel: (618) 233-1010 Fax: (618) 233-1042

```
1      REM SCHWEITZER ENGINEERING LABORATORIES, INC.
2      REM 2350 NE Hopkins Court
3      REM Pullman, WA  99163-5603
4      REM
10     REM COMPUTE DOBLE SETTINGS FOR A ONE-BUS SYSTEM
20     REM HOMOGENEOUS SYSTEM
30     REM SOURCE VOLTS= 67 L-N
40     REM
50     REM ENTER IMPEDANCES FOR 100% OF LINE
60     INPUT "ENTER Z1: R,X";R1,S1
70     INPUT "ENTER Z0: R,X";R0,S0
75     INPUT "ENTER RF FOR GND FLTS";RF
80     REM
90     REM ENTER BUS LOC. FROM SOURCE
100    INPUT "DIST SOURCE TO BUS (PU OF LINE)";S
120    INPUT "DIST BUS TO FAULT (PU OF LINE)";F
130    REM
140    REM  PHASE A TO GROUND
150    REM COMPUTE POS SEQ CURRENT
160    X = R0+2*R1: Y = S0+2*S1
170    R3 = R1-R0:   S3 = S1-S0
180    AR=1/(S+F):  AI=0
190    BR=X      :  BI=Y
195    BR=BR+3*RF/(S+F)
200    GOSUB 2000
210    I = RR    :   J = RI
220    IA = 3*67*I:  JA=3*67*J
225    IB=0:JB=0:IC=0:JC=0
230    AR=X:AI=Y:BR=I:BI=J
232    GOSUB 1000
234    UA=67*(1-S*RR):VA=67*(-S*RI)
240    AR=R3      :AI=S3
250    BR=I       :BI=J
260    GOSUB 1000
270    TR=S*RR    :TS=S*RI
280    UB=67*(-0.5+TR)
290    VB=67*(-SQR(3)/2+TS)
300    UC=67*(-0.5+TR)
310    VC=67*(SQR(3)/2+TS)
315    FF$="A-G"
320    GOSUB 4041
500    REM  B-C FAULT
510    AR=1: AI=0
520    BR=2*R1*(S+F):BI=2*S1*(S+F)
530    GOSUB 2000
540    I=RR:J=RI
550    IA=0:JA=0
560    AR=I:AI=J:BR=0:BI=-67*SQR(3)
570    GOSUB 1000
580    IB=RR:JB=RI:IC=-IB:JC=-JB
590    UA=67:VA=0
600    AR=I:AI=J:BR=S*RI:BI=S*S1
610    GOSUB 1000
620    AR=RR:AI=RI:BR=0:BI=SQR(3)
630    GOSUB 1000
635    TR=RR:TS=RI
640    UB=67*(-0.5+TR)
650    VB=67*(-SQR(3)/2+TS)
660    UC=67*(-0.5-TR)
670    VC=67*(0.5*SQR(3)-TS)
675    FF$="B-C"
680    GOSUB 4041
900    INPUT "IMP BUS FAULT OR QUIT (I,B,F,Q)";A$
910    IF A$ = "I" THEN GOTO 50
920    IF A$ = "B" THEN GOTO  75
930    IF A$ = "F" THEN GOTO 120 ELSE GOTO 999
999    END
1000   REM MULT SUBROUTINE
1010   REM AR,AI * BR,BI = RR,RI
1020   RR=AR*BR-AI*BI
1030   RI=AI*BR+AR*BI
1040   RETURN
2000   REM DIVISION SUBROUTINE
2010   REM AR,AI / BR,BI = RR,RI
2020   D = BR*BR + BI*BI
2030   RR = AR*BR + AI*BI
2040   RR = RR/D
2050   RI = BR*AI - AR*BI
2060   RI = RI/D
2070   RETURN
3000   REM RECT TO POLAR CONV
3010   REM AR,AI, TO RH, TH
3020   PI = 3.14159265358
3030   IF (AR=0 AND AI=0) THEN    RH=0: TH=0: RETURN
3040   IF (AR=0 AND AI>0) THEN    RH=AI: TH=90:RETURN
3050   IF (AR=0 AND AI<0) THEN RH=-AI: TH=-90: RETURN
3060   IF (AR>0) THEN TH=(180/PI)*ATN(AI/AR)
3070   IF (AR<0) THEN TH=(180/PI)*ATN(AI/AR)+180
3080   IF TH>180 THEN TH = TH-360
3090   RH=SQR(AR*AR+AI*AI)
3100   RETURN
4041   AR=UA:AI=VA:GOSUB 3000
4042   UA=RH:VA=TH
4043   AR=UB:AI=VB:GOSUB 3000
4044   UB=RH:VB=TH-VA
4045   AR=UC:AI=VC:GOSUB 3000
4046   UC=RH:VC=TH-VA
4047   AR=IA:AI=JA:GOSUB 3000
4048   IA=RH:JA=TH-VA
4049   AR=IB:AI=JB:GOSUB 3000
4050   IB=RH:JB=TH-VA
4055   AR=IC:AI=JC:GOSUB 3000
4060   IC=RH:JC=TH-VA
4061   VA=0
4100   PRINT " VA   VB   VC   IA   IB   IC"
4130   PRINT USING"##.# ";UA;UB;UC;IA;IB;IC,
4132   PRINT FF$
4140   PRINT USING"#### ";VA;VB;VC;JA;JB;JC
4150   RETURN
```

INTERNAL DIAGRAMS
TABLE OF CONTENTS

Parts Placement Diagram

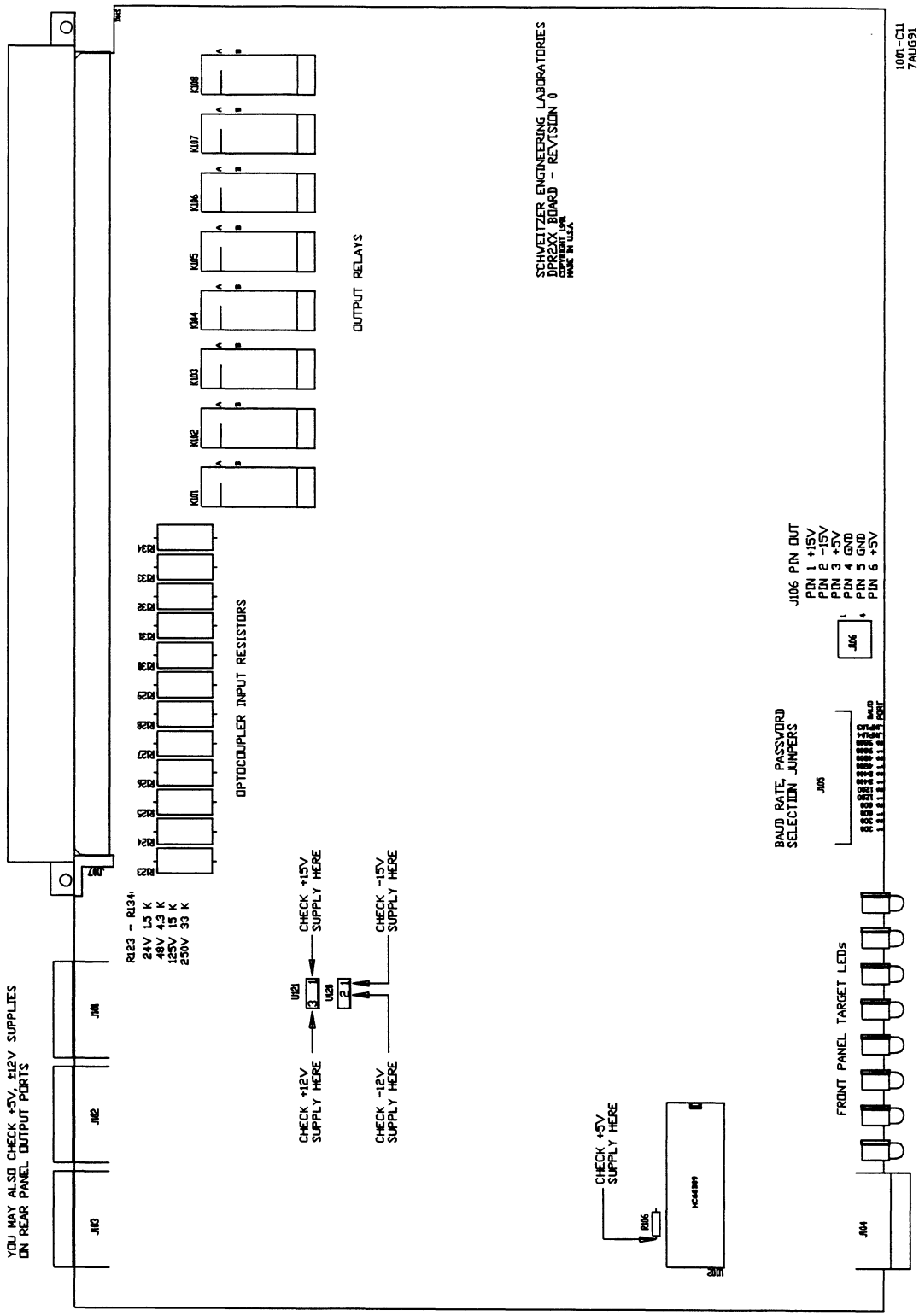

SEL-200 Series Relay Main Board Troubleshooting Test Points and Jumper Locations

SEL-221S RELAY/FAULT LOCATOR COMMAND SUMMARY

Access Level 0

ACCESS Answer password prompt (if password protection is enabled) to enter Access Level 1. Three unsuccessful attempts pulse ALARM contacts closed for one second.

Access Level 1

2ACCESS Answer password prompt (if password protection is enabled) to enter Access Level 2. This command always pulses the ALARM contacts closed for one second.

DATE m/d/y Show or set date. DAT 2/3/91 sets date to Feb. 3, 1991. IRIG-B time code input overrides existing month and day settings. DATE pulses ALARM contacts when year entered differs from year stored.

EVENT Show event record. EVE 1 shows newest event; EVE 12 shows oldest.

HISTORY Show DATE, TIME, TYPE, DIST (distance), DUR (duration), and CURR (maximum fault current) for the last twelve events.

IRIG Force immediate attempt to synchronize internal relay clock to time code input.

METER n Display primary phase-to-neutral and phase-to-phase voltages and currents and real and reactive power. Option N displays meter data N times.

QUIT Return control to Access Level 0; return target display to Relay Targets.

SHOWSET Display settings without affecting them.

STATUS Show self test status.

TARGET n k Show data and set target LEDs as follows:

TAR 0:	Relay Targets	TAR 1:	Relay Word row #1
TAR 2:	Relay Word row #2	TAR 3:	Relay Word row #3
TAR 4:	Internal Elements	TAR 5:	Contact Input States
TAR 6:	Contact Output States	TAR R:	Clears Targets and returns to TAR 0

Option k displays target data k times.

TIME h/m/s Show or set time. TIM 13/32/00 sets clock to 1:32:00 PM. IRIG-B synchronization overrides this setting.

TRIGGER Trigger and save an event record (event type is EXT).

Access Level 2

CLOSE Close circuit breaker, if allowed by jumper setting.

LOGIC n Show or set logic masks MTU, MPT, MTO, MA1, MRI, and MRC. Command pulses ALARM contacts closed for one second and clears event buffers when new settings are stored.

OPEN Open circuit breaker, if allowed by jumper setting.

PASSWORD Show or set passwords. Command pulses ALARM contacts closed momentarily after password entry. PAS 1 OTTER sets Level 1 password to OTTER. PAS 2 TAIL sets Level 2 password to TAIL.

SET n Initiate set procedure. Optional n directs relay to begin setting procedure at that setting. SET LL initiates setting procedure at LL setting. SET initiates setting procedure at beginning. Command pulses ALARM contacts closed and clears event buffers when new settings are stored.

SCHWEITZER ENGINEERING LABORATORIES, INC.
2350 NE Hopkins Court
Pullman, WA 99163-5603
TEL: (509) 332-1890 FAX: (509) 332-7990

Copyright © 1992.
All rights reserved. SEL®/5-92, Rev. 2

EXPLANATION OF EVENT REPORT

Example 230 kV Line Date: 1/1/92 Time: 09:21:23.004

FID=SEL-121S-R400-V656mp-D900129

Currents (amps)				Voltages (kV)			Relays	Outputs	Inputs
							2255655L	TCATTTA	IP555E
							11017000	PL1PPPL	NT222X
IR	IA	IB	IC	VA	VB	VC	PGPNNNNP G	ABC	1 AAAT ABC
-271	-365	-113	211	-67.4	-59.2	136.0	..P..PP.	.....	..ABC.
-416	-233	-170	-16	95.6	-124.0	0.5	..PP.PP.	.....	..ABC.
706	796	116	-211	62.9	56.0	-139.2	.3PP.PP.	..1....	..ABC.
470	289	167	16	-87.6	127.3	2.5	.3PP.PP.	..1....	..ABC.
-883	-969	-116	211	-61.4	-54.9	140.2	.1PP.PP.	T.1A...	..ABC.
-478	-299	-167	-16	86.7	-127.7	-2.9	.1PP.PP.	T.1A...	..ABC.

Event : 1AG Location : 74.60 mi 6.05 ohms sec
Duration: 4.75 Flt Current: 1035.1

```
R1   =13.90    X1   =79.96    R0   =41.50    X0   =248.57   LL   =100.00
CTR  =200.00   PTR  =2000.00  MTA  =80.80
79OI =40.00    79RS =240.00   A1TP =0.00     A1TD =0.00
Z1%  =80.00    Z2%  =120.00   Z3%  =150.00
Z2DP =30.00    Z2DG =20.00    Z3D  =40.00
50NG =100.00   50P  =200.00   50H  =3000.00
51NP =100.00   51NTD=3.00     51NC =2        51NTC=Y
67NP =1200.00  67ND =10.00    67NTC=Y
52BT =30.00    POD  =60.00    LOPE =Y        LOPA =Y
TIME1=5        TIME2=0        AUTO =2        RINGS=3
```

Currents and voltages are in primary Amps and kV. Rows are 1/4 cycle apart. Time runs down page. Obtain phasor RMS value and angle using any entry as Y-component, and the entry immediately underneath as the X-component. For example, from bottom rows, IAY = -969, IAX = -299. Therefore, IA = 1014 amps RMS primary, at an angle of ATAN(-969/-299) = -107 degrees, with respect to the sampling clock.

```
<FID>            Firmware Identification Data
<Relays>         columns show states of internal relay elements   ---> Designators
                 21P : two-phase distance....... : Z1, Z2, Z3     ---> 1,2,3
                 21G : ground distance.......... : Z1, Z2, Z3     ---> 1,2,3
                 50P : phase overcurrent........ : 50H, 50P, 50G  ---> H,P,G
                 51N : residual time-overcurrent : 51NP, 51NT     ---> P,T
                 67N : inst ground overcurrent.. : 67NP, 67NT     ---> P,T
                 50NG: res/phase overcurrent.... :                ---> P
                 50N : residual overcurrent..... :                ---> P
                 LOP : loss of potential logic.. :                ---> L
<Outputs>                columns show states of output contacts:  OFF = "."
                 T=TRIP, C=CLOSE, A1=PROGRAMMABLE, A=TPA, B=TPB, C=TPC, A=ALARM
<Inputs>         columns show states of input contacts:
                        IN1=PROG. INPUT 1, PT=PERMISSIVE TRIP, 52AA=A PHASE PCB,
                        52AB=B PHASE PCB, 52AC=C PHASE PCB, EXT=EXTERNAL TRIGGER
<Event>          Fault indications are "ZT" where Z indicates zone and T type
                        Z is one of 1=Zone 1, 2=Zone 2, 3=Zone 3, 5=51N, 6=67N
                               H=50H, "?" = indeterminate zone
                        T is one of AG,BG,CG = single-phase, AB,BC,CA = 2-phase
                               ABG,BCG,CAG = two-phase to ground, ABC = 3-phase
                               followed by a "T" if a TRIP triggered the report
                        Other indications are TRIP = triggered by TRIP output
                               and EXT = externally or otherwise triggered
<Location>       Distance to fault in miles. 999999 is indeterminate distance
<ohms sec>       Distance to fault in secondary ohms. 999999 is indeterminate
<Duration>       Fault duration determined from relay element(s) pickup time
<Flt Current>    Max phase current (primary amps) taken near middle of fault
R1,X1,R0,X0      Primary series impedance settings for transmission line
LL               Line length corresponding to specified line impedances
CTR, PTR         Current and potential transformer ratios (XTR:1)
MTA              Maximum Torque angle
79OI, RS         One-shot recloser Open and Reset intervals
A1TP, TD         A1 contact output pickup and dropout delays
Z1%,Z2%,Z3%      Reaches of three- and two-phase mhos, percent of line length (LL)
Z2PD, G, Z3D     Zone 2 timer for phase and ground faults, Zone 3 timer for both phase and
                     ground faults.
50NG, P, H       Residual/Phase, phase and high set overcurrent
51NP, TD, C, TC  GND time-overcurrent Pickup, Time-Dial, Curve, Torque Control
67NP, D, TC      Inst ground overcurrent Pickup, Delay, Torque Control
52BT             52B delay setting (for switch-onto-fault coordination)
POD              Pole Open Delay
LOPE, LOPA       Loss-of-Potential Enable, Alarm
TIME1,2          Communications port timeout intervals (automatic log-off)
AUTO             Port assignment for automatic message transmissions
RINGS            Number of rings to wait before modem answers telephone
<Logic settings>     See LOGIC command for a description of mask settings
```

SEL-221S RELAY/FAULT LOCATOR COMMAND SUMMARY

Access Level 0

ACCESS Answer password prompt (if password protection is enabled) to enter Access Level 1. Three unsuccessful attempts pulse ALARM contacts closed for one second.

Access Level 1

2ACCESS Answer password prompt (if password protection is enabled) to enter Access Level 2. This command always pulses the ALARM contacts closed for one second.

DATE m/d/y Show or set date. DAT 2/3/91 sets date to Feb. 3, 1991. IRIG-B time code input overrides existing month and day settings. DATE pulses ALARM contacts when year entered differs from year stored.

EVENT Show event record. EVE 1 shows newest event; EVE 12 shows oldest.

HISTORY Show DATE, TIME, TYPE, DIST (distance), DUR (duration), and CURR (maximum fault current) for the last twelve events.

IRIG Force immediate attempt to synchronize internal relay clock to time code input.

METER n Display primary phase-to-neutral and phase-to-phase voltages and currents and real and reactive power. Option N displays meter data N times.

QUIT Return control to Access Level 0; return target display to Relay Targets.

SHOWSET Display settings without affecting them.

STATUS Show self test status.

TARGET n k Show data and set target LEDs as follows:

TAR 0:	Relay Targets	TAR 1:	Relay Word row #1
TAR 2:	Relay Word row #2	TAR 3:	Relay Word row #3
TAR 4:	Internal Elements	TAR 5:	Contact Input States
TAR 6:	Contact Output States	TAR R:	Clears Targets and returns to TAR 0

Option k displays target data k times.

TIME h/m/s Show or set time. TIM 13/32/00 sets clock to 1:32:00 PM. IRIG-B synchronization overrides this setting.

TRIGGER Trigger and save an event record (event type is EXT).

Access Level 2

CLOSE Close circuit breaker, if allowed by jumper setting.

LOGIC n Show or set logic masks MTU, MPT, MTO, MA1, MRI, and MRC. Command pulses ALARM contacts closed for one second and clears event buffers when new settings are stored.

OPEN Open circuit breaker, if allowed by jumper setting.

PASSWORD Show or set passwords. Command pulses ALARM contacts closed momentarily after password entry. PAS 1 OTTER sets Level 1 password to OTTER. PAS 2 TAIL sets Level 2 password to TAIL.

SET n Initiate set procedure. Optional n directs relay to begin setting procedure at that setting. SET LL initiates setting procedure at LL setting. SET initiates setting procedure at beginning. Command pulses ALARM contacts closed and clears event buffers when new settings are stored.

SCHWEITZER ENGINEERING LABORATORIES, INC.
2350 NE Hopkins Court
Pullman, WA 99163-5603
TEL: (509) 332-1890 FAX: (509) 332-7990

Copyright © 1992.
All rights reserved. SEL®/5-92, Rev. 2

EXPLANATION OF EVENT REPORT

Example 230 kV Line Date: 1/1/92 Time: 09:21:23.004

FID=SEL-121S-R400-V656mp-D900129

Currents (amps)				Voltages (kV)			Relays	Outputs	Inputs
							2255655L	TCATTTA	IP555E
							11017000	PL1PPPL	NT222X
IR	IA	IB	IC	VA	VB	VC	PGPNNNNP G	ABC	1 AAAT ABC
-271	-365	-113	211	-67.4	-59.2	136.0	..P..PP.	.....	..ABC.
-416	-233	-170	-16	95.6	-124.0	0.5	..PP.PP.	.....	..ABC.
706	796	116	-211	62.9	56.0	-139.2	.3PP.PP.	..1....	..ABC.
470	289	167	16	-87.6	127.3	2.5	.3PP.PP.	..1....	..ABC.
-883	-969	-116	211	-61.4	-54.9	140.2	.1PP.PP.	T.1A...	..ABC.
-478	-299	-167	-16	86.7	-127.7	-2.9	.1PP.PP.	T.1A...	..ABC.

Event : 1AG Location : 74.60 mi 6.05 ohms sec
Duration: 4.75 Flt Current: 1035.1

```
R1   =13.90    X1   =79.96    R0   =41.50    X0   =248.57   LL   =100.00
CTR  =200.00   PTR  =2000.00  MTA  =80.80
79OI =40.00    79RS =240.00   A1TP =0.00     A1TD =0.00
Z1%  =80.00    Z2%  =120.00   Z3%  =150.00
Z2DP =30.00    Z2DG =20.00    Z3D  =40.00
50NG =100.00   50P  =200.00   50H  =3000.00
51NP =100.00   51NTD=3.00     51NC =2        51NTC=Y
67NP =1200.00  67ND =10.00    67NTC=Y
52BT =30.00    POD  =60.00    LOPE =Y        LOPA =Y
TIME1=5        TIME2=0        AUTO =2        RINGS=3
```

Currents and voltages are in primary Amps and kV. Rows are 1/4 cycle apart. Time runs down page. Obtain phasor RMS value and angle using any entry as Y-component, and the entry immediately underneath as the X-component. For example, from bottom rows, IAY = -969, IAX = -299. Therefore, IA = 1014 amps RMS primary, at an angle of ATAN(-969/-299) = -107 degrees, with respect to the sampling clock.

```
<FID>            Firmware Identification Data
<Relays>         columns show states of internal relay elements   ---> Designators
                 21P : two-phase distance....... : Z1, Z2, Z3     ---> 1,2,3
                 21G : ground distance.......... : Z1, Z2, Z3     ---> 1,2,3
                 50P : phase overcurrent........ : 50H, 50P, 50G  ---> H,P,G
                 51N : residual time-overcurrent : 51NP, 51NT     ---> P,T
                 67N : inst ground overcurrent.. : 67NP, 67NT     ---> P,T
                 50NG: res/phase overcurrent.... :                ---> P
                 50N : residual overcurrent..... :                ---> P
                 LOP : loss of potential logic.. :                ---> L
<Outputs>                columns show states of output contacts:  OFF = "."
                 T=TRIP, C=CLOSE, A1=PROGRAMMABLE, A=TPA, B=TPB, C=TPC, A=ALARM
<Inputs>         columns show states of input contacts:
                        IN1=PROG. INPUT 1, PT=PERMISSIVE TRIP, 52AA=A PHASE PCB,
                        52AB=B PHASE PCB, 52AC=C PHASE PCB, EXT=EXTERNAL TRIGGER
<Event>          Fault indications are "ZT" where Z indicates zone and T type
                        Z is one of 1=Zone 1, 2=Zone 2, 3=Zone 3, 5=51N, 6=67N
                               H=50H, "?" = indeterminate zone
                        T is one of AG,BG,CG = single-phase, AB,BC,CA = 2-phase
                               ABG,BCG,CAG = two-phase to ground, ABC = 3-phase
                               followed by a "T" if a TRIP triggered the report
                        Other indications are TRIP = triggered by TRIP output
                               and EXT = externally or otherwise triggered
<Location>       Distance to fault in miles. 999999 is indeterminate distance
<ohms sec>       Distance to fault in secondary ohms. 999999 is indeterminate
<Duration>       Fault duration determined from relay element(s) pickup time
<Flt Current>    Max phase current (primary amps) taken near middle of fault
R1,X1,R0,X0      Primary series impedance settings for transmission line
LL               Line length corresponding to specified line impedances
CTR, PTR         Current and potential transformer ratios (XTR:1)
MTA              Maximum Torque angle
79OI, RS         One-shot recloser Open and Reset intervals
A1TP, TD         A1 contact output pickup and dropout delays
Z1%,Z2%,Z3%      Reaches of three- and two-phase mhos, percent of line length (LL)
Z2PD, G, Z3D     Zone 2 timer for phase and ground faults, Zone 3 timer for both phase and
                     ground faults.
50NG, P, H       Residual/Phase, phase and high set overcurrent
51NP, TD, C, TC  GND time-overcurrent Pickup, Time-Dial, Curve, Torque Control
67NP, D, TC      Inst ground overcurrent Pickup, Delay, Torque Control
52BT             52B delay setting (for switch-onto-fault coordination)
POD              Pole Open Delay
LOPE, LOPA       Loss-of-Potential Enable, Alarm
TIME1,2          Communications port timeout intervals (automatic log-off)
AUTO             Port assignment for automatic message transmissions
RINGS            Number of rings to wait before modem answers telephone
<Logic settings>     See LOGIC command for a description of mask settings
```