SEL-3350-1
Automation Controller

Instruction Manual

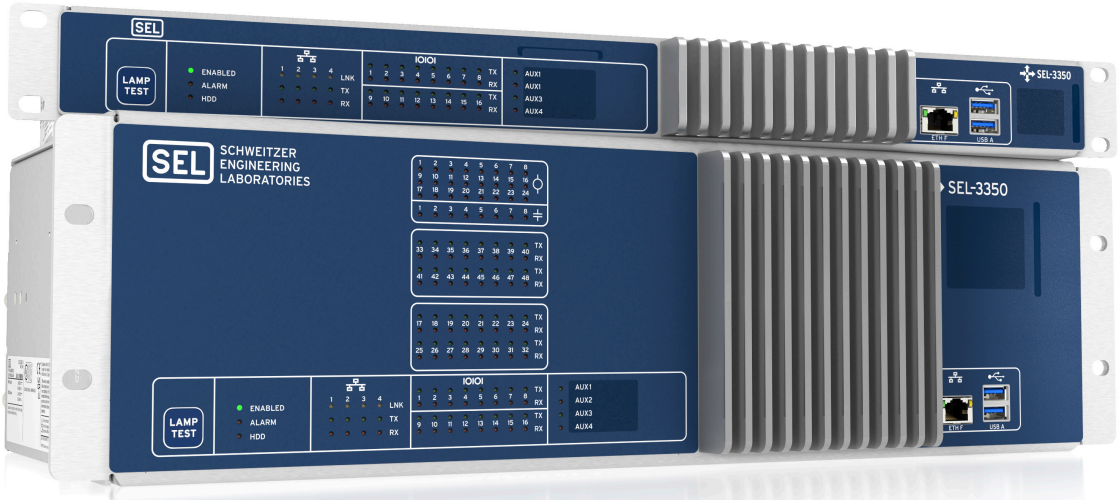

20241218

SEL SCHWEITZER ENGINEERING LABORATORIES

© 2020–2024 Schweitzer Engineering Laboratories, Inc. All rights reserved.

Content subject to change without notice. Unless otherwise agreed in writing, all SEL product sales are subject to SEL's terms and conditions located here: https://selinc.com/company/termsandconditions/.

Part Number: PM3350-01

Table of Contents

Preface

Overview....ix
Safety Information.... x
General Information.... xiv

Section 1: Introduction and Specifications

Overview.... 1
Features.... 1
Models and Options.... 2
Applications....4
Specifications.... 11

Section 2: Installation

Overview....25
Unit Placement and Maintenance.... 25
Front Panel.... 28
Rear Panel.... 30
Initial Checkout and Startup.... 35

Section 3: Hardware Setup and Serviceability

Overview....37
Mainboard.... 37
Power Supply....41
SATA Drives....44
System Jumpers....46
Ethernet Ports....47
Serial Ports.... 49
IRIG-B Input/Output.... 54
Contact Inputs and Outputs....55
Watchdog....59

Section 4: BIOS Setup

Overview....61
Main Menu.... 62
System Configuration Menu.... 63
Features Menu....64
Security Menu.... 64
Boot Menu....64
Save & Exit Menu.... 65
Event Logs Menu.... 65
BIOS Updates.... 65
Recovery Mode.... 65

Section 5: Operating Systems and Software Installation

Overview....67
Operating System Installation....67
Driver Installation.... 68
Software Installation....68

Section 6: System Software and Settings

Overview....71
SEL Alarm Service....71
SNMP Agent Extension....73
Support Utilities....74
Ethernet Port Settings....75
Serial Port Settings....78
Contact Input and Output Settings....80
IRIG-B and Ethernet Time Synchronization....81
SEL Management Interface....92

Section 7: Software Backup and Failure Recovery

Overview....111
Backup and Recovery Methods....112

Section 8: Troubleshooting

Overview....115
Operational Issues....115
Application Guides....118
Technical Support....118

Appendix A: Manual Versions

Instruction Manual....119

Appendix B: Cybersecurity Features

Introduction and Security Environment....123
Version Information....124
Commissioning and Decommissioning....125
External Interfaces....127
Access Controls....129
Logging Features....130
Backup and Restore....130
Malware Protection Features....131
Product Updates....131
Contact SEL....133

Glossary

List of Figures

Figure 1.1 Engineering Communication Through a Serial Access Point..... 5
Figure 1.2 Engineering Communication Through a Network Access Point.....6
Figure 1.3 Protocol Conversion..... 7
Figure 1.4 Distribute Time With Serial Communications Cable..... 7
Figure 1.5 System Control and Synchrophasor Data Concentration..... 8
Figure 1.6 SCADA Communication Through a Single Access Point.....9
Figure 1.7 Security Through a Single Access Point..... 10
Figure 1.8 Automate and Integrate With Communication and Logic..... 11
Figure 2.1 SEL-3350 1U Rack-Mount Dimensions.....26
Figure 2.2 SEL-3350 1U Panel-Mount Dimensions..... 26
Figure 2.3 SEL-3350 3U Rack-Mount Dimensions.....27
Figure 2.4 SEL-3350 3U Panel-Mount Dimensions..... 28
Figure 2.5 SEL-3350 1U Front-Panel Rack-Mount Option.....28
Figure 2.6 SEL-3350 3U Front-Panel Rack-Mount Option.....29
Figure 2.7 SEL-3350 1U Rear-Panel.....30
Figure 2.8 SEL-3350 3U Rear-Panel.....30
Figure 2.9 Power Connections..... 34
Figure 3.1 Mainboard Diagram..... 37
Figure 3.2 1U Chassis Top Panel Removal..... 39
Figure 3.3 3U Chassis Top Panel Removal..... 39
Figure 3.4 Power Supply Fuse Location..... 42
Figure 3.5 Power Supply Fuse Location (3U Chassis Power Supply Module)..... 44
Figure 3.6 SATA Drive Slots and Cover Panel.....44
Figure 3.7 SSD Drive Bay Jumpers..... 46
Figure 3.8 SFP Module Components.....48
Figure 3.9 RJ45 Serial Connector Pin Numbers on SEL-3350..... 50
Figure 3.10 SEL-C605A Cable..... 51
Figure 3.11 SEL-C659 Cable.....51
Figure 3.12 IN101 and OUT101 Terminal Designations on 1U (left) and 3U (right) Chassis..... 55
Figure 4.1 BIOS Setup Main Screen.....62
Figure 6.1 Time Synchronization Data Flow..... 81
Figure 6.2 Example Linux PTP Device List..... 85

This page intentionally left blank

List of Tables

Table 1.1 Popular Applications.... 4
Table 1.2 System Power Consumption.... 22
Table 1.3 Peripheral Connection Rated Current Output.... 23
Table 3.1 System Jumper Descriptions.... 46
Table 3.2 EIA-232 and EIA-422/485 Serial Port Connector Pin Definition for Ports 1–16.... 50
Table 3.3 IN101 and OUT101 Terminal Connections.... 55
Table 3.4 Watchdog Settings.... 60
Table 6.1 SEL Alarm Service Data Sources.... 72
Table 6.2 Windows Settings.... 75
Table 6.3 Linux Settings.... 76
Table 6.4 Serial Port Advanced Settings.... 78
Table 6.5 Linux Serial Port Advanced Settings.... 80
Table 6.6 Windows PTP Registry Configuration.... 84
Table 6.7 ptp4l Configuration File Common Settings.... 89
Table 6.8 Common Class Properties.... 92
Table 6.9 Data Provider Class Additional Properties.... 93
Table 6.10 Contact Input Class Additional Properties.... 93
Table 6.11 Contact Output Class Additional Property.... 94
Table 6.12 Jumper Class Additional Property.... 94
Table 6.13 LED Class Additional Properties.... 95
Table 6.14 Port Class Additional Properties.... 95
Table 6.15 Power Supply Class Additional Properties.... 95
Table 6.16 Time Class Additional Properties.... 96
Table 6.17 SFP Module Diagnostics Class Additional Properties.... 98
Table 6.18 SFP Module Identification Class Additional Properties.... 98
Table 6.19 Contact Input Class Properties.... 100
Table 6.20 Contact Output Class Property.... 100
Table 6.21 General Purpose I/O Class Properties.... 101
Table 6.22 Serial Expansion Board Overcurrent Class Property.... 103
Table 6.23 LED Class Property.... 103
Table 6.24 Power Supply Class Properties.... 103
Table 6.25 Time Class Properties.... 104
Table 6.26 MultiUart Class Properties.... 107
Table 6.27 SFP Module Diagnostics Class Properties.... 108
Table 6.28 SFP Module Identification Class Properties.... 108
Table 8.1 Blank Monitor Troubleshooting.... 115
Table A.1 Instruction Manual Revision History.... 119
Table B.1 View Version Information in SEL-3300 Series Components.... 124
Table B.2 Logical Ports for Intel AMT on SEL-3355 and SEL-3360.... 128
Table B.3 BIOS/UEFI and Firmware.... 132
Table B.4 Device Drivers and Software.... 132
Table B.5 Application Software.... 133

This page intentionally left blank

Preface

Overview

This manual includes necessary information to properly install and configure the SEL-3350.

The scope of this manual covers the product information described in the following list of manual sections and topics:

Section 1: Introduction and Specifications. Top-level features, functions, and specifications.

Section 2: Installation. Mounting and wiring the SEL-3350.

Section 3: Hardware Setup and Serviceability. Configuring and servicing the SEL-3350 hardware components and I/O interfaces.

Section 4: BIOS Setup. Accessing and configuring BIOS settings.

Section 5: Operating Systems and Software Installation. Installing an operating system and additional software.

Section 6: System Software and Settings. Using the SEL-3350 system monitoring interface.

Section 7: Software Backup and Failure Recovery. Using backup tools to create a backup copy of the system configuration.

Section 8: Troubleshooting. Common issues regarding configuring and operating the SEL-3350.

Appendix A: Manual Versions. Manual versions. Change log for manual versions.

Appendix B: Cybersecurity Features. Cybersecurity features of the SEL-3350.

Information on bundled application software is outside the scope of this manual. Refer to any included software manuals, quick-start guides, or online help files for information on software applications.

Safety Information

Dangers, Warnings, and Cautions

This manual uses three kinds of hazard statements, defined as follows:

⚠DANGER
Indicates a potentially hazardous situation that, if not avoided, **will** result in death or serious injury.

⚠WARNING
Indicates a potentially hazardous situation that, if not avoided, **could** result in death or serious injury.

⚠CAUTION
Indicates a potentially hazardous situation that, if not avoided, **may** result in minor or moderate injury or equipment damage.

Safety Symbols

The following symbols are often marked on SEL products.

	⚠CAUTION Refer to accompanying documents.	**⚠ATTENTION** Se reporter à la documentation.
	Earth (ground)	Terre
	Protective earth (ground)	Terre de protection
	Direct current	Courant continu
	Alternating current	Courant alternatif
	Both direct and alternating current	Courant continu et alternatif
	Instruction manual	Manuel d'instructions

Safety Marks

The following statements apply to this device.

Table 1 General Safety Marks

⚠ **CAUTION** There is danger of explosion if the battery is incorrectly replaced. Replace only with Panasonic No. BR-2330A or equivalent recommended by manufacturer. See Owner's Manual for safety instructions. The battery used in this device may present a fire or chemical burn hazard if mistreated. Do not recharge, disassemble, heat above 100°C or incinerate. Dispose of used batteries according to the manufacturer's instructions. Keep battery out of reach of children.	⚠ **ATTENTION** Une pile remplacée incorrectement pose des risques d'explosion. Remplacez seulement avec un Panasonic No. BR-2330A ou un produit équivalent recommandé par le fabricant. Voir le guide d'utilisateur pour les instructions de sécurité. La pile utilisée dans cet appareil peut présenter un risque d'incendie ou de brûlure chimique si vous en faites mauvais usage. Ne pas recharger, démonter, chauffer à plus de 100°C ou incinérer. Éliminez les vieilles piles suivant les instructions du fabricant. Gardez la pile hors de la portée des enfants.
⚠ **CAUTION** To ensure proper safety and operation, the equipment ratings, installation instructions, and operating instructions must be checked before commissioning or maintenance of the equipment. The integrity of any protective conductor connection must be checked before carrying out any other actions. It is the responsibility of the user to ensure that the equipment is installed, operated, and used for its intended function in the manner specified in this manual. If misused, any safety protection provided by the equipment may be impaired.	⚠ **ATTENTION** Pour assurer la sécurité et le bon fonctionnement, il faut vérifier les classements d'équipement ainsi que les instructions d'installation et d'opération avant la mise en service ou l'entretien de l'équipement. Il faut vérifier l'intégrité de toute connexion de conducteur de protection avant de réaliser d'autres actions. L'utilisateur est responsable d'assurer l'installation, l'opération et l'utilisation de l'équipement pour la fonction prévue et de la manière indiquée dans ce manuel. Une mauvaise utilisation pourrait diminuer toute protection de sécurité fournie par l'équipement.
For use in Pollution Degree 2 environment.	Pour l'utilisation dans un environnement de Degré de Pollution 2.
Ambient air temperature shall not exceed 40°C (104°F) in locations where touch temperature safety is required.	La température de l'air ambiant ne doit pas dépasser 40 °C (104 °F) dans les endroits où la sécurité relative à la température de surface est requise.

Terminal Connections
- Ring Lug Screw Terminal
  - #8 Ring Terminal Recommended
  - Power Wiring
    - Insulation: 300 V min
    - Size: 14–16 AWG
    - Wire Type: Copper
  - Ring Lug Tightening Torque
    - Minimum: 1.0 Nm (9 in-lb)
    - Maximum: 2.0 Nm (18 in-lb)
  - Mounting Ear Tightening Torque
    - Minimum: 0.9 Nm (8 in-lb)
    - Maximum: 1.4 Nm (12 in-lb)
- Compression Screw Terminal
  - Crimp Ferrule Recommended
  - Input/Output Wiring
    - Insulation: 300 V min
    - Size: 14–18 AWG
    - Wire Type: Copper
  - Compression Screw Tightening Torque
    - Minimum: 0.6 Nm (5 in-lb)
    - Maximum: 0.8 Nm (7 in-lb)
  - Mounting Ear Tightening Torque
    - Minimum: 0.18 Nm (1.6 in-lb)
    - Maximum: 0.25 Nm (2.2 in-lb)
- Grounding Screw
  - #6 Ring Terminal Recommended
  - Ground Wiring
    - Insulation: 300 V min
    - Size: 14 AWG, length <3 m
    - Wire Type: Copper
  - Tightening Torque
    - Minimum: 0.9 Nm (8 in-lb)
    - Maximum: 1.4 Nm (12 in-lb)

Connexions de borne
- Borne à vis à cosse annulaire
  - Borne à anneau n° 8 recommandée
  - Câblage d'alimentation
    - Isolation: 300 V min
    - Taille: 14 à 16 AWG
    - Type de fil: cuivre
  - Couple de serrage des cosses annulaires
    - Minimum: 1,0 Nm (9 lbf in)
    - Maximum: 2,0 Nm (18 lbf in)
  - Couple de serrage des oreilles de montage
    - Minimum: 0,9 Nm (8 lbf in)
    - Maximum: 1,4 Nm (12 lbf in)
- Borne à vis de compression
  - Virole à sertir recommandée
  - Câblage d'entrée/sortie
    - Isolation: 300 V min
    - Taille: 14 à 18 AWG
    - Type de fil: cuivre
  - Couple de serrage des vis de compression
    - Minimum: 0,6 Nm (5 lbf in)
    - Maximum: 0,8 Nm (7 lbf in)
  - Couple de serrage des oreilles de montage
    - Minimum: 0,18 Nm (1,6 lbf in)
    - Maximum: 0,25 Nm (2,2 lbf in)
- Vis de mise à la terre
  - Borne à anneau n° 6 recommandée
  - Câblage de mise à la terre
    - Isolation: 300 V min
    - Taille: 14 AWG, longueur < 3 m
    - Type de fil: cuivre
  - Couple de serrage
    - Minimum: 0,9 Nm (8 lbf in)
    - Maximum: 1,4 Nm (12 lbf in)

Table 2 Other Safety Marks

⚠ **DANGER** Disconnect or de-energize all external connections before opening this device. Contact with hazardous voltages and currents inside this device can cause electrical shock resulting in injury or death.	⚠ **DANGER** Débrancher tous les raccordements externes avant d'ouvrir cet appareil. Tout contact avec des tensions ou courants internes à l'appareil peut causer un choc électrique pouvant entraîner des blessures ou la mort.
⚠ **DANGER** Contact with instrument terminals can cause electrical shock that can result in injury or death.	⚠ **DANGER** Tout contact avec les bornes de l'appareil peut causer un choc électrique pouvant entraîner des blessures ou la mort.
⚠ **DANGER** Safety insulation is not provided between contact I/O terminals. If hazardous live voltage is attached to one terminal, all contact output terminals must be treated as hazardous live. Failing to do so can cause electrical shock that can result in injury or death.	⚠ **DANGER** L'isolation de sécurité n'est pas fournie entre les bornes de sortie. Si une borne est sous tension dangereuse, toutes les bornes de sortie doivent être considérées comme étant sous tension dangereuse. Le non-respect de ces consignes peut provoquer un choc électrique pouvant entraîner des blessures ou la mort.
⚠ **WARNING** Stranded wire presents a risk of exposing the user to contact with hazardous voltages if not all the strands are captured in the terminals. Use crimp ferrules to safely capture all wire strands.	⚠ **AVERTISSEMENT** Le fil toronné présente un risque d'exposer l'utilisateur à des tensions dangereuses si tous les torons ne sont pas capturés dans les bornes. Utiliser des ferrules à sertir pour capturer en toute sécurité tous les brins de fil.

⚠ WARNING Segregation between Class 1 (field, factory wiring, terminal, and uninsulated live parts) and Class 2 and Class 3 (wiring and uninsulated live parts) must be provided in the installation. Segregate by 1) using any combination of clamping, routing, or equivalent wire management method with a minimum of 6.0 mm of separation, 2) using insulation rated for the highest voltage on both wires and cables, or 3) adding an additional sleeving rated for the highest voltage on the Class 2 or Class 3 wiring (completely covering the wiring, end to end). Wiring class is defined per NFPA 70.	**⚠ AVERTISSEMENT** La ségrégation entre la classe 1 (sur site, câblage d'usine, borne et pièces sous tension non isolées) et les classes 2 et 3 (câblage et pièces sous tension non isolées) doit être fournie avec l'installation. Séparer par 1) en utilisant toute combinaison de méthode de serrage, d'acheminement ou de gestion des câbles équivalente avec un minimum de 6,0 mm de séparation, 2) en utilisant une isolation évaluée pour la tension la plus élevée sur les fils et les câbles, ou 3) en ajoutant une gaine supplémentaire évaluée pour la tension la plus élevée sur le câblage de classe 2 ou de classe 3 (couvrant complètement le câblage, bout à bout). La classe de câblage est définie par NFPA 70.
⚠ WARNING Always use an overcurrent protection device such as a circuit breaker or fuse. The contact output must operate on the load side of the overcurrent protection device. The type and size of the overcurrent protection device must be appropriate for the connected load and wiring.	**⚠ AVERTISSEMENT** Utiliser toujours un dispositif de protection contre les surintensités tel qu'un disjoncteur ou un fusible. La sortie doit fonctionner du côté de la charge du dispositif de protection contre les surintensités. Le type et la taille du dispositif de protection contre les surintensités doivent être adaptés à la charge et au câblage connectés.
⚠ WARNING The voltage across any of the contact output terminals must not exceed the rated operational voltage.	**⚠ AVERTISSEMENT** La tension de n'importe quelle borne de sortie ne doit pas dépasser la tension de fonctionnement nominale.
⚠ WARNING Use of this equipment in a manner other than specified in this manual can impair operator safety safeguards provided by this equipment.	**⚠ AVERTISSEMENT** L'utilisation de cet appareil suivant des procédures différentes de celles indiquées dans ce manuel peut désarmer les dispositifs de protection d'opérateur normalement actifs sur cet équipement.
⚠ WARNING Have only qualified personnel service this equipment. If you are not qualified to service this equipment, you can injure yourself or others, or cause equipment damage.	**⚠ AVERTISSEMENT** Seules des personnes qualifiées peuvent travailler sur cet appareil. Si vous n'êtes pas qualifiés pour ce travail, vous pourriez vous blesser avec d'autres personnes ou endommager l'équipement.
⚠ WARNING Do not operate device unless properly grounded.	**⚠ AVERTISSEMENT** Ne pas mettre en marche l'appareil sauf s'il est bien mis à la terre.
⚠ WARNING Failure to ensure proper voltage levels can cause equipment damage.	**⚠ AVERTISSEMENT** L' application de niveaux de tension inadéquats peut causer des dommages à l'équipement.
⚠ WARNING Faulty USB peripheral devices that draw excessive current may become very hot and cause severe burns if touched.	**⚠ AVERTISSEMENT** Les périphériques USB défectueux qui consomment trop de courant peuvent devenir très chauds et causer de graves brûlures de peau.

⚠ WARNING	⚠ AVERTISSEMENT
Contact I/O terminals are considered hazardous at any voltage level. External equipment connected to contact I/O terminals must provide electrical isolation that meets or exceeds the maximum rated contact I/O voltage specified in Specifications on page 11.	Les terminaisons d'E/S de contact sont considérés comme dangereux à n'importe quel niveau de tension. L'équipement externe connecté aux terminaisons d'E/S de contact doit fournir une isolation électrique qui respecte ou dépasse la tension nominale maximale décrite dans les Spécifications.
⚠ CAUTION	⚠ ATTENTION
Equipment components are sensitive to electrostatic discharge (ESD). Undetectable permanent damage can result if you do not use proper ESD procedures. Ground yourself, your work surface, and this equipment before removing any cover from this equipment. If your facility is not equipped to work with these components, contact SEL about returning this device and related SEL equipment for service.	Les composants de cet équipement sont sensibles aux décharges électrostatiques (DES). Des dommages permanents non-décelables peuvent résulter de l'absence de précautions contre les DES. Raccordez-vous correctement à la terre, ainsi que la surface de travail et l'appareil avant d'en retirer un panneau. Si vous n'êtes pas équipés pour travailler avec ce type de composants, contacter SEL afin de retourner l'appareil pour un service en usine.

General Information

Technical Support

We appreciate your interest in SEL products and services. If you have questions or comments, please contact us at:

Schweitzer Engineering Laboratories, Inc.
2350 NE Hopkins Court
Pullman, WA 99163-5603 U.S.A.
Tel: +1.509.338.3838
Fax: +1.509.332.7990
Internet: selinc.com/support
Email: info@selinc.com

SECTION 1

Introduction and Specifications

Overview

The SEL-3350 provides a powerful and flexible platform that you can configure as a Real-Time Automation Controller (RTAC), a Blueframe application platform, or a Microsoft Windows or Linux based solution. The rugged hardware of the SEL-3350 enables you to deploy fully customized automation and computing solutions into industrial environments that are not suitable for general purpose computers.

This instruction manual covers the hardware and firmware of the SEL-3350. For instructions on the various operating systems and software, refer to literature on the associated manufacturer's website.

Features

The SEL-3350 is a rugged, easy-to-use automation controller designed for substation, industrial, or other harsh environments. The following features are included in the system:

x86-64 Architecture. The Intel Atom microprocessor architecture delivers high performance and broad operating system and software compatibility. Four processor cores and 8 GB of RAM enable running multiple time-critical applications simultaneously.

Operating System Choices. You can purchase the SEL-3350 with or without one of the optional operating systems, like SEL RTAC, SEL Blueframe, or Microsoft Windows, to add flexibility, functionality, and security.

Form Factor. The 19-inch rack-mount chassis is designed for substation and industrial control applications. The system includes I/O connections for linking to networks, peripherals, storage, video, alarm, and serial I/O—all with protection against electrical shock and surge.

Power Supply. A selection of ac/dc power supplies provides compatibility with a variety of power sources. The 1U chassis has a single built-in power supply while the 3U chassis supports two replaceable power supply modules for redundant power sources.

Mass Storage. The SEL-3350 contains two 2.5-inch SATA drive slots that support field-servicing. High-performance, industrial-rated, solid-state drives (SSD) are available as ordering options.

Display Interface. A single DisplayPort interface enables connecting to as many as three independent high-definition displays simultaneously via DisplayPort Multi-Stream Transport (MST). Digital audio can be streamed through the DisplayPort interface for simple integration and high-definition surround-sound.

USB Connectivity. Front- and rear-panel USB ports provide connections to keyboards, mice, and many other USB peripherals. Each port has a current-limiting function to protect the system from external short circuits while still supporting high-power USB devices.

Ethernet. Five Ethernet ports provide high-speed network connectivity through five independent Ethernet controllers, enabling connections to independent networks or redundant paired network connections. The front Ethernet port provides quick and secure engineering access without connecting to the local network. Select from RJ45 copper and small form-factor pluggable (SFP) fiber-optic interfaces for the rear ports.

Serial I/O. With 16 EIA-232/422/485 serial ports standard and optional expansion to 48 ports (3U chassis only), the SEL-3350 can communicate with many electronic devices such as automation controllers, protective relays, communications radios, and modems. Each port provides IRIG-B time distribution to the connected devices.

IRIG-B Input/Output. Synchronize the system time to a satellite clock by using the high-precision IRIG-B input. Distribute IRIG-B to downstream devices by using the IRIG-B output and serial ports.

Contact Inputs. The SEL-3350 includes one universal contact input (IN101) and supports an optional contact I/O board (3U chassis only) that provides 24 additional contact inputs. These configurable wide-range inputs can be used to monitor status changes in switches and contact outputs. The universal contact input can also be used to measure actual voltage for applications like battery monitoring.

Contact Outputs. The SEL-3350 includes one Form C contact output (OUT101) and supports an optional contact I/O board (3U chassis only) that provides eight additional Form A contact outputs. The OUT101 output is normally controlled by the SEL-3350 system alarm to notify external devices when the SEL-3350 is experiencing abnormal operating conditions. Reconfigure the OUT101 contact to control it with automation logic.

Watchdog. If a system lockup is detected, the watchdog can trigger a system reboot in order to attempt to return to a normal operating state.

Remote Management. The SEL-3350 supports remote access over Ethernet.

Models and Options

Models

The SEL-3350 is available in both a slim 1U form factor and an expanded 3U form factor, which provides additional I/O capabilities. This instruction manual provides an overview of the SEL-3350 model options. You can find the latest options and features at selinc.com.

Options

The SEL-3350 has the following options and features:

- Operating System

  Order with no operating system or choose one of the following options:
  - SEL Real-Time Automation Controller (RTAC)
  - SEL Blueframe with optional SEL applications
  - Microsoft Windows 10 with optional software applications
  - Microsoft Windows Server with optional software applications
- Conformal Coating
  - Conformally coated circuit boards
- Chassis and Mounting
  - Horizontal 1U 19-inch rack
  - Horizontal 3U 19-inch rack
  - Horizontal 1U panel
  - Horizontal 3U panel
- Power Supply
  - 24–48 Vdc
  - 48–125 Vdc or 110–120 Vac
  - 125–250 Vdc or 120–240 Vac
  - Dual hot-swappable power supplies (optional, 3U chassis only)
- Rear Ethernet Port Configurations
  - 4 RJ45 copper ports (10/100/1000 Mbps)
  - 4 SFP fiber-optic ports (supports 100 and 1000 Mbps modules)
  - 2 RJ45 copper ports and 2 SFP fiber-optic ports
  - Optional SFP fiber-optic modules
- SATA Drives

  Select as many as two SATA drives
  - Industrial-grade single-level cell (SLC) drives: 32 to 256 GB, 10-year warranty
  - Industrial-grade pseudo-SLC (pSLC) drives: 120 to 480 GB, 5-year warranty
  - Industrial-grade 3D triple-level cell (3D TLC) drives: 240 to 7680 GB, 5-year warranty
  - Consumer-grade multi-level cell (MLC) drives: 240 GB to 1920 GB, 3-year warranty, reduced operating temperature rating
- Software
  - Software applications from SEL and third parties
  - Available options depend on operating system choice

- Serial Ports
  - 16 EIA-232/422/485 RJ45 ports (standard)
  - 48 EIA-232/422/485 RJ45 ports (optional, 3U chassis only)
- Contact I/O
  - 1 universal input and 1 alarm/contact output (standard)
  - 1 universal input and 1 alarm/contact output plus 24 input/8 output expansion board (optional, 3U chassis only)

Applications

The SEL-3350 is an extremely versatile and powerful automation controller that may be used for many applications. You can customize the SEL-3350 with factory-installed options and/or third-party software to meet the requirements of your application. Several of the most popular applications are listed in *Table 1.1* and shown later in this section.

Table 1.1 Popular Applications

Application	Description
Intelligent Port switch	Connects a single serial port to multiple serial ports.
Network Gateway	Port server network gateway connects a single network port to multiple serial ports.
Protocol Gateway	Connects multiple systems that use different protocols.
Time-Synchronization Source	Selects the best time from different sources and provides either or both IRIG-B and Network Time Protocol (NTP) outputs to connected devices.
Synchrophasor Processor	Connects phasor measurement unit (PMU) data to other devices and processes through protocol conversion.
SCADA Data Concentrator (Remote Terminal Unit (RTU)/Programmable Logic Controller (PLC))	Monitors digital and analog inputs to transmit to a central location with standard SCADA protocols.
Security Gateway	Provides firewall protection to incoming Ethernet communication as well as encryption for individual Ethernet sessions.
Logic Processor (Automation)	Monitors digital and analog inputs to transmit to a central location plus performs IEC 61131-3 logic.
Local or Remote HMI	Provides visualization and control via on-board video output ports and through remote web browser access.

Intelligent Port Switch

The flexible communications parameters of the SEL RTAC operating system available on the SEL-3350 make it a great choice for almost any port switching application. Although RTAC multitasking/multiuser and data handling capabilities make the SEL-3350 a very powerful remote automation controller, it is still an economical choice for port switching applications. The time-synchronization capabilities of the SEL-3350 add to its value in this application. An example of this application is shown in *Figure 1.1*.

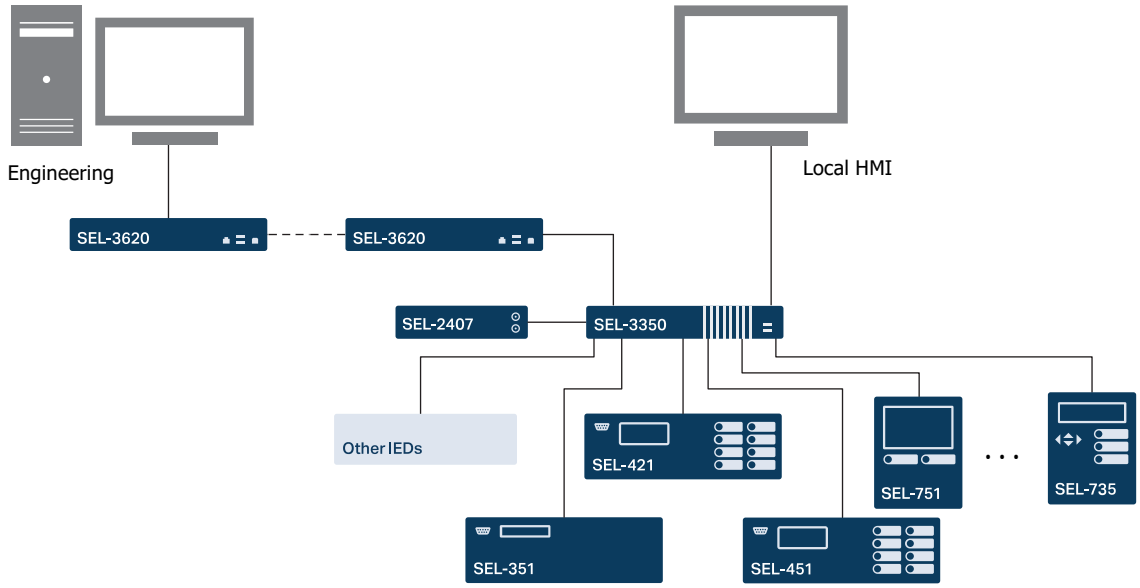

Figure 1.1 Engineering Communication Through a Serial Access Point

Network Gateway

The SEL-3350 comes standard with four rear Ethernet ports that you can configure to make serial-connected devices available to high-speed networks. The optional SEL RTAC operating system supports virtual terminal connections through the Ethernet ports. For example, Ethernet users can establish secure Telnet sessions and communicate with an intelligent electronic device (IED) connected to the SEL-3350 with the SEL RTAC operating system. An example of this application is shown in *Figure 1.2*.

The SEL-3350 comes standard with four rear Ethernet ports that you can configure to make serial-connected devices available to high-speed networks, as shown in *Figure 1.2*.

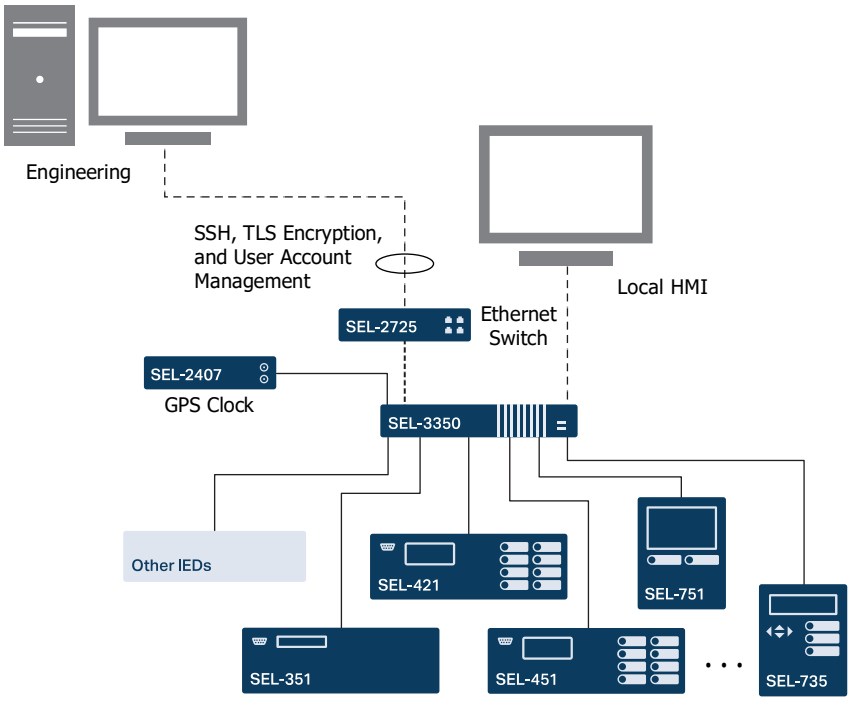

Figure 1.2 Engineering Communication Through a Network Access Point

Protocol Gateway

Collect downstream data with client protocols and send these data to your upstream HMI, RTU, or SCADA master with server protocols, converting the data from one protocol to another in the process. The SEL-3350 is great for data concentration when combined with the optional SEL RTAC operating system that provides multitasking/multiuser and data handling capabilities. An example of this application is shown in *Figure 1.3*.

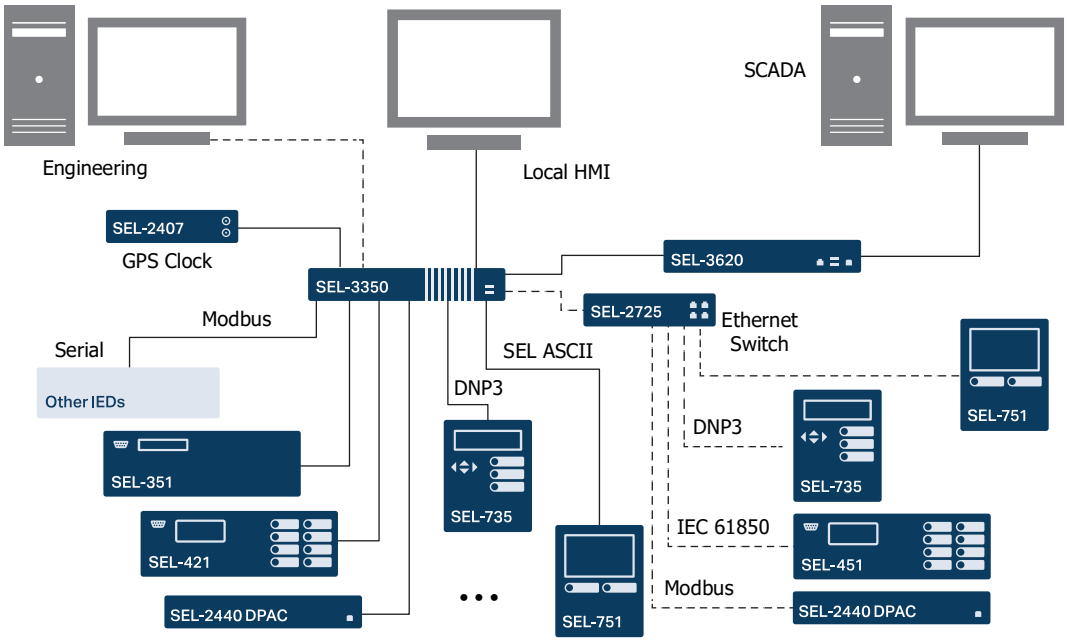

Figure 1.3 Protocol Conversion

Time-Synchronization Source

Synchronize the time clocks in attached devices that accept a demodulated IRIG-B time signal. The demodulated IRIG-B signal is regenerated in the SEL-3350 from an external modulated or demodulated source, such as a GPS satellite clock receiver or other serial or Ethernet communications. If an external clock source is not available, the SEL-3350 generates an IRIG-B signal from its internal clock, allowing device synchronization to a common clock for improved sequence-of-events analysis. An example of this application is shown in *Figure 1.4*. The system time may also be set on the SEL-3350 from a Simple Network Time Protocol (SNTP) source, a Network Time Protocol (NTP) source, or a Precision Time Protocol (PTP) source.

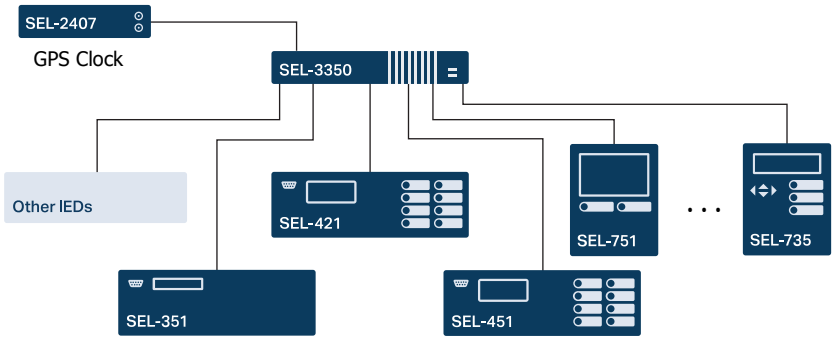

Figure 1.4 Distribute Time With Serial Communications Cable

Synchrophasor Processor

Move synchrophasor data to SCADA operations centers by using standard protocols, such as DNP3. Include time stamps and time quality in the SCADA message to allow for system-wide use of synchrophasor data. With the logic engine in the optional SEL RTAC operating system, you can perform complex math and logic calculations on synchrophasor data collected from SEL relays and other IEEE C37.118-compliant devices. An example of this application is shown in *Figure 1.5*.

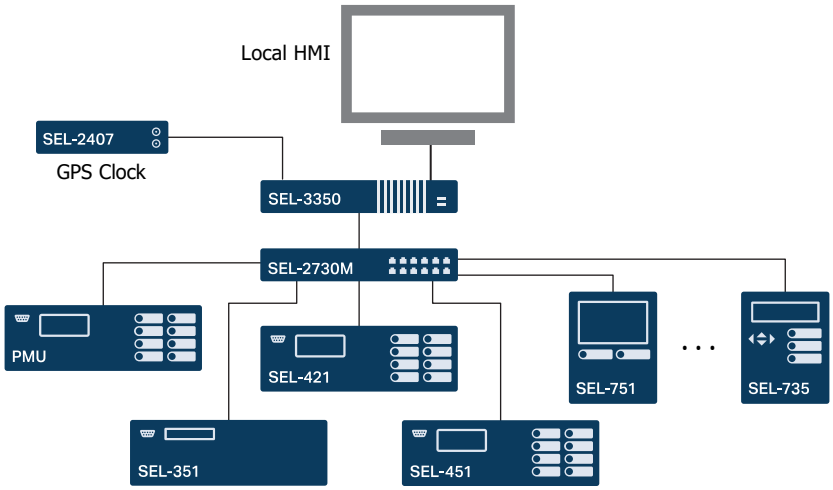

Figure 1.5 System Control and Synchrophasor Data Concentration

SCADA Data Concentrator

Use the SEL-3350 with your protective relays and other IEDs as the substation SCADA data concentrator (RTU/PLC). You can configure the SEL-3350 with SEL RTAC operating system to collect and view station-wide sequential events recorder (SER) records and event reports. Retrieve asset optimization data from SEL IEDs or other IEDs to maintain system reliability. Access the remote SEL-3350 through the Ethernet connection to manage users, view diagnostics, and access logs. Establish a remote connection with any IED connected to the SEL-3350 through engineering access communications channels. Use the SEL Fast Message protocol to maintain SCADA control and metering updates throughout the engineering access connection. Remotely manage protection and control settings in connected relays by using SEL Grid Configurator SEL-5037 Software. An example of this application is shown in *Figure 1.6*.

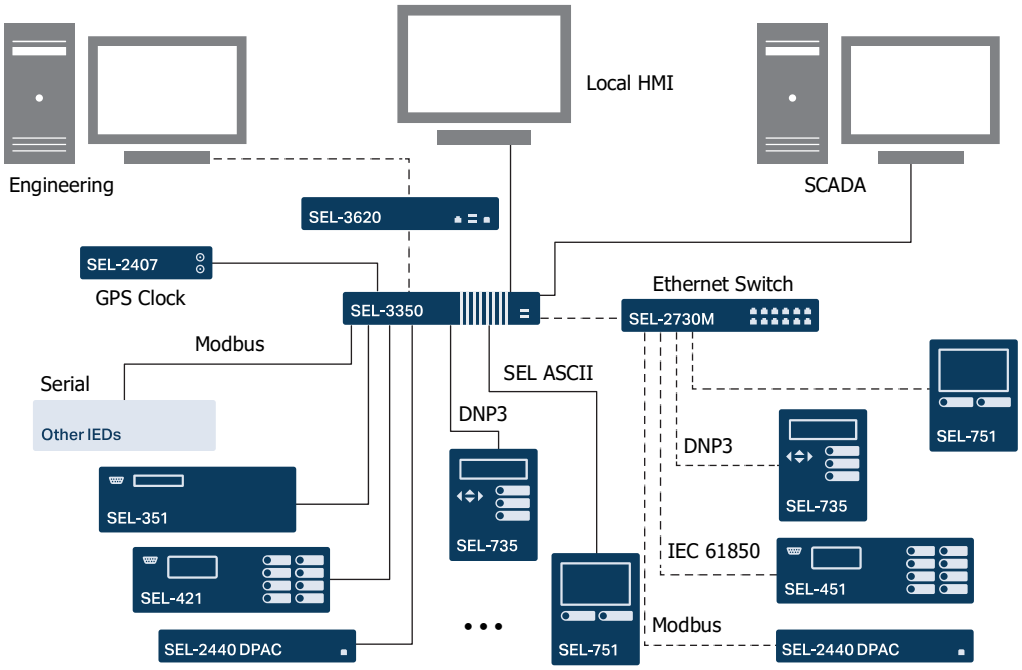

Figure 1.6 SCADA Communication Through a Single Access Point

Security Gateway

Combine the SEL-3350 with a secure operating system like the SEL RTAC operating system and third-party application software that can provide secure engineering access and other Ethernet tunneled serial communications on the automation network with Secure Sockets Layer (SSL)/Transport Layer Security (TLS) or Secure Shell (SSH) encryption. Implement system security auditing, logging, and password restrictions to enforce NERC standards. Comply with role-based requirements by implementing per-user security profiles. Optionally incorporate serial and wireless encrypting devices to further secure communication to any device. An example of this application is shown in *Figure 1.7*.

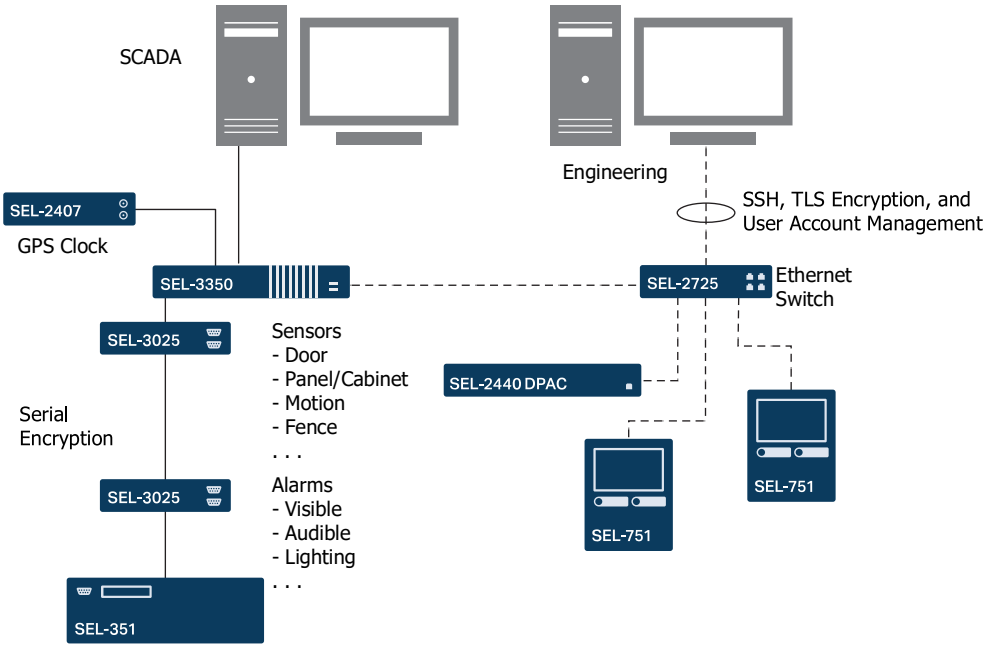

Figure 1.7 Security Through a Single Access Point

Logic Processor (Automation)

Combine the SEL-3350 with the powerful logic engine of the SEL RTAC operating system to automate existing installations with modern IEC 61131 applications. Ensure compatibility with any SEL device through the MIRRORED BITS protocol. Take advantage of multiprotocol support to collect SCADA information, process control commands, and SNTP/NTP time synchronization through a single communications link to each Ethernet device. Scale values and calculate logic in a familiar IEC 61131 configuration environment. The SEL RTAC operating system provides secure, encrypted communication to any device on the substation network or serial channel. An example of this application is shown in *Figure 1.8*.

Combine the SEL-3350 with third-party applications that have a logic engine in order to automate existing installations with modern IEC 61131 applications. Take advantage of multiprotocol support to collect SCADA information, process control commands, and SNTP/NTP time synchronization through a single communications link to each Ethernet device. Scale values and calculate logic in a familiar IEC 61131 configuration environment. An example of this application is shown in *Figure 1.8*.

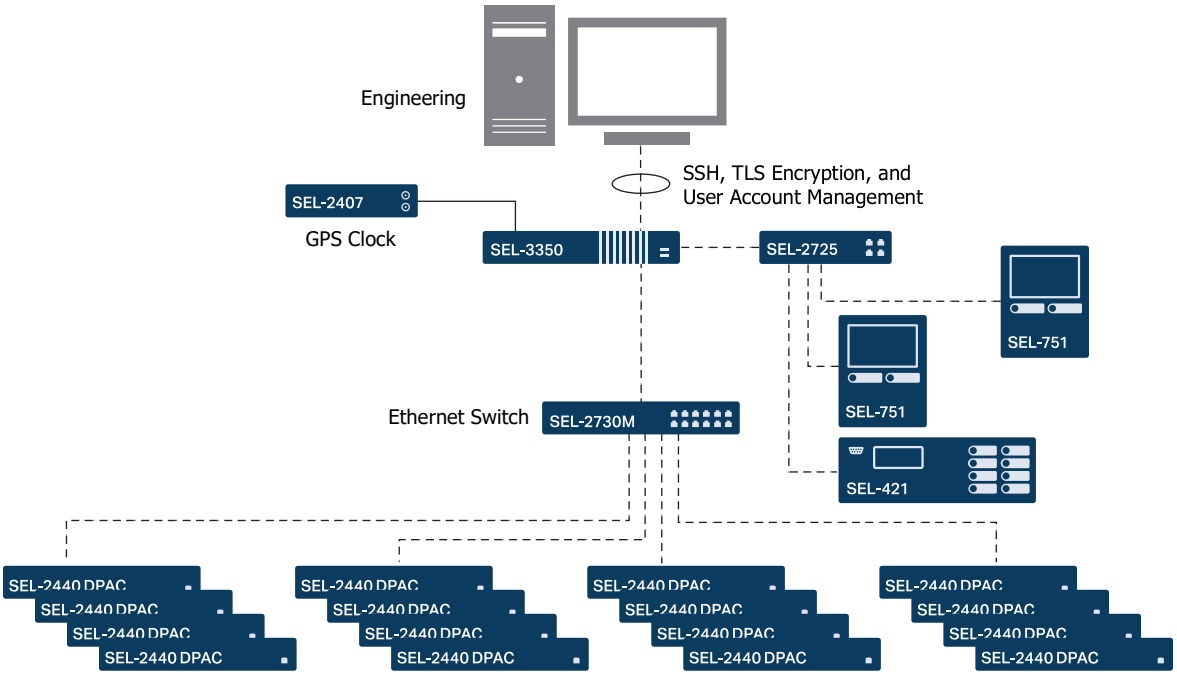

Figure 1.8 Automate and Integrate With Communication and Logic

Specifications

Compliance

Designed and manufactured under an ISO 9001 certified quality management system

47 CFR 15B Class A

This equipment has been tested and found to comply with the limits for a Class A digital device, pursuant to part 15 of the FCC Rules. These limits are designed to provide reasonable protection against harmful interference when the equipment is operated in a commercial environment. This equipment generates, uses, and can radiate radio frequency energy and, if not installed and used in accordance with the instruction manual, may cause harmful interference in which case the user will be required to correct the interference at his own expense.

UL Listed to U.S. and Canadian safety standards (File E220228; NRAQ)

CE Mark

UKCA Mark

RCM Mark

RoHS Compliant

General

SEL Operating Systems

SEL Real-Time Automation Controller (RTAC)

SEL Blueframe

Supported Third-Party Operating Systems

Microsoft Windows 10*
Microsoft Windows Server 2019/2022*
Red Hat Enterprise Linux** 7/8/9
Ubuntu Linux** 16.04/18.04/20.04/22.04 LTS
OpenSUSE: 15
SUSE Enterprise Linux: 15
* Factory-installed option
** Derivatives with same kernel versions also supported

CPU

Intel Atom x5-E3940

Cores/Threads:	4/4
Frequency:	1.6 GHz
Cache:	2 MB L2

RAM

8 GB ECC DDR3L-1600 (PC3-12800)

Mass Storage

Supports two 2.5-inch SATA Drives
SATA III 6.0 Gbps

Optional SATA Drives:	Industrial-Grade SLC SSD, 32–256 GB, 10-year warranty Industrial-Grade pSLC SSD, 120–480 GB, 5-year warranty Industrial-Grade 3D TLC SSD, 240–7680 GB, 5-year warranty Consumer-Grade MLC SSD*, 240–1920 GB, 3-year warranty

*No longer orderable as a factory-installed option.

BIOS

AMI UEFI

Real-Time Clock/Calendar

Battery Type:	IEC No. BR-2330A Lithium
Battery Life:	10 years with power 2 years without power
Drift:	200 ppm

Trusted Platform Module

Infineon SLM 9670AQ TPM 2.0

Network Time Protocol (NTP) Modes

NTP Client:	As many as three configurable servers

NTP Server

Simple Network Time Protocol (SNTP) Accuracy

±1 ms:	This does not take into account external factors such as network switches and topologies.

Precise Time Protocol (PTP)

PTP Client:	Peer delay request and end-to-end path delay supported

Operating Environment

Operating Temperature Range:	–40° to +85°C (–40° to +185°F)*

* Requires Industrial-Grade SSDs. See SEL Application Note, "Determining Solid-State Drive (SSD) Lifetimes for SEL Computing Platforms" (AN2016-03).

Note: UL maximum ambient 40°C. See the instruction manual safety information for additional restrictions.

Storage Temperature Range: –40° to +85°C (–40° to +185°F)

Relative Humidity: 5%–95% noncondensing

Insulation Class: 1

Pollution Degree 2

Overvoltage Category:

Category	Maximum Altitude	Atmospheric Pressure
Category II	5,000 m	54–110 kPa

Weight

1U Chassis: 2.72 kg (6 lb) maximum

3U Chassis: 7.26 kg (16 lb) maximum

Peripheral Connections

Video and Audio

Intel HD Graphics 500 Controller

DisplayPort 1.2 output

Up to three displays via DisplayPort MST

Intel Display Audio digital audio output

Maximum resolution*: 4096 x 2160 @ 60 Hz, one display
1920 x 1200 @ 60 Hz, three displays

Cable length <7.5 m for Surge Immunity compliance

*High-resolution displays require high-quality cables. Ensure your display cables are as short as possible and rated for the required screen resolution.

USB

2 front-panel ports, USB 3.2 Gen 1 (SuperSpeed USB 5 Gbps)
4 rear-panel ports, USB 2.0 (High-Speed USB 480 Mbps)
1 internal Type-A port, USB 2.0 (High-Speed USB 480 Mbps)
1,500 mA maximum combined current
Cable length <2 m for Electromagnetic Compatibility Immunity compliance

Communications Ports

Ethernet

SEL Gigabit Ethernet controllers

1 front-panel 10/100/1000 Mbps port, RJ45

4 rear-panel 10/100/1000 Mbps ports

Configurations: 4 RJ45 copper ports
4 SFP fiber-optic ports
2 RJ45 and 2 SFP fiber-optic ports

Jumbo Frame MTU: 9000 bytes (Linux only)

See *Surge Immunity* for cable length restrictions.

Serial

SEL multiport serial controller

EIA-232/422/485 Ports:	16 ports standard; 48 ports optional RJ45 connectors 300–115,200 bps 256 byte TX and RX FIFOs each port +5 Vdc port power COM 1–16: 0.5 A, 2.5 W, total COM 17–48: 1.0 A, 5 W, total IRIG-B output

See *Surge Immunity* for cable length restrictions.

Time Code Inputs and Outputs

Time Code Inputs

One BNC IRIG-B Input

Format:	IRIG-B002 or -B004 (demodulated)
On (1) State:	$V_{ih} \geq 2.2$ V
Off (0) State:	$V_{il} \leq 0.8$ V
Nominal Input Impedance:	3.3 kΩ

Note: IRIG-B004 control bits comply with IEEE C37.118.1-2011 (reverse compatible with IRIG-B000 and IEEE C37.118-2005).

Time Code Outputs

One BNC IRIG-B Output, All RJ45 Serial Ports

Format:	IRIG-B004 (demodulated)
On (1) State:	$V_{oh} \geq 2.4$ V
Off (0) State:	$V_{ol} \leq 0.8$ V

Output Drive Capacity

BNC IRIG-B Out:	TTL 240 mA (>20 Ω)
Each Serial Port:	TTL 6 mA (>400 Ω)

Note: IRIG-B004 control bits comply with IEEE C37.118.1-2011 (reverse compatible with IRIG-B000 and IEEE C37.118-2005).

Contact Inputs and Outputs

Universal Contact Input IN101 (Bipolar Operation)

Rated Voltage Range:	24–250 Vdc, 24–240 Vac, 50/60 Hz
Operational Voltage Range:	0–300 Vdc, 0–264 Vac, 45–65 Hz
DC Measurement Accuracy*:	±0.5%, ±250 mV
AC Measurement Accuracy*:	±2.5%, ±500 mV
RMS Filter Period:	1 s
Pickup/Dropout Level Setting Range:	15–265 Vdc/Vac rms
Pickup/Dropout Delay Setting Range:	0–4,000 ms**
Continuous Current Draw:	1.0–4.0 mA @ > 24 Vdc/Vac
Initial Current Draw:	<50 mA for <8 ms

* Intended as a measurement function only.
** Type tested with delay settings of 8 ms at <48 V and 2 ms at ≥48 V.

Standard Contact Inputs IN201–IN224 (Bipolar Operation)

Input Type: IN201–IN203, IN213–IN215 electrically isolated, dedicated returns
IN204–IN212, IN216–IN224 electrically isolated, common returns

Rated Voltage Range: 24–250 Vdc, 24–240 Vac, 50/60 Hz

Operational Voltage Range: 0–300 Vdc, 0–264 Vac, 45–65 Hz

Pickup/Dropout Level:

Nominal Voltage Setting	Dropout Voltage	Pickup Voltage
24 Vdc	0.0–14.4 Vdc	19.2–30.0 Vdc
48 Vdc	0.0–28.8 Vdc	38.4–60.0 Vdc
110 Vdc	0.0–66.0 Vdc	88.0–132.0 Vdc
125 Vdc	0.0–75.0 Vdc	105.0–150.0 Vdc
220 Vdc	0.0–132.0 Vdc	176.0–264.0 Vdc
250 Vdc	0.0–150.0 Vdc	200.0–300.0 Vdc
24 Vac	0.0–10.1 Vac	16.4–30.0 Vac
48 Vac	0.0–20.3 Vac	32.8–60.0 Vac
110 Vac	0.0–46.6 Vac	75.1–132.0 Vac
120 Vac	0.0–53.0 Vac	89.6–150.0 Vac
220 Vac	0.0–93.2 Vac	150.3–264.0 Vac
240 Vac	0.0–106.0 Vac	170.6–264.0 Vac

Pickup/Dropout Delay Setting Range: 2–4000 ms @ >24 Vdc/Vac
4–4000 ms @ 24 Vdc/Vac

Continuous Current Draw: 1.0–4.0 mA

Initial Current Draw: <170 mA for 2 ms @ >24 Vdc/Vac
<170 mA for 4 ms @ 24 Vdc/Vac

Fuse Ratings IN201–IN224 (F1–F24)

Type: 3x10.1 mm Time-Lag T

Current Rating: 0.160 A

Voltage Rating: 250 Vac/Vdc

Breaking Capacity: 20 A @ 250 Vac/Vdc

Note: These fuses are not serviceable.

Standard Contact Outputs OUT101, OUT205–OUT208

Output Type: OUT101/Alarm: Relay Form C Break Before Make
OUT205–OUT208: Relay Form A

Pilot Duty Ratings*: B300 (UL), AC-15 (IEC)
R300 (UL), DC-13 (IEC)

Rated Voltage**: 24–250 Vdc
110–240 Vrms

Note: The voltage across any of the contact output terminals must not exceed the operational voltage.

Operational Voltage**: 0–300 Vdc
0–264 Vrms

Contact Protection: MOV protection across open contacts
264 Vrms continuous voltage
300 Vdc continuous voltage

Continuous Carry**:	6 A @ 70°C, 4 A @ 85°C
Pickup/Dropout Time**:	≤6 ms (resistive load)
Power Supply Burden**:	≤1 W
Mechanical Endurance**:	10,000 no-load operations
Make (Short Duration Contact Current)**:	30 Adc 1000 operations @ 250 Vdc 2,000 operations @ 125 Vdc

Note: 200 ms on, 15 ms off, current interrupted by independent means.

Short-Time Thermal Withstand**:	50 A for 1 s
Limiting Making Capacity**:	1,000 W @ 250 Vdc (L/R = 40 ms)
Limiting Breaking Capacity/Electrical Endurance**:	10,000 operations 10 operations in 4 s, followed by 2 min idle

Rated Voltage	Resistive Break	Inductive Break L/R = 40 ms (DC) PF = 0.4 (AC)
24 Vdc	1.25 Adc	1.25 Adc
48 Vdc	0.63 Adc	0.63 Adc
125 Vdc	0.30 Adc	0.30 Adc
250 Vdc	0.20 Adc	0.20 Adc
110 Vrms	0.30 Arms	0.30 Arms
240 Vrms	0.20 Arms	0.20 Arms

* Per UL 508 and IEC 60947-5-1 for IEC 61010-2-201 compliance.
** Parameters verified by SEL per IEC 60255-1:2009 and IEEE C37.90-2005.

Fast Hybrid Contact Outputs OUT201–OUT204

Output Type:	OUT201–OUT204; Fast Hybrid, Form A
Pilot Duty Ratings*:	B300 (UL), AC-15 (IEC) R300 (UL), DC-13 (IEC)
Rated Voltage**:	24–250 Vdc

Note: The voltage across any of the contact output terminals must not exceed the operational voltage.

Operational Voltage:	0–300 Vdc
Contact Protection:	MOV protection across open contacts 300 Vdc continuous voltage
Continuous Carry**:	6 Adc @ 70°C, 4 Adc @ 85°C
Pickup Time**:	≤ 50 µs (resistive load)
Dropout Time**:	≤ 8 ms (resistive load)
Power Supply Burden**:	<1 W
Mechanical Endurance**:	10,000 no-load operations
Make (Short Duration Contact Current)**:	30 Adc 1,000 operations @ 250 Vdc 2,000 operations @ 125 Vdc

Note: 200 ms on, 15 ms off, current interrupted by independent means.

Short-Time Thermal Withstand**:	50 Adc for 1 s
Limiting Making Capacity**:	1,000 W @ 250 Vdc (L/R = 40 ms)
Limiting Breaking Capacity/Electrical Endurance**:	10,000 operations 4 operations in 1 s, followed by 2 min idle

* Per UL 508 and IEC 60947-5-1 for IEC 61010-2-201 compliance.

** Parameters verified by SEL per IEC 60255-1:2009 and IEEE C37.90-2005.

Rated Voltage	Resistive Break	Inductive Break
24 Vdc	10 Adc	10 Adc (L/R = 40 ms)
48 Vdc	10 Adc	10 Adc (L/R = 40 ms)
125 Vdc	10 Adc	10 Adc (L/R = 40 ms)
250 Vdc	10 Adc	10 Adc (L/R = 20 ms)

Power Supplies

General

Typical Burden*:	20 W, 45 VA (pf = 0.4)
Maximum Burden*:	62 W, 150 VA (pf = 0.4)
DC Ripple:	15% per IEC 60255-26:2013
Input Isolated From Chassis Ground:	Yes

*See *Table 1.2* for additional burden information.

Low Voltage 24–48 Vdc

Voltage Rating:	24–48 Vdc
Voltage Range:	18–60 Vdc
Interruption*:	50 ms @ 24 Vdc, 300 ms @ 48 Vdc
Peak Inrush:	5.4 A for 57 ms @ 24 Vdc 10.9 A for 77 ms @ 48 Vdc

Medium Voltage 48–125 Vdc or 110–120 Vac

Voltage Rating:	48–125 Vdc, 110–120 Vac
Operational Voltage Range:	38–140 Vdc, 85–140 Vac
Frequency Rating:	50/60 Hz
Operational Frequency Range:	30–120 Hz
Interruption*:	50 ms @ 48 Vdc, 500 ms @ 125 Vdc/110 Vac
Peak Inrush:	2.9 A for 50 ms @ 48 Vdc 8.0 A for 59 ms @ 125 Vdc 10.0 A for 62 ms @ 110 Vac (156 Vdc) 10.9 A for 63 ms @ 120 Vac (170 Vdc)

High Voltage 125–250 Vdc or 110–240 Vac

Voltage Rating:	125–250 Vdc, 110–240 Vac
Operational Voltage Range:	85–300 Vdc, 85–264 Vac
Frequency Rating:	50/60 Hz
Operational Frequency Range:	30–120 Hz
Interruption*:	100 ms @ 125 Vdc/110 Vac 500 ms @ 250 Vdc/220 Vac
Peak Inrush:	5.4 A for 36 ms @ 125 Vdc 10.9 A for 49 ms @ 250 Vdc 6.7 A for 45 ms @ 110 Vac (156 Vdc) 14.6 A for 53 ms @ 240 Vac (339 Vdc)

* Tested per IEC 60255-26:2013 with a typical workload.

Recommended External Overcurrent Protection

Breaker Type:	Standard
Breaker Rating:	20 A @ 250 Vdc
Current Breaking Capacity:	10 kA
Grounded Neutral Systems:	Device in series with the energized conductor
DC and Isolated Systems:	Device in series with both conductors

Fuse Ratings

Low-Voltage Power Supply F1

Type:	5x20 mm Time-Lag T
Current Rating:	5.0 A
Voltage Rating:	150 Vdc
Breaking Capacity:	1,500 A @ 150 Vdc

Medium-Voltage Power Supply F1

Type:	5x20 mm Time-Lag T
Current Rating:	3.15 A
Voltage Rating:	250 Vac, 300 Vdc
Breaking Capacity:	1,500 A @ 250 Vac, 300 Vdc

High-Voltage Power Supply F1

Type:	5x20 mm Time-Lag T
Current Rating:	3.15 A
Voltage Rating:	250 Vac, 300 Vdc
Breaking Capacity:	1,500 A @ 250 Vac, 300 Vdc

Terminal Connections

Ring Lug Screw Terminal

#8 Ring Terminal Recommended

Power Wiring

Insulation:	300 V min
Size:	14–16 AWG
Wire Type:	Copper

Ring Lug Tightening Torque

Minimum:	1.0 Nm (9 in-lb)
Maximum:	2.0 Nm (18 in-lb)

Mounting Ear Tightening Torque

Minimum:	0.9 Nm (8 in-lb)
Maximum:	1.4 Nm (12 in-lb)

Compression Screw Terminal

Crimp Ferrule Recommended

Input/Output Wiring

Insulation:	300 V min
Size:	14–18 AWG
Wire Type:	Copper

Compression Screw Tightening Torque

Minimum:	0.6 Nm (5 in-lb)
Maximum:	0.8 Nm (7 in-lb)

Mounting Ear Tightening Torque

Minimum:	0.18 Nm (1.6 in-lb)
Maximum:	0.25 Nm (2.2 in-lb)

Grounding Screw

#6 Ring Terminal Recommended

Ground Wiring

Insulation:	300 V min
Size:	14 AWG, length <3 m
Wire Type:	Copper

Tightening Torque

Minimum:	0.9 Nm (8 in-lb)
Maximum:	1.4 Nm (12 in-lb)

Product Standards

Communications Equipment in Utility Substations:	IEC 61850-3:2013 Performance Class 1 IEEE 1613-2009 Performance Class 1

Note: The following exceptions are applicable to the IEC61850-3 acceptance criteria regarding equipment operation during AC power dips and interruptions (refer to IEC 61850-3 subclause 7.5.5, Equipment function, and 7.5.6, Exceptions).

Power Supply	Requirement	Exception
High Voltage 125–250 Vdc or 110–240 Vac	50 cycle voltage interruptions or dips of 60%	Not Applicable
Medium Voltage 48–125 Vdc or 110–120 Vac	50 cycle voltage interruptions or dips of 60%	Not Applicable[a]

[a] Voltage dips or interruptions that are longer than the power supply interruption specification result in a device restart. For critical process applications that require no restarts for power source interruptions or dips longer than 100 ms, equipment is not intended to be directly connected to a public AC low-voltage power supply network. For those applications, an uninterruptable power supply is recommended.

Industrial Environment:	IEC 61000-6-2:2005 IEC 61000-6-4:2006
Electrical Equipment for Measurement, Control, and Laboratory Use:	IEC 61010-1:2010/AMD1:2016/ COR:2019 UL 61010-1:2019, C22.2 No. 61010-1:12 IEC 61010-2-201:2017 UL 61010-2-201:2018, C22.2 No. 61010-2-201:14
Measuring Relays and Protection Equipment:	IEC 60255-1:2009 IEC 60255-26:2013 (Zone A) IEC 60255-27:2013

Note: To meet Zone A performance, cables must meet length requirements listed in *Surge Immunity* and shielding requirements in *Ethernet Ports on page 47* and *Serial Ports on page 49*.

Programmable Controllers:	IEC 61131-2:2007
Electrical Equipment for Measurement, Control, and Laboratory Use:	IEC 61326-1:2012
EMC Immunity for Industrial Environments:	IEC 61000-6-2:2005+AC:2005
EMC Emissions for Industrial Environments:	IEC 61000-6-4:2006+A1:2010

Safety of Laser Products:	EN 60825-1:2014 EN 60825-2:2004+A1:2007+A2:2010
Product Ecology:	EN 63000:2016 RoHS Compliant

Type Tests

Note: To ensure protection-level EMI and EMC performance, type tests were performed using shielded Ethernet and serial cables with the shield grounded at both ends of the cable and using USB and video cables with ferrite chokes. Double-shielded cables are recommended for best EMI and EMC performance and required for protection-level performance on Ethernet ports.

Electromagnetic Compatibility Emissions

Conducted and Radiated Emissions (Class A):	CISPR 11:2009+A1:2010 CISPR 22:2008 IEC 61000-6-4:2006 IEC 61850-3:2013 FCC 15.107:2014 FCC 15.109:2014 47 CFR Part 15.109 47 CFR Part 15.107 Canada ICES-001(A) / NMB-001(A)
Harmonic Current:	IEC 61000-3-2:2014
Voltage Flicker:	IEC 61000-3-3:2013

Electromagnetic Compatibility Immunity

Conducted RF Immunity:	IEC 61000-4-6:2013 Severity Level: 10 Vrms
Electrostatic Discharge Immunity:	IEC 61000-4-2:2008 IEEE C37.90.3-2001 Severity Level: 2, 4, 6, 8 kV contact discharge 2, 4, 8, 15 kV air discharge
Fast Transient/Burst Immunity:	IEC 61000-4-4:2012 Severity Level: 4 kV, 5 kHz on power supply and contact I/O 2 kV, 5 kHz on communications lines

Note: Ports with lengths limited to <2 m (e.g., USB ports) are not evaluated in Fast Transient/Burst.

Power Frequency Immunity on Binary Inputs:	IEC 60255-26:2013 Severity Level: 300 V common mode 150 V differential mode 50/60 Hz
Conducted Common Mode Disturbance:	IEC 61850-3:2013 Severity Level (Power Input Port): 30 V continuous 300 V for 1 s 50/60 Hz
Magnetic Field Immunity:	IEC 61000-4-8:2009 Severity Level: 1,000 A/m for 3 s 100 A/m for 60 s IEC 61000-4-9:2016 Severity Level: 1,000 A/m IEC 61000-4-10:2016 Severity Level: 100 A/m for 2 s at 100 kHz and 1 MHz
Power Supply Immunity:	IEC 61000-4-11:2004 IEC 61000-4-17:1999+A1:2001+A2:2008 IEC 61000-4-29:2000

Radiated Radio Frequency:
IEC 61000-4-3:2006+A1:2007+A2:2010
Severity Level: 10 V/m
IEEE C37.90.2-2004
Severity Level: 20 V/m

Slow Damped Oscillatory Waves:
IEC 61000-4-18:2006+A1:2010
Severity Level:
Power supply and contact I/O
2.5 kV peak common mode
1.0 kV peak differential mode
Communications ports
1.0 kV peak common mode

Surge Withstand Capability:
IEEE C37.90.1-2012
Severity Level:
2.5 kV oscillatory
4 kV fast transient

Note: Ports with lengths limited to <2 m (e.g., USB ports) are not evaluated in Surge Withstand Capability and Slow Damped Oscillatory Waves.

Surge Immunity:
IEC 61000-4-5:2005
Severity Level per IEC 60255-26:2013*:
Zone A:
2 kV line-to-line
4 kV line-to-earth
Zone B:
1 kV line-to-line
2 kV line-to-earth

Surge Immunity Cable Length Requirements:

IEC 60255-26 Port Classification	Ethernet Length Restrictions	Serial Length Restrictions
Zone A Protection	<10 m	<10 m
Zone A Communication	None	<10 m
Zone B Protection	<10 m	<10 m
Zone B Communication	None	None

* Ports or applications with cable lengths limited to <10 m are excluded from the Surge test.

Environmental

Change of Temperature:
IEC 60068-2-14:2009
Severity Level:
5 cycles, 1°C per minute ramp
–40° to +85°C

Cold, Operational:
IEC 60068-2-1:2007
Severity Level: 16 hours at –40°C

Cold, Storage:
IEC 60068-2-1:2007
Severity Level: 16 hours at –40°C

Damp Heat, Cyclic:
IEC 60068-2-30:2005
Severity Level:
12 + 12-hour cycle
25° to 55°C, 6 cycles, >93% RH

Damp Heat, Steady:
IEC 60068-2-78:2012
Severity Level:
40°C, 240 hours, >93% RH

Dry Heat, Operational:
IEC 60255-1:2009
IEC 61850-3:2013
IEC 60068-2-2:2007
Severity Level: 16 hours at 85°C

Dry Heat, Storage:
IEC 60255-1:2009
IEC 61850-3:2013
IEC 60068-2-2:2007
Severity Level: 16 hours at 85°C

Vibration:
IEC 60255-21-1:1988
Severity Level:
Endurance Class 2
Response Class 2
IEC 60255-21-2:1988
Severity Level:
Shock Withstand, Bump Class 1
Shock Response Class 2
IEC 60255-21-3:1993
Severity Level:
Quake Response Class 2

Safety

Enclosure Protection*:
IEC 60255-27:2013
Severity Level:
IP3X on all surfaces except:
IP4X on front surface
IP2X on SFP cage
IP1X on wiring terminals

Note: The SFP cage is IP4X-compatible when an SFP module or dust cover is installed.

Dielectric Strength:
IEC 60255-27:2013
IEEE C37.90-2005
Severity Level:
3600 Vdc on power supply and OUT201–OUT208
2500 Vac on contact inputs, OUT101, and BNC IRIG-B IN
1500 Vac on Ethernet ports
Type tested for one minute

Impulse:
IEC 60255-27:2013
IEEE C37.90-2005
Severity Level:
5 kV power supply, contact I/O, BNC IRIG-B IN
1.5 kV Ethernet ports

* Self-declared rating.

Table 1.2 System Power Consumption

Power Consumption (Watts)[a]			
Component	**Minimum**	**Typical**	**Maximum**
Base System (1 PSU, 1 SATA Drive)	17 W	20 W	33 W[b]
Additional Consumption From Optional Components			
2nd Power Supply	+1 W	+1 W	+1 W
2nd SATA Drive	+1 W	+2 W	+3 W
32-Port Serial Expansion Board	+2 W	+5 W	+14 W[b]
I/O Expansion Board (8 DO/24 DI)	+1 W	+2 W	+4 W
USB Peripherals	+0 W	+1 W	+7 W

[a]Minimum: 0% load on all components; minimum power consumption started and idle. Typical: 25–50% load on all components; good indication of most application loads. Maximum: 100% load on all components; generally cannot be reached in normal applications.
[b]Includes component power and maximum +5 Vdc serial port power output (see Table 1.3) to port-powered devices (modems, transceivers).

Table 1.3 Peripheral Connection Rated Current Output

Connection	Current Limit
Display Port	0.5 A, +3.3 Vdc, 1.6 W
COM 1–16	0.5 A, +5 Vdc, 2.5 W all ports combined
COM 17–48	1.0 A, +5 Vdc, 5 W all ports combined
USB Ports	1.5 A, +5 Vdc, 7.5 W all ports combined

This page intentionally left blank

SECTION 2

Installation

Overview

This section describes the common features and requirements for installing an SEL-3350. Because the SEL-3350 can be ordered with a variety of hardware and software options, you must be familiar with the device configuration in order to install and connect the SEL-3350 safely and effectively.

Carefully plan unit placement and cable connections during the initial design. The front-panel (*Figure 2.5*) and rear-panel (*Figure 2.7*) drawings show the locations of system connections such as video, USB, Ethernet, serial, and power. Use these drawings as a starting point for planning your installation.

Unit Placement and Maintenance

For trouble-free operation, use the following guidelines to properly install the SEL-3350.

Physical Location

Mount the SEL-3350 in a sheltered indoor environment (a building or an enclosed cabinet) that does not exceed the temperature and humidity ratings for the unit (see *Specifications on page 11*). The unit is rated as Installation/Overvoltage Category II (at <5 km altitude) and Pollution Degree 2. These ratings allow you to mount the unit indoors or in an outdoor (extended) enclosure where the unit is protected against exposure to direct sunlight, precipitation, and full wind pressure, but temperature and humidity are not controlled. To satisfy safety requirements, the unit shall be installed in a suitable fire/electrical/mechanical enclosure. To protect against electrical shock hazards, the enclosure shall prevent access to the rear power supply and I/O terminals during normal operation.

Unit Mounting

Panel-mount and 19-inch rack-mount options are available in both the 1U and 3U chassis. *Figure 2.1* and *Figure 2.2* show the dimensions and panel cutout size for the 1U chassis. *Figure 2.3* and *Figure 2.4* show the dimensions and panel cutout size for the 3U chassis. The finned aluminum front heatsink provides efficient passive cooling from the ambient air around the SEL-3350. No fans or forced air ventilation are required, but a minimum of 2.5 cm (1 inch) clearance around the heatsink is recommended.

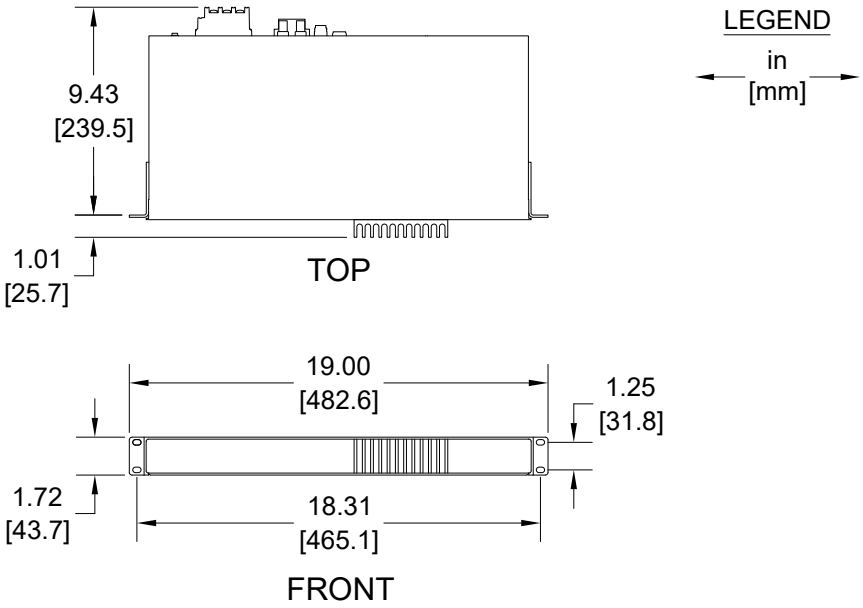

Figure 2.1 SEL-3350 1U Rack-Mount Dimensions

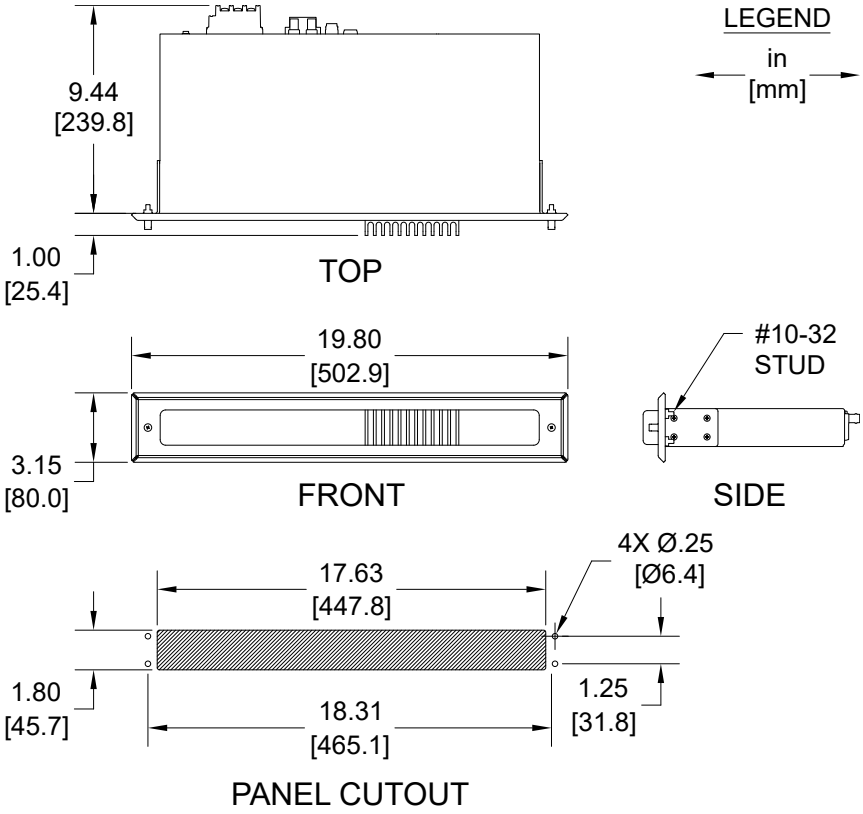

Figure 2.2 SEL-3350 1U Panel-Mount Dimensions

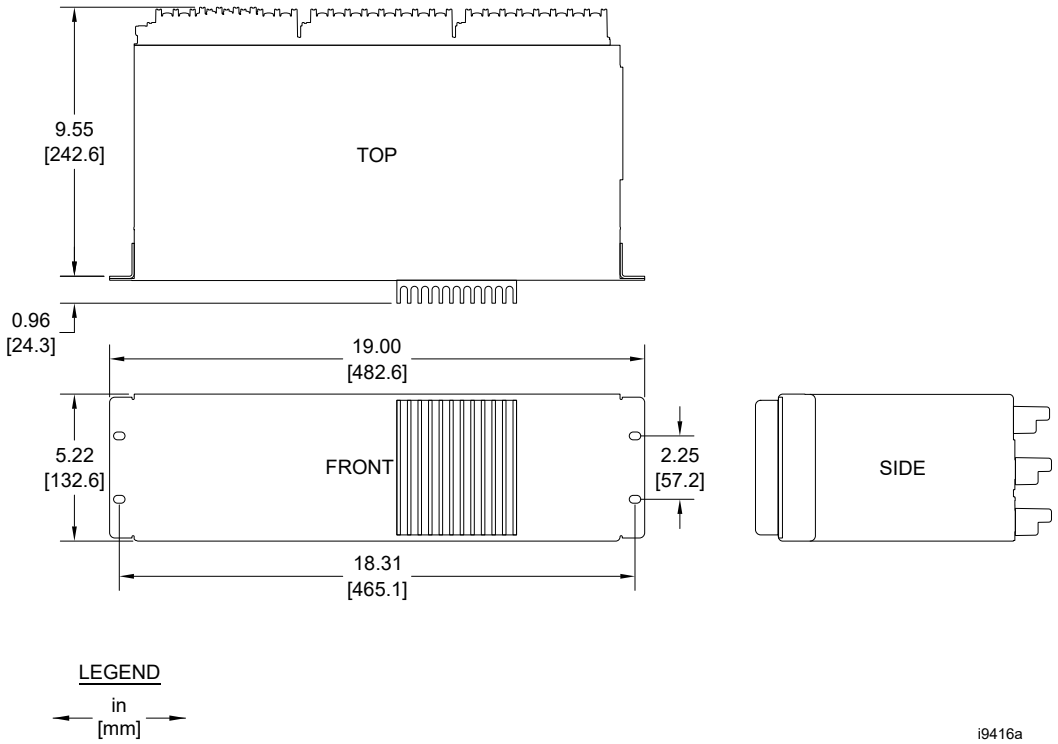

Figure 2.3 SEL-3350 3U Rack-Mount Dimensions

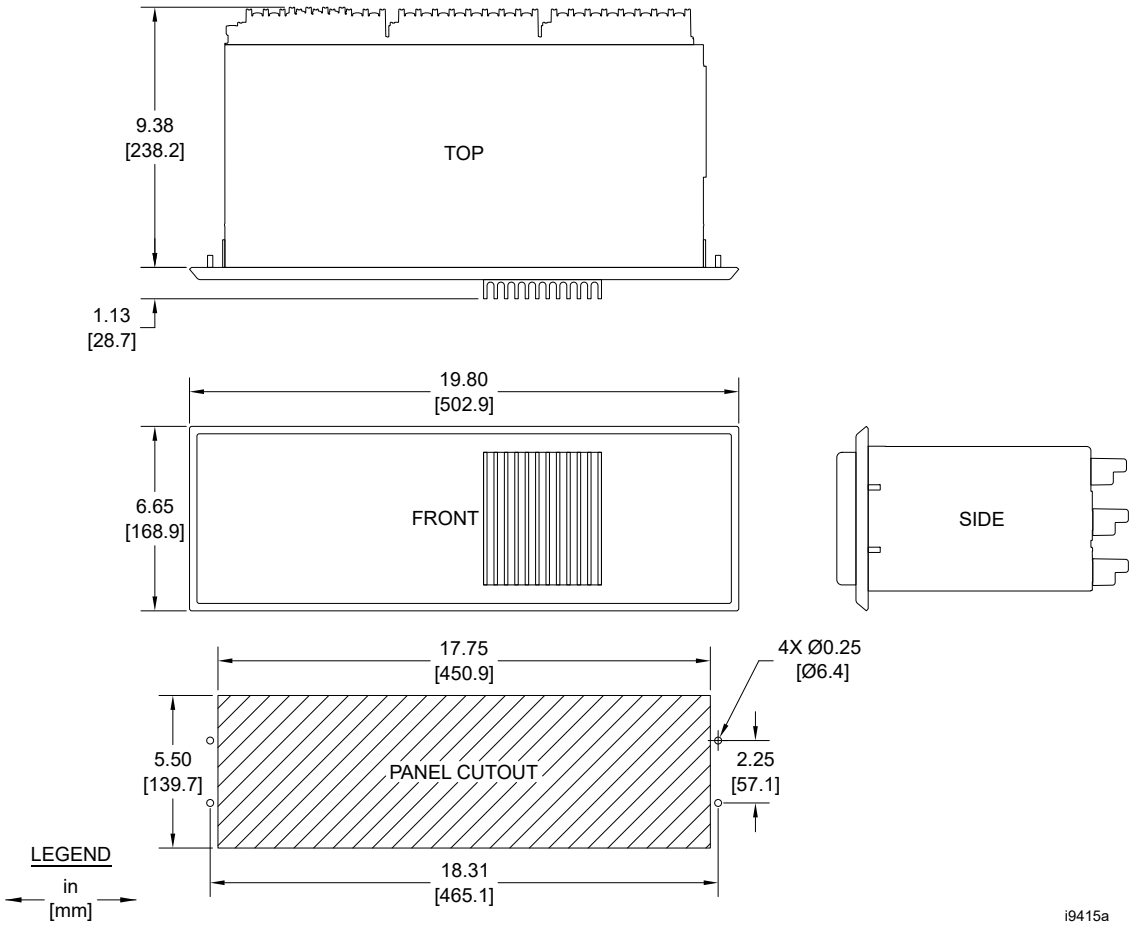

Figure 2.4 SEL-3350 3U Panel-Mount Dimensions

Cleaning

Use care when cleaning the SEL-3350. Use a damp cloth with mild soap or detergent solution to clean the unit chassis. Allow the unit to air dry, or wipe dry with a soft, dry cloth. Do not use abrasive materials or polishing compounds on any unit surface. A permanent plastic sheet covers the front panel; do not use harsh chemical solvents such as xylene or acetone when cleaning these surfaces.

Front Panel

Figure 2.5 and *Figure 2.6* show the physical layout of the connectors on the front panel of an SEL-3350.

Figure 2.5 SEL-3350 1U Front-Panel Rack-Mount Option

Figure 2.6 SEL-3350 3U Front-Panel Rack-Mount Option

Lamp Test Button

Press the **LAMP TEST** button to illuminate all LEDs. The **LAMP TEST** button can be configured to function as a power or reset button or it can be completely disabled (see *Boot Features on page 62*). When the system is in a shutdown state, the **LAMP TEST** button always acts as a power button, starting the system when pressed.

Status Indicators

The **ENABLED** LED displays operational status with green for normal operation and turns off while the system is starting up, has halted, or is experiencing an error condition.

The **ALARM** LED illuminates red when the system alarm is active, indicating a nonoptimal system condition. For details regarding the system alarm function, see *Section 6: System Software and Settings*.

The **HDD** LED indicates SATA drive activity. The blink rate indicates how much SATA drive activity is taking place. A fast blink or constant illumination indicates high SATA drive activity.

The Ethernet LEDs indicate network link status and transmit and receive activity for the rear Ethernet ports and also blink when you enable the Identify Port feature in the system software. See *Ethernet Ports on page 47* for more information.

The Serial LEDs indicate transmit and receive activity for the serial ports and also blink when you enable the Identify Port feature in the system software. See *Serial Ports on page 49* for more information.

The Contact Input and Output LEDs indicate the state of the contact inputs and outputs on the optional Contact I/O board. These red LEDs indicate when each contact input and output is asserted. See *Contact Inputs and Outputs on page 55* for more information.

Auxiliary LEDs are programmable for your custom application. The four auxiliary indicators can be separately programmed to: red, green, or off. These LEDs also indicate the status of the boot sequence during system initialization. Once the boot sequence is complete, the LEDs turn off, allowing your application to take control. A slide-in label area can be used to define the purpose of each LED. For details regarding the Auxiliary LED functions, see *Section 6: System Software and Settings*.

Front Ethernet Port

The SEL-3350 is equipped with one front-panel RJ45 10/100/1000BASE-T Ethernet port, labeled **ETH F**. All Ethernet ports on the SEL-3350 can be used at the same time as independent network adapters with unique media access control (MAC) addresses. This port is useful for quick and secure engineering access to the SEL-3350 without affecting the networks connected to the rear Ethernet ports. The port LEDs indicate network link status and activity and also blink when you enable the Identify Port feature in the system software. See *Ethernet Ports on page 47* for more information.

USB Ports

Two USB 3.1 gen 1 ports enable connecting custom application-specific high-speed peripherals. Enter the BIOS setup to selectively disable any unused USB ports for increased security.

Device Label

The slide-in label area on the right side of the front panel can be used to customize the SEL-3350 with a device name, label, or logo.

Rear Panel

Figure 2.7 and *Figure 2.8* show the physical layout of the connectors on the rear panel of an SEL-3350.

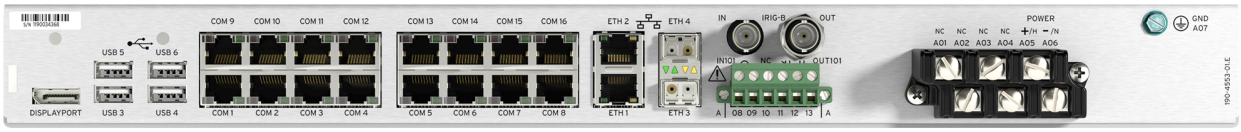

Figure 2.7 SEL-3350 1U Rear-Panel

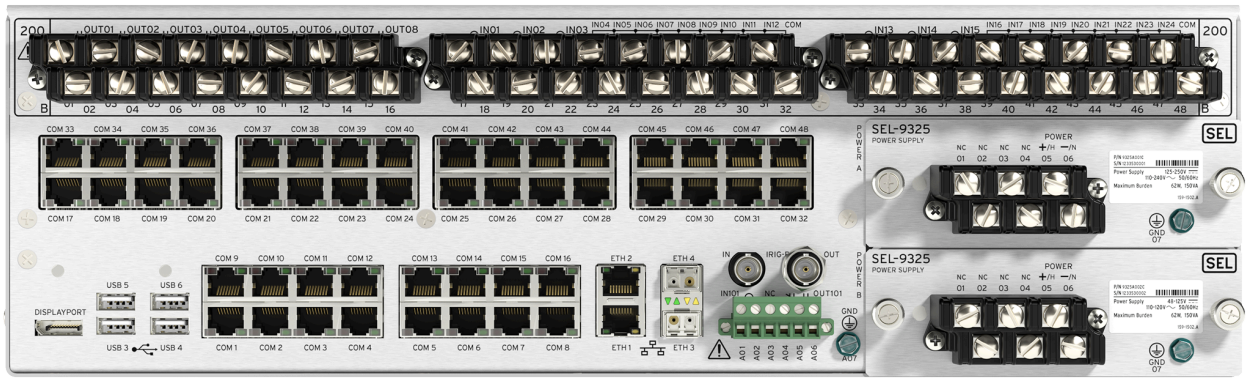

Figure 2.8 SEL-3350 3U Rear-Panel

DisplayPort

The SEL-3350 has one DisplayPort 1.2 output (**DISPLAYPORT**) that can support up to three monitors and output digital audio to devices that support DisplayPort audio. DisplayPort Multi Stream Transport (MST) monitors or hubs are required for multiple monitors.

USB Ports

Four USB 2.0 ports enable connecting keyboard, mouse, and custom application-specific peripherals. Enter the BIOS setup to selectively disable any unused USB ports for increased security.

Serial Ports

The SEL-3350 comes standard with 16 RJ45 serial communications ports, and is optionally available with 48 serial ports (3U chassis only), providing EIA-232/422/485 communication to many devices. The RJ45 connectors have integral green (transmit) and red (receive) status LEDs that work in unison with the front-panel status LEDs. The LEDs also blink when you enable the Identify Port feature in the system software. Each serial port also distributes IRIG-B for time synchronization and can provide +5 Vdc port power to simplify wiring to devices such as modems and fiber-optic transceivers. See *Serial Ports on page 49* for more information.

Ethernet Ports

The SEL-3350 is equipped with four rear-panel Ethernet ports. The four Ethernet ports can be ordered as four RJ45 copper, four SFP fiber-optic, or two RJ45 and two SFP fiber-optic ports. All Ethernet ports on the SEL-3350 can be used at the same time as independent network adapters with unique MAC addresses. The port LEDs indicate network link status and activity and also blink when you enable the Identify Port feature in the system software. See *Ethernet Ports on page 47* for more information. The RTAC operating system default IP addresses for Ethernet ports are:

- ETH1: 192.168.1.2
- ETH2: 192.168.2.2
- ETH3: 192.168.4.2
- ETH4: 192.168.5.2
- ETHF: 192.168.3.2

IRIG-B IN

The BNC **IRIG-B IN** connector accepts demodulated IRIG-B002 and IRIG-B004 inputs. The system clock and IRIG-B outputs can be configured to synchronize to the IRIG-B input using the SEL-3350 system software. See *IRIG-B Input/Output on page 54* for more information.

IRIG-B OUT

The BNC **IRIG-B OUT** connector provides demodulated IRIG-B004 output with IEEE C37.118.1-2011 control bits. The IRIG-B OUT can be synchronized to the SEL-3350 system clock or IRIG-B IN. The IRIG-B OUT can be configured using the SEL-3350 system software. See *IRIG-B Input/Output on page 54* for more information.

Grounding

Connect all chassis and power supply grounding terminals labeled **GND** on the rear panel (see *Figure 2.7*) to a rack frame ground or main station ground for proper safety and performance. Use 14 AWG (2 mm^2) or larger wire, less than 3 m (10 ft) in length, for this connection. All ground terminals connect directly to the internal chassis ground of the SEL-3350.

Contact Inputs

⚠ DANGER
Contact with instrument terminals can cause electrical shock that can result in injury or death.

⚠ DANGER
Safety insulation is not provided between contact I/O terminals. If hazardous live voltage is attached to one terminal, all contact I/O terminals must be treated as hazardous live. Failing to do so can cause electrical shock that can result in injury or death.

⚠ WARNING
Stranded wire presents a risk of exposing the user to contact with hazardous voltages if not all the strands are captured in the terminals. Use crimp ferrules to safely capture all wire strands.

⚠ WARNING
Contact I/O terminals are considered hazardous at any voltage level. External equipment connected to contact I/O terminals must provide electrical isolation that meets or exceeds the maximum rated contact I/O voltage listed in Specifications on page 11.

Connect the grounding terminal before applying or removing power to any contact input terminals. You can configure the contact inputs to respond to ac or dc control signals at many voltage ratings. Connect the contact inputs to external devices or switches to control automation logic running in the SEL-3350 system software.

The **IN101** contact input is included on all SEL-3350 platforms. The **IN201**–**IN224** contact inputs are optional and only available with the 3U chassis.

The **IN101** contact input includes a unique rms voltage measurement feature for applications such as battery monitoring. Additionally, you can use **IN101** for remote reset or power control by enabling the "IN101 Lamp Test Button" system jumper and configuring the "Lamp Test Button Behavior" setting in the BIOS setup.

The configurable voltage levels and pickup and dropout delays can be set through the SEL-3350 system software. See *Contact Inputs and Outputs on page 55* for more information.

Contact Outputs

⚠ DANGER
Contact with instrument terminals can cause electrical shock that can result in injury or death.

⚠ WARNING
The voltage across any of the contact output terminals must not exceed the rated operational voltage.

⚠ WARNING
Always use an overcurrent protection device such as a circuit breaker or fuse. The contact output must operate on the load side of the overcurrent protection device. The type and size of the overcurrent protection device must be appropriate for the connected load and wiring.

⚠ WARNING
Contact I/O terminals are considered hazardous at any voltage level. External equipment connected to contact I/O terminals must provide electrical isolation that meets or exceeds the maximum rated contact I/O voltage specified in Specifications on page 11.

⚠ WARNING
Stranded wire presents a risk of exposing the user to contact with hazardous voltages if not all the strands are captured in the terminals. Use crimp ferrules to safely capture all wire strands.

⚠ DANGER
Safety insulation is not provided between output contact terminals. If hazardous live voltage is attached to one terminal, all contact output terminals must be treated as hazardous live. Failing to do so can cause electrical shock that can result in injury or death.

⚠ DANGER
Safety insulation is not provided between contact I/O terminals. If hazardous live voltage is attached to one terminal, all contact I/O terminals must be treated as hazardous live. Failing to do so can cause electrical shock that can result in injury or death.

Connect the grounding terminal before applying or removing power to any output terminals. Connect the contact outputs to external devices such as audible/visual alarms, machines, or contact inputs, and control them using automation logic running in the SEL-3350 system software. For contact ratings, see *Specifications on page 11*.

The **OUT101** contact output is included on all SEL-3350 platforms. It is a Form C dry contact, which can be wired either normally closed or normally open. The **OUT201**–**OUT208** contact outputs are optional and only available with the 3U chassis. These outputs are Form A dry contacts, which are normally open.

By default, the **OUT101** output is coupled to the SEL-3350 system alarm to provide alarm status to external devices. The output can be decoupled from the system alarm, allowing it to operate as an independent contact output to control external devices.

The contact outputs are configured and controlled through the SEL-3350 system software. See *Contact Inputs and Outputs on page 55* for more information.

Power

⚠DANGER
Contact with instrument terminals can cause electrical shock that can result in injury or death.

⚠WARNING
Do not operate device unless properly grounded.

⚠WARNING
Failure to ensure proper voltage levels can cause equipment damage.

⚠CAUTION
Do not make any wire connections to the power terminals 01 through 04.

Connect the grounding terminal before applying or removing power to the power terminals. Connect the **POWER** terminals on the rear panel, labeled **+/H** and **-/N**, to the proper ac or dc power source. Ensure the connected voltage is within the rated range for the power supply. Rated voltages are indicated on the SEL-3350 serial number label and the label on the face of the power supply module, see *Specifications on page 11* for full power supply ratings.

The 3U chassis contains two power supply slots, allowing you to install an optional second redundant power supply and wire it to an independent power source for maximum availability. Power supplies are hot-swappable, see *Power Supply on page 41* for removal and installation instructions.

NOTE
If equipment is powered from a power converter, an external breaker may not be required between the power converter and the equipment. Refer to the manufacturer's power converter and power system external overcurrent protection requirements.

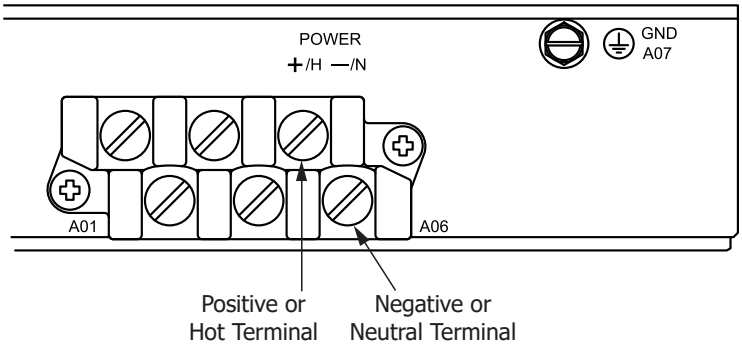

Figure 2.9 Power Connections

Place an external switch, circuit breaker, or other overcurrent protection device in the power leads. The overcurrent protection device must interrupt both the hot and neutral power leads if it is dc powered. An overcurrent protection device rated for 20 A is recommended. Be sure to locate this device within 2 m (6.6 ft) of the SEL-3350. Disconnect devices must comply with IEC 60947-1 and IEC 60947-3-1.

NOTE
If the 420-1174 IEC C14 Adapter is installed, an overcurrent protection device rated for 10 A is recommended, and you must procure an IEC C13 Line cord that is compliant with the regulations for your region. See the 420-1174 IEC C14 Adapter Instruction Sheet for specifications and installation instructions.

Initial Checkout and Startup

NOTE
Passwords and usernames should be configured during initial setup to ensure device security. Forgetting the administrator username or password may require re-installation of your operating system.

Step 1. Connect a monitor, keyboard, and mouse to the SEL-3350.

Step 2. Apply power to the SEL-3350 and turn on the monitor.

Step 3. The SEL-3350 will go through the initial BIOS startup and then start the operating system that was installed from the factory, if any. Some additional setup may be required at this stage, such as providing a device name, username, and password.

Step 4. Enter the username and password to log into the operating system if present; otherwise, proceed with the operating system installation.

Proceed with hardware and BIOS setup if necessary.

This page intentionally left blank

SECTION 3

Hardware Setup and Serviceability

Overview

This section provides details for how to configure and service the individual hardware components that make up the SEL-3350.

Mainboard

Figure 3.1 shows the components and their locations on the SEL-3350 mainboard.

⚠ CAUTION

The mainboard is not field serviceable and should not be removed from the SEL-3350. Doing so will compromise the thermal interface material between the CPU and heatsink, which, if not replaced properly, can cause damage to the system.

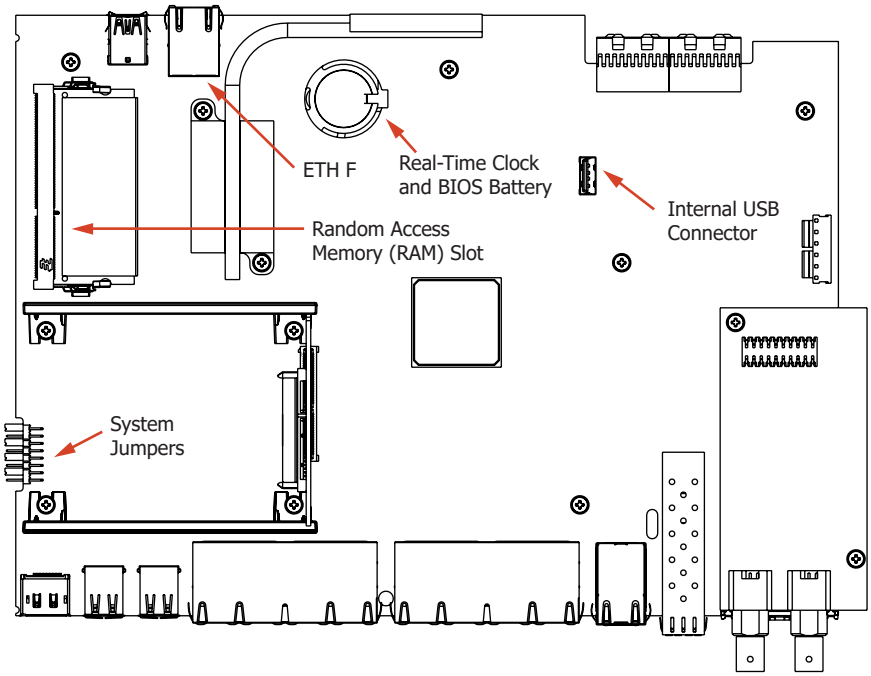

Figure 3.1 Mainboard Diagram

Top Panel Removal and Installation

To access internal mainboard components, you must remove the top panel from the SEL-3350. Follow the steps below to safely remove the top panel and then re-install it when finished.

Removal

⚠ DANGER
Disconnect or de-energize all external connections before opening this device. Contact with hazardous voltages and currents inside this device can cause electrical shock resulting in injury or death.

⚠ WARNING
Have only qualified personnel service this equipment. If you are not qualified to service this equipment, you can injure yourself or others, or cause equipment damage.

⚠ CAUTION
Equipment components are sensitive to electrostatic discharge (ESD). Undetectable permanent damage can result if you do not use proper ESD procedures. Ground yourself, your work surface, and this equipment before removing any cover from this equipment. If your facility is not equipped to work with these components, contact SEL about returning this device and related SEL equipment for service.

Step 1. Follow the standard procedure of your company to remove a device from service.

Step 2. Disconnect power from the SEL-3350, retaining the chassis ground connection.

Step 3. Disconnect all data, peripheral, and I/O cable connections.

Step 4. Remove the SEL-3350 from the mounting location.

Step 5. Ground the SEL-3350 to an ESD mat and follow the ESD procedures to ground yourself to the ESD mat.

Step 6. Remove all screws, on the top panel, rear panel, and rear edge of the side and bottom panels. Remove the **IRIG-OUT** nut and washer, as indicated in *Figure 3.2* and *Figure 3.3*.

Step 7. Slide the top panel toward the rear of the chassis until it is free, then remove.

Installation

Step 1. Set the top panel on the SEL-3350 chassis and slide it forward until it is fully seated, taking care to ensure all ports are aligned with the cutouts in the rear panel.

Step 2. Install all the screws on the top panel, rear panel, and rear edge of the side and bottom panels. Install the **IRIG-OUT** nut and washer, as indicated in *Figure 3.2* and *Figure 3.3*.

Step 3. Disconnect the ESD mat connections.

Step 4. Remount the SEL-3350 and reconnect the chassis ground.

Step 5. Reconnect all data, peripheral, and I/O cables.

Step 6. Reconnect power to the SEL-3350.

Step 7. If the SEL-3350 does not start up automatically, press the **LAMP TEST** button to initiate startup.

Step 8. Follow your company standard procedure to return the SEL-3350 to service.

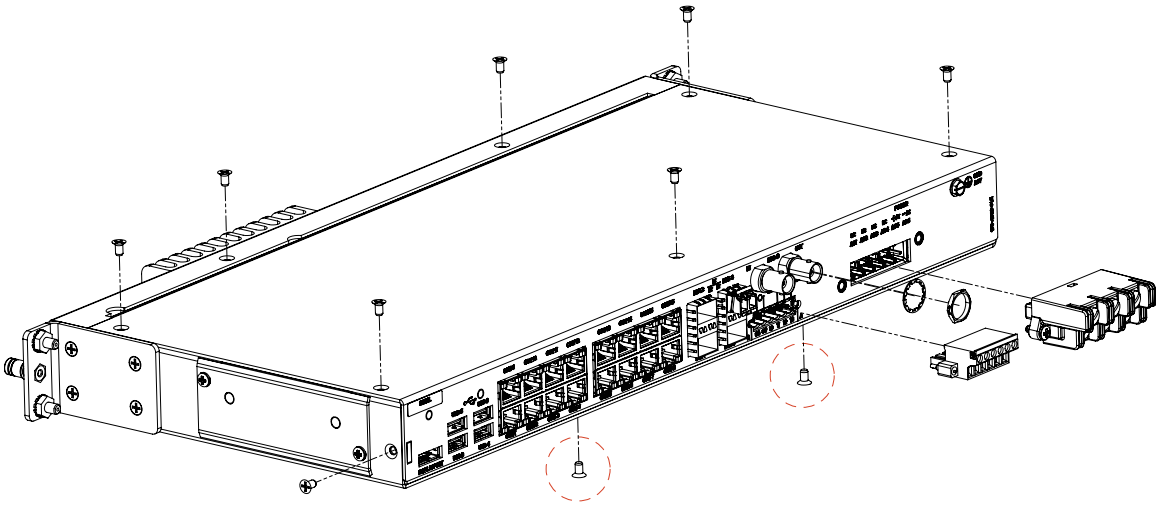

Figure 3.2 1U Chassis Top Panel Removal

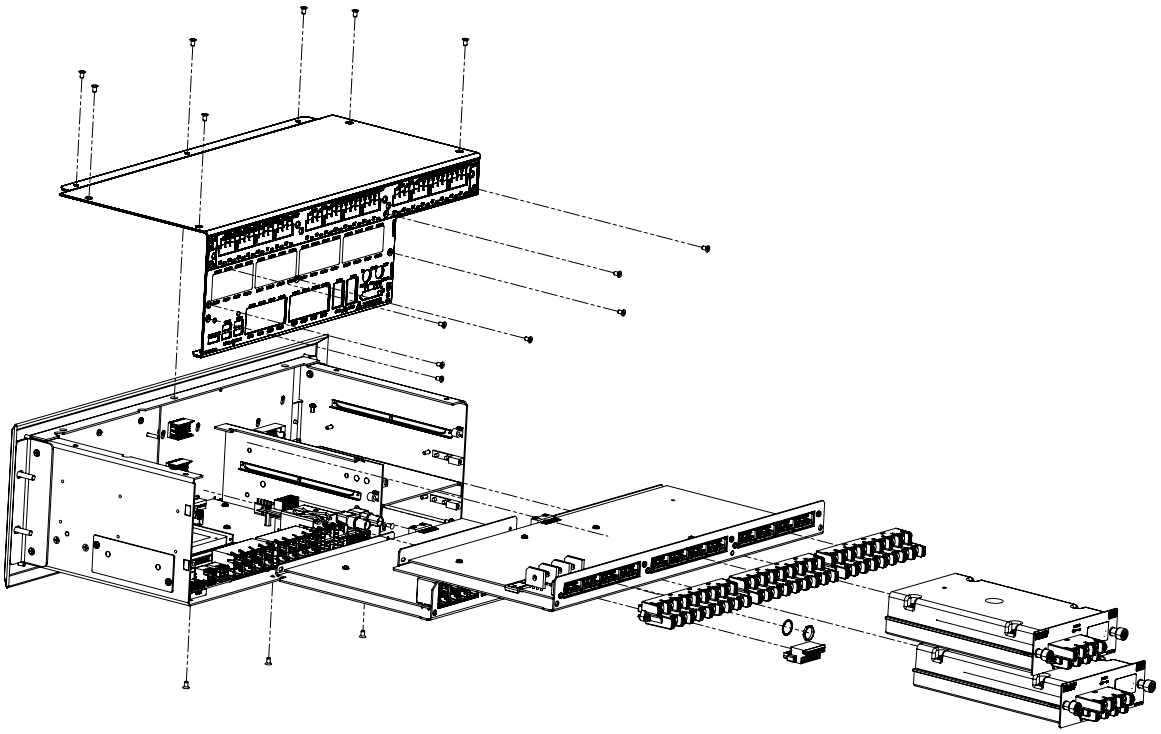

Figure 3.3 3U Chassis Top Panel Removal

Real-Time Clock and BIOS Battery

The SEL-3350 contains a button cell battery that is used to maintain the BIOS settings and clock when an external power source is disconnected. When power is disconnected, if the SEL-3350 system clock fails to maintain the accurate date and time, the battery may need to be replaced.

If the battery needs to be replaced, the time and date will revert to midnight of the BIOS build date. You can confirm this by examining the **SMBIOS Event Log** in **BIOS Setup** (see *Event Logs Menu on page 65*), which should contain a **CMOS Battery Failure** message. Perform the following steps to replace the battery:

⚠CAUTION
There is danger of explosion if the battery is incorrectly replaced. Replace only with Panasonic No. BR-2330A or equivalent recommended by manufacturer. See Owner's Manual for safety instructions. The battery used in this device may present a fire or chemical burn hazard if mistreated. Do not recharge, disassemble, heat above 100°C or incinerate. Dispose of used batteries according to the manufacturer's instructions. Keep battery out of reach of children.

Step 1. Remove the top panel following the steps in *Top Panel Removal and Installation on page 37*.

If the SEL-3350 has any expansion boards or trays above the mainboard, remove them by sliding them out toward the back of the chassis.

Step 2. Locate the battery on the mainboard near the ETH F connector (see *Figure 3.1*).

Step 3. Lift the edge of the battery slightly and slide it out from under the battery holder clip.

Step 4. Replace the battery with an exact replacement by sliding it in under the battery holder clip.

Use a 3 V lithium coin cell, Panasonic No. BR-2330A or equivalent. The positive side (+) of the battery faces up.

Step 5. If any expansion boards or trays were removed, install them by aligning the tray edges with the slots in the chassis and sliding them forward into the chassis.

Step 6. Install the top panel following the steps in *Top Panel Removal and Installation on page 37*.

Step 7. Set the system date and time either in BIOS Setup or after logging into the operating system. See *Section 4: BIOS Setup* for more information.

Random-Access Memory Slot

The SEL-3350 mainboard has a single RAM slot that accepts one ECC SO-DIMM memory module with a maximum capacity of 8 GB. Use only memory modules provided by SEL for the SEL-3350.

⚠CAUTION
Installing a non-ECC memory module may cause permanent damage to the SEL-3350 mainboard.

Internal USB

The mainboard for the SEL-3350 contains one internal USB 2.0 connector, allowing you to install low-profile USB storage devices and license keys securely inside the chassis. Use industrial temperature-rated USB devices whenever possible to ensure proper operation during extreme temperatures.

Power Supply

The SEL-3350 has two chassis options, each with different power supply configurations. The 1U chassis has a single internal power supply, while the 3U chassis allows for dual redundant power supply modules. The power supplies are available in three different input voltage ratings, each with a wide input voltage range and high energy efficiency. See *Power on page 34* for important safety information on properly connecting the power supply, and *Specifications on page 11* for full power supply ratings.

When the SEL-3350 is configured with dual power supplies, the voltage ratings of those supplies can be the same or different, allowing you to use a variety of primary and backup power sources with seamless transition during a service outage. The power supplies operate in parallel with no load balancing, so both power sources must be capable of fully powering the SEL-3350.

Removal and Installation

The internal power supply in the 1U chassis is not designed to be changed or replaced in the field. The 3U chassis power supply modules can easily be changed or replaced, even while the SEL-3350 is running (i.e., hot-swapped) as long as the other power supply is installed and energized.

The power supply modules have two thumbscrews that secure them to the SEL-3350 3U chassis. To safely remove a power supply module, you must first disconnect its power source. Then unscrew the thumbscrews until they spin freely, and pull the power supply out until it is free of the chassis. Installation is the opposite of removal.

Fuse Replacement

On all SEL-3350 power supplies, operational power is internally fused by power supply fuse F1. See *Specifications on page 11* for power supply fuse requirements. Be sure to use a fuse that complies with IEC 60127-2:2014. Perform the following steps to replace the fuse.

SEL-3350 With 1U Chassis

Step 1. Remove the top panel following the steps in *Top Panel Removal and Installation on page 37*.

Step 2. Remove the two screws from the IRIG-B daughter board and gently lift the board straight up off the mainboard. Set the IRIG-B daughter board to the side on an ESD protective mat.

Step 3. Gently lift the black plastic insulation sheet off the IRIG-B daughter board stand-offs and connector pins, then lift the insulation sheet toward the rear to expose the power supply board.

Step 4. Locate the fuse labeled F1 at the rear of the power supply board, near the rear-panel power connector (see *Figure 3.3*).

Step 5. Examine the power supply for blackened parts or other damage. If you can see obvious damage, contact SEL to arrange to return the SEL-3350 for repair. If there is no apparent damage to the power supply, proceed with *Step 6*.

Step 6. Remove the plastic fuse cover by lifting it upward from the fuse holder.

Step 7. Remove the spent fuse by lifting it upward from the fuse holder.

Step 8. Replace the fuse with an exact replacement (see *Specifications on page 11*).

Step 9. Reinstall the plastic fuse cover by aligning it with the fuse holder and gently pressing down.

Step 10. Reinstall the black plastic insulating sheet by placing it back into its original location, sliding it over the IRIG-B connector pins and stand-offs.

Step 11. Reinstall the IRIG-B daughter board by carefully aligning the connector pins and applying gentle downward pressure until it seats on the stand-offs; then reinstall the two screws.

Step 12. Install the top panel following the steps in *Top Panel Removal and Installation on page 37*.

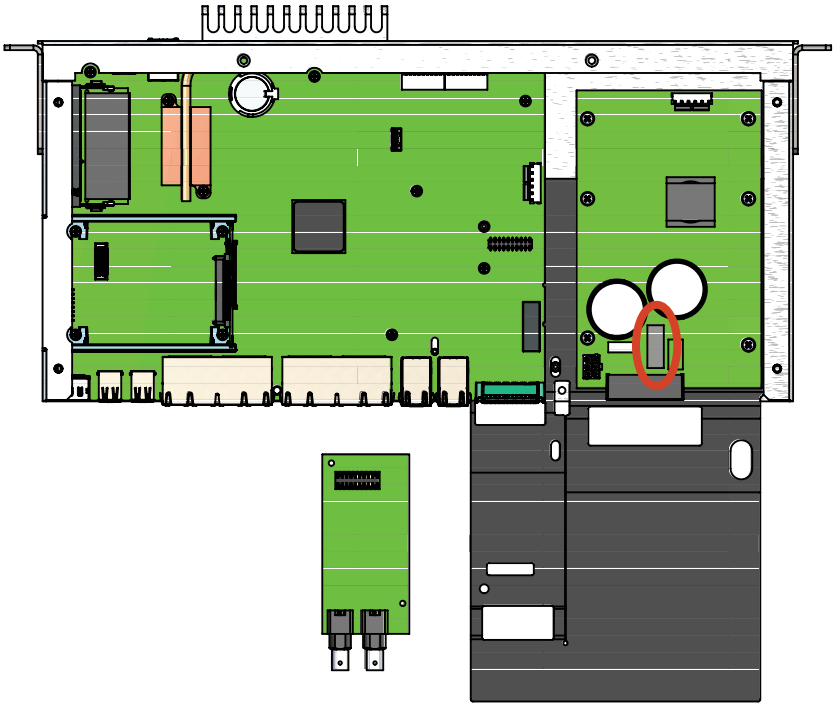

Figure 3.4 Power Supply Fuse Location

SEL-3350 With 3U Chassis

⚠ DANGER
Disconnect or de-energize all external connections before opening this device. Contact with hazardous voltages and currents inside this device can cause electrical shock resulting in injury or death.

⚠ WARNING
Have only qualified personnel service this equipment. If you are not qualified to service this equipment, you can injure yourself or others, or cause equipment damage.

⚠ CAUTION
Equipment components are sensitive to electrostatic discharge (ESD). Undetectable permanent damage can result if you do not use proper ESD procedures. Ground yourself, your work surface, and this equipment before removing any cover from this equipment. If your facility is not equipped to work with these components, contact SEL about returning this device and related SEL equipment for service.

Step 1. Remove the power supply module from the SEL-3350 following the instructions in *Removal and Installation on page 41*.

Step 2. Remove the four screws from the top of the power supply module, then remove the power supply top panel.

Step 3. Locate the fuse labeled F1 at the rear of the power supply board, near the rear-panel power connector (see *Figure 3.5*).

Step 4. Examine the power supply for blackened parts or other damage. If you see obvious damage, contact SEL to arrange to return the SEL-3350 for repair. If there is no apparent damage to the power supply, proceed with *Step 5*.

Step 5. Remove the plastic fuse cover by lifting it upward from the fuse holder.

Step 6. Remove the spent fuse by lifting it upward from the fuse holder.

Step 7. Replace the fuse with an exact replacement (see *Specifications on page 11*).

Step 8. Reinstall the plastic fuse cover by aligning it with the fuse holder and gently pressing down.

Step 9. Reinstall the top panel by placing it back into its original location, carefully aligning all edges, and then reinstalling the four screws.

Step 10. Install the power supply module into the SEL-3350 following the instructions in *Removal and Installation on page 41*.

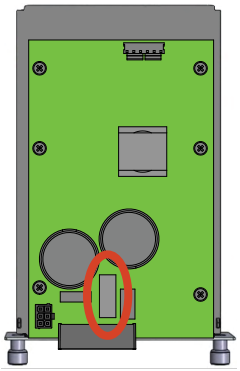

Figure 3.5 Power Supply Fuse Location (3U Chassis Power Supply Module)

SATA Drives

A key feature of the SEL-3350 is its data storage capacity. The SEL-3350 can house as many as two, 2.5-inch serial ATA (SATA) drives. Refer to *Requirements on page 45* for help with SATA drive selection.

⚠ CAUTION

Industrial-grade SATA drives (85°C or higher operating temperature rating) are required for the SEL-3350 to meet its full operating temperature rating. If using consumer-grade SATA drives, you must reduce the operating temperature rating of the SEL-3350 or drive failure may occur. When using non-SEL sourced SATA drives, the system operating temperature should be limited to the temperature rating of the SATA drives. SEL recommends performing thermal and reliability testing on any third-party SATA drives installed in the SEL-3350 prior to deploying the system.

NOTE

Most operating systems will logically address each drive from the bottom slot upward.

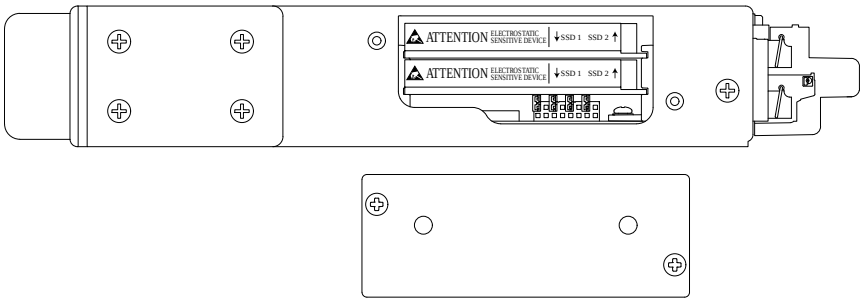

Figure 3.6 SATA Drive Slots and Cover Panel

Drive Types

SEL offers four types of SATA drives as factory-installed options for the SEL-3350: industrial-grade single-level cell (SLC) solid-state drives (SSDs), industrial-grade pseudo-SLC (pSLC) SSDs, industrial-grade 3D triple-level cell (3D TLC) SSDs, and consumer-grade multi-level cell (MLC) SSDs. The type of SSD you choose depends on your application.

SLC technology provides the highest level of endurance and reliability. SLC drives are suited for the most demanding applications and provide the best value for high-endurance applications in industrial environments. SLC SSDs from SEL carry the full SEL 10-year warranty.

pSLC drives provide high capacity at a lower cost but with reduced endurance. These drives are suited for industrial environments that require a large amount of drive space. pSLC SSDs from SEL carry a 5-year warranty.

MLC and 3D TLC drives provide the highest capacities and lowest cost but have the lowest endurance. These drives are suitable for applications that do not require a significant amount of write/erase cycles. Industrial-grade 3D TLC SSDs are appropriate for industrial environments and carry a 5-year warranty, while consumer-grade MLC SSDs are for use in office environments and carry a 3-year warranty.

For help in determining the best type of SSD for your application, refer to SEL Application Note, "Determining Solid-State Drive Lifetimes for SEL Computing Platforms" (AN2016-03), available on the SEL website at selinc.com.

Removal and Installation

The SATA drive slots are accessible by removing the SATA cover panel, located on the right-side of the chassis when viewed from the front (see *Figure 3.6*).

The SEL-3350 SATA drive slots are numbered with Port 1 being the bottom slot and Port 2 being the top. Each SATA drive is attached to a sled plate allowing for easy insertion and removal of the drive. To install a new SATA drive, it must first be attached to a sled plate using four screws through the mounting holes in the plate.

Requirements

Each SATA drive slot can accommodate a standard 2.5-inch form factor SATA drive, with a maximum drive height of 9.5 mm (0.37 inches). The SEL-3350 provides +5 V power to the drive slots, which accommodates most standard 2.5-inch SATA drives. Drives that require 12 V or 3.3 V power are not supported. The +5 V total combined continuous power consumption of all installed SATA drives must not exceed 10 W (2 A). Exceeding this limit will adversely affect performance and may lead to data loss and/or permanent damage.

When evaluating SATA drives sourced outside of SEL for use in the SEL-3350, you must carefully review the power consumption and temperature specifications of the SATA drives. Because the SEL-3350 has an unventilated chassis to keep out dust and other contamination, the air inside the chassis is typically warmer than external ambient air. This can limit the operating temperature range of the SATA drives when installed in the SEL-3350. For this reason, industrial-grade SATA drives (85°C or higher operating temperature rating) are required for the SEL-3350 to meet its full operating temperature rating. When using SATA drives sourced from other vendors, the system operating temperature should be limited to the temperature rating of the SATA drives. Prior to deploying the system, SEL recommends performing thermal and reliability testing on any SATA drives installed in the SEL-3350 that are sourced outside of SEL.

System Jumpers

The SEL-3350 system jumpers are used to enable functions that may be useful when the system is inaccessible by more conventional means, such as if you need to reset the BIOS or system software to factory-default settings because of a lost password, corrupt settings, or a failed upgrade. Under normal conditions, the system jumpers do not need to be changed from their factory configuration.

To access the system jumpers, remove the SSD cover panel. The jumpers are eight pairs of vertically stacked pins near the edge of the mainboard (see *Figure 3.1*). Each pair is a jumper position, labeled from left to right as positions A through H. The factory-default configuration is for all system jumpers to be disabled (the pins are not bridged), with a shunt installed on only one of the two pins of every other jumper position. To enable a system jumper function, remove and then reinstall the shunt in the listed position such that both pins are bridged by the shunt. *Table 3.1* lists the system jumper positions and their functions.

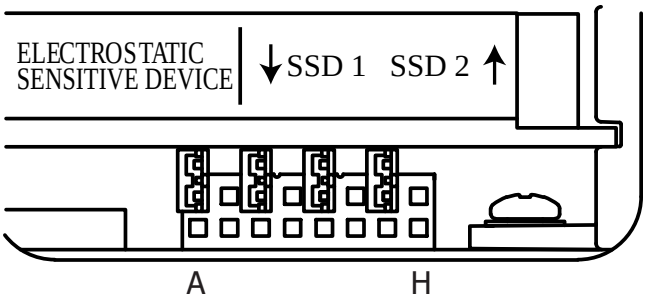

Figure 3.7 SSD Drive Bay Jumpers

Table 3.1 System Jumper Descriptions

Jumper Positions	Description
A	**BIOS Clear** Returns BIOS settings to their factory defaults. Does not affect the Trusted Platform Module (TPM) state.
B	**BIOS Recovery** Initiates the BIOS recovery mode to recover from a corrupted system BIOS. See *Recovery Mode on page 65*.
C	**Watchdog Disable** Completely disables the CPU watchdog. See *Watchdog on page 59*.
D	**Password Disable** Bypasses the BIOS password if one is set. May be used to bypass operating system or software passwords, such as the SEL RTAC[a] or SEL Blueframe[b] operating system.
E	**Reserved**
F	**IN101/LAMP TEST Button** Allows the **IN101** input to mimic the **LAMP TEST** button. See *Contact Inputs and Outputs on page 55*.
G	**Reserved**

Jumper Positions	Description
H	**SEL Operating System Factory Reset** If the SEL-3350 has an SEL operating system installed, such as SEL RTAC or SEL Blueframe, this jumper will return the operating system to a factory-default configuration.

[a]The Username must be an active account and the Password field must not be empty.
[b]The Password Disable jumper will prompt the user to set up a temporary access account.

Ethernet Ports

The SEL-3350 has five integrated Ethernet ports; one RJ45 copper port on the front (ETH F) and four ports on the rear (ETH 1–ETH 4). The rear Ethernet ports are available in three different configurations: four RJ45 copper ports, four SFP fiber-optic ports, or two RJ45 and two SFP ports. Each of the five ports operates as an independent network adapter with a unique MAC address, enabling communication with multiple networks as well as redundant network connections for fault tolerance.

NOTE
For instructions on any of the software-configurable Ethernet port settings or features, see Section 6: System Software and Settings.

RJ45 Copper Connections

⚠ CAUTION
The two Ethernet ports in an RJ45 connector stack are not electrically isolated from each other (for example ETH1 to ETH2, or ETH3 to ETH4), even though they are electrically isolated from protective earth. To meet IEEE 802.3 electrical isolation requirements, the two devices or LANs you connect to a given RJ45 stack must reside inside the same building and use the same power distribution system. When connecting to devices or LANs that cross the boundary between separate buildings or power distribution systems, ensure you connect them to different RJ45 connector stacks, or use fiber-optic connections.

The RJ45 Ethernet ports enable 10/100/1000BASE-T communication over copper cable lengths that are as long as 100 meters. The copper Ethernet ports support Auto MDI-X (auto-crossover) and auto-negotiation of speed, allowing simple plug-and-play connections with a standard Ethernet cable. Always choose an Ethernet cable that is rated for the connection speed. SEL recommends using a Cat 5 or higher cable for 10BASE-T connections and Cat 5e or Cat 6 for 100BASE-T or 1000BASE-T connections. For protection applications, always use double-shielded Ethernet cables.

SFP Fiber-Optic Connections

The SEL-3350 uses SFP modules for fiber-optic network connections. The SFP modules have LC-type fiber-optic connectors. See *Figure 3.8* for the positions of the transmit and receive ports. The SEL-3350 will auto-detect the type and speed of the SFP module for those provided by SEL. When using an

OS such as Windows or Linux, third-party SFP modules must be manually configured through the Ethernet device settings (see *Section 6: System Software and Settings*); The RTAC and Blueframe OSs do not support third-party SFP modules. See the SEL website at selinc.com for available SFP modules and fiber-optic cables.

NOTE

Although Class 1 lasers and LEDs are considered to be eye safe, avoid staring into the transmitter or fiber-end infrared radiation. Lasers and LEDs do not require maintenance and are not user-serviceable. Return the unit to the factory for repair or replacement.

SFP modules are hot-pluggable, meaning you can install or remove them while the host system is powered on and operational. To install an SFP module, move the bail clasp to the closed position and slide the module rear first into the SFP socket on the SEL-3350. Gently apply pressure on the face of the module to seat it into the socket. When fully seated, the bail clasp will be nearly flush with the socket. If the SFP module will not seat fully, it may be upside down; try installing it in the other direction. To remove the SFP module, simply open the bail clasp and gently pull on it until the module comes out of the socket. Install the dust plug into the SFP LC connector any time a fiber-optic cable is not connected in order to prevent the connector optics from being contaminated.

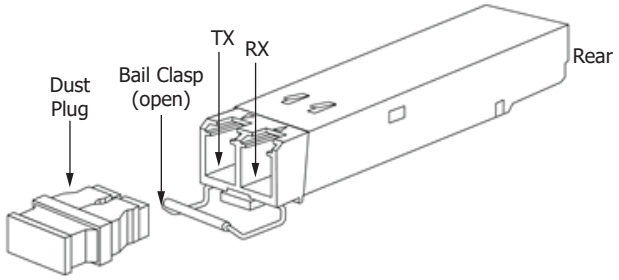

Figure 3.8 SFP Module Components

Status Indicators

Each Ethernet port has two LEDs that indicate network link status and activity and can be used to identify the port. The right (Link) LED illuminates yellow to indicate that a link or connection is present. The left (Activity) LED flashes green during transmit and receive activity. The rear Ethernet port LEDs work in unison with the front-panel Ethernet status LEDs to provide quick visual communication status from any position.

Identify Port

The Identify Port feature in the system software allows you to correlate each logical Ethernet device with each physical Ethernet port. When Identify Port is enabled, the Link and Activity LEDs on the Ethernet port will flash repeatedly in unison. The LEDs will stop flashing when you disable Identify Port. See *Section 6: System Software and Settings* for additional information.

Failover Mode

Failover Mode combines any two consecutive rear ports on the SEL-3350 into a pair, each with automatic failover based on link state. This enables physical port redundancy so that any failure of the port electronics, wire, or fiber-optic connection that causes a loss of link will trigger the SEL-3350 to automatically switch to the other port. The failover operation typically happens a few milliseconds after the link loss and does not require any special programming or features in the connected network device.

Redundant pairs must start on an odd-numbered port (e.g., ETH 1 and ETH 2 can be paired, but ETH 2 and ETH 3 cannot) and are enabled on a per-pair basis by enabling the feature for the odd-numbered port (enabling the feature on even-numbered ports does nothing). The link speed, duplex, and type of SFP module do not need to match on port pairs because they will be autonegotiated independently. The Ethernet controller will report the speed and duplex of the currently active port. The even-numbered ports may be reported as present by the system but do not function because they will always indicate they have no link.

The SEL-3350 does not give priority to any port. A failover only occurs when the currently active port loses the link. On initial connection or startup, the first port to get a link becomes the active port. External factors, such as the behavior of the network device that the SEL-3350 is connected to, the host operating system, and the type of network traffic, will be the largest contributors to failover time. For example, when connected to an unmanaged switch, after failover, the switch may not redirect traffic to the other port until it learns that the MAC address has moved to that port (when the host operating system transmits a packet that contains the MAC address).

See *Section 6: System Software and Settings* for additional information.

Precision Time Protocol (PTP)

Use PTP to synchronize client clocks to a master clock over an Ethernet network. It operates similarly to Network Time Protocol (NTP) but can achieve higher precision by using hardware time stamps on the packets as they traverse the network.

The SEL-3350 Ethernet ports provide PTP hardware time stamps, enabling PTP client software that supports hardware time stamps to achieve high-precision time synchronization over Ethernet. See *Section 6: System Software and Settings* for more information.

Serial Ports

The SEL-3350 comes standard with 16 RJ45 serial communications ports, and is optionally available with 48 serial ports (3U chassis only). Compared to standard DB-9 serial connectors, the RJ45 connectors used on the SEL-3350 are much smaller and have integral status LEDs, enabling a high port count and a simple visual status indication. By default, these ports function as standard EIA-232 ports, with the exception of an IRIG-B output and +5 Vdc port power

replacing the standard modem control signals (CD, DTR, and DSR signals are not available). Serial port features such as EIA-422/485 mode, +5 V power, and synchronous bit mode are configurable via software settings. All serial ports on the SEL-3350 have internal surge protection for improved reliability.

NOTE
For instructions on any of the software-configurable serial port settings or features, see Section 6: System Software and Settings.

RJ45 Serial Port Pinout

Each SEL-3350 serial port can be configured for different signaling modes to suit many applications. The EIA-232 and EIA-422/485 serial port pin functions are shown in *Table 3.2*, with the corresponding serial port RJ45 connector pin numbers shown in *Figure 3.9*.

Table 3.2 EIA-232 and EIA-422/485 Serial Port Connector Pin Definition for Ports 1-16

Pin	EIA-232	EIA-422/485
1	–IRIG-B out (GND)	–IRIG-B out (GND)
2	+5 Vdc port power[a]	+5 Vdc port power[a]
3	+IRIG-B out	+IRIG-B out
4	Signal Ground (GND)	Power Ground (GND)
5	Receive Data (RXD)	Receive Data Negative (RXD–)
6	Transmit Data (TXD)	Transmit Data Negative (TXD–)
7	Clear to Send (CTS)	Receive Data Positive (RXD+)
8	Request to Send (RTS)	Transmit Data Positive (TXD+)

[a] Software enabled.

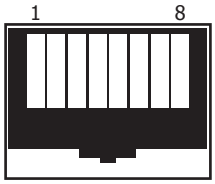

Figure 3.9 RJ45 Serial Connector Pin Numbers on SEL-3350

Common serial cable configurations are shown in *Figure 3.10* and *Figure 3.11*. Refer to the SEL-5801 Cable Selector Software (free software download from selinc.com.) for the most recent cable configurations. Shielded cables grounded on both ends or fiber-optic transceivers are required to meet all the EMI and EMC requirements listed in *Specifications on page 11*. Refer to the manual of the connected device and the SEL-5801 Cable Selector Software to select a proper cable.

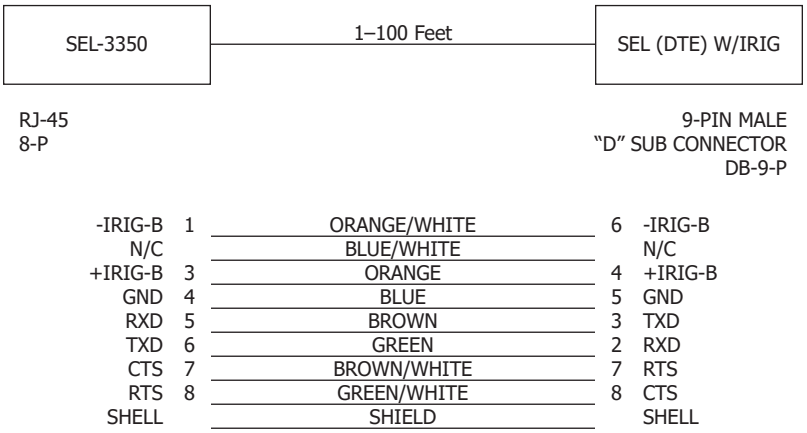

Figure 3.10 SEL-C605A Cable

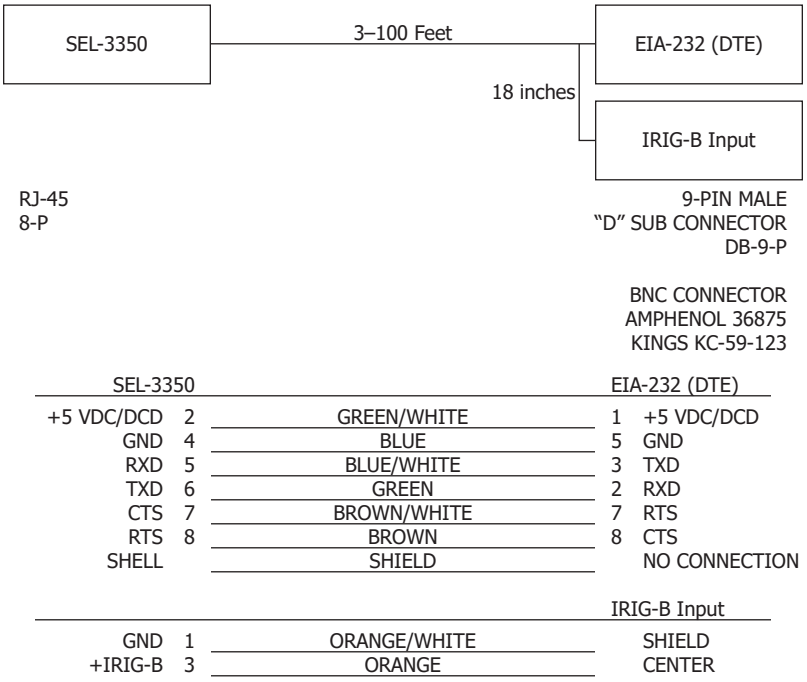

Figure 3.11 SEL-C659 Cable

EIA-232 and EIA-422/485 Modes

Each serial port can be configured in software settings to use either EIA-232 or EIA-422/485 signaling mode. By default, all serial ports are set to EIA-232 mode, which uses single-ended signaling for point-to-point communication to standard serial devices over a relatively short distance.

EIA-422/485 mode uses differential signaling for point-to-point or multidrop communication to compatible devices over longer distances. The SEL-3350 supports both two-wire and four-wire communications in EIA-422/485 mode. For two-wire communication in EIA-422/485 mode, enable the EIA-485 Mode and the Half Duplex software settings, and connect one wire to both the –RXD

and –TXD pins, and the other wire to both the +TXD and +RXD pins. When using EIA-422/485 mode, the transmitter is controlled either by software via the RTS signal or automatically by enabling the Send Data Control (SDC) mode setting.

IRIG-B Time Distribution

The SEL-3350 can distribute IRIG-B time data from all serial ports for precise time synchronization of connected devices. See *IRIG-B Input/Output on page 54* for more information.

+5 Vdc Port Power

Each serial port can be configured in software settings to provide +5 Vdc port power to simplify cabling and eliminate external power supplies for devices such as modems and fiber-optic transceivers. The SEL-3350 can provide a maximum of 500 mA (2.5 W) of total combined power to serial ports 1–16, and 1000 mA (5 W) to serial ports 17–48.

Status Indicators

The serial ports each have two LEDs that indicate when data are transmitted and received and can be used to identify the port. The right (TX) LED illuminates green when the port is transmitting data. The left (RX) LED illuminates red when the port is receiving data. The serial port LEDs work in unison with the front-panel serial status LEDs to provide quick visual communication status from any position.

Identify Port

The Identify Port feature in the system software allows you to correlate each logical serial port with each physical serial port. When Identify Port is enabled, the TX and RX LEDs on the serial port will flash repeatedly in unison. The LEDs will stop flashing when you disable Identify Port.

Loopback

When the Loopback feature is enabled via software settings, the serial port acts as a two-sided data mirror. All data and handshaking signals (RTS/CTS and DTR/DSR) received by the serial port, either from software or from the physical serial port, are mirrored back to the source. No data pass through from software to the physical port or vice versa. Use the Loopback feature to test the data path through all physical communications media from the remote device to the SEL-3350 serial port or to test the data path from software through any intermediary software or device drivers to the serial port.

Bit-Mode Operation

The synchronous bit-mode feature enables communication that uses bit-oriented protocols, such as CDC Type II or Conitel 2020. This feature is enabled via the software application, by specifying zero data bits in the serial port communications parameters instead of the normal 5–8 data bits for standard asynchronous mode. Thus, it is only supported by software applications specifically made to support this feature.

Under normal serial port operation, the serial port controller processes start, stop, and parity bits with each byte of data that is sent or received by the software application. When synchronous bit mode is enabled, the serial port controller no longer processes start, stop, and parity bits. Instead, it simply transmits and receives the raw byte stream to and from the software application.

Bit mode does not use a separate clock line between devices, so it is not a true synchronous mode of operation. Instead, the receiver clock is synchronized on bit edge transitions that occur during data transmission. Communications protocols made to use bit mode are designed such that edge transitions are guaranteed to happen frequently enough during a transmission to maintain synchronization. Serial port controllers that are designed for bit-mode operation have a high-precision clock generator to avoid loss of synchronization.

Cabling Guidelines

The following list provides additional rules and practices you should follow for successful communication when using serial communications devices and cables:

- To meet IEC 60255-26 surge requirements in some applications, cable length must not exceed 10 m (33 ft). See *Specifications on page 11* for details.
- Keep the length of the communications cables as short as possible to minimize communications circuit interference and to minimize the magnitude of hazardous ground potential differences that can develop during abnormal power system conditions.
- Always use shielded RJ45 serial cables that are grounded at both ends.
- Always use modems or fiber optics for communication over long distances and to provide isolation from ground potential differences between device locations.
- Always route communications cables away from power and control circuits. Switching spikes and surges in power and control circuits can cause noise in the communications circuits if not adequately separated.
- In general, use the lowest data rate that provides adequate data transfer throughput. Lower-speed communication is less susceptible to interference and will transmit greater distances over the same medium than communication at higher speeds.
- For EIA-422/485 communication, use termination resistors across the TXD and RXD pairs (from +TXD to –TXD and from +RXD to –RXD). Without termination resistors, reflections or fast driver edges can corrupt data. The value of the resistor should be equal to the cable characteristic impedance, typically 120 Ω for twisted pairs. Maximum bus length cannot be specified because it varies with cable and device characteristics as well as with data rate.

IRIG-B Input/Output

The SEL-3350 can receive and distribute IRIG-B time data for precise time synchronization of connected devices. Use the IRIG-B input to synchronize the SEL-3350 system clock and serially connected devices to a GPS clock or other precise time source. The SEL-3350 can also generate IRIG-B directly from its system clock, enabling all connected devices to be synchronized to the SEL-3350, which may be synchronized to an NTP or PTP server over Ethernet.

NOTE
For instructions on any of the software-configurable IRIG-B port settings or features, see Section 6: System Software and Settings.

NOTE
SEL-3350 IRIG-B004 control bits comply with IEEE C37.118.1-2011 (reverse compatible with IRIG-B000 and IEEE C37.118-2005).

IRIG-B Input

The SEL-3350 can receive a single IRIG-B input on the **IRIG-B IN** BNC connector. The SEL-3350 accepts a demodulated (also referred to as unmodulated) IRIG-B004 and IRIG-B002 input with either EVEN or ODD parity. The IRIG-B002 time-code format is binary-coded decimal (BCD) time code (HH,MM,SS,DDD)—this time-code format is "regular" IRIG-B. The IRIG-B004 time-code formats consist of BCD time code (HH,MM,SS,DDD), plus straight binary seconds (SBS) of the day (0–86400 s), and control bits that depend on user applications. The SEL-3350 IRIG-B004 control bits comply with IEEE C37.118.1-2011 (reverse compatible with IRIG-B000 and IEEE C37.118-2005).

IRIG-B Output

The SEL-3350 can provide a demodulated IRIG-B output on the **IRIG-B OUT** BNC connector and on any of the serial ports. The output format is always IRIG-B004 with IEEE C37.118.1-2011 control bits (reverse compatible with IRIG-B000 and IEEE C37.118-2005) and EVEN parity, regardless of the time source format. If a valid IRIG-B input is present, the outputs will provide time synchronized to the input with very high precision (±100 ns typical, ±1000 ns maximum separation). If no IRIG-B input signal is present, the outputs will provide time from the SEL-3350 system clock, which may be synchronized to an NTP or PTP server over Ethernet.

To determine how many devices an IRIG-B output is able to synchronize, a parallel resistance calculation is required using the input resistance of all devices connected to the output (including the termination resistor, if present). *Specifications on page 11* provides the output drive capacity of each SEL-3350 IRIG-B output. For reliable synchronization, the calculated parallel resistance of all connected devices must be less than the output drive capacity resistance.

For example, many SEL relays have an IRIG-B input resistance of approximately 2,500 ohms. If the BNC IRIG-B output supports an output drive capacity resistance of 25 ohms, this allows approximately 20 SEL relays to be connected in parallel, with a 50-ohm termination resistor on the farthest device. For each serial port IRIG-B output, if the drive resistance capability is 1,000 ohms, this allows 2 SEL relays to be connected in parallel.

When connecting devices to the BNC IRIG-B output, install a 50-ohm termination resistor on the farthest device if the calculated parallel resistance is greater than 75 ohms. The maximum total cable length for IRIG-B distribution is 40 m (131.2 ft) for RJ45 serial cables and 140 m (459.3 ft) for coaxial BNC cables.

NOTE
If the host system enters a low-power state (the Sleep or Hibernate state, for example), it will stop servicing the SEL Time devices, causing the hardware clocks and IRIG-B outputs to desynchronize (even if an IRIG-B input is connected). Upon coming out of the low-power state, the hardware clocks and IRIG-B outputs will re-synchronize.

Contact Inputs and Outputs

You can use the SEL-3350 contact inputs and outputs to monitor and control external devices by using hard-wired control signals. Contact inputs and outputs can be controlled through the SEL-3350 system software such as the SEL RTAC operating system or the **SEL Management Interface** in Windows and Linux operating systems. The SEL-3350 includes one contact input (IN101) and one contact output (OUT101) as standard equipment. Optionally, the 3U chassis configuration can include a Contact I/O expansion board that provides 24 additional contact inputs (IN201–IN224) and 8 additional contact outputs (OUT201–OUT208). *Figure 3.12* shows the terminal locations for IN101 and OUT101 and *Table 3.3* provides more detail.

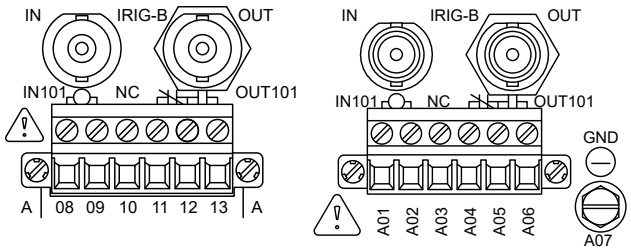

Figure 3.12 IN101 and OUT101 Terminal Designations on 1U (left) and 3U (right) Chassis

Table 3.3 IN101 and OUT101 Terminal Connections

1U Terminal	3U Terminal	Description
A08	A01	IN101
A09	A02	IN101
A10	A03	Not Connected
A11	A04	OUT101 (Normally Closed)

1U Terminal	3U Terminal	Description
A12	A05	OUT101 Common
A13	A06	OUT101 (Normally Open)

Before you connect any device to the contact inputs and outputs, ensure that the device you are connecting does not exceed the ratings for the input or output. See *Rear Panel on page 30* for important safety information on the contact inputs and outputs, and *Contact Inputs and Outputs on page 55* for full ratings.

NOTE
For information on any of the software-configurable contact input and output settings or features, see Section 6: System Software and Settings.

Universal Contact Input IN101

This universal contact input provides a range of features and functionality that is not present on standard contact inputs. Through software configuration, the input can be used with a wide range of ac and dc control input signals. The input can also provide an rms voltage measurement to support applications like battery monitoring. Use the input for remote reset or power control by enabling the **IN101** Lamp Test Button system jumper and configuring the Lamp Test Button Behavior setting in the BIOS setup.

This input is high-impedance (current limiting) and not polarity sensitive, so ac and dc sources can be directly connected to the terminals in any direction and the voltage measured by the input will always be a positive value. See *Figure 3.12* and *Table 3.3* for the terminal locations for **IN101**.

Configure the contact input to respond to ac or dc control signals by setting the pickup and dropout levels (volts) and delays (milliseconds). The contact input state becomes activated when the voltage applied to the input is greater than the pickup level for the duration of the pickup delay, and it becomes de-activated when the voltage applied is below the dropout level for the duration of the dropout delay.

The **IN101** contact input uses a default configuration every time the SEL-3350 starts up or reboots. The default configuration supports 125 Vdc control signals, with a 105 V pickup level, 75 V dropout level, and 2 ms pickup and dropout delays. If a different configuration is required, the system software or application must configure **IN101** on each startup.

The pickup level must be set to a value lower than the control signal voltage applied to the input. Typically, a pickup level of 70–80 percent of the rated/nominal control signal voltage is used in order to provide immunity to electrical noise and voltage drop. The dropout level should be less than 90 percent of the pickup level to provide adequate hysteresis, typically 50–60 percent of the rated/nominal control signal voltage. A pickup and dropout delay of at least 2 ms (8 ms at <48 V) is required for protection-level EMI and EMC performance; longer delays can be configured based on application needs.

Example 1, AC Control Signal. Because ac voltage cycles high and low every cycle, and because **IN101** is not polarity sensitive, the contact input can detect a pickup and dropout twice every ac cycle if the delays are configured incorrectly. The pickup delay must be less than the time

period that the ac waveform is above the pickup level, and the dropout delay must be greater than the time period that the ac waveform is below the dropout level. A valid configuration for a 60 Hz, 120 Vac signal could be an 85 V pickup level, 50 V dropout level, 2 ms pickup delay, and 8 ms dropout delay. Note that some ac power sources, like dc-to-ac inverters and uninterruptable power supplies (UPS), may produce a modified sine wave that could affect the level and delay requirements when used as a control signal for IN101.

Example 2, Battery Monitor. IN101 to monitor the voltage from a battery bank to determine the state of charge. The input provides an accurate rms voltage measurement (1 s filter) that can be monitored through the system software. For this application, the pickup levels and delays do not need to be configured because the activated state of the contact input is not of interest. Instead, the system software can directly monitor the input voltage to detect when the battery is fully charged, discharging, or critically low.

Example 3, Remote Reset or Power Control. Some installations have a supervisory control or watchdog device that monitors and controls the running state of other devices. If the supervisor detects that a device is not operating correctly, it sends a reset signal to attempt to restore the device to a known good state. By enabling the IN101 Lamp Test Button system jumper and configuring the Lamp Test Button Behavior setting in the BIOS setup, you can shut down or reset the SEL-3350 by activating IN101. When you set the Lamp Test Button Behavior setting to Power, activating IN101 sends a soft power button press to the operating system. The operating system may or may not respond to this, depending on how the operating system is configured to handle a power button press. When you set the Lamp Test Button Behavior setting to Reset, activating IN101 sends a hard reset command to the CPU, forcing an instantaneous reset of the SEL-3350. You must properly configure the input thresholds and delays for the control signal to activate the input. Note that this function only works when the SEL-3350 is in a running state; this will not function when the SEL-3350 is in a shutdown state, such as after a soft operating system shutdown.

Contact Inputs IN201–IN224

Contact inputs IN201–IN224 are optional and only available with the 3U chassis. Through software configuration, these inputs can be used with a wide range of ac and dc control input signals. These inputs are high-impedance (current limiting) and not polarity-sensitive, so ac and dc sources can be directly connected to the terminals in any direction. Inputs IN201–IN203 and IN213–IN215 each have two discrete terminal connections. Input groups IN204–IN212 and IN216–IN224 each share a common return terminal, so they must use a common ground or voltage source.

Configure each contact input to respond to ac or dc control signals by setting the nominal voltage level (volts) and type (ac or dc). The pickup and dropout voltage levels for each nominal voltage setting are listed in *Specifications on page 11*. The contact input state becomes activated when the voltage applied to the input is greater than the pickup level for the duration of the pickup delay, and it becomes deactivated when the voltage applied is lower than the dropout level for the duration of the dropout delay.

These contact inputs use a default configuration every time the SEL-3350 starts up or reboots. The default configuration is set for 24 Vac control signals. If a different configuration is required, the system software or application must configure the inputs on each startup.

Connecting a signal source that does not match the configured nominal voltage will not damage the input, but it may prevent correct pickup and dropout detection and noise rejection. For example, connecting an ac signal to a contact input configured for dc signals may cause the input to rapidly toggle with each ac cycle.

Contact Outputs

Refer to *Section 1: Introduction and Specifications* for contact output ratings. The OUT101 output uses a Form C break-before-make dry contact that can be wired as either normally closed or normally open. See *Figure 3.12* and *Table 3.3* for the terminal locations for OUT101. The OUT201–OUT208 outputs are optional (3U chassis only) and use a Form A dry contact. OUT201–OUT204 are fast hybrid contact outputs, while OUT205–OUT208 are standard relay-type contact outputs.

When connecting devices or loads to contact outputs, keep in mind they may have both resistive and inductive loading characteristics. If an inductive load is connected, for example a motor or trip coil, when the contact output opens, it tries to interrupt the inductive current that wants to continue to flow (V = L di/dt). This causes a voltage spike that can turn into an arc. If the contact outputs bounce during the arc, they often weld closed. The SEL-3350 contact outputs have been designed, tested, and specified for this application so they do not weld closed, as long as the device current and inductive load do not exceed the specifications of the contact output. Note that the current ratings on standard contact outputs (OUT205–OUT208) are greatest for making (closing) and continuously carrying a load, while the breaking (opening) current rating is much lower because breaking high current can cause arcing that erodes the contacts. When switching higher current loads, use the Fast Hybrid contact outputs (OUT201–OUT204), as they have solid-state components that prevent arcing (see the Breaking Capacity (10,000 operations) per IEC 60255-27:2013 in *Specifications on page 11*).

The OUT101 contact output can be configured for two different functions. By default, this output is coupled to the status of the system alarm to provide a means for external devices to monitor the operational status of the SEL-3350. Decouple the contact output from the alarm by using the system software or a BIOS setting, allowing you to control the alarm and contact output independently. When using OUT101 in a decoupled configuration, it is recommended to set the OUT101/Alarm Coupled BIOS setting to **Disabled** so that the output is automatically decoupled during each system startup. Otherwise, the system software or application must decouple OUT101 on each startup before the system alarm is cleared in order to prevent unintended output state changes during system startup. For details regarding the system alarm function, see *System Alarm on page 59*.

System Alarm

The SEL-3350 system alarm is a status indicator for the overall operational health of the system. The state of the alarm is indicated by the front-panel **ALARM** LED. By default, the state of the system alarm controls the **OUT101** contact output; however, by using the OUT101/Alarm Coupled BIOS setting or system software, you can disable the **OUT101** alarm coupling and use the output for other purposes.

The default state of the system alarm is the activated state, both while the SEL-3350 is turned off and turned on. This means that the default de-energized state of the **OUT101** contact output is the alarmed state. The system software (such as the SEL Alarm Service, SEL RTAC operating system, or SEL Blueframe operating system) is responsible for controlling the system alarm, including clearing the alarm on startup once it has determined the system is in a good running state. If **OUT101** is coupled to the system alarm, clearing the alarm energizes the **OUT101** contact output. For details regarding the SEL Alarm Service, see *Section 6: System Software and Settings*.

Status Indicators

The contact inputs and outputs on the Contact I/O expansion board (**IN201**–**IN224** and **OUT201**–**OUT208**) each have one red LED on the SEL-3350 front-panel that indicate when each contact input and output is asserted. These LEDs provide quick visual indicators to help verify proper wiring and operation of the contact inputs and outputs.

Watchdog

The CPU used in the SEL-3350 has a built-in watchdog for automatic system recovery in the case of software or operating system failures. The watchdog works as a countdown timer that upon reaching zero, triggers a system reset. A service or driver in the operating system is responsible for periodically servicing the watchdog to delay the system reset. Under normal conditions, the operating system will schedule this service or driver to run periodically to prevent the watchdog from ever resetting the system. If the operating system or one of the applications is locked in a processing loop that prevents other processes from running normally, the watchdog timer will have time to reach zero and reset the SEL-3350. This reset allows the operating system and application software to attempt to restart and return to a good working state.

The initial state of the watchdog at system startup depends on the configuration of the Watchdog BIOS setting and the mainboard Watchdog Disable jumper (Jumper Position C). *Table 3.4* describes how these settings affect the watchdog on startup. For information on changing the BIOS settings and jumpers, see *System Jumpers on page 46* and *Main Menu on page 62*.

Table 3.4 Watchdog Settings

Watchdog BIOS Setting	Watchdog Jumper (System Jumper C)	Watchdog Behavior
Disabled (Default)	Not Installed (Default)	The watchdog is available but disarmed; it cannot cause a reset until it is armed by the operating system. In this state, the watchdog cannot reset the system if a lockup occurs during initial bootup.
Enabled	Not Installed	The watchdog is available and armed; it can cause a reset anytime if not serviced by the operating system. In this state, the watchdog can reset the system if a lockup occurs during bootup and normal runtime.
Enabled or Disabled	Installed	The watchdog is not available; the operating system cannot detect or arm the watchdog. In this state, the watchdog cannot ever reset the system.

Microsoft Windows and Server operating systems will detect and start servicing the watchdog automatically, no software or settings changes are required for the watchdog to function. Many Linux-based operating systems require the installation of a watchdog management package for the watchdog to function.

SECTION 4

BIOS Setup

Overview

NOTE

The SEL Blueframe and SEL RTAC operating systems may install a restricted BIOS to enhance system security. If the system has had one of these operating systems installed and pressing **<F2>** during startup does not grant access to BIOS Setup, then the restricted BIOS is installed, which does not provide a BIOS Setup interface. In this situation, if you require access to BIOS Setup, contact SEL for support.

The SEL-3350 contains an AMI UEFI-compliant BIOS with a setup utility to configure hardware, I/O, peripheral, and boot options and to check hardware status information. This section provides a brief description of the information and settings available in the BIOS setup. Detailed information about each setting is displayed on the BIOS setup main screen.

The factory-default BIOS configuration is optimal for most applications, so using the BIOS setup is typically not necessary. While it is usually safe to customize the BIOS settings to suit your application needs, it is possible to render the SEL-3350 inoperable with the wrong settings. If the system becomes inoperable after changing BIOS settings, refer to *Mainboard on page 37* to use the BIOS reset system jumper to reset the BIOS to its factory-default settings.

The BIOS setup supports access control by requiring password authentication before it can be accessed. Access control is disabled by default, allowing full read/write access to the BIOS setup without authentication. SEL recommends using the access control feature to prevent unauthorized access to the critical system settings in the BIOS. See *Security Menu on page 64* for information on how to enable and configure access control. If you cannot access the BIOS setup because of a forgotten password, access control can be disabled via the Password Disable mainboard jumper (see *System Jumpers on page 46*).

To enter the BIOS setup, connect a keyboard and monitor and apply power to the SEL-3350, then immediately press **<F2>** before the operating system boots up. The BIOS setup main screen will appear within a few seconds.

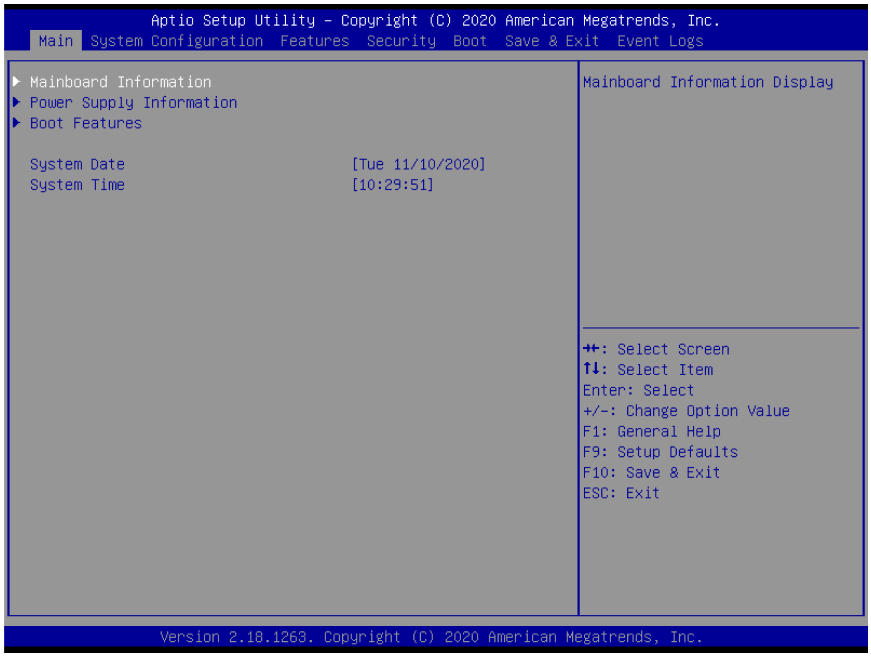

Figure 4.1 BIOS Setup Main Screen

Across the top of the BIOS setup main screen are top-level menu tabs. Under each menu tab are submenu items and setting values. Submenus are indicated by a triangle to the left of the item name. The right side of the screen displays item-specific help for the currently selected item. The bottom right of the screen displays the following information:

Left/Right Arrow	Navigate between top-level tabs
Up/Down Arrow	Select different settings and submenus in the current menu
<Enter>	Enter the selected setting or submenu
+/-	Change the selected setting value
<F1>	View the General Help screen
<F9>	Change all settings to factory defaults
<F10>	Save settings and exit setup
<Esc>	Exit a submenu

Main Menu

The `Main` menu tab is the first menu shown after entering the BIOS setup. The most commonly accessed BIOS features and options are accessible from this menu.

Boot Features

`Boot Features` contains settings related to startup behavior. The initial state of the **<Num Lock>** key, system I/O enable, OUT101/Alarm coupling, SEL Boot Check, and the system watchdog can be configured here. Disabling the watchdog can be useful during the initial operating system installation or when

troubleshooting. Note that the watchdog can be disabled by using either the BIOS watchdog setting or the system jumpers (see *System Jumpers on page 46* and *Watchdog on page 59*). Settings for the front-panel **LAMP TEST** button enable it to behave like a power or reset button. The default power state of the system can be configured to automatically start up when power is applied or to wait for the **LAMP TEST** button to be pushed.

Mainboard Information

Use the `Mainboard Information` submenu to view the BIOS and firmware versions, processor type and speed, installed memory module, and total system uptime and boot count.

System Date and Time

The System Date and System Time settings are used for the SEL-3350 internal real-time clock (RTC). These are the same date and time settings used by the operating system after startup. Date and time adjustments in the BIOS setup affect the date and time in the operating system and vice versa.

System Configuration Menu

The `System Configuration` menu tab contains submenus for configuring advanced chipset and peripheral features. These settings should typically be left at the default values unless a specific application requires changes to the settings. Changing settings in this menu can render the SEL-3350 inoperable.

Network Configuration

`Network Configuration` contains settings to enable or disable HTTP Boot and PxE Network Boot for the Ethernet ports.

SATA Configuration

`SATA Configuration` provides settings that enable or disable the SATA controller. A list of the installed SATA drives is also provided on this submenu.

Processor Configuration

From the `Processor Configuration` submenu, you can enable or disable advanced features built into the Intel Atom processor. These features include the number of active CPU cores, Intel SpeedStep, and CPU C-states.

USB Configuration

`USB Configuration` contains settings for the USB ports on the SEL-3350. The Mass Storage Driver Support setting enables or disables the UEFI BIOS ability to detect and enumerate USB Mass Storage Devices for features like booting from USB. USB Port Disable Override can be enabled to restrict access to each individual USB port. Do not disable all USB ports, or you will lose the ability to connect a keyboard to access the system.

Features Menu

The `Features` menu tab contains a submenu for configuring the built-in virtualization features of the Intel Atom processor.

Virtualization Configuration

From the `Virtualization Configuration` submenu, you can enable or disable advanced virtualization features of the Intel Atom processor, such as Intel Virtualization Technology (VT).

Security Menu

The `Security` menu tab contains submenus for configuring the BIOS access control, Secure Boot, and the Trusted Platform Module (TPM). SEL recommends using the access control feature to prevent unauthorized access to the critical system settings in the BIOS.

Secure Boot

Secure Boot is a security mechanism that ensures the SEL-3350 boots using only software that is trusted by the manufacturer or installer. From the `Secure Boot` submenu, you can enable or disable Secure Boot and also perform key management functions.

TPM Settings

From the `TPM Settings` submenu, you can enable or disable the TPM and perform actions such as clearing the TPM. The TPM action selected is executed upon saving and exiting the BIOS setup.

User Administration

From the `User Administration` submenu, you can set an administrator password to prevent unauthorized access to BIOS setup. When access control is disabled (i.e., no authentication is required), anyone can access BIOS setup and save settings changes. Select `Administrator Password` to set an administrator account password, which will enable access control. After enabling access control, you must save changes and exit the BIOS setup. To disable access control, edit the administrator password and set a blank (or empty) password.

Boot Menu

The `Boot` menu tab contains a prioritized list of all bootable devices currently installed on the SEL-3350. One configurable boot option is displayed for each bootable device detected during the last startup. You can move devices up or down in the list of boot options by using the <+> and <–> keys, or prevent booting from a device by disabling the boot option.

Save & Exit Menu

From the `Save & Exit` menu tab, you can save or discard settings changes, load factory-default settings, and exit the BIOS setup (with or without saving changes). You can also quickly save and exit the BIOS setup from any screen by pressing **<F10>**.

Event Logs Menu

From the `Event Logs` menu tab, you can access the SMBIOS Event Log, which is where the BIOS stores information that can be useful in troubleshooting boot problems. Use the `Change SMBIOS Event Log Settings` submenu to enable, disable, or clear the SMBIOS Event Log. Set the Log System Boot Event setting to **Enabled** to create a log entry every time the system boots.

BIOS Updates

BIOS updates can be downloaded from the SEL-3350 product page on the SEL website at selinc.com. These updates can typically be installed using tools within the operating system or by using UEFI shell tools; they will require a reboot for the update to complete. The BIOS update package will include detailed installation instructions in a README.txt file. Read these instructions carefully before performing the BIOS update.

Recovery Mode

If the SEL-3350 system BIOS becomes corrupted, the SEL-3350 may fail to boot and become completely nonfunctional. If this happens, the BIOS recovery mode may be able to restore the BIOS to a working state. Setting the Recovery Mode jumper (see *System Jumpers on page 46*) enables the BIOS recovery mode. When recovery mode is enabled and you apply power, the SEL-3350 searches all attached USB drives for a BIOS CAP file (included with BIOS updates), then uses the file to reprogram the SEL-3350 system BIOS. The USB drive must be formatted with the FAT16 or FAT32 file system, the CAP file must be named E3900.cap and located in the root directory of the USB drive (not in a folder or subdirectory), and the version of the CAP file must be the same version as the BIOS currently installed.

This page intentionally left blank

SECTION 5

Operating Systems and Software Installation

Overview

The initial installation of software onto the SEL-3350 can be accomplished several ways. This section describes the equipment and methods for installing the operating system and software.

Operating System Installation

NOTE
The SEL Blueframe and SEL RTAC operating systems may install a restricted BIOS to enhance system security. If the system has had one of these operating systems installed and pressing **<F2>** during startup does not grant access to BIOS Setup, then the restricted BIOS is installed, which will not start non-SEL operating systems. In this situation, if you need to install a non-SEL OS, contact SEL for support.

To install the operating system, determine which 2.5-inch SATA drive you will use. You can order the SEL-3350 without any drives or with as many as two SATA drives. If you did not order SATA drives from the factory, see *SATA Drives on page 44* for details on installing your own SATA drives.

Disable Watchdog

You will need to ensure the watchdog is disabled to ensure the system does not restart during the installation process. If the watchdog has been enabled, the installation will be interrupted periodically by the watchdog resetting the system. After installing the operating system and drivers, you can enable the watchdog. See *Watchdog on page 59* for more information.

Boot Operating System Installation

USB Storage Device

The following steps describe how to install an operating system from a USB-connected hard drive, flash drive, or DVD drive that contains the operating system installation files.

Step 1. Plug the USB drive into a USB port on the SEL-3350.

Step 2. Connect a monitor, USB keyboard, and USB mouse to the SEL-3350.

Step 3. Apply power to the SEL-3350 and immediately press **<F5>** to display the `Boot` menu.

Step 4. Select the USB device from the list of boot options and press **<Enter>** to continue.

The SEL-3350 will now try booting from the USB device to begin the operating system installation.

Preboot eXecution Environment

The following steps describe how to install an operating system from a network-connected Preboot eXecution Environment (PXE) server you have configured with the operating system installation files.

NOTE
To use this method, you must first set the PXE Network Boot setting in the BIOS setup to Enabled (see Network Configuration on page 63).

Step 1. Plug the network cable into an SEL-3350 Ethernet port. Plug the other end of the cable into the network switch configured to give you access to the PXE server.

Step 2. Apply power to the SEL-3350 and immediately press **<F5>** to display the boot menu.

Step 3. Select PCI LAN: from the list of boot options and press **<Enter>** to continue.

The SEL-3350 will now try booting from the PXE server to begin the operating system installation.

Driver Installation

Download the latest driver and system software installation files from the SEL-3350 product webpage at selinc.com. Save the files to a temporary directory on your SEL-3350 and run each installation file, following the instructions included with the installation files.

Software Installation

Start installing the software after you have successfully installed the operating system. There are many ways to install software. Two methods are described in this section.

USB Storage Device

Perform the following steps to install software using a USB storage device.

Step 1. Copy the software installation package onto a USB storage device.

Step 2. Remove the USB storage device from your computer.

Step 3. Apply power to the SEL-3350 and log in to the operating system.

Step 4. Insert the USB storage device into the SEL-3350.

Step 5. Navigate to the USB storage device and launch the software installation package.

Network Share

Perform the following steps to install software from a network.

Step 1. Connect a network cable to one of the SEL-3350 Ethernet ports.

Step 2. Ensure that you have a valid IP address, gateway, network mask, and proxy configured (if required). See *Operational Issues on page 115* or refer to your operating system manual if you need assistance with this.

Step 3. Place the installation software on a network share or network drive.

Step 4. Access the network share from the SEL-3350.

Step 5. Launch the installation software from the network share or copy the installation software to a directory on the SEL-3350 and launch the software installation package from there.

This page intentionally left blank

SECTION 6

System Software and Settings

Overview

This section describes system software and device settings that are available on supported Linux and Microsoft Windows operating systems. For systems using SEL RTAC or SEL Blueframe operating systems, refer to the SEL-5033 ACSELERATOR RTAC or SEL Blueframe instruction manuals instead of this section.

The SEL-3350 provides a suite of system configuration, monitoring, and control features through SEL SysMon software. SEL SysMon is comprised of the SEL Management Interface (SEL MI), the SEL Alarm Service, an SNMP Agent Extension, and support utilities. While common devices like Ethernet ports and serial UARTs are configured and accessed through standard user interfaces, the SEL MI enables programmatic access to SEL-3350 specialized features like the contact I/O, auxiliary LEDs, IRIG-B, hardware monitoring, and the system alarm through the Windows WMI and Linux SysFS interfaces. The SEL Alarm Service uses data from SEL MI and the operating system to control the system alarm. You can also use your own custom applications to monitor the system health and control the system alarm, contact I/O, and auxiliary LEDs by using the SEL MI and/or the support utilities.

SEL Alarm Service

The SEL Alarm Service is a Windows-based service that monitors system status information and controls the SEL-3350 system alarm. If any status information indicates that the SEL-3350 is out of normal operating range, the SEL Alarm Service activates the system alarm, illuminating the front-panel **ALARM** LED and de-activating the **OUT101** contact output (if the output is coupled to the system alarm).

The SEL Alarm Service creates Windows Event Logs for each alarm event, providing historical operational data for troubleshooting. To view the SEL Alarm Service event logs, open the Windows Event Viewer, expand the Applications and Services Logs category, and select the **SELAlarmService** event log.

Configuration

Tailor each alarm to your specific application needs by adjusting the alarm thresholds and alert types in the SEL Alarm Service configuration file. The configuration file is located in the SEL SysMon installation directory, typically at the location below, and can be modified in any text editor, for example Notepad.

C:\Program Files\SEL\SysMon\Alarm Service
\SEL_SysMon_Configuration.ini

Each alarm listed in the configuration file has two settings: the threshold value and the alerting type. Comments in the configuration file provide descriptions for these settings, including the data types and min/max value for each alarm threshold, and the alerting types available. The alerting types are as follows:

log_only. Event log is generated, system alarm is not affected.

pulsed. Event log is generated, system alarm is pulsed for one second.

latched. Event log is generated, system alarm is set until alert condition ends.

persistent. Event log is generated, system alarm is set until the alarm service is restarted.

none. No Event log or system alarm.

You can modify the configuration file at any time; however, configuration changes will not take effect until you restart the SEL Alarm Service. If the configuration file contains invalid settings or is otherwise corrupt or invalid, the SEL Alarm Service will create an event log entry and a text file named SEL_SysMon_Configuration_Error_Log.txt to provide details to troubleshoot the configuration file error. If a configuration error cannot be resolved, removing the configuration file from the installation folder and then restarting the SEL Alarm Service will generate a new default configuration file.

Alarm Data Sources

The SEL Alarm Service does not provide a means to continuously monitor the alarm status data that could be useful for testing and troubleshooting. Because the SEL Alarm Service pulls all status data through the Windows WMI interface (from both the SEL MI and standard Windows WMI classes), you can read or monitor the same data through Windows WMI using Windows Powershell or a simple script (see the following Windows Powershell example). *Table 6.1* lists all the alarms in the SEL Alarm Service and the WMI classes and properties associated with them.

NOTE
All classes listed are accessed through the **root\CIMV2** WMI namespace (the default namespace for most scripting languages).

Table 6.1 SEL Alarm Service Data Sources

Alarm Name	WMI Class Name	Class Instance	Property	Notes
CPU TEMPERATURE	Win32_PerfFormattedData_Counters _ThermalZoneInformation	Name = _TZ.CPU	Temperature	Celsius = Kelvin – 273
AMBIENT TEMPERATURE	Win32_PerfFormattedData_Counters _ThermalZoneInformation	Name = _TZ.MAMB	Temperature	Celsius = Kelvin – 273
RAM TEMPERATURE	Win32_PerfFormattedData_Counters _ThermalZoneInformation	Name = _TZ.DIMM	Temperature	Celsius = Kelvin – 273
CPU TOTAL UTILIZATION %	Win32_PerfFormattedData_ PerfOS_Processor	Name = _Total	PercentProcessorTime	Total for all CPU cores
RAM TOTAL UTILIZATION %	Win32_OperatingSystem	CreationClassName = Win32_OperatingSystem	TotalVisibleMemorySize FreePhysicalMemory	Utilization = (Total – Free) / Total
SYSTEM DRIVE USAGE %	Win32_LogicalDisk	DeviceId = C:	Size FreeSpace	Usage = (Size – FreeSpace) / Total

Alarm Name	WMI Class Name	Class Instance	Property	Notes
SMART DISK STATUS	Win32_DiskDrive	NA	Status	Monitors all drives
POWER SUPPLY [X] PRESENT	SEL_PowerSupply	DeviceId = [X]	Present	[X] is A or B
POWER SUPPLY [X] STATUS	SEL_PowerSupply	DeviceId = [X]	Good	[X] is A or B
TIME SYNCH STATUS	SEL_Time	DeviceId = [X]	External0Good	[X] is all time device names
OVERCURRENT [G]	SEL_Ports	DeviceId = [X]	OverCurrent	[G] is a port group, [X] is a port name
JUMPER STATE JMP[X]	SEL_Jumper	DeviceId = [X]	Present	[X] is A through H

The following is an example of Windows Powershell commands you can use to read status values:

Temperatures:

```
Get-CimInstance -ClassName Win32_PerfFormatted
Data_Counters_ThermalZoneInformation
```

SMART Disk Status:

```
Get-CimInstance -ClassName Win32_DiskDrive | Select-Object
-Property Status
```

Overcurrent:

```
Get-CimInstance -ClassName SEL_Ports | Select-Object -Property
DeviceID, Overcurrent
```

SNMP Agent Extension

Simple Network Management Protocol (SNMP) is a widely used protocol for monitoring the health of network-connected devices. On systems running Microsoft Windows operating systems, the SEL SysMon SNMP Agent Extension provides additional hardware diagnostic information through the standard Windows SNMP Service.

SNMP data are addressed using a Management Information Base (MIB) system. A MIB is a hierarchical tree data structure where an object is identified by either a name or an Object Identifier (OID). Find the files containing the SEL Sysmon SNMP MIB definitions at the following location:

C:\Program Files\SEL\doc\

To configure the SEL SysMon SNMP Agent Extension, use the four files found at the following location:

C:\Program Files\SEL\bin\

SNMPAgentOff.reg: Disables the SEL SysMon SNMP Agent Extension by removing the path to the Agent DLL from the registry. The Agent DLL will remain installed but not active.

SNMPAgentOn.reg: Enable the SEL SysMon SNMP Agent Extension by adding the path to the Agent DLL in the registry.

SNMPAgentLoggingOn.reg: Enable detailed logging by the SEL SysMon SNMP Agent Extension, which are written to the Windows Event Log under Applications and Services Logs > SEL > SNMP > 3300ExtensionAgent.

SNMPAgentLoggingOff.reg: Disable detailed logging by the SEL SysMon SNMP Agent Extension DLL.

To apply any of these configuration files, double-click the file to import the setting into the Windows registry. Windows will display a warning for the registry change, select **OK** to allow the change. Then, restart the Windows SNMP service (or restart the computer) for the setting change to take effect.

To access SNMP data, configure the Windows SNMP Service, which is beyond the scope of this manual. For assistance, see SEL application guide "Introducing SNMP and Using It to Monitor SEL Computers" (AG2018-19).

Support Utilities

NOTE
On some operating systems, it is necessary to run the support utilities with administrator privilege for the programs to work properly.

On systems running Microsoft Windows operating systems, support utilities are provided to enable users, applications, and scripts to easily control the system alarm, contact outputs, and front-panel status LEDs. An SEL Support Info Utility is also provided to quickly gather system information that can forwarded to support personnel to aide in troubleshooting problems. You can initiate these programs manually on-demand or through a script or software application that can run executables. The support utilities can be found in the following location:

C:\Program Files\SEL\bin\

SEL_Output.exe: Use the command-line utility to control the system alarm, contact outputs, and OUT101 Coupled setting. For usage instructions, run SEL_Output.exe with no arguments from a command prompt. Log messages, when specified, are written to the Windows Event Log under *Applications and Services Logs\SEL\Utility\Output \SEL-Output-Utility*.

SEL_LED.exe: Use the command-line utility to control the front-panel status LEDs (**ENABLED** and AUX 1–4). For usage instructions, run SEL_LED.exe with no arguments from a command prompt. Log messages, when specified, are written to the Windows Event Log under *Applications and Services Logs\SEL\Utility\LED\SEL-LED-Utility*.

sel_support_info_utility.ps1: Use this Windows Powershell script to gather important system information such as hardware configuration, firmware/software/driver versions, event logs, and Windows system information. The information is saved in a .zip file in the same folder as the script file, which you can send to support personnel to aid in

troubleshooting. To run the script, open the Windows Powershell application and type the full path and name of the script file, or in Windows Explorer, right-click on the file and select **Run with PowerShell**.

Ethernet Port Settings

Most Ethernet port settings are configured on a per-port basis, allowing each Ethernet port to have a unique configuration.

Windows Settings

To access the SEL-3350 Ethernet settings in Windows, open the **Windows Device Manager** and expand the **Network Adapters** device category. You will see a list of all network adapters in the system. Open the **Properties** window of the SEL-3350 network adapter being configured by double-clicking on the network adapter. The driver settings are listed in the Properties window on the Advanced tab.

The driver settings available on the Advanced tab are listed in *Table 6.2*. The settings changes will take effect immediately after you select **OK** to close the **Properties** window.

Table 6.2 Windows Settings

Name	Description	Options (Bold = defaults)
Checksum Offload	Enables hardware-accelerated TCP/IP and UDP/IP checksum verification.	**Enabled** Disabled
Interrupt Moderation Rate	Adjusts the relationship between packet latency and CPU burden: Set to Low for lower packet latency in exchange for higher CPU burden. Set to Medium to strike a balance between packet latency and CPU burden. Set to High to have a lower CPU burden in exchange for higher packet latency.	High Low **Medium**
LED Test	Continuously blinks the Link and Activity LEDs on the port, allowing you to identify the physical port for the network adapter.	Enabled **Disabled**
Maximum RBDs	Defines the received packet buffer size : Smaller buffers use less RAM but have a higher probability of packet loss. Larger buffers use more RAM but make losing packets less likely.	1024 **2048** 4096
Maximum TBDs	Defines the transmit packet buffer size : Smaller buffers use less RAM but have a higher probability of packet loss. Larger buffers use more RAM but make losing packets less likely.	1024 **2048** 4096
Network Address	Sets the MAC address for the network adapter. This is a volatile override; the address entered only takes effect when booted into this operating system. It does not permanently change the MAC address stored in the hardware. Enter the MAC address with no spaces or hyphens (i.e., AABBCCDDEEFF). Leave this value blank to use the hardware MAC address.	Any Valid MAC Address

Name	Description	Options (Bold = defaults)
Port Redundancy	Sets the Failover Mode for the port. If the primary port fails, it will fall back to the secondary port. If the secondary port fails, it falls back to the primary port.[a]	Enabled **Disabled**
Promiscuous Mode	Disables the network adapter's MAC filter, enabling it to receive all packets regardless of destination MAC address. This increases CPU burden, but enables monitoring of all network traffic received on the port.	Enabled **Disabled**
SFP Configuration	Sets the type of SFP module, speed, and negotiation method. The **Auto** setting is only valid for SFP modules provided by SEL; third-party SFP modules are not compatible with the **Auto** setting.	100 Mbps SERDES 100 Mbps SGMII 1000 Mbps SERDES 1000 Mbps SGMII **Auto**
Speed & Duplex	Sets the link speed and duplex of the port. **Auto** causes the port to autonegotiate the speed and duplex. For 1000 Mb (gigabit) connections, this must be set to **Auto**. This setting is ignored on fiber-optic connections because they operate at a fixed speed based on the SFP module used.	10 Mbps Full 10 Mbps Half 100 Mbps Full 100 Mbps Half **Auto**

[a] ETH1 and ETH2 can be set to a failover pair by enabling this setting on ETH1. ETH3 and ETH4 can be set to a failover pair by enabling this setting on ETH3.

Linux Settings

To access the SEL-3350 Ethernet settings in Linux, use the command-line syntax shown in *Table 6.3*. Ethtool is the suggested method for viewing and modifying the network settings in Linux. However, there are a few settings that require modifying specific configuration files.

All setting changes shown in *Table 6.3* are temporary and will revert to defaults after a restart. To make settings permanent, they must be set at start time through a SysVinit init script, systemd service file, or udev rules file depending on the setting. Some ethtool settings can be made permanent by using Network Manager.

Table 6.3 Linux Settings

Name	Description	Options (Bold = defaults)	Command Line Interface[a]
Checksum Offload	Enables hardware-accelerated TCP/IP and UDP/IP checksum verification.	Off **On**	**Ethtool Example** List features supported by the device: ethtool -k <ethX> Set a feature (checksum offload in this case): ethtool -K <ethX> rx off ethtool -K <ethX> tx off
Interrupt Moderation Rate	Adjusts the relationship between packet latency and CPU burden: Set to Low for lower packet latency in exchange for higher CPU burden. Set to Medium to strike a balance between packet latency and CPU burden. Set to High to have a lower CPU burden in exchange for higher packet latency.	0 **1** 2	/sys/class/net/<ethX>/sel_port/interrupt_moderation_file Reading prints the current mode, while writing to the file sets the mode. Modes: 0 = Low 1 = Medium 2 = High
LED Test	Continuously blinks the Link and Activity LEDs on the port, allowing you to identify the physical port for the network adapter.	N/A	**Ethtool Example** Blink ethX for 5 seconds: ethtool -p <ethX> 5

Name	Description	Options (Bold = defaults)	Command Line Interface[a]
Maximum RBDs	Defines the received packet buffer size: Smaller buffers use less RAM but have a higher probability of packet loss. Larger buffers use more RAM but make losing packets less likely.	1024 **2048** 4096	**Ethtool Example** View the current settings: ethtool -g <ethX> Set the size: ethtool -G <ethX> rx 1024 tx 1024
Maximum TBDs	Defines the transmit packet buffer size: Smaller buffers use less RAM but have a higher probability of packet loss. Larger buffers use more RAM but make losing packets less likely.	1024 **2048** 4096	**Ethtool Example** View the current settings: ethtool -g <ethX> Set the size: ethtool -G <ethX> rx 1024 tx 1024
Network Address	Sets the MAC address for the network adapter. This is a volatile override; the address entered only takes effect when booted into this operating system. It does not permanently change the MAC address stored in the hardware.	Any Valid MAC Address	ip link set <ethX> address 02:01:02:03:04:08[b]
Port Redundancy	Sets the Failover Mode for the port. If the primary port fails it will fall back to the secondary port or if secondary port fails it falls back to the primary port.	**Off** On	**Ethtool Example**[c] To turn it on: ethtool --set-priv-flags <ethX> Failover on To turn it off: ethtool --set-priv-flags <ethX> Failover off **NOTE:** If enabled, this will conflict with bonded interfaces.
Promiscuous Mode	Disables the network adapter's MAC filter, enabling it to receive all packets regardless of destination MAC address. This increases CPU burden, but it enables monitoring of all network traffic received on the port.	**<blank>** promisc	To turn on: ip link set <ethX> promisc on[b] To turn off: ip link set <ethX> promisc off[b]
SFP Configuration	Sets the type of SFP module, speed, and negotiation method. The **Auto** setting is only valid for SFP modules provided by SEL; third-party SFP modules are not compatible with the **Auto** setting.	**0** 1 2 3 4	/sys/class/net/<ethX>/sel_port/ Reading prints the current mode, while writing to the file sets the mode. sfp_configuration file: Modes: 0 = Auto 1 = 100 Mbps SERDES 2 = 1000 Mbps SERDES 3 = 100 Mbps SGMII 4 = 1000 Mbps SGMII SEL_SFPId file: Read-only—Reading it gives identifying information about an installed SFP module. SEL_SFPDiag file: Read-only—Reading it gives diagnostic information about an installed SFP module if the module supports diagnostics.

Name	Description	Options (Bold = defaults)	Command Line Interface[a]
Speed & Duplex	Sets the link speed and duplex of the port. **Auto** causes the port to autonegotiate the speed and duplex. For 1000 Mbps (Gigabit) connections, this must be set to **Auto**. This setting is ignored on fiber-optic connections because they operate at a fixed speed based on the SFP module used.	For speed: 10 100 For duplex: half full For autoneg: on off	**Ethtool Example** Set Settings: ethtool -s <ethX> speed 100 duplex half autoneg off ethtool -s <ethX> speed 10 duplex full autoneg off ethtool -s <ethX> autoneg on **NOTE:** When autoneg is set to on, it is possible to negotiate to 1000 Mbps.

[a] This is a generic example using <ethX> port where X can be any available Ethernet port.
[b] This example uses the ip command. Any network configuration application can be used (ifconfig or sysconfig are examples of other applications).
[c] ETH1 and ETH2 can be set to a failover pair by enabling this setting on ETH1. ETH3 and ETH4 can be set to a failover pair by enabling this setting on ETH3.

Serial Port Settings

The default configuration for all serial ports is to function as standard EIA-232 ports. Typical serial port settings such as data rate, data bits, stop bits, and handshaking are configured in the software applications that are using the serial ports. Additional serial port features such as EIA-422/485 mode and +5 Vdc port power are configurable by using software settings. All settings are configured on a per-port basis, allowing each serial port to have a unique configuration.

Windows Settings

To access the SEL-3350 serial port settings in Windows, open the **Windows Device Manager** and expand the Ports (**COM** and **LPT**) device category. You will see a list of all serial ports in the computer system. The SEL-3350 ports are named SEL(R) Communications Port (COM *y*), where *y* is the logical port number assigned in Windows. Open the **Properties** window of the serial port being configured by double-clicking the port. In the Properties window, on the Port Settings tab, there is an Identify Port button and an Advanced button. Select the **Advanced** button to open the **Advanced Settings** window.

The Advanced Settings window allows you to configure the settings listed in *Table 6.4*. The settings changes will take effect immediately after you select **OK** to close the Advanced Settings window.

Table 6.4 Serial Port Advanced Settings

Name	Function
Port Power	Enable +5 Vdc Port Power to power external equipment from the serial port.
EIA-485 Mode	Enables EIA-422/485 differential signaling to accommodate two-wire and four-wire communication schemes.
Half Duplex[a]	Enable when using two-wire EIA-422/485 communication. This blocks the receiver when transmitting data, preventing transmitted data from appearing in the receive buffer when the TxD and RxD pins are wired together.
SDC Mode[a]	Enables the Send Data Control (SDC) feature that automatically controls the transmitter. The transmitter is enabled immediately before sending data and disabled ~40 bit-times after transmission completes. Use this for two-wire communication in EIA-485 Mode when the software application is unable to properly control the transmitter via the RTS signal.

Name	Function
Loopback	Enables Loopback to test cabling and software configuration. See *Section 8: Troubleshooting*.
Receive FIFO	Sets how many bytes must be in the receive buffer before interrupting the CPU to indicate data are available. Higher values will result in decreased CPU burden, especially for data streams with large data payloads and/or high data rates. Lower values will decrease latency, improving software response time, but can cause excessive CPU burden at high data rates.
Transmit FIFO	Sets how many bytes remain in the transmit buffer before interrupting the CPU to indicate the buffer is ready for more data. Higher values help prevent gaps in the transmission of large or continuous data streams. Lower values may decrease CPU burden and benefit timing-sensitive applications.
COM Port Number	Sets the logical COM port number for the serial port. The SortPorts utility will automatically assign a COM port number for each SEL serial port when Windows boots up. To manually configure the COM port number, you must first disable the SortPorts utility in Windows Task Scheduler, then use this setting along with the Identify Port feature to change the COM port numbering to meet your application needs. See *Identifying Ethernet and Serial Ports on page 117* for more information on the SortPorts utility.

[a] Typically only enabled in conjunction with EIA-485 Mode.

Linux Settings

If your Linux operating system has a Python interpreter installed, a setting service installed by the driver package will automatically configure the serial port advanced settings during startup by using the configuration file located at /etc/serial_port_settings. The following advanced setting file example is provided in the comments in the serial_port_settings file, and a full list of advanced settings and values is provided in *Table 6.5*:

```
[default]
power             = on

[port 0]
power             = off
half-flow         = on


[port 2 3 4 5 ]
half-duplex       = on
mode              = RS485
send-data-control = auto


[port 6 7 8 9 ]
mode              = RS485
send-data-control = manual


[port 15 ]
loopback          = on
mode              = RS485
send-data-control = rts_on
```

Table 6.5 Linux Serial Port Advanced Settings

Name	Function
[default] and [port 0 1 2 …]	Lists the port numbers to which each block of settings will be applied. The [default] block defines default settings for all ports not specified elsewhere in the setting file. Each port # number directly correlates to the /dev/ttySEL# port number assigned by the operating system. See *Identifying Ethernet and Serial Ports on page 117* for more information on tty-SEL# port numbers.
power	Enables +5 Vdc Port Power to power external equipment from the serial port. The default is **off**; on = enabled, off = disabled.
mode	Enables either EIA-232 signaling or EIA-422/485 differential signaling to accommodate two-wire and four-wire communication schemes. The default is **RS232**; RS232 = EIA-232 mode, RS485 = EIA-485 mode.
half_duplex[a]	Enables the half_duplex feature when using two-wire EIA-422/485 communication. This blocks the receiver when transmitting data, preventing transmitted data from appearing in the receive buffer when the TxD and RxD pins are wired together. The default is **off**; on = enabled, off = disabled.
half_flow	Enables hardware half-flow control, which automatically asserts RTS immediately before sending data and then deasserts approximately 40 bit-times after the transmission completes. This setting is only applicable when in EIA-232 mode. The default is **off**; on = enabled, off = disabled.
loopback	Enable the Loopback feature to test cabling and software configuration. See *Serial Port Loopback on page 118* for more information. The default is **off**; on = enabled, off = disabled.
send-data-control[a]	Enables the Send Data Control (SDC) feature that automatically controls the transmitter. The transmitter is enabled immediately before sending data and disabled ~40 bit-times after transmission completes. Use this for two-wire communication in EIA-485 Mode when the software application is unable to properly control the transmitter via the RTS signal. The default is **manual** (SDC disabled); auto = SDC enabled, rts_on = transmitter always on.

[a] Typically only enabled in conjunction with EIA-485 Mode.

The setting service consists of a script file at either /sbin/sel-update-serial-ports or /usr/sbin/sel-update-serial-ports, which is run during startup to read the /etc/serial_port_settings file and update the serial port settings. This script can also be run from the command line to apply any changes to the /etc/serial_port_settings file without restarting. Root privileges are required to run the script.

On systems where a Python interpreter is not installed, the /etc/serial_port_settings file and /sbin/sel-update-serial-ports script cannot be used. Instead, you must configure the settings using the Multiuart class, see *SEL MI Classes in Linux SysFS on page 99*.

Contact Input and Output Settings

The contact I/O are configured and accessed through the Contact Input and Contact Output classes, described in the *SEL Management Interface on page 92*. You can also use the SEL_Output.exe support utility to control the contact output, see *Support Utilities on page 74*.

IRIG-B and Ethernet Time Synchronization

The SEL-3350 contains an SEL Time Controller that is a dedicated hardware clock that is used for precise time synchronization. This time controller performs decoding and encoding of the IRIG-B input and outputs and enables the SEL-3350 Ethernet ports to provide hardware time stamps to support PTP. This enables the SEL-3350 to receive high-precision time and distribute it to devices connected to the BNC and serial port IRIG-B outputs, as well as synchronize the SEL-3350 system clock to high-precision time sources.

The SEL Time Controller is separate from the main SEL-3350 system clock (referred to as the CMOS clock). System software is responsible for configuring the SEL Time Controller and synchronizing with the CMOS clock. This synchronization can happen in either direction; the SEL Time Controller can be the master when a precise source (IRIG-B or PTP) is available, or the CMOS clock can be the master when no precise source is available.

The block diagram in *Figure 6.1* provides a high-level picture of the data flow and synchronization between the clocks and different time sources in the system. Although *Figure 6.1* shows all time sources connected and active simultaneously. In a typical installation, only one source will be active. Regardless of how many time sources are active, you can only synchronize the hardware clock to one source at any given time. By default, the source selection of the SEL Time Controller is automatic, meaning it will select between sources, prioritizing IRIG-B first, then PTP, and lastly the System (CMOS) clock. You can set the source selection to a specific source (manually or via program/scripting) by using the SEL MI Time Class.

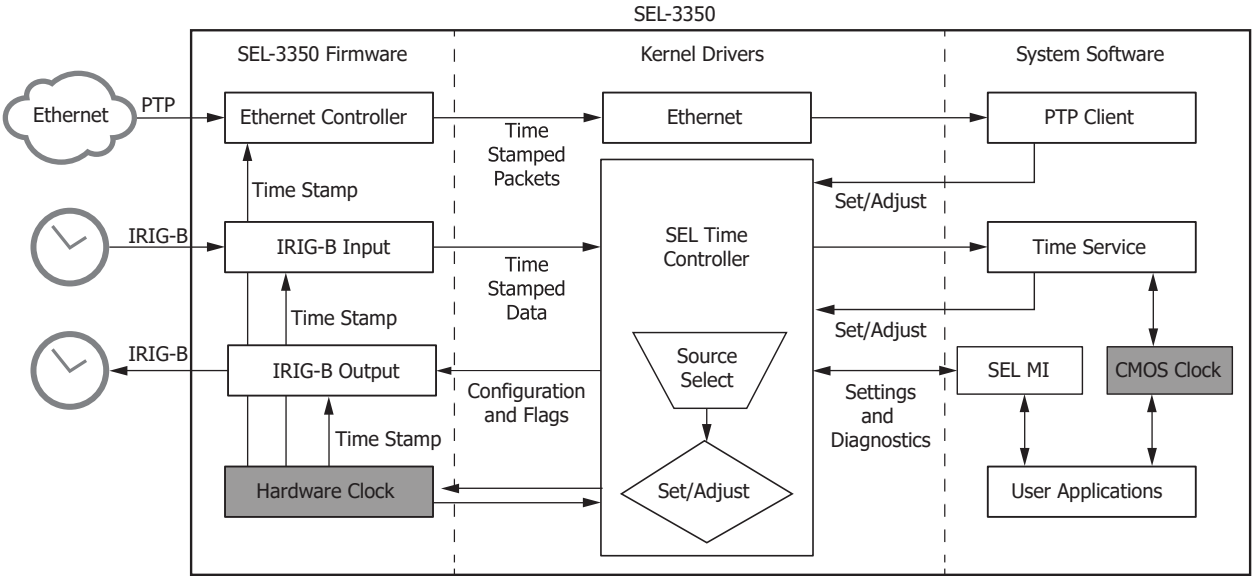

Figure 6.1 Time Synchronization Data Flow

In a typical configuration, the SEL Time Controller hardware clock is synchronized to a precise time source. The SEL-3350 IRIG-B outputs are generated from that same hardware clock, so they are synchronized to the source with very high precision (±100 ns typical, ±1000 ns maximum separation).

The CMOS clock is then synchronized to the SEL Time Controller hardware clock by the system software. If no precise time source is available, the system software synchronizes the SEL Time Controller hardware clock to the CMOS clock and the IRIG-B outputs are then generated from the hardware clock.

The exact behavior and performance of the CMOS clock synchronization depends on the configuration of the SEL Time Controller and the system software. In a typical configuration, the two clocks can be synchronized with lower precision (<10 ms typical, <100 ms maximum separation), but this can be adversely affected by an extremely high CPU workload and/or misconfiguration.

The SEL Time Controller can directly synchronize its hardware clock to IRIG-B sources without the assistance of system software. However, synchronization to PTP sources does require the assistance of system software to align the hardware time stamp with the PTP packet data and adjust the SEL Time Controller hardware clock accordingly. For both IRIG-B and hardware-time-stamped PTP sources, the hardware clock can be synchronized with very high precision (±100 ns typical, ±1000 ns maximum separation).

Some operating systems may not have the system software required for hardware-time-stamped PTP time synchronization but may still support software PTP synchronization of the CMOS clock. In this situation, the system operates as if no precise time source is available, where the system software synchronizes the SEL Time Controller hardware clock to the CMOS clock with lower precision (<10 ms typical, <100 ms maximum separation), and the IRIG-B outputs are then generated from the hardware clock.

Windows Configuration

NOTE
At this time, the SEL Time Controller does not support hardware-time-stamped PTP synchronization on Windows operating systems; the IRIG-B input is the only high-precision source available.

The default configuration enables the SEL Time Controller to automatically select the best available time source to synchronize its hardware clock, and the IRIG-B outputs are automatically enabled on system startup. The automatic source selection prioritizes high-precision sources and will fall back on the CMOS clock if none are available. The source selection can be changed from automatic to a specific source (manually or via program/scripting) by using the SEL MI Time Class. See *Time Class on page 96* for a complete list of diagnostics and settings available for the SEL Time Controller.

IRIG-B Time Zone and DST

The SEL Time Controller hardware clock is always set to UTC time. If the input is IRIG-B004 format, the time zone and DST offset are included in the IRIG-B data, so the SEL Time Controller can calculate UTC time directly from the IRIG data. If the input is IRIG-B002 format and is in local time instead of UTC, the SEL Time Controller must obtain the time zone and DST offset from the Windows Date and Time settings.

The Time class in the SEL MI contains a property named TimeReferenceIsUtc, which specifies if incoming IRIG-B002 is in UTC or local time (see *SEL Management Interface on page 92* for details on the SEL MI). This setting is set to TRUE by default, which indicates the incoming IRIG-B002

is in UTC time, and no time zone or DST offset will be applied when synchronizing the hardware clock. If the incoming IRIG is local time, change the TimeReferenceIsUtc property to **FALSE**. The SEL Time Controller will use the Windows Time Zone and DST settings to calculate the local time offset and adjust the hardware clock to UTC time. The following commands can be run from a Windows Powershell prompt to configure the TimeReferenceIsUtc property:

Incoming IRIG-B002 is UTC:

```
Set-CimInstance -Query 'Select * from SEL_Time where DeviceID like "Time 0"' -Property @{TimeReferenceIsUtc=$TRUE}
```

Incoming IRIG-B002 is local:

```
Set-CimInstance -Query 'Select * from SEL_Time where DeviceID like "Time 0"' -Property @{TimeReferenceIsUtc=$FALSE}
```

You can check the TimeReferenceIsUtc property value and other SEL Time Controller settings and diagnostics by running the following command from a Windows Powershell prompt:

```
Get-CimInstance -ClassName SEL_Time
```

CMOS Clock Synchronization

The SEL Time Controller relies on the Windows Time service to synchronize the CMOS clock to the hardware clock. The SEL Time Controller registers with the Windows Time service as a time provider, and the Windows Time service synchronizes the CMOS clock by using its own settings and algorithms. This means the Windows Time service must be enabled and running to synchronize the CMOS clock to the SEL Time Controller. The Windows Time service will only source time from the SEL Time Controller if a precise source (IRIG-B) is connected, otherwise it will use other configured sources (NTP or PTP for example) or allow the CMOS clock to free-run. To verify the Windows Time service is being synchronized to the SEL Time Controller, open an administrator command prompt and run the following command:

```
w32tm /query /status
```

The response to the previous command should indicate the source is SEL3390TimeProvider if an IRIG-B source is connected.

Ethernet (PTP and NTP) Synchronization

Precision Time Protocol (PTP) and Network Time Protocol (NTP) are both handled directly by the Windows Time service. As of Windows 10 1809 and Server 2019, the Windows Time service supports PTP by using any Ethernet adapter (regardless of hardware time-stamp support); previous versions of Windows do not support PTP. At this time, the SEL Time Controller does not support hardware timestamped PTP synchronization on Windows operating systems. When using the Windows Time service to synchronize to a PTP or NTP source, the SEL Time Controller operates as if no precise time source is available, where the SEL Time Controller hardware clock is synchronized to the CMOS clock with lower precision (<10 ms typical, <100 ms maximum separation) and the IRIG-B outputs are then generated from the hardware clock.

To configure the Windows NTP Client, follow these steps:

Step 1. Open Windows Settings and select **Time & Language**.

Step 2. On the left, select **Region**, then under Related settings, select **Additional date, time, & regional settings**.

Step 3. In the Clock and Region control panel, select **Date and Time**.

Step 4. In the Date and Time window, select the **Internet Time** tab, then select the **Change Settings** button.

Step 5. Check the box to synchronize with an internet time server, and type in the NTP server name or IP address.

Step 6. Select the **Update Now** button to test the connection to the NTP server.

To configure the Windows PTP Client, follow these steps to configure the Windows registry keys and values shown in *Table 6.6*:

Step 1. Select the Windows Start button, type **regedit**, then select **Registry Editor**.

Step 2. Navigate to the root key specified in *Table 6.6*. If the PTPClient key does not exist, right-click the **TimeProviders** key and select **New > Key** then type **PTPClient**.

Step 3. Set the registry values shown in *Table 6.6* by double-clicking the matching name and typing in the data specified. If the values do not exist, right-click in the white space in the right pane and select **New > [Type]**, where [Type] matches the type shown for that value in *Table 6.6*. Then type the value name for the new value, and set the value data.

Step 4. Once the values have been configured, restart the Windows Time service for the settings to take effect.

Table 6.6 Windows PTP Registry Configuration

Root Key	HKLM\SYSTEM\CurrentControlSet\Services\W32Time \TimeProviders\PtpClient	
Value Name	**Type**	**Data**
PtpMasters	REG_SZ (String Value)	[PTP server IP address]
Enabled	REG_DWORD	1
InputProvider	REG_DWORD	1
DllName	REG_SZ (String Value)	"c:\windows \system32\ptpprov.dll"
DelayPollInterval	REG_DWORD	0x3e80 (hexadecimal)
AnnounceInterval	REG_DWORD	0x0fa0 (hexadecimal)
EnableMulticastRx	REG_DWORD	0

The PtpMasters value can contain a comma-separated list of IP addresses for multiple PTP Masters. To use multicast (off by default), change the EnableMulticastRx value to 1.

To avoid conflicts, you may need to disable the NTP Client and VMIC Time Provider. To disable these, from the root key in *Table 6.6*, navigate to the TimeProviders key to find the NTPClient and VMICTimeProvider keys. For both keys, set their Enabled values to 0.

If the Windows Firewall is enabled, create new rules to allow the PTP client to communicate with the server by using the following steps:

Step 1. Select the **Windows Start** button, type **firewall**, then select **Windows Defender Firewall**.

Step 2. On the left, select **Advanced Settings**.

Step 3. On the left, right-click **Inbound Rules** and select **New Rule**.

Step 4. In the Rule Type wizard, select Port for the type of rule, then select **Next**.

Step 5. Select **UDP** and specify the ports **319** and **320**, then select **Next**.

Step 6. Select **Allow the connection**, then select **Next**.

Step 7. Select where you want the rule to apply, then select **Next**.

Step 8. Type a name for the rule, for example PTP Client Inbound, then select **Finish**.

Step 9. On the left, right-click **Outbound Rules** and select **New Rule**, then repeat *Step 4–Step 8* to create the outbound rule for the same UDP ports.

To verify the Windows Time service is being synchronized to the PTP server, open an administrator command prompt and run the following command:

w32tm /query /status

The response to the previous command should indicate the source is the IP address of the PTP server.

Linux Configuration

The SEL Time Controller is presented to Linux-based operating systems as a PTP device for easy integration. PTP devices are found in the /dev directory and are named /dev/ptp#, where # is a unique number for each device. The SEL-3350 only has one SEL Time Controller device, so it should always be the device ptp0. To configure the SEL Time Controller of the SEL-3350, you must first determine the seltime.# identifier associated with it by examining the PTP devices listed in /sys/class/ptp through the use of the following command:

ls -l /sys/class/ptp/ptp*

Figure 6.2 provides an example of the output of this command when run on a computer system with multiple SEL Time Controllers installed. You can find the seltime.# identifier in the listed path for each SEL PTP device.

```
[root@sel-3355-2 ~]# ls -l /sys/class/ptp/ptp*
lrwxrwxrwx. 1 root root 0 Feb 22 17:01 /sys/class/ptp/ptp0 -> ../../devices/pci0000:00/0000:00:01.0/0000:01:00.0/ptp/ptp0
lrwxrwxrwx. 1 root root 0 Feb 22 17:01 /sys/class/ptp/ptp1 -> ../../devices/pci0000:00/0000:00:1f.6/ptp/ptp1
lrwxrwxrwx. 1 root root 0 Feb 22 17:01 /sys/class/ptp/ptp2 -> ../../devices/pci0000:00/0000:00:01.1/0000:02:00.0/seltime.2.aut
o/ptp/ptp2
lrwxrwxrwx. 1 root root 0 Feb 22 17:01 /sys/class/ptp/ptp3 -> ../../devices/pci0000:00/0000:00:1c.4/0000:04:00.0/seltime.9.aut
o/ptp/ptp3
lrwxrwxrwx. 1 root root 0 Feb 22 17:01 /sys/class/ptp/ptp4 -> ../../devices/pci0000:00/0000:00:1d.0/0000:05:00.0/seltime.17.au
to/ptp/ptp4
```

Figure 6.2 Example Linux PTP Device List

Once you have determined the designations of the SEL-3350, use the SEL MI Time Class (see *SEL Management Interface on page 92*) to configure the source selection, IRIG-B DST and Time Zone, and other settings.

In installations where no external IRIG-B or PTP source is available, if the source_selection property in the SEL MI Time class is set to auto, set the auto_uses_system property to **1** to allow the SEL Time Controller to synchronize the hardware clock to the CMOS clock. In this configuration, ensure the CMOS clock is *not* being synchronized to the SEL Time Controller. Otherwise, a loop is created that causes the clocks to drift rapidly.

CMOS Clock Synchronization

NOTE
When the CMOS clock is being synchronized to the SEL Time Controller, ensure the auto_uses_system property in the SEL MI Time Class is set to 0 to prevent a loop that will cause the clocks to drift rapidly.

The SEL Time Controller requires a Linux time service to synchronize the CMOS clock to the hardware clock. The recommend time service is Chrony, which is available in all the supported releases of RHEL, RHEL derivatives, and Ubuntu. Follow these steps to configure Chrony to synchronize the CMOS clock to the SEL Time Controller:

Step 1. Install the Chrony package.

Step 2. Find the **chrony.conf** file. In most installations, it is located at /etc/chrony.conf.

Step 3. Edit the **chrony.conf** (require root privileges) with a text editor and add the following line to the end if the document:

```
refclock PHC /dev/ptp# trust
```

Where ptp# is the PTP device ID associated with the SEL-3350. The trust directive is optional. It instructs chrony to trust this source over all other sources that are not likewise marked trusted. It is useful if you have less accurate sources being used as backup and you do not want chrony averaging them into the system time (see *Time Class on page 96*).

Step 4. Save changes to **chrony.conf** and restart the Chrony service (requires root privileges).

On RHEL 7 or newer and Ubuntu:

systemctl restart chronyd

On RHEL 6:

service chronyd restart

In most cases, the SEL-3350 time device will be /dev/ptp0, so add **refclock PHC /dev/ptp0** to the chrony.conf file. Other parameters can be added to control the polling interval, etc. See the Chrony man page for more details.

Ethernet (PTP) Synchronization

In Linux operating systems, you can synchronize the SEL Time Controller hardware clock to a PTP source by using the LinuxPTP package. This package includes multiple components; the primary component used for synchronizing the hardware clock is ptp4l. When using the ptp4l to synchronize with a PTP

source, you can synchronize the SEL Time Controller hardware clock with the PTP source with very high precision (±100 ns typical, ±1000 ns maximum separation), and the IRIG-B outputs are then generated from the hardware clock, providing high precision PTP to IRIG-B conversion.

While ptp4l can be run in many different configurations, the examples provided in this section describe running ptp4l as an ordinary clock (a device that synchronizes with the PTP source and does not repeat or pass through the PTP data). In this mode, ptp4l synchronizes the SEL Time Controller hardware clock to the PTP source. To synchronize the CMOS clock to the SEL Time Controller, an additional application such as chrony is required (see *CMOS Clock Synchronization on page 86*).

Follow these steps to install the LinuxPTP package and configure ptp4l to synchronize the SEL Time Controller to a PTP source:

Step 1. Install the LinuxPTP package by using the command:

On Ubuntu:

sudo apt-get install linuxptp

On RHEL:

sudo dnf install linuxptp

Step 2. Find the ptp4l.conf configuration file:

On Ubuntu:

/etc/linuxptp/ptp4l.conf

On RHEL:

/etc/ptp4l.conf

Step 3. Edit **ptp4l.conf** with a text editor according to your needs as described in *Setting Up ptp4l.conf on page 89*.

Step 4. Edit the service startup file if needed. In many versions of Ubuntu and Red Hat the Network interface used by ptp4l is hard coded at run time using the '-i' command line option in the system startup file. In later versions of Ubuntu, the network interface was made dynamic by making it a Systemd template variable that can be specified when the service is enabled. Specifying the network interface on the command line like this overrides any network interface configuration in the ptp4l.conf file. If your distribution uses an interface different than the one you want to use or if you require a multi-interface configuration, then you will have to edit the service startup configuration. The following instructions assume that you are doing this on a distribution using Systemd as the services manager.

On Ubuntu:

The ptp4l service file will likely be in **/usr/lib/systemd/system/**, but this may change in future revisions. The file will likely be named either ptp4l.service or ptp4l@.service. The ptp4l.service version will have a hard coded interface. The ptp4l@.service version is a template that allows you to specify the interface when enabling the service (see *Step 5*). Depending on the setup desired, do one of the following:

a. Single network interface setup, non-template file.

   Copy /usr/lib/systemd/system/ptp4l.service to /etc/systemd/system/

   Edit /etc/systemd/system/ptp4l.service, change "-i eth0" to "-i <your NIC>" at the end of the line that starts with **ExecStart=**.

b. Single network interface setup, template file.

   Specify network interface when enabling in *Step 5*.

c. Multi-interface setup. The following removes the interface setup from the service startup file, which assumes that you are specifying the interfaces in your ptp4l.conf file as described in *Setting Up ptp4l.conf on page 89*.

   Copy /usr/lib/systemd/system/ptp4l.service (or ptp4l@.service) to /etc/systemd/system/. If copying ptp4l@.service rename the file to ptp4l.service.

   Edit /etc/systemd/system/ptp4l.service, removing "-i eth0" (or "-i %I") from the end of the line that starts with **ExecStart=**.

On RHEL:

a. Single network interface setup.

   Edit /etc/sysconfig/ptp4l/ptp4l, change "-i eth0" to "-i <your NIC>" at the end of the line that starts with **OPTIONS=**.

b. Multi-interface setup. The following removes the interface setup from the service startup file, which assumes that you are specifying the interfaces in your ptp4l.conf file as described in *Setting Up ptp4l.conf on page 89*.

   Edit /etc/sysconfig/ptp4l/ptp4l, removing "-i eth0" from the end of the line that starts with **OPTIONS=**.

Step 5. Configure ptp4l to run automatically on startup by using the relevant command.

For non-template startup:

sudo systemctl enable ptp4l.service

For template startup:

sudo systemctl enable ptp4l @<your NIC>.service

For example:

sudo systemctl enable ptp4l @eth4.service

Step 6. Restart the ptp4l service by using the relevant command:

sudo systemctl daemon-reload ptp4l.service

For non-template restarts:

sudo systemctl restart ptp4l.service

For template restarts:

sudo systemctl restart ptp4l @<your NIC>.service

For example:

sudo systemctl restart ptp4l @eth4.service

Setting Up ptp4l.conf

Table 6.7 lists the settings that are typically used in the ptp4l.conf configuration file for PTP synchronization of the SEL Time Controller. If you need additional information, refer to the online documentation for ptp4l and any documentation for the PTP source (master clock) device.

Table 6.7 ptp4l Configuration File Common Settings

Name	Description	Options (Bold = defaults)
boundary_clock_jbod	Allows ptp4l to run as a boundary clock (act as both a PTP client and server) that uses multiple network interfaces that are not synchronized to each other.	**0 (disabled)** 1 (enabled)
delay_mechanism	Selects the message propagation delay mechanism, which should be set to match the PTP source. Auto starts as E2E, then switches to P2P if available. Note for sources like the SEL-2488 serving c37.238 compatible PTP, set this to P2P.	Auto **E2E** P2P
network_transport	Selects type of network transport, which should be set to match the PTP source. UDPv4 is UDP over IPv4, UDPv6 is over IPv6, and L2 is IEEE 802.3 Layer 2 transport (not routable, local network only).	**UDPv4** UDPv6 L2
slaveOnly	Prevents ptp4l from running as a PTP master (source) clock.	**0 (disabled)** 1 (enabled)
time_stamping	Select the time stamping method to be used by ptp4l.	**hardware** software legacy
utc_offset	Sets the current offset between TAI and UTC, in seconds. This value is the total sum of all UTC leap seconds that occurred and must be updated for new leap seconds. This value must also match the utc_offset setting for the SEL Time Controller; see *Time Class on page 96*.	Any integer; **37** (as of March 2022)

The ptp4l.conf file contains a global section for settings that are to be applied to all network interfaces. This section is prefaced by the [global] section header. All settings immediately following the header, which are not included in an interface settings section, are considered global. A default set of global settings will be included with each ptp4l package.

Settings can be made specific to an individual interface by creating an interface settings section. Creating an interface settings section can also be a way of specifying the interfaces where ptp4l will receive time synchronization data. Interfaces specified on the command line (see *Step 4* of *Ethernet (PTP) Synchronization on page 86*), will be chosen as the time-synchronization

data source over interfaces specified by creating an interface settings section in ptp4l.conf. Settings in an interface settings section will be applied to the interface overriding the same setting in the global section for the specified interface.

An interface settings section is started by creating a new interface section header. Do this by entering the interface name in square brackets (for example [eth4]) on a new, blank line. All settings immediately below this section header will be applied to the interface named in the section header. For single-interface setups it is easiest to specify the interface on the command line and omit it in the ptp4l.conf file. For multi-interface setups, remove the interface from the command line (see *Step 4* of *Ethernet (PTP) Synchronization on page 86*) and add the desired interfaces as described in the relevant examples below.

The following examples describe some common ptp4l configurations and the relevant ptp4l.conf file contents. Note that these examples show only the settings that commonly need to be changed from the list in *Table 6.7*. ptp4l has more settings than are shown in *Table 6.7*. For a description of these settings, see the ptp4l or ptp4l.conf manual (man) pages included with your Linux distribution.

- **Default Profile, Single Interface**: The network interface eth0 is configured for the default PTP profile (using UDP packets and the P2P delay mechanism):

```
[global]
delay_mechanism Auto
network_transport UDPv4
utc_offset 37

[eth0]
```

- **Default Profile, Multiple Interfaces on One Multi-Port Ethernet Device**: The interfaces eth0 and eth1 are both on a single SEL multi-port Ethernet device. The default ptp4l behavior with multiple interfaces is to act as a boundary clock (receive PTP one interface and serve PTP on the other), so the slaveOnly setting is used to receive PTP on both interfaces, allowing for automated failover. The boundary_clock_jbod setting is not used because both eth0 and eth1 are on the same device and therefore both use the same SEL Time Controller hardware clock.

```
[global]
delay_mechanism Auto
network_transport UDPv4
utc_offset 37
slaveOnly 1

[eth0]

[eth1]
```

- **Default Profile, Multiple Interfaces on Separate Ethernet Devices**: This example is identical to the previous one except the interfaces eth0 and eth5 are on two separate SEL multiport Ethernet devices. The boundary_clock_jbod setting has been added because each SEL Ethernet device has its own SEL Time Controller hardware clock that would normally cause ptp4l to generate an error.

```
[global]
delay_mechanism Auto
network_transport UDPv4
utc_offset 37
slaveOnly 1
boundary_clock_jbod 1

[eth0]

[eth5]
```

- **Power Profile on One Interface, Default Profile on the Other**: To set the interface eth0 to the default profile and the interface eth5 to the IEEE C37.238-2017 power profile, set the network_transport setting to **L2** under the [eth5] group. Note that the L2 transport is not routable, so this configuration requires the PTP source to be on the same local network as eth5.

```
[global]
delay_mechanism Auto
network_transport UDPv4
utc_offset 37
slaveOnly 1
boundary_clock_jbod 1

[eth0]

[eth5]
network_transport L2
```

To quickly test the ptp4l.conf file, follow these steps:

Step 1. Stop ptp4l by using the command:

sudo systemctl stop ptp4l.service

Step 2. Run ptp4l from the command line, specifying the configuration file and using the -m flag to print the output to the console:

sudo ptp4l -f /etc/ptp4l.conf -m

Step 3. Press **Ctrl+C** to stop ptp4l.

Step 4. Make any additional configuration file changes necessary, repeating *Step 2* and *Step 3* to test the changes.

Step 5. Once you are satisfied with the configuration file, start the ptp4l service by using the command:

For non-template restarts:

sudo systemctl restart ptp4l.service

For template restarts:

sudo systemctl restart ptp4l@<your NIC>.service

For example:

sudo systemctl restart ptp4l@eth4.service

SEL Management Interface

The SEL MI provides a simple standardized method for custom applications and scripts to monitor and control the SEL-3350 hardware. On Microsoft Windows operating systems, the SEL MI is accessible through Windows WMI, while on Linux operating systems, the SEL MI is accessible through SysFS. Commonly used scripting languages, such as PowerShell or VBScript on Windows or Python on Linux, provide quick and simple methods to access WMI and SysFS, in addition to most compiled languages if that level of application complexity is required. While explaining how to write scripts and programs to access Windows WMI and Linux SysFS is outside the scope of this manual, some examples are given for Windows in *Examples on page 99*, and Linux in *Examples on page 109*, and a wealth of knowledge and examples can be found on the internet.

The SEL MI groups the SEL-3350 components into classes. Each SEL MI class contains a set of properties that are either read-only (status information) or read/write (settings and controls). The organization of these classes and properties differs between the Windows and Linux versions of the SEL MI.

SEL MI Classes in Windows WMI

Each individual SEL-3350 component exposed through the SEL MI is accessed as an instance of a Windows WMI class. *Table 6.8* provides a list of properties that are present in most of the SEL MI classes in Windows WMI.

Table 6.8 Common Class Properties

Property Name	Read/Write Access	Description
Caption	read	A short textual description of the instance
Description	read	A detailed textual description of the instance
DeviceID	read	An address or other identifying information to uniquely name the instance
ErrorDescription	read	A string supplying information about any errors
SystemName	read	The computer system's name

Details for each class and their associated properties are provided in the following sections. Some examples for accessing class data are given in *Examples on page 99*.

Data Provider Class

The SEL Data Provider is the library that provides the system management data to the SEL_ContactOutput, SEL_Jumper, SEL_LED, SEL_Ports, and SEL_PowerSupply classes. The Data Provider class provides properties to track the name and version of the SEL Data Provider library. The Data Provider class includes all common properties listed in *Table 6.8* and the additional properties listed in *Table 6.9*.

WMI NameSpace: **root\CIMV2**

WMI Class Name: **SEL_DataProvider**

Table 6.9 Data Provider Class Additional Properties

Property Name	Read/Write Access	Description
Manufacturer	read	The manufacturer of this provider
SystemHeight	read	Value to indicate the height of the system chassis
Version	read	The version of this Data Provider

Contact Input Class

The Contact Input class provides access to the settings and state of the SEL-3350 contact inputs. The contact input asserted/deasserted state is reported through the Activated property. Analog voltage measurement (where supported) is reported through the InputVoltage property. Configure the contact input by setting either the pickup and dropout voltage properties (IN101) or the NominalVoltage property (IN201 through IN224). The SupportedNominalVoltage property provides a list of supported NominalVoltage values for the contact input. The Contact Input class includes all common properties listed in *Table 6.8* and the additional properties listed in *Table 6.10*.

WMI NameSpace: **root\CIMV2**

WMI Class Name: **SEL_ContactInput**

Table 6.10 Contact Input Class Additional Properties

Property Name	Read/Write Access	Description
Activated	read	The contact input state: TRUE = asserted
DropoutDebounceTime	read/write	Dropout delay time in milliseconds (ms)
DropoutVoltageThreshold	read/write	Dropout voltage level in volts (V)
InputVoltage	read	Analog voltage measurement in millivolts (mV)
InstanceName	read	Hardware ID from the operating system
NominalVoltage	read/write	The nominal input voltage for the input
PickupDebounceTime	read/write	Pickup delay time in milliseconds (ms)
PickupVoltageThreshold	read/write	Pickup voltage level in volts (V)
SupportedNominalVoltage	read	A list of the NominalVoltage values that the input supports

Contact Output Class

The Contact Output class provides access to the state of the SEL-3350 contact outputs. The contact output asserted/deasserted state is provided through the Activated property. The Contact Output class includes all common properties listed in *Table 6.8* and the additional property listed in *Table 6.11*.

WMI NameSpace: **root\CIMV2**

WMI Class Name: **SEL_ContactOutput**

Table 6.11 Contact Output Class Additional Property

Property Name	Read/Write Access	Description
Activated	read/write	The contact output state: TRUE = energized

There are two special instances of contact outputs. The instance that has a DeviceID property value of Alarm provides access and control to the SEL-3350 system alarm state. The instance that has a DeviceID property value of Coupled provides access to the coupled setting for OUT101. When the Coupled Activated property is set to TRUE, the state of OUT101 is controlled by the Alarm instance, making it an alarm output. When the Coupled Activated property is set to FALSE, the state of OUT101 is controlled by the OUT101 instance, making it a general-purpose output.

Jumper Class

The Jumper class provides access to the state of the SEL-3350 mainboard jumpers. The jumper status is provided through the Present property. The Jumper class includes all common properties listed in *Table 6.8* and the additional property listed in *Table 6.12*.

WMI NameSpace: **root\CIMV2**

WMI Class Name: **SEL_Jumper**

Table 6.12 Jumper Class Additional Property

Property Name	Read/Write Access	Description
Present	read	Indicates if the jumper is installed: TRUE = installed

LED Class

The LED class provides access to the front-panel auxiliary and ENABLED LEDs. The LED illumination is controlled through the ActivationState property, and the LED color is controlled through the Color property. The LED class includes all common properties listed in *Table 6.8* and the additional properties listed in *Table 6.13*.

WMI NameSpace: **root\CIMV2**

WMI Class Name: **SEL_LED**

Table 6.13 LED Class Additional Properties

Property Name	Read/Write Access	Description
ActivationState	read/write	LED illumination: 2 = On, 3 = Blinking, 4 = Off
Color	read/write	LED color: 0 = Off, 1 = Green, 2 = Red
ControlMode	read/write	LED control type: 3 = Manual/software
DefaultActivationState	read	The default (boot-up) value for ActivationState
SupportedColors	read	List of colors this LED supports

Ports Class

The Ports class provides access to the overcurrent-protection status for the SEL-3350 USB, serial, and DISPLAYPORT ports. The overcurrent status is provided through the OverCurrent property. The Ports class includes all common properties listed in *Table 6.8* and the additional properties listed in *Table 6.14*.

WMI NameSpace: **root\CIMV2**

WMI Class Name: **SEL_Ports**

Table 6.14 Port Class Additional Properties

Property Name	Read/Write Access	Description
OverCurrent	read	Overcurrent protection status: TRUE = fault detected
Tag	read	Provides correlation with Win32_PortConnector class

Some ports are grouped to one overcurrent protection device, and thus an overcurrent on one of the ports will affect the status and operation of all in the group. For example both front USB ports (DeviceID values USB1 and USB2) use the same overcurrent protection device, so a short-circuit on one front USB port will cause both front USB ports to report an overcurrent and stop providing power to connected USB devices.

Power Supply Class

The Power Supply class provides access to the SEL-3350 power supply status. Power supply presence is reported by the Present property, and power supply health is reported by the Good property. The Power Supply class includes all common properties listed in *Table 6.8* and the additional properties listed in *Table 6.15*.

WMI NameSpace: **root\CIMV2**

WMI Class Name: **SEL_PowerSupply**

Table 6.15 Power Supply Class Additional Properties

Property Name	Read/Write Access	Description
Good	read	Power supply health: TRUE = healthy
Present	read	Power supply is detected: TRUE = present

Time Class

The Time class provides access to the SEL-3350 Time Controller to monitor the status of IRIG-B inputs and the hardware clock synchronization, configure the synchronization source, and enable or disable the IRIG-B outputs. Status indicators for IRIG-B inputs are separated into External, Internal, and Decoded groups. The External and Internal groups provide a PulseCounter property to indicate the presence of an electrical signal on the input, and Good and ParityGood properties to indicate the signal is a valid IRIG-B data stream. The Decoded group provides additional status indicators decoded from the selected source. The TimeQuality and ContinuousTimeQuality properties indicate the accuracy of time synchronization as reported by the source. The Time class includes all common properties listed in *Table 6.2* and the additional properties listed in *Table 6.16*.

WMI NameSpace: **root\CIMV2**

WMI Class Name: **SEL_Time**

Table 6.16 Time Class Additional Properties

Property Name	Read/Write Access	Description
DecodedContinuousTimeQuality	read	Continuous Time Quality indicator from the selected IRIG source's control flags, if present: Q = 0...7, inaccuracy < 10^(Q+1) nanoseconds (ns).
DecodedDSTActive	read	Daylight Saving Time Active indicator from the selected IRIG source's control flags, if present: TRUE = DST active.
DecodedDSTPending	read	Daylight Saving Time Pending indicator from the selected IRIG source's control flags, if present: TRUE = DST pending.
DecodedLeapSecondInsert	read	Leap Second Direction indicator from the selected IRIG source's control flags, if present: TRUE = insert second, FALSE = delete second.
DecodedLeapSecondPending	read	Leap Second Pending indicator from the selected IRIG source's control flags, if present: TRUE = leap second pending.
DecodedLocaltimeOffset	read	Local Time Zone Offset value from the selected IRIG source's control flags, if present, in hours and minutes ([–]HH:MM).
DecodedTimeQuality	read	Time Quality indicator from the selected IRIG source's control flags, if present: Q = 0...15, deviation from UTC < 10^(Q–1) nanoseconds (ns).
External0ContinuousTimeQuality	read	Continuous Time Quality indicator from the external IRIG input's control flags, if present: Q = 0...7, inaccuracy < 10^(Q+1) nanoseconds (ns).
External0Good	read	Overall status indicator for the external IRIG input: TRUE = healthy.
External0ParityGood	read	Parity status indicator for the external IRIG input: TRUE = good parity.
External0PulseCounter	read	Signal presence indicator for the external IRIG input: 32-bit counter that increments on each voltage pulse on the IRIG input.
External0TimeQuality	read	Time Quality indicator from the external IRIG input's control flags, if present: Q = 0...15, deviation from UTC < 10^(Q–1) nanoseconds (ns).

Property Name	Read/Write Access	Description
HardwareTime	read	The current time from the hardware clock, ISO-8601 format: YYYY-MM-DDTHH:MM:SSZ.
InternalContinuousTimeQuality[a]	read	Continuous Time Quality indicator from the internal IRIG input's control flags, if present: Q = 0...7, inaccuracy < 10^(Q+1) nanoseconds (ns).
InternalGood[a]	read	Overall status indicator for the internal IRIG input: TRUE = healthy.
InternalParityGood[a]	read	Parity status indicator for the internal IRIG input: TRUE = good parity.
InternalPulseCounter[a]	read	Signal presence indicator for internal IRIG input: 32-bit counter that increments on each voltage pulse on the IRIG input.
InternalTimeQuality[a]	read	Time Quality indicator from internal IRIG input's control flags, if present: Q = 0...15, deviation from UTC < 10^(Q–1) nanoseconds (ns).
NumSecondsSinceLastJump	read	Elapsed time since the last time jump in seconds.
NumTimeJumps	read	Count of times the hardware clock was adjusted by a significant time jump.
OutputEnabled	read/write	The IRIG Output state, default is **TRUE**: TRUE = enabled.
Source	read	Indicates which source the hardware clock is presently synchronizing to. See SourceSelection.
SourceSelection	read/write	Configures the source that the hardware clock should synchronize to. The default is **AUTO**: AUTO = automatically select source based on priority EXTERNAL-0 = external IRIG-B input (AUTO priority 1) INTERNAL = internal IRIG-B input (AUTO priority 2) SYSTEM = system (CMOS) clock (AUTO priority 3) Check SupportedSourceSelection for valid source names at runtime.
SupportedSourceSelection	read	Provides a comma-separated list of source names that are valid to use for SourceSelection, e.g., AUTO, EXTERNAL-0, INTERNAL, SYSTEM.
SyncError	read	The current synchronization error between the hardware clock and source in nanoseconds (ns).
Termination[a]	read/write	Configures the termination impedance for the external IRIG-B input, default is **FALSE**: TRUE = low impedance, FALSE = high impedance.
TimeReferenceIsUtc	read/write	If IRIG-B input is B002 (no extensions), this setting specifies if incoming IRIG-B is UTC or local time, default is **TRUE**: TRUE = UTC, FALSE = local.

[a] These properties are not applicable to the SEL-3350. They are used on other SEL Time devices.

SFP Module Diagnostics Class

The SFP Module Diagnostics class provides access to the diagnostic data from any of the SFP modules plugged into the Ethernet ports ETH 1 through ETH 4. Some properties are not supported on some SFP modules. The SFP Module Diagnostics class includes the Caption, Description, and DeviceID properties listed in *Table 6.8* and the additional properties listed in *Table 6.17*.

WMI NameSpace: **root\WMI**

WMI Class Name: **SEL_SFPDiag**

Table 6.17 SFP Module Diagnostics Class Additional Properties

Property Name	Read/Write Access	Description
Active	read	Device operational status; this value will always be TRUE
InstanceName	read	Hardware ID from the operating system
RxPower	read	Receiver optical power in nanowatts (nW)
SupplyVoltage	read	SFP module supply voltage in microvolts (µV)
Temperature	read	SFP module temperature in degrees Celsius (°C)
TxBiasCurrent	read	Transmit laser bias current in microamperes (µA)
TxPower	read	Transmit laser optical power in nanowatts (nW)

SFP Module Identification Class

The SFP Module Identification class provides access to the identification data from any SFP modules plugged into the Ethernet ports ETH 1 through ETH 4. Some properties are not supported on some SFP modules. The SFP Module Identification class includes the Caption, Description, and DeviceID properties listed in *Table 6.8* and the additional properties listed in *Table 6.18*.

WMI NameSpace: **root\WMI**

WMI Class Name: **SEL_SFPId**

Table 6.18 SFP Module Identification Class Additional Properties

Property Name	Read/Write Access	Description
Active	read	Device operational status; this value will always be TRUE
DateCode	read	Manufacturer's SFP module build date
InstanceName	read	Hardware ID from the operating system
Length50umOM2	read	Max length with 50 µ multimode OM2 fiber in meters (m)
Length50umOM3	read	Max length with 50 µ multimode OM3 fiber in meters (m)
Length62p5umOM1	read	Max length with 62.5 µ multimode OM1 fiber in meters (m)
LengthCopper	read	Max length with copper cable in meters (m)
LengthSingleMode	read	Max length with single-mode fiber in meters (m)
Manufacturer	read	Manufacturer's name
Part Number	read	Manufacturer's part number
SELPartNumber	read	SEL part number
SELSerialNumber	read	SEL serial number
SerialNumber	read	Manufacturer's serial number
Version	read	Manufacturer's version ID
Wavelength	read	Laser wavelength in nanometers (nm)

Examples

You can access Windows WMI from most programming environments and scripting languages. The following examples can be run in Windows Powershell by either typing the command into a Windows Powershell window or incorporating the commands into a Powershell script file. Note that you may have to run Powershell as an Administrator to access some classes or properties.

Display all property values for all instances of a class:

Get-CimInstance -NameSpace [namespace] -ClassName [class]

Example for LED class:

Get-CimInstance -NameSpace root\CIMV2 -ClassName SEL_LED

Display only specific property values for all instances of a class:

Get-CimInstance -NameSpace [namespace] -ClassName [class] | Select-Object -Property [property1], [property2], ...

Example for Port class overcurrent status:

Get-CimInstance -NameSpace root\CIMV2 -ClassName SEL_Ports | Select-Object -Property DeviceID, Overcurrent

Display all property values for a specific instance of a class:

Get-CimInstance -NameSpace [namespace] -Query "Select * from [class] where [Property] like '[value]'"

Example for LED class AUX1 status:

Get-CimInstance -NameSpace root\CIMV2 -Query "Select * from SEL_LED where DeviceID like 'AUX1'"

Set a property value for a specific instance of a class:

Set-CimInstance -NameSpace [namespace] -Query "Select * from [class] where [Property] like '[value]'" -Property @{[Property1]=[value1]; [Property2]=[value2]...}

Example for LED class AUX1 set to the color green:

Set-CimInstance -NameSpace root\CIMV2 -Query "Select * from SEL_LED where DeviceID like 'AUX1'" -Property @{Color=1}

Example for ContactOutput class OUT101 set to activated:

Set-CimInstance -NameSpace root\CIMV2 -Query "Select * from SEL_ContactOutput where DeviceID like 'OUT101'" -Property @{Activated=$TRUE}

SEL MI Classes in Linux SysFS

In the Linux SEL MI, each SEL-3350 component exposed through the SEL MI is accessed through Linux SysFS. Each SEL MI class consists of one or many SysFS files, allowing read and write access to status data and settings by using the same methods that are used to access plain text files. Details for each class and their associated properties are provided in the following sections.

Changes to SysFS file contents/settings take effect immediately but are not persistent; all SysFS files revert to default values on each startup. For settings to persist through a restart, you must run a configuration script on each startup. See *Examples on page 109* for assistance on modifying SysFS files and configuring startup scripts.

Contact Input Class

The Contact Input class provides access to the settings and state of the SEL-3350 contact inputs. The contact input asserted/deasserted state is reported through the Activated property. The analog voltage measurement (where supported) is reported through the InputVoltage property. Configure the input voltage by setting either the pickup and dropout voltage properties (IN101) or the NominalVoltage property (IN201 through IN224). The SupportedNominalVoltage property provides a list of supported NominalVoltage values for the contact input. The Contact Input class is the directory at the path listed below, with a subdirectory for each contact input, and each property listed in *Table 6.19* is a plain text file in that subdirectory that contains the property value.

Linux SysFS Path:

/sys/class/sel_contact_input/

Table 6.19 Contact Input Class Properties

Property Name	Read/Write Access	Description
activated	read	The contact input state: 1 = asserted
dropout_debounce_time	read/write	Dropout delay time in milliseconds (ms)
dropout_voltage_threshold	read/write	Dropout voltage level in volts (V)
input_voltage	read	Analog voltage measurement in millivolts (mV)
nominal_voltage	read/write	The nominal input voltage for the input
pickup_debounce_time	read/write	Pickup delay time in milliseconds (ms)
pickup_voltage_threshold	read/write	Pickup voltage level in volts (V)
supported_nominal_voltage	read	An array list of the NominalVoltage values that the input supports

Contact Output Class

The Contact Output class provides access to the state of the SEL-3350 contact outputs. The contact output asserted/deasserted state is provided through the Activated property. The Contact Output class is the directory at the path listed below, with a subdirectory for each contact output, and each property listed in *Table 6.20* is a plain text file in that subdirectory that contains the property value.

Linux SysFS Path:

/sys/class/sel_contact_output/

Table 6.20 Contact Output Class Property

Property Name	Read/Write Access	Description
activated	read/write	The contact output state: 1 = energized

General Purpose I/O Class

The General Purpose I/O (GPIO) class provides access to the SEL-3350 front-panel LEDs, system alarm, OUT101, mainboard jumpers, power supply status, port overcurrent status, and mainboard identification. Depending on the version of your Linux distribution, use one of the following two methods to access the GPIO class:

- On Redhat/CentOS 9, Ubuntu 22.04, SUSE 15, and newer versions (and derivatives with the same kernel versions), the GPIO class is accessed through the Linux gpiod package, which provides a standardized set of libraries and terminal commands to access system GPIO. The LED and power supply related GPIO class properties must be accessed through SysFS via the LED and Power Supply classes because those properties are always in use by those class libraries. Some example gpiod terminal commands are provided after *Table 6.21*. For additional information, see the online documentation for the Linux gpiod package.
- On Redhat/CentOS 8, Ubuntu 20.04, and older versions (and derivatives with the same kernel versions), the GPIO class is accessed through the SEL0003:00 device in SysFS, the path to which varies depending on the Linux variant and version. The following are example paths to the SysFS device, where each property is a subdirectory in the class directory, and the property value is in a plain text file named "value" in each subdirectory.

  Possible locations in SysFS of the SEL0003:00 device:

  /sys/devices/LNXSYSTM:00/LNXSYBUS:00/SEL0003:00/

  or

  /sys/devices/LNXSYSTM:00/device:00/SEL0003:00/

The GPIO class properties that have similar names have been consolidated to single table rows in *Table 6.21*, with the variation of property names indicated by the values in brackets. For example, AUX_LED_GRN[1–4] indicates that there are four instances of this property, with the first one having the name AUX_LED_GRN1.

Table 6.21 General Purpose I/O Class Properties

Property Name	Read/Write Access	Description
ALARM_STATE_USER	read/write[a]	The system Alarm state: 1 = alarmed
ATOM_DIAG_OK	read/write	Serial/Contact I/O output-enable: default 1 = enabled
AUX_LED_GRN[1–4]	read/write[a]	The auxiliary LED states: 1 = on (green)
AUX_LED_RED[1–4]	read/write[a]	The auxiliary LED states: 1 = on (red)
BOARD_ID_[0–3]	read	Mainboard 4-bit ID
BOARD_REV_ID_[0–3]	read	Mainboard 4-bit revision number
BP_DETECT_[0–1]	read	Backplane 2-bit ID
COM_PWR_FLT	read	COM1–COM16 port overcurrent status: 0 = fault detected
DEBUG_LED_[0–7]	read/write	Mainboard debug LED states: 1 = on
DP_PWR_FLT	read	DisplayPort overcurrent status: 0 = fault detected
ENABLE_STATE_USER	read/write[a]	Enabled LED state: 1 = on (green)

Property Name	Read/Write Access	Description
EXP_DIDO_DETECT	read	Expansion I/O board detect: 0 = present
EXP_SERIAL_DETECT	read	Expansion serial board detect: 0 = present
HW_FAIL_DETECT	read	General hardware fault status: 0 = fault detected
JMP_[A–H]	read	Mainboard jumper status: 0 = installed
OUT101_AS_ALARM	read/write	OUT101 controlled by system Alarm: 1 = enabled
OUT101_USER	read/write	OUT101 state: 1 = energized
PS_[A,B]_DETECT	read[a]	Power supply detect: 0 = present
PS_[A,B]_GOOD	read[a]	Power supply health: 0 = healthy
USB_[R,F]_PWR_FLT	read	USB port overcurrent status: 0 = fault detected

[a] On Redhat/CentOS 9, Ubuntu 22.04, SUSE 15, and newer versions, these properties must be accessed through SysFS via the LED and Power Supply classes.

Example gpiod commands (requires Redhat/CentOS 9, Ubuntu 22.04, SUSE 15, or newer versions):

List all GPIO chips and lines by using gpioinfo and piping to grep to filter out unnamed lines:

```
sudo gpioinfo | grep -vi unnamed
```

Find the chip and line number for the property name JMP_A:

```
sudo gpiofind JMP_A
```

Display the status of jumper JMP_A by using gpioget with the chip and line number of JMP_A:

```
sudo gpioget gpiochip0 50
```

Display the status of jumper JMP_A by using gpioget and gpiofind:

```
sudo gpioget $(sudo gpiofind JMP_A)
```

Set OUT101_AS_ALARM to decouple the alarm from OUT101 by using gpioset with the chip and line number of OUT101_AS_ALARM:

```
sudo gpioset gpiochip1 49=0
```

Pulse the OUT101 contact for 5 seconds by using gpioset and gpiofind:

```
sudo gpioset -m time -s 5 $(sudo gpiofind OUT101_USER)=1
```

Serial Expansion Board Overcurrent Class

The Serial Expansion Board Overcurrent (sel_b2094) class indicates when an overcurrent event happens on COM17–COM48. The overcurrent state is provided through the overcurrent property. The sel_b2094 class is the directory at the path listed below, and each property listed in *Table 6.22* is a plain text file in that directory that contains the property value.

Linux SysFS Path:

```
/sys/class/sel_b2094/
```

Table 6.22 Serial Expansion Board Overcurrent Class Property

Property Name	Read/Write Access	Description
overcurrent	read	COM17–COM48 overcurrent status: 0 = fault detected

LED Class

The LED class provides access to the front-panel **AUX** and **ENABLED** LEDs. This class is only supported in Redhat/CentOS 9 and Ubuntu 22.04 and newer (and derivatives with the same kernel versions); older distributions must use the General Purpose I/O class. The LED illumination is controlled through the brightness property, with any value greater than zero illuminating the LED. The LED class is the directory at the following path, with a subdirectory for each LED, and each property listed in *Table 6.23* is a plain text file in that subdirectory that contains the property value.

Linux SysFS Path:

/sys/class/leds/

Table 6.23 LED Class Property

Property Name	Read/Write Access	Description
brightness	read/write	The LED illumination state: 0 = off, 1 = on

Power Supply Class

The Power Supply class provides access to the SEL-3350 power supply status. This class is only supported in Redhat/CentOS 9 and Ubuntu 22.04 and newer (and derivatives with the same kernel versions); older distributions must use the General Purpose I/O class. Power supply presence is reported by the present property, active status is reported by the online property, and overall status is reported by the health property. The Power Supply class is the directory at the following path, with a subdirectory for each power supply, and each property listed in *Table 6.24* is a plain text file in that subdirectory that contains the property value.

Linux SysFS Path:

/sys/class/power_supply/

Table 6.24 Power Supply Class Properties

Property Name	Read/Write Access	Description
health	read	Power supply overall status: Good = present and online, Unspecified failure = present and offline, Unknown = not present
online	read	Power supply is active: 1 = online
present	read	Power supply is detected: 1 = present

Time Class

The Time class provides access to the SEL-3350 to monitor the status of IRIG-B inputs, the hardware clock synchronization, configure the synchronization source, configure time-zone offsets when necessary, and enable or disable the IRIG-B outputs.

Status indicators for IRIG-B inputs are separated into External, Internal, and Decoded groups. The External and Internal groups provide a _pulse_counter property to indicate the presence of an electrical signal on the input, and _good and _parity_good properties to indicate the signal is a valid IRIG-B data stream. The Decoded group provides additional status indicators decoded from the selected source. The _time_quality and _continuous_time_quality properties indicate the accuracy of time synchronization as reported by the source.

Settings for daylight-saving time (DST) and time zone offsets are provided for when this information cannot be decoded from the IRIG-B input, for example if the incoming signal is IRIG-B002 (no IEEE C37.118 extension data) or there is no IRIG-B input available. The DST settings are separated into input_dst_ and output_dst_ property groups, and time zone offset is configured through the _localtime properties.

The Time class for the SEL Time Controller is the directory at the path listed below, where seltime.# is in the PTP device description associated with the device (see *Linux Configuration on page 85*). Each property listed in *Table 6.25* is a plain text file in that directory that contains the property value.

Linux SysFS Path:

/sys/class/sel_time/seltime.#

Table 6.25 Time Class Properties

Property Name	Read/Write Access	Description
auto_uses_system	read/write	Allow the auto source_selection to select the system (CMOS) clock as a source. Only change the default value if the system (CMOS) clock is not configured to receive time from the SEL Time Controller. The default is **0**: 1 = allow auto to use system (CMOS) source, 0 = do not allow auto to use system (CMOS) source.
decoded_continuous_time_quality	read	Continuous Time Quality indicator from the selected IRIG source's control flags, if present: Q = 0...7, inaccuracy < 10^(Q + 1) nanoseconds (ns).
decoded_dst_active	read	Daylight Saving Time Active indicator from the selected IRIG source's control flags, if present: 1 = DST active.
decoded_dst_pending	read	Daylight Saving Time Pending indicator from the selected IRIG source's control flags, if present: 1 = DST pending.
decoded_leap_second_insert	read	Leap Second Direction indicator from the selected IRIG source's control flags, if present: 1 = insert second, 0 = delete second.
decoded_leap_second_pending	read	Leap Second Pending indicator from the selected IRIG source's control flags, if present: 1 = leap second pending.
decoded_localtime_offset	read	Local Time Zone Offset value from the selected IRIG source's control flags, if present, in hours and minutes ([–]HH:MM).
decoded_time_quality	read	Time Quality indicator from the selected IRIG source's control flags, if present: Q = 0...15, deviation from UTC < 10^(Q – 1) nanoseconds (ns).

Property Name	Read/Write Access	Description
external0_continuous_time_quality	read	Continuous Time Quality indicator from the external IRIG input's control flags, if present: Q = 0...7, inaccuracy < 10^(Q + 1) nanoseconds (ns).
external0_good	read	Overall status indicator for the external IRIG input: 1 = healthy.
external0_parity_good	read	Parity status indicator for the external IRIG input: 1 = good parity.
external0_pulse_counter	read	Signal presence indicator for the external IRIG input: 32-bit counter that increments on each voltage pulse on the IRIG input.
external0_time_quality	read	Time Quality indicator from the external IRIG input's control flags, if present: Q = 0...15, deviation from UTC < 10^(Q – 1) nanoseconds (ns).
hardware_time	read	Current time from the hardware clock, ISO-8601 format: YYYY-MM-DDTHH:MM:SSZ.
input_dst_auto	read/write	When receiving IRIG-B002, enable the IRIG input to automatically adjust the incoming time for DST using the input_dst property values. The default is **0**: 0 = do not apply DST adjustment, 1 = apply DST adjustments.
input_dst_offset	read/write	Offset to apply to the incoming time when DST is active, in minutes. The default is **0**: range is –120 to 120.
input_dst_start_dow	read/write	Day of the week when DST starts, the default is **sunday**: range is sunday–saturday.
input_dst_start_month	read/write	Month when DST starts, default is **march**: range is january–december.
input_dst_start_time	read/write	Time of day when DST starts (HH:MM), default is **02:00**: range is 00:00–23:59.
input_dst_start_week	read/write	Week of the month when DST starts, default is **second**: range is first–fourth, last.
input_dst_stop_dow	read/write	Day of the week when DST stops, default is **sunday**: range is sunday–saturday.
input_dst_stop_month	read/write	Month when DST stops, default is **november:** range is january–december.
input_dst_stop_time	read/write	Time of day when DST stops (HH:MM), default is **02:00**: range is 00:00–23:59.
input_dst_stop_week	read/write	Week of the month when DST stops, default is first: range is first–fourth, last.
input_localtime_offset	read/write	When receiving IRIG-B002, configure the local time zone offset for the IRIG-B input, in hours and minutes ([–]HH:MM). The default is **00:00**: range is –12:00 to 14:00.
internal_continuous_time_quality	read	Continuous Time Quality indicator from the internal IRIG input's control flags, if present: Q = 0...7, inaccuracy < 10^(Q + 1) nanoseconds (ns).
internal_good	read	Overall status indicator for the internal IRIG input: 1 = healthy.
internal_parity_good	read	Parity status indicator for the internal IRIG input: 1 = good parity.
internal_pulse_counter	read	Signal presence indicator for internal IRIG input: 32-bit counter that increments on each voltage pulse on the IRIG input.

Property Name	Read/Write Access	Description
internal_time_quality	read	Time Quality indicator from internal IRIG input's control flags, if present: Q = 0...15, deviation from UTC < 10^(Q – 1) nanoseconds (ns).
num_seconds_since_last_jump	read	Elapsed time since the last time jump in seconds.
num_time_jumps	read	Count of times the hardware clock was adjusted by a significant time jump.
output_dst_auto	read/write	When the time source is IRIG-B002 or the system (CMOS) clock, enable the IRIG output to automatically adjust the outgoing IRIG-B004 control flags for DST by using the output_dst property values. The default is **0**: 0 = do not adjust DST control flags, 1 = adjust DST control flags.
output_dst_offset	read/write	DST offset value in the outgoing IRIG-B004 control flags when DST is active, in minutes. The default is **0**: range is –120 to 120.
output_dst_start_dow	read/write	Day of the week when DST starts, default is **sunday**: range is sunday–saturday.
output_dst_start_month	read/write	Month when DST starts, default is **march**: range is january–december.
output_dst_start_time	read/write	Time of day when DST starts (HH:MM), default is **02:00**: range is 00:00–23:59.
output_dst_start_week	read/write	Week of the month when DST starts, default is **second**: range is first–fourth, last.
output_dst_stop_dow	read/write	Day of the week when DST stops, default is **sunday**: range is sunday–saturday.
output_dst_stop_month	read/write	Month when DST stops, default is **november**: range is january–december.
output_dst_stop_time	read/write	Time of day when DST stops (HH:MM), default is **02:00**: range is 00:00–23:59.
output_dst_stop_week	read/write	Week of the month when DST stops, default is **first**: range is first–fourth, last.
output_enabled	read/write	The IRIG output state, default is **1**: 1 = enabled, 0 = disabled.
output_localtime	read/write	Configures the IRIG output to adjust the outgoing time by the output_localtime_offset value, default is **0**: 1 = apply localtime offset, 0 = do not apply localtime offset.
output_localtime_offset	read/write	Configures the local time zone offset for the IRIG-B output, in hours and minutes ([–]HH:MM). The default is **00:00**: range is –12:00 to 14:00.
source	read	Indicates which source the hardware clock is presently synchronizing to. See source_selection.
source_selection	read/write	Configures the source that the hardware clock should synchronize to, default is **auto**: auto = automatically select source based on priority External0 = external IRIG-B input (AUTO priority 1) internal = internal IRIG-B input (AUTO priority 2) ptp = precision time protocol (AUTO priority 3) system = system (CMOS) clock (AUTO priority 4)
sync_error	read	The current synchronization error between the hardware clock and source in nanoseconds (ns).

Property Name	Read/Write Access	Description
termination[a]	read/write	Configures the termination impedance for the external IRIG-B input, default is **0**: 1 = low impedance, 0 = high impedance.
utc_offset	read/write	If the time source is in TAI (for example a PTP source), set this property to the offset between TAI time and UTC time. This offset is the total cumulative sum of UTC leap seconds that have occurred, default is **0**.

[a] These properties and/or values are not applicable to the SEL-3350, they are used on other SEL Time devices.

Multiuart Class

The Multiuart class provides access to the advanced serial port settings of the SEL-3350. The signaling mode (EIA-232 or EIA-422/485) and transmitter operation are configured through the rs485 and half_duplex properties. The +5 Vdc power on Pin 1 is controlled by the port_power property. The half_duplex property enables serial port firmware to automatically enable the RTS pin while transmitting data. The loopback property enables the loopback feature for cable and software communication testing.

The Multiuart class is the directory at the path listed below, and each property listed in *Table 6.26* is a plain text file in that directory that contains the property value. Each file contains a 64-character string, with each character representing the property value for each SEL Multiuart serial port in the system. The first (left-most) character represents serial port /dev/ttySEL0 and each successive character represents the next serial port in ascending order. See *Examples on page 109* for additional details on how the serial ports are represented in the files.

Linux SysFS Path:

/sys/class/selmultiuart/

Table 6.26 MultiUart Class Properties

Property Name	Read/Write Access	Description
port_power	read/write	Enable +5 Vdc Port Power to power external equipment from the serial port. The default is **0**: 0 = disabled, 1 = enabled.
rs485	read/write	Enables either EIA-232 signaling or EIA-422/485 differential signaling to accommodate two-wire and four-wire communication schemes. The default is **0**: 0 = EIA-232 signaling. 1 = EIA-485 Manual: EIA-422/485 signaling, software must control the transmitter using RTS. a = EIA-485 Automatic: EIA-422/485 signaling, Send Data Control (SDC) feature that automatically controls the transmitter. The transmitter is enabled immediately before sending data and disabled ~40 bit-times after transmission completes. b = EIA-485 Always-On: EIA-422/485 signaling, transmitter is always enabled. Not recommended for two-wire configurations.
half_duplex	read/write	Enable when using two-wire EIA-422/485 communication. This blocks the receiver when transmitting data, preventing transmitted data from appearing in the receive buffer when the TxD and RxD pins are wired together. The default is **0**: 0 = disabled, 1 = enabled.

Property Name	Read/Write Access	Description
half_flow	read/write	Enable hardware half-flow control, which automatically asserts RTS immediately before sending data and then de-asserts ~40 bit-times after the transmission completes. This setting is only applicable when in EIA-232 mode. The default is **0**: 0 = disabled, 1 = enabled.
loopback	read/write	Enables the Loopback feature to test cabling and software configuration. See *Section 8: Troubleshooting* for more information. The default is **0**: 0 = disabled, 1 = enabled.

SFP Module Diagnostics Class

The SFP Module Diagnostics class provides access to the diagnostic data from any SFP modules plugged into the Ethernet ports ETH 1 through ETH 4. Some properties are not supported on some SFP modules. The SFP Module Diagnostics class is the file at the path listed below, and each property listed in *Table 6.27* is a name-value pair in the rows of text in that file.

Linux SysFS Path:

/sys/class/net/eth[n]/sel_port/SEL_SFPDiag

Table 6.27 SFP Module Diagnostics Class Properties

Property Name	Read/Write Access	Description
RxPower	read	Receiver optical power in nanowatts (nW)
SupplyVoltage	read	SFP module supply voltage in microvolts (µV)
Temperature	read	SFP module temperature in degrees Celsius (°C)
TxBiasCurrent	read	Transmit laser bias current in microamperes (µA)
TxPower	read	Transmit laser optical power in nanowatts (nW)

SFP Module Identification Class

The SFP Module Identification class provides access to the identification data from any SFP modules plugged into the Ethernet ports ETH 1 through ETH 4. Some properties are not supported on some SFP modules. The SFP Module Identification class is the file at the path listed below, and each property listed in *Table 6.28* is a name-value pair in the rows of text in that file.

Linux SysFS Path:

/sys/class/net/eth[n]/sel_port/SEL_SFPId

Table 6.28 SFP Module Identification Class Properties

Property Name	Read/Write Access	Description
DateCode	read	Manufacturer's SFP module build date
Length50umOM2	read	Max length with 50 µ multimode OM2 fiber in meters (m)
Length50umOM3	read	Max length with 50 µ multimode OM3 fiber in meters (m)
Length62p5umOM1	read	Max length with 62.5 µ multimode OM1 fiber in meters (m)
LengthCopper	read	Max length with copper cable in meters (m)
LengthSingleMode	read	Max length with single-mode fiber in meters (m)

Property Name	Read/Write Access	Description
Manufacturer	read	Manufacturer's name
Part Number	read	Manufacturer's part number
SELPartNumber	read	SEL part number
SELSerialNumber	read	SEL serial number
SerialNumber	read	Manufacturer's serial number
Version	read	Manufacturer's version ID
Wavelength	read	Laser wavelength in nanometers (nm)

Examples

To view the contents of a file in SysFS use the **cat** command. For example, the following command displays the state of the port power pin for all the serial ports:

cat /sys/class/selmultiuart/port_power

The port_power file contains a 64-character string, with each character representing the state of a single serial port. The first (left-most) character represents /dev/ttySEL0 and each successive character represents the next serial port in ascending order.

You can change port settings by using the **echo** command to write one or more character values (the setting values) to a character offset (such as the serial port number) in the file. Root privilege is required to write to these files. An example of changing the EIA-485 Mode settings in the Multiuart class for serial ports ttySEL0 and ttySEL1 is as follows:

cat /sys/class/selmultiuart/rs485 #shows the current settings

0000000000000000000000000000000000000000000000000000….0000

echo 0 a > /sys/class/selmultiuart/rs485 #sets ttySEL0 to EIA-485 Automatic

echo 1 b > /sys/class/selmultiuart/rs485 #set ttySEL1 to EIA- 485 Always-On

cat /sys/class/selmultiuart/rs485 #shows settings again to see changes

ab0000000000000000000000000000000000000000000000000000….0000

The methods available to set the SysFS file contents at start time depends on the device and application initialization services available. On systems with udev installed, you can create a custom rule file to configure the settings when the devices like the SEL Multiuart are added. For example, on a RHEL or Ubuntu installation, creating a file with a .rules file name extension in the /etc/udev/rules.d/ directory that contains the following text sets ttySEL1 and ttySEL2 to EIA-485 Always-On mode:

ACTION=="add", KERNEL=="selmultiuart", GOTO="selmultiuart_setup"

ACTION=="change", KERNEL=="selmultiuart", GOTO="selmultiuart_setup"

GOTO="selmultiuart_end"

```
LABEL="selmultiuart_setup"

ATTR{rs485}="1 b"
ATTR{rs485}="2 b"

LABEL="selmultiuart_end"
```

Note that the attribute names, for example ATTR{rs485}, correspond to the class setting file names in *Table 6.26*.

An alternative to the udev method to set the SysFS file contents at start time is to create a Systemd or SysV init script. For example, you can create a bash script in /usr/local/sbin/ that writes the desired changes to each SysFS file, and then configure either Systemd or SysV run the script during startup.

SECTION 7

Software Backup and Failure Recovery

Overview

The term "backup" refers to either a copy of important files on the system or the process of creating that copy to be used to recover from failure or corruption of the files on the system. Backups can be created once or periodically, depending on the backup method and the frequency of changes to system files and data. Backups should be stored on physically separate storage media to allow recovery from a physical drive failure.

Who Needs Backups

Disaster recovery is important to consider for all systems. The SEL-3350 is designed to minimize the frequency and impact of various system failures. However, failures still can occur, especially with system files and data, because they can be adversely affected by hardware failures, software errors, and human error. Everyone should perform system backups because they greatly reduce the time and effort needed to recover from these types of failures.

What to Back Up

Ideally, a backup should contain a complete copy of all files and data on the system. This type of backup is typically called a system image or drive image. These backups are the most useful because they allow relatively quick recovery from any type of failure, including unintentional user changes, file system errors, and drive failures. The disadvantage to system image backups is that they typically require you to perform the backup offline (requiring a shutdown or restart of the system).

If a system image backup is not possible, the next best method is a file backup that creates copies of all software and system settings files and any critical data files. You can typically perform this type of backup online (without shutting down or restarting), making it possible to perform backups periodically without interrupting normal operation.

When to Back Up

The most valuable backup is one that represents the system in its fully configured and operational state. It is helpful to perform a backup as the last stage of commissioning a system. This allows you to return it to that fully commissioned state in case of system failure. You should also perform backups any time an update or configuration change is made to the system in order to ensure that the system will always be restored to its most recent state.

You can also create a backup of the system as it was delivered from the factory, before any changes were made. This backup can be useful during the initial configuration process in case an unintentional change puts the system into an undesirable or failed state. Once the system is fully configured and you have created an updated backup, the factory backup is typically not useful and can be discarded.

Backup Storage Options

Backups can be stored on the installed SATA drives, on removable USB mass storage devices, and on other computer systems and corporate file servers.

Backups stored on removable storage devices physically separate the backups from the system so that they do not fail simultaneously. However, data stored on external storage devices, such as USB flash drives, can become corrupted within a few months if stored in the hot environments that the SEL-3350 may be used in.

Corporate file servers are the most reliable location to store backups. Most corporate file servers have redundant systems and backups of their own, so they have very good data security. This location is usually less convenient because most backup methods cannot create or restore backups directly to or from a remote file server. In this case, an intermediate step is required to transfer the backup to and from the file server.

Storing backups in multiple locations can improve the security and usability of the backups. For example, keep a local copy on a USB mass storage device for convenience and a copy on a corporate file server in case the local copy fails. When storing backups in multiple locations, establish processes to ensure that the versions in each location remain the same. For instance, do not update the local copy without also updating the copy on the file server.

Why Use Backups

If no backup is available when file or data loss happens, restoring the system to an operational state can take anywhere from hours to weeks. Manually recreating system configurations and settings increases the opportunity to make mistakes that affect system operation. Backups reduce this restoration time to hours or possibly minutes and help guarantee that the system is configured exactly as it was before the failure.

Backup and Recovery Methods

From a functionality and usability standpoint, the SEL-3350 is very similar to a PC. Most methods of backup and recovery that can be performed on a standard PC can also be performed on the SEL-3350. This section briefly describes a few common backup methods that can be used on the SEL-3350.

SEL Backup and Recovery Tool

SEL developed the SEL Backup and Recovery Tool (SEL BaRT) to enable customers to quickly and easily create system image backups. Features specific to SEL devices are incorporated into SEL BaRT, such as system monitoring and watchdog support. SEL BaRT was developed using open-source technology, and it is provided free of charge. SEL BaRT can service the watchdog on all SEL products.

SEL BaRT and its application guide, "Using SEL BaRT to Back Up and Restore SEL Computers" (AG2012-05) are available on the SEL website at selinc.com/selbart.

Create an SEL BaRT drive by downloading SEL BaRT from the SEL website and installing it onto a USB storage device. To start SEL BaRT, plug the drive into the SEL-3350, restart, press **<F5>**, then select the drive from the list of boot options.

In the `SEL BaRT` menu, options are available to create, restore, and validate backup images, as well as select alternate locations for the backup images to be stored. If SEL BaRT is on a writable drive (such as a flash drive or hard drive), the images can be stored directly on the drive. If SEL BaRT is on read-only media (such as a CD or DVD), backup images must be stored on an additional USB storage device, SATA drive, or a network location. Once the backup image is created, it can be stored permanently on the SEL BaRT drive or copied to another location by plugging the SEL BaRT drive into a computer or laptop.

Windows Backup

Most Microsoft Windows operating systems include a built-in backup feature that can create a backup while the system is running without interrupting normal operation. The backup feature can be used to create a system image manually or to schedule periodic system backups. Instructions for using Windows backup features can be found on the Microsoft website. Note that any backup, restore, or repair feature that requires booting into a non-default Windows configuration may not incorporate support for the SEL-3350 watchdog, and so you may need to first disable the watchdog. See *Section 4: BIOS Setup* to enable or disable the watchdog in the `Boot Features` menu.

Other Methods

Numerous third-party tools and software are available for creating backups of PCs, laptops, and servers. Most of these tools and software can be used to create backups of the SEL-3350.

Bootable or online methods allow you to create backups without removing the SATA drives from the SEL-3350. These methods are similar to the SEL BaRT and Windows backup methods, requiring little or no system downtime to perform a backup. One disadvantage to these methods is that they may require booting into an alternate operating system to perform the backup or restore operation. In that case, you must first disable the SEL-3350 watchdog to avoid periodic restarts during the process. Once the backup or restore operation is complete, you should reenable the watchdog. See *Watchdog on page 59* for information on configuring the watchdog.

Offline backup methods use a separate PC to create a backup from the SEL-3350 SATA drive. These methods require removing the SATA drives from the SEL-3350 and plugging them into a PC via eSATA or a USB SATA drive dock. An image can then be created using software running on the PC. Offline methods are usually simple to use because they only require software installed on the PC, and the backup image is stored on the PC where it can be easily transferred to other locations. However, offline methods also typically involve greater downtime, and you must ensure that the SATA drives are reinstalled into the SEL-3350 in the correct slots.

SECTION 8

Troubleshooting

Overview

This section includes troubleshooting information related to the SEL-3350.

Operational Issues

Blank Monitor

The SEL-3350 is compatible with most computer monitors. *Table 8.1* lists possible causes and solutions for a blank monitor.

Table 8.1 Blank Monitor Troubleshooting

Symptoms/Possible Cause	Diagnosis/Solution
Power saver is activated	➤ Move the mouse or press a keyboard key to ensure that the screen saver is not activated.
Monitor is off	➤ Verify that the monitor is connected to a power source that meets the monitor's input ratings. ➤ Locate the monitor power button and press to turn the power on. ➤ If the monitor has multiple video inputs, verify that the correct input is selected.
Monitor is on but blank	➤ Verify that the monitor brightness is not turned all the way down.
SEL-3350 power is off	➤ Ensure that BIOS defaults are correct. Reset the BIOS to defaults as shown in *Section 4: BIOS Setup*. ➤ Verify that the SEL-3350 is connected to a power source that meets the input ratings stenciled on the back of the power supplies.
Blown power supply fuse	➤ Check the power supply fuse and replace if necessary, see *Power Supply on page 41*.
Equipment failure	➤ Contact your system administrator if you cannot determine the cause.

SEL-3350 Fails to Start the Operating System

Undesirable operating conditions, such as sudden loss of power, system lockup, or failed software installations, may adversely affect the operating system, preventing the system from starting up and running properly. Often, the system can be restored to a workable state by using the recovery options presented by the operating system after a failed startup. If recovery options are not available or do not fix the problem, you must reinstall the operating system either through use of installation media or a previously created backup image.

SEL-3350 Fails to Start a New Operating System or USB Media

If you are unable to boot up a newly installed operating system or bootable USB media, enter the BIOS setup and verify that the drive you are attempting to start from is listed in the `Boot` menu. If it is not listed, verify that it is installed correctly and that it operates correctly when installed in a different system. If the boot drive is listed but the system will not boot from it, it is possible that Secure Boot is not supported. In the `Security` menu in the BIOS setup, set **Secure Boot** to **Disabled**. If that does not resolve the problem, configure the operating system media for the UEFI boot.

100 Percent CPU Burden

To determine which application is responsible for consuming all CPU time, use the operating system tools to view a list of running processes and the CPU usage of each process. Once you identify the process showing high CPU usage, evaluate if you can safely terminate that process or application to verify if the CPU burden decreases. Otherwise, evaluate the configuration of the application to determine if the CPU burden can be decreased.

Networking

Although proper system networking is an extremely broad topic, there are a few steps that can help with simple network troubleshooting.

Step 1. Ensure that the Ethernet hub, switch, or router is compatible with the SEL-3350. See *Ethernet Ports on page 47* to determine compatible network interfaces.

Step 2. Verify that the SEL-3350 and the network are communicating by observing the LEDs associated with the Ethernet network switch or hub.

Step 3. If the LEDs display no activity, then verify that the proper cabling has been used.

Step 4. If you are sure the Ethernet cabling is correct, then try temporarily disabling the operating system firewall, if present, and ping the SEL-3350 from a computer or laptop. As a basic rule, nothing will work if pinging does not work. When pinging, use an IP address or hostname. Ensure that each physically separate network is configured for a different IP range/subnet.

System Clock Behaving Erratically

Ensure that no software applications are trying to set or synchronize the system time. Examples of some programs that frequently set the system clock on a regular basis are SEL-5860 and Subnet SubSTATION Server. In SubSTATION Server, slave protocols like DNP3, IEC 60870-5-101/104, and Harris 5000/6000 can synchronize system time based on the time provided by the master devices.

Blinking Cursor After BIOS Screen

If the operating system fails to boot and instead you see a black screen and blinking white cursor, then the SEL-3350 probably attempted to boot from a drive that does not have an operating system installed. To fix this problem, enter the BIOS setup and verify that the boot order is configured with the correct SATA drive as Boot Option #1 (see *Boot Menu on page 64*). Press **<F10>** to save changes and try booting again. The system should restart from the correct drive.

SATA Drive Failures

Problems with SATA drives can cause the system to intermittently lock up or restart without warning. If these problems only occur during periods of high SATA drive activity, the cause may be related to the drive operating temperature or power consumption. Most SATA drives have temperature sensors that can be monitored using third-party Self-Monitoring, Analysis, and Reporting Technology (S.M.A.R.T.) software. The S.M.A.R.T. software also reports diagnostic data from the SATA drive, which can help you determine if the drive is failing. If the SATA drive temperature and diagnostic data do not indicate a problem, try removing one SATA drive from the system to reduce the SATA power consumption. If removing a drive resolves the problem, then you will need to change to different SATA drives that use less power. See *SATA Drives on page 44* for guidelines on selecting suitable SATA drives.

Forgotten Password

If you have forgotten the password for the BIOS setup, SEL RTAC operating system, or SEL Blueframe operating system, use the Password Disable jumper to allow you to reset the system password. See *System Jumpers on page 46* for instructions on how to set system jumpers.

If the forgotten password is for a Microsoft, Linux, or another third-party operating system, the operating system may have built-in reset features. If the operating system does not provide a reset feature, commercial and open-source tools may be available to do this. Refer to the security policies for how your company handles forgotten passwords.

Identifying Ethernet and Serial Ports

On Windows operating systems, the SEL-3350 Ethernet and serial drivers include an Identify Port feature that allows you to correlate each logical Ethernet adapter and serial (COM#) port with each physical port. This feature can be enabled through the Properties window for the port or adapter in the Windows Device Manager. For serial ports, select the **Port Settings** tab of the Properties window, then select the **Identify Port** button. For Ethernet ports, select the **Advanced** tab of the Properties window, then set the **LED Test** setting to **Enabled**. This will cause both status LEDs on the port to flash repeatedly in unison. The serial COM port numbers are assigned to SEL serial ports by the SortPorts utility, which sorts them into sequential order to simplify port identification. The SortPorts utility is scheduled to run during system startup so that COM port numbers will be sorted consistently after driver installation and also after any hardware changes. If you want to customize the COM port

numbers, you must prevent SortPorts from running at startup by opening Windows Task Scheduler and locating the task named **SEL Sort Serial Ports**, then right-click on that task and select **Disable**. If you want to run SortPorts manually, first close any applications and stop any services that may have an SEL serial port open or in use, then run C:\Program Files\SEL\bin\SortPorts.exe from a command prompt or by double-clicking on the file. See *Ethernet Port Settings on page 75* and *Serial Port Settings on page 78* for more information.

On Linux operating systems, the logical SEL serial ports are located at /dev/ttySEL#, where # will be a sequential number, ttySEL0 will be Port 1, and ttySEL15 will be Port 16. The Ethernet devices should enumerate in sequential order, where logical eth0–3 will be the rear-panel ports ETH1–ETH4, and eth4 will be the front-panel ETHF.

Serial Port Loopback

When the Loopback feature is enabled on a port, the port acts as a two-sided data mirror. All data and handshaking signals (RTS/CTS) received by the SEL-3350 serial port, either from software or from the physical serial port, are mirrored back to the source. No data pass through from software to the physical port, or vice versa. Use the Loopback feature to test the data path through all physical communications media from the remote device to the SEL-3350 serial port, or the data path from software through any intermediary software or device drivers to the serial port. See *Linux Settings on page 76* for details on enabling the Loopback feature.

Application Guides

See the SEL-3350 product webpage and SEL literature webpages at selinc.com for application guides to assist you with troubleshooting and setup steps for various features of the SEL-3350.

Technical Support

We appreciate your interest in SEL products and services. If you have questions or comments, please contact us at:

Schweitzer Engineering Laboratories, Inc.
2350 NE Hopkins Court
Pullman, WA 99163-5603 U.S.A.
Tel: +1.509.338.3838
Fax: +1.509.332.7990
Internet: selinc.com/support
Email: info@selinc.com

APPENDIX A

Manual Versions

Instruction Manual

The date code at the bottom of each page of this manual reflects the creation or revision date.

Table A.1 lists the instruction manual versions and revision descriptions. The most recent instruction manual version is listed first.

Table A.1 Instruction Manual Revision History

Date Code	Summary of Revisions
20241218	Section 1 ➤ Updated *Specifications*.
20241120	Section 1 ➤ Updated *Specifications*.
20241105	Section 3 ➤ Added *Figure 3.7: SSD Drive Bay Jumpers*. ➤ Added note to *IRIG-B Output*.
20240830	Section 2 ➤ Updated *Figure 2.6: SEL-3350 3U Front-Panel Rack-Mount Option*. ➤ Updated *Status Indicators*. Section 3 ➤ Updated *Removal, Installation, and Contact Inputs and Outputs*.
20240815	Section 1 ➤ Updated *Specifications*.
20240709	Section 2 ➤ Updated *Power*. Section 4 ➤ Updated *Recovery Mode*. Section 6 ➤ Updated *Table 6.3: Linux Settings*. ➤ Updated *Contact Input Class*, *Contact Output Class*, and *General Purpose I/O Class*. ➤ Added *LED Class, Serial Expansion Board Overcurrent Class,* and *Power Supply Class*.
20240321	Section 1 ➤ Updated *Specifications*.
20231013	Section 1 ➤ Updated *Specifications*.
20230707	Section 6 ➤ Updated *Table 6.4: Serial Port Advanced Settings*. Section 8 ➤ Updated *Identifying Ethernet and Serial Ports*. Appendix B ➤ Added new cybersecurity appendix.

Date Code	Summary of Revisions
20230623	**Section 1** ➤ Updated *Specifications*. **Section 3** ➤ Updated *Figure 3.11: IN101 and OUT101 Terminal Locations*. ➤ Updated *Table 3.3: IN101 and OUT101 Terminal Connections*.
20230222	**Section 1** ➤ Updated *Features*. ➤ Updated *Models* and *Options* in *Models and Options*. ➤ Updated *Applications*. ➤ Updated *Specifications*. ➤ Added *Table 1.2: System Power Consumption* and *Table 1.3: Peripheral Connection Rated Current Output* in *Specifications*. ➤ Updated *Figure 1.1: Engineering Communication Through a Serial Access Point*, *Figure 1.2: Engineering Communication Through a Network Access Point*, *Figure 1.3: Protocol Conversion*, *Figure 1.4: Distribute Time With Serial Communications Cable*, *Figure 1.5: System Control and Synchrophasor Data Concentration*, *Figure 1.6: SCADA Communication Through a Single Access Point*, *Figure 1.7: Security Through a Single Access Point*, and *Figure 1.8: Automate and Integrate With Communication and Logic*. **Section 2** ➤ Updated *Unit Mounting* in *Unit Placement and Maintenance*. ➤ Updated *Figure 2.1: SEL-3350 1U Rack-Mount Dimensions*. ➤ Updated *Figure 2.2: SEL-3350 1U Panel-Mount Dimensions*. ➤ Added *Figure 2.3: SEL-3350 3U Rack-Mount Dimensions*. ➤ Added *Figure 2.4: SEL-3350 3U Panel-Mount Dimensions*. ➤ Updated *Figure 2.5: SEL-3350 1U Front-Panel Rack-Mount Option*. ➤ Added *Figure 2.6: SEL-3350 3U Front-Panel Rack-Mount Option*. ➤ Added *Device Label* in *Front Panel*. ➤ Updated *Figure 2.7: SEL-3350 1U Rear-Panel*. ➤ Added *Figure 2.8: SEL-3350 3U Rear-Panel*. ➤ Updated *Serial Ports*, *Grounding*, *Contact Inputs*, *Contact Outputs*, and *Power* in *Rear Panel*. **Section 3** ➤ Updated *Overview*. ➤ Updated *Removal*, *Installation*, *Real-Time Clock and BIOS Battery*, and *Random-Access Memory Slot* in *Mainboard*. ➤ Updated *Figure 3.2: 1U Chassis Top Panel Removal*. ➤ Added *Figure 3.3: 3U Chassis Top Panel Removal*. ➤ Added *Removal and Installation* in *Power Supply*. ➤ Updated *Fuse Replacement* in *Power Supply*. ➤ Updated *RJ45 Copper Connections*, *SFP Fiber-Optic Connections*, and *Failover Mode* in *Ethernet Ports*. ➤ Added *SEL-3350 With 3U Chassis* in *Fuse Replacement*. ➤ Added *Figure 3.4: Power Supply Fuse Location (3U Chassis Power Supply Module)*. ➤ Updated *Serial Ports*. ➤ Updated *+5 Vdc Port Power* and *Cabling Guidelines* in *Serial Ports*. ➤ Updated *Contact Inputs and Outputs*. ➤ Updated *Figure 3.10: IN101 and OUT101 Terminal Locations*. ➤ Updated *Table 3.3: A08–A13 Connector Pins*. ➤ Updated *Universal Contact Input IN101*, and *Contact Inputs IN201–IN224*, and *Contact Outputs* in *Contact Inputs and Outputs*. ➤ Added *Contact Inputs IN201–IN224* in *Contact Inputs and Outputs*. **Section 4** ➤ Added note in *Overview*. **Section 5** ➤ Added note in *Operating System Installation*.

Date Code	Summary of Revisions
	Section 6 ➤ Updated *Linux Settings* in *Serial Port Settings*. ➤ Updated *CMOS Clock Synchronization* and *Ethernet (PTP) Synchronization* in *IRIG-B and Ethernet Time Synchronization.* ➤ Updating *Table 6.5: Linux Serial Port Advanced Settings*. ➤ Updated *Table 6.7: ptp4l Configuration File Common Settings*. ➤ Added *Setting Up ptp4l.conf* in *IRIG-B and Ethernet Time Synchronization.* ➤ Updated *Contact Input Class* in *SEL MI Classes in Windows WMI*. ➤ Updated T*able 6.10: Contact Input Class Additional Properties*. ➤ Updated *Contact Input Class* in *SEL MI Classes in Linux SysFS*. ➤ Updated *Table 6.19: Contact Input Class Properties*. ➤ Added *Contact Output Class* in *SEL MI Classes in Linux SysFS*. ➤ Added *Table 6.20: Contact Output Class Property*. **Section 8** ➤ Updated *Table 8.1: Blank Monitor Troubleshooting*. ➤ Updated *Identifying Ethernet and Serial Ports* in *Operational Issues*.
20220825	**Section 2** ➤ Updated *Figure 2.4: SEL-3350 Rear-Panel*. ➤ Updated *Ethernet Ports* in *Rear Panel*. **Section 3** ➤ Updated *Table 3.1: System Jumper Descriptions*. ➤ Updated *Contact Inputs and Outputs* in *Hardware Setup and Serviceability*. ➤ Added *Figure 3.9: Connector Pin Orientation*. ➤ Added *Table 3.3: A08–A13 Connector Pins*.
20220729	**Section 1** ➤ Added *Network Time Protocol (NTP) Modes*, *Simple Network Time Protocol (SNTP) Accuracy*, and *Precise Time Protocol (PTP)* under *General* in *Specifications*.
20220624	**Section 1** ➤ Updated *Specifications*.
20220324	**Preface** ➤ Updated *Other Safety Marks* Table. **Section 1** ➤ Updated *SATA Drives* in *Models and Options*. ➤ Updated *Specifications*. **Section 2** ➤ Added safety warnings to *Contact Input*, *Contact Output*, and *Power.* **Section 3** ➤ Updated *SATA Drive Types*. ➤ Added *Precision Time Protocol (PTP)* to *Ethernet Ports*. ➤ Updated *IRIG-B Output Parity*. ➤ Added *System Alarm*. **Section 4** ➤ Updated *Boot Features*. **Section 6** ➤ Updated *Overview*. ➤ Added *Time Sync Alarm* and *Examples* to *SEL Alarm Service*. ➤ Added *SNMP Agent Extension*. ➤ Added *Support Utilities*. ➤ Added *Ethernet Port Settings*. ➤ Added *Serial Port Settings*. ➤ Added *Contact Input and Output Settings*. ➤ Added *IRIG-B and Ethernet Time Synchronization*. ➤ Updated *SEL Management Interface*.

Date Code	Summary of Revisions
20210720	**Section 1** ➤ Updated *Conducted and Radiated Emissions (Class A)* in *Specifications*.
20201211	➤ Initial version.

APPENDIX B

Cybersecurity Features

Introduction and Security Environment

Product Function

The SEL-3300 product line consists of the SEL-3350, SEL-3355, and SEL-3360 platforms, as well as SEL-3390E4, SEL-3390S8, and SEL-3390T PCIe expansion cards. These products provide powerful and flexible automation and computing platforms and peripherals that you can configure with a wide range of SEL and third-party operating systems (OS) and applications. The rugged hardware of SEL-3300 devices enables you to deploy fully customized automation and computing solutions into industrial environments that are not suitable for general purpose automation controllers, computers, and servers.

This appendix focuses on the security features and attributes of the base system components inherent to SEL-3300 devices. The wide range of OSs and applications that can be used with the SEL-3300 devices, such as SEL Blueframe, SEL RTAC, Microsoft Windows, and Linux variants, each have their own sets of security features and requirements that are too broad to cover in-depth in this appendix. For additional details on your OS and applications, refer to their instruction manuals or online resources.

Security Requirements

SEL-3300 devices do not have a fixed role or application—they are open platforms designed to run an extremely broad range of your custom-designed and configured OSs and applications. Additionally, the external physical interfaces can be configured to include multiple Ethernet connections, serial connections, USB devices, and keyboard/mouse/video user interfaces, depending on the needs of a given installation. To secure the applications and interfaces used in your installation, you must be familiar with their features and capabilities.

A defense-in-depth strategy uses security controls not only on the SEL-3300 device but also other attached devices. To minimize servicing needs and attack vectors, the SEL-3300 device should be configured with the minimum set of applications and features required. External devices should be used to monitor the health of the system, such as collecting system logs and monitoring the system alarm. Many of the best practices applicable to SEL-3300 devices parallel those used in the information technology (IT) and services (IS) professions. These practices include, but are not limited to, user access controls, network and internet security, firewalls, antivirus, remote access, OS and application patch management, and firmware/BIOS/UEFI management. If you are unfamiliar with these technologies, it may be beneficial to solicit help from the IT/IS professionals within your organization, as they may have an established set of security best practices that fit your organization's needs and requirements.

The Center for Internet Security (CIS) provides resources that can help secure your devices and infrastructure. The CIS is a community-driven nonprofit organization that provides globally recognized best practices for securing IT systems and data. They include a global community of IT professionals working to continuously evolve security standards and to safeguard against current and new threats. For more information, visit https://www.cisecurity.org/.

Version Information

Obtaining Version Information

The SEL RTAC or Blueframe OSs manage all updatable components (including BIOS and device firmware) within the OS itself; the individual SEL-3300 components are not updated separately from these OSs. For these SEL OSs, the only version information needed is the top-level OS version (referred to as the firmware version in the case of RTAC). Refer to the SEL RTAC and Blueframe documentation for details on how to obtain the OS version.

On SEL-3300 devices with third-party OSs like Microsoft Windows and Linux, there are many user-serviceable components that can each have multiple methods to obtain the version information. *Table B.1* provides a list of SEL-3300 components and one simple method to view the version information for each component within most versions of Windows, Linux, and BIOS Setup (if applicable). Additional methods may be available depending on the OS. Refer to the respective OS instruction manuals or online resources.

Table B.1 View Version Information in SEL-3300 Series Components

Component	Windows	Linux	BIOS Setup
BIOS/UEFI	msinfo32.exe	dmidecode -s bios-version	Main > Mainboard Information
Embedded Controller (SEL-3355/SEL-3360 only)	N/A	N/A	Main > Mainboard Information
Intel Management Engine (ME) Firmware (SEL-3355/SEL-3360 only)	MEInfo (included with ME firmware update package)	MEInfo (included with ME firmware update package)	Features > Manageability Settings
Operating System	winver.exe	cat /etc/os-release	N/A
Device Drivers	appwiz.cpl	Package manager (apt, dpkg, rpm, yum, etc.)	N/A
Application Software	appwiz.cpl	Package manager (apt, dpkg, rpm, yum, etc.)	N/A

The SEL-3300 device component update packages can be obtained directly from SEL (see *Product Updates on page 131* for details). These update packages contain a readme.txt file that provides instructions for installing the update and may include instructions for checking the version information if there is not a standard method supported by the OS.

Commissioning and Decommissioning

Commissioning

Commissioning SEL-3300 devices includes setting up the hardware and BIOS settings, the OS, and the applications into the final functioning state before the system is put into service. For assistance configuring any OSs or application features discussed in this section, refer to their instruction manuals or online resources.

BIOS Setup contains security-related settings and features like Secure Boot, USB port enable/disable, and Administrator password to prevent unauthorized BIOS setting changes. The SEL-3355 and SEL-3360 also have Intel Active Management Technology (AMT), which is disabled by default but can be enabled and provisioned through BIOS Setup. Intel AMT security features like user accounts and TLS encryption can be enabled through the remote management software.

User accounts and access controls are supported on all OSs that can be run on SEL-3300 devices. If you install your own OS, ensure it is installed using UEFI boot to support security features like Secure Boot. At a minimum, configure the administrator/root accounts for system management use only, and set up a separate user account with limited access to only the applications and features necessary for the system's roles/applications. If possible, rename and/or disable any default accounts (such as the Administrator account on Windows). Active Directory or LDAP servers should be used whenever possible for centralized user management and access controls instead of locally managed user accounts.

Disk encryption is enabled automatically on SEL RTAC and Blueframe OSs to secure user data. If your SEL-3300 device is running Windows or Linux, disk encryption is usually disabled by default but can be enabled on most OSs.

Malware/virus protection is built into the SEL Blueframe and RTAC OSs through whitelisting technologies. Windows and Linux OSs may have built-in malware/virus protection features and support for third-party malware/virus protection software. Ensure your SEL-3300 device always has some form of malware/virus protection active and up to date.

Firewalls and other network security features are built into most OSs. Verify the firewall is enabled and that the set of allowed ports and services is minimized to only include what is necessary for each network connection. The documentation for your OS and applications may provide information on the ports and services necessary for proper operation.

Once the system configuration is complete, review OS and application event logs for any warnings, errors, or unexpected activity. Then create an audit of all running applications and services to verify all is as expected and be used as a baseline that can be referenced for future system audits. The audit should include a list of all services and applications installed, including:

- Service/application name and version
- Associated user/service accounts
- When it runs (startup type, schedule, etc.)
- Ports used (network address, TCP/IP ports, serial ports, etc.)
- Purpose and high-level protocols used
- List and describe any additions to the startup task list (autorun additions)

Always create a full backup of all system and application configuration files once commissioning is complete (see *Section 7: Software Backup and Failure Recovery*).

Secure Operation Recommendations

Monitor and maintain the operational health of the SEL-3300 device at regular intervals. Collect or forward system logs to a central logging device or repository so that they can be monitored for unexpected events. Monitor the overall health of the SEL-3300 device by connecting the system alarm contact output to a local monitoring device that can report and/or take action on the alarm.

Check for firmware, OS, and software updates periodically (see *Product Updates on page 131*). SEL provides a security notifications service that will alert you about any security-related updates to the SEL components in your SEL-3300 device, which you can sign up for at https://selinc.com/support/security-notifications/. Review update release notes to determine if the updates are applicable to your use of the SEL-3300 device. Install necessary updates, then verify proper system operation and review event logs for any warnings, errors, or unexpected activity. Create a new audit of the services and applications to check against previous baseline audits (see *Commissioning on page 125*).

Verify the system components are still supported and being updated by the original manufacturer and plan for future end-of-support events. Even if an end-of-support date is not provided, assume it will happen at some time and have a plan in place. The configurable nature of SEL-3300 devices means end-of-support events often require significant effort because the device, OS, and applications are interdependent with each other and thus may need to be updated or migrated at the same time.

Decommissioning

When removing an SEL-3300 device from service for a long term, such as to be stored, repaired, replaced, sold, or disposed, remove sensitive data to prevent possible disclosure.

In BIOS Setup, clear the password if one has been set. Remove any custom Secure Boot keys by deleting each custom key or by setting the Secure Boot Mode setting to Standard to install factory-default keys. If Intel AMT is enabled, reset the Intel AMT settings by enabling the Un-Configure ME setting in BIOS Setup under **Features > Manageability Settings**.

SEL-3300 devices use Serial-ATA (SATA) solid-state drives (SSDs) for storage of the OS, applications, and user data. The SSDs are user-serviceable, so you can easily remove them from the SEL-3300 device and move them to a secure storage area or erase all stored data using a number of standard methods or devices. The SSDs support the ATA **Secure Erase** command, which can be sent to the SSD using either OS or third-party software tools. The OS may not allow the drive to be erased if the OS is currently installed on that drive, so the

SSD will likely need to be plugged into a device as a secondary drive in order to execute the **Secure Erase** command. For example, the following commands can be run on Linux distributions to perform a secure erase on an SSD with the label **'sdb'** (replace <passwd> with your choice of password):

hdparm --user-master u --security-set-pass <passwd> /dev/sdb

hdparm --user-master u --security-erase <passwd> /dev/sdb

External Interfaces

Ports and Services

Physical Ports

USB ports connect to input devices and peripherals, such as a keyboard, mouse, touchscreen, printer, or portable data storage device. They are located on the front and rear panels of the device, labeled as either USB or USBx, where *x* is a number or letter. There is also an internal USB connection on the mainboard that can only be accessed after removing the top panel of the product. USB ports are enabled by default and can be disabled individually in BIOS/UEFI Setup, and some operating systems provide security settings to block USB ports and/or devices.

Display ports connect to display devices like monitors, TVs, and projectors. They are located on the rear panel of the device, labeled as either DisplayPort or DVI-D depending on the connection type. Display ports are mostly one-directional by nature, sending digital video and audio data to the display device, but they also have a bidirectional low-speed auxiliary/display data channel (DDC) used for display device identification. Display ports are enabled by default and can be disabled in most operating systems via either display settings or by disabling the display device driver.

HD Audio ports are analog electrical interfaces to speaker systems, headphones, microphones, and various audio sources. They are located on the rear panel of the device, labeled as Audio with color-coded TRS connections. Being analog interfaces, no data is exchanged through these ports. The HD Audio ports are enabled by default and can be disabled in BIOS/UEFI Setup and in most operating systems, can be disabled via either audio settings or by disabling the HD audio device driver.

Ethernet ports connect to networks via copper (RJ45) or fiber-optic (LC/SFP) cables. They are located on the front and rear panels of the device and are labeled ETH x where *x* is a number or letter (except on SEL-3390 PCIe cards where the port label is simply a number). The Ethernet ports on SEL-3300 devices are discrete connections with unique MACs, so by default there is no path for data to traverse from one port to another. Ethernet ports are enabled by default and can be disabled in most operating systems via either network settings or by disabling the Ethernet device driver. On SEL-3355 and SEL-3360 devices, the Ethernet ports ETH 1 and ETH 2 can also be disabled in BIOS Setup.

Serial ports connect to devices like protective relays, automation controllers, and modems. They are located on the rear panel of the device and are labeled COM x where *x* is a number (except on SEL-3390 PCIe cards where the port label is simply a number). Most SEL-3300 device serial ports repurpose the DTR and DSR signal pins as IRIG-B input or output pins for precise time

distribution to serial-connected devices. The IRIG-B input and output functions operate independently from the serial port functions—see the following IRIG-B description. Serial ports are enabled by default and can be disabled in most operating systems via either device settings or by disabling the serial device driver. On SEL-3355 and SEL-3360 devices, serial ports **COM 1** and **COM 2** can also be disabled in BIOS Setup.

IRIG-B inputs and outputs connect to precise time sources, automation controllers, and protective relays. They are located on the rear panel of the device, using either BNC connections labeled **IRIG-B IN** or **IRIG-B OUT** or serial port connections (see previous Serial description). IRIG-B inputs and outputs are enabled by default and can be disabled in most operating systems via either time-synchronization settings or by disabling the IRIG-B device driver.

Logical Ports

The SEL-3300 devices and associated device drivers have no logical ports open by default. The OS and application software running on the system create and configure all logical ports associated with the SEL-3300 device ports. The wide range of OSs and applications that can be used with the SEL-3300 devices, such as SEL Blueframe, SEL RTAC, Microsoft Windows, and Linux variants, each have their own sets of logical ports that are too broad to cover in this appendix. Refer to the instruction manuals or online resources for your OS and applications for information on logical ports and their functions. If you require a complete list of logical ports for your SEL-3300 device, you must perform an audit, such as a port scan of the system after the OS and all applications are configured.

Table B.2 lists the logical ports that are part of the Intel AMT feature accessible from the ETH 1 Ethernet port on SEL-3355 and SEL-3360 devices. The ports are controlled by the Intel Management Engine firmware, so they operate independent of the OS and application software running on the system. The default setting for Intel AMT is disabled, which disables all associated ports. When Intel AMT is enabled, some of the ports are automatically enabled, while others are enabled once the associated feature is enabled via either the MEBx configuration menu or the remote management software (such as Intel Manageability Commander or Mesh Commander). See *Section 9: Intel Active Management Technology (AMT)* in the SEL-3355 and SEL-3360 instruction manuals for more information.

Table B.2 Logical Ports for Intel AMT on SEL-3355 and SEL-3360

Port Number	Network Protocol	Default State	Setting to Enable/ Disable Port	Purpose
623	ASF-RMCP	Disabled	Intel AMT enabled	DASH/DMTF
664	ASF-RMCP (TLS)	Disabled	Intel AMT enabled	DASH/DMTF (TLS)
5900	TCP	Disabled	Port 5900	KVM (VNC Server)
16992	HTTP	Disabled	Intel AMT enabled	Web Management
16993	HTTPS (TLS)	Disabled	TLS	Web Management (TLS)
16994	TCP/VNC	Disabled	Redirection	KVM/SOL/Storage Redirection
16995	TCP/VNC (TLS)	Disabled	Redirection & TLS	KVM/SOL/Storage Redirection (TLS)

Access Controls

This section describes the access controls inherent to SEL-3300 device hardware, for example, in BIOS Setup and Intel AMT. During normal runtime on a fully commissioned device, most access controls are facilitated through the OS and application software running on the device. Refer to the instruction manuals or online resources for your OS and applications for information on their access control features.

Privilege Levels

The BIOS Setup interface provides privilege-level control by requiring password authentication to access BIOS Setup. The password is disabled by default, allowing full read/write access to BIOS Setup without authentication.

The Intel AMT feature on SEL-3355 and SEL-3360 devices provides privilege-level control through user accounts that can be assigned access to individual AMT features. Intel AMT is disabled by default, which disables all privilege levels.

Local Accounts

The Intel AMT feature on SEL-3355 and SEL-3360 devices is disabled by default. When Intel AMT is enabled, a default admin account is created. This account cannot be renamed or removed. Additional user accounts can be created and managed via the remote management software (such as Intel Manageability Commander or Mesh Commander). The admin account always has full access to all features, while each additional user account must be assigned access to individual AMT features.

Passwords

The BIOS Setup interface contains an Administrator Password setting which, when configured with an appropriate password, requires the password to be entered to gain access to BIOS Setup. The Administrator Password is blank by default, which allows access to BIOS Setup without entering a password. SEL recommends setting the Administrator Password to prevent unauthorized access to the critical system settings in BIOS Setup. The password must be 8 to 20 characters in length and contain at least one uppercase and lowercase letter, one number, and one special character. If an incorrect password is entered three times while trying to access BIOS Setup, the device writes an event to the SMBIOS Event Log and must be manually reset via a power cycle or by pressing **<Ctrl+Alt+Delete>**. See *Section 4: BIOS Setup* for information on setting the Administrator Password setting.

The Intel AMT feature on SEL-3355 and SEL-3360 devices support multiple user accounts and passwords. When AMT is enabled, the default admin account is enabled with the default password "admin". The initial MEBx Setup process requires admin to login with the default password and then forces the user to set a new password for admin. Intel AMT passwords must be 8 to 32 characters in length and contain at least one uppercase and lowercase letter, one number, and one special character. If an incorrect password is entered while trying to access Intel AMT, the device writes an event to the AMT Event Log.

X.509 Certificates

The Intel AMT feature on SEL-3355 and SEL-3360 devices supports X.509 certificates for the TLS encryption of the management interfaces. The default configuration has no X.509 certificates installed and TLS is disabled. Generate and install certificates via the remote management software (such as Intel Manageability Commander or Mesh Commander). See the remote management software instruction manual for additional information.

Logging Features

This section describes the logging features inherent to SEL-3300 device hardware, for example, in BIOS Setup and Intel AMT. During normal runtime on a fully commissioned device, most logging is facilitated through the OS and application software running on the device. Refer to the instruction manuals or online resources for your OS and applications for information on their logging features.

Security Events

The BIOS stores security events in the SMBIOS event log. The Intel AMT feature on SEL-3355 and SEL-3360 devices stores security events in the AMT Event and Audit logs, which are accessible from the remote management software (such as Intel Manageability Commander or Mesh Commander). These events include failed authentication attempts, configuration changes, hardware initialization reports, and subsystem errors and failures.

Internal Log Storage

The SMBIOS event log has a maximum size of 64 KB. The Intel AMT Event and Audit logs can each hold approximately 400 events. When the logs reach maximum capacity, new events replace old events (first in, first out).

Alarm Contact

SEL-3300 devices have a system alarm that drives the **ALARM** LED status indicator on the front-panel and operates a contact output on the rear panel. On SEL-3355 and SEL-3360 devices, the contact output is named ALARM, and this output is always controlled by the system alarm status. On SEL-3350 devices, the contact output is named OUT101, and this output is configurable to be controlled by either the system alarm status (default configuration) or by system software. See *Section 2: Installation* for information on the ALARM LED status indicator and contact output.

Backup and Restore

Always backup all system and application configuration files after commissioning or updating a system. Some OSs include backup features and functionality; see the OS manual or online help for details. A complete drive backup will capture the entire system configuration and can be used for quick

disaster recovery in the case of a hardware failure or file system corruption. The SEL-5813 Backup and Recovery Tool (SEL BaRT) is available at no cost from the SEL website at https://www.selinc.com/selbart/ and can be used to create full drive backups on all SEL-3300 devices. Refer to *Section 7: Software Backup and Failure Recovery* for more information.

Malware Protection Features

Malware/virus protection is built into the SEL Blueframe and RTAC OSs through whitelisting technologies. Windows and Linux OSs may have built-in malware/virus protection features and support for third-party malware/virus protection software. Ensure your SEL-3300 device always has some form of active and up-to-date malware/virus protection.

Product Updates

Ensure all OS, software, and firmware components are kept up to date for the purpose of correcting defects and security vulnerabilities in those components. *Obtaining Updates on page 131* lists components that may be included with SEL-3300 devices and provides the recommended sources for updates to those components. Additionally, see the SEL Process for Disclosing Security Vulnerabilities at https://selinc.com/security_vulnerabilities/.

Obtaining Updates

The software components included with SEL-3300 devices can be sorted into the following categories: BIOS/UEFI, firmware, operating systems, device drivers and software, and application software. Each component is owned and maintained by either the device manufacturer (SEL) or the component manufacturer (third-party). Some third-party components, like device drivers, can be sourced from either the third-party or SEL, while other third-party components, like Microsoft Windows operating system updates, can only be sourced from the third-party, not from SEL.

When a component sourced from SEL has a new release available, if the release corrects an issue that has a significant customer impact or is a security vulnerability, then end-users will be notified by SEL via Service Bulletin. SEL also provides a security notifications service that will alert you of any security-related updates to the SEL components in your SEL devices, which you can sign up for at https://selinc.com/support/security-notifications/.

BIOS/UEFI and Firmware

All BIOS and firmware updates for SEL-3300 devices must be sourced from SEL. Updates to these are infrequent, with typically one to two releases each year when the product is new, and less frequent as the product matures.

Table B.3 BIOS/UEFI and Firmware

Component	Sources	Examples
SEL BIOS/UEFI	➤ https://selinc.com/products/3350/support/ ➤ https://selinc.com/products/3355/support/ ➤ https://selinc.com/products/3360/support/ ➤ SEL Compass software (https://selinc.com/products/compass/)	➤ SEL-3350 BIOS Update ➤ SEL-3355 BIOS Update ➤ SEL-3360 BIOS Update
SEL Embedded Controller Firmware (SEL-3355/SEL-3360 only)	➤ https://selinc.com/products/3355/support/ ➤ https://selinc.com/products/3360/support/ ➤ SEL Compass software (https://selinc.com/products/compass/)	➤ SEL B2071 Firmware Update
Intel Management Engine Firmware (SEL-3355/SEL-3360 only)	➤ https://selinc.com/products/3355/support/ ➤ https://selinc.com/products/3360/support/ ➤ SEL Compass software (https://selinc.com/products/compass/)	➤ Intel ME Firmware Update

Operating Systems

Operating system updates must be sourced from the OS manufacturer using their own defined methods. For SEL Blueframe and RTAC OSs, refer to the instruction manuals and documentation for those operating systems. For third-party OSs like Microsoft Windows and Linux, background automatic update services periodically attempt to download updates directly from the internet. Devices with no internet access can usually update the OS using offline update packages that can be downloaded and transferred to the device using an internet-connected computer. Your company IT/IS group may be able to assist you with setting up automatic or offline OS updates.

Device Drivers and Software

Device drivers and software can be sourced from either SEL or the component manufacturer, depending on end-user preference. The component manufacturer will have the most recent releases, but these releases may not have been tested by SEL, so you should consider testing to confirm the new driver does not introduce new problems. SEL tests third-party drivers in-house before releasing, and as such the releases are delayed and less frequent. The table below lists the device drivers and software in current production SEL-3300 devices and the source for where you can obtain the latest releases. To obtain drivers and software for discontinued SEL-3300 devices, refer to **Computing Platforms > Discontinued Computing Platforms** at https://selinc.com/products/.

Table B.4 Device Drivers and Software

Component	Sources	Examples
Intel device drivers and software	➤ https://selinc.com/products/3355/support/ ➤ https://selinc.com/products/3360/support/ ➤ SEL Compass software (https://selinc.com/products/compass/) ➤ https://downloadcenter.intel.com/	➤ Intel Chipset utility ➤ Intel SATA Controller driver ➤ Intel Rapid Storage Technology software ➤ Intel Ethernet driver ➤ Intel Graphics driver ➤ Intel Management Engine driver
SEL Mainboard device drivers	➤ https://selinc.com/products/3350/support/ ➤ https://selinc.com/products/3355/support/ ➤ https://selinc.com/products/3360/support/ ➤ SEL Compass software (https://selinc.com/products/compass/)	➤ SEL 3300 Driver Bundle ➤ SEL B2071 Driver ➤ SEL B2071 System Control Library

Component	Sources	Examples
SEL SysMon software	➤ https://selinc.com/products/3350/support/ ➤ https://selinc.com/products/3355/support/ ➤ https://selinc.com/products/3360/support/ ➤ SEL Compass software (https://selinc.com/products/compass/)	➤ SEL Alarm Service ➤ SEL SysMon GUI ➤ SEL SysMon Service ➤ SEL SysMon SNMP Agent Extension
SEL-3390 PCIe card drivers	➤ https://selinc.com/products/3390E4/ ➤ https://selinc.com/products/3390S8/ ➤ https://selinc.com/solutions/rugged-computers/ ➤ https://selinc.com/products/3390T/ ➤ SEL Compass software (https://selinc.com/products/compass/)	➤ SEL 3300 Driver Bundle ➤ SEL-3390E4 Driver ➤ SEL-3390S8 Driver

Application Software

Most application software updates should be sourced from the software manufacturer. The exceptions to this are the following optional software packages that can be factory-installed on SEL-3300 devices.

Table B.5 Application Software

Component	Sources	Examples
McAfee Embedded Control	https://selinc.com/software/downloads/?filter=mcafee	

Update Verification

Updates for SEL-3300 devices are packaged as signed executable files for Microsoft Windows OSs (.exe files). The file signature can be verified by copying the file to a computer running Microsoft Windows and reviewing the Digital Signatures tab of the Properties display for the executable file. Microsoft and other vendors usually also use these digital signatures for updates, so the same verification method used for SEL updates can be used for most other updates intended to be used with Windows OSs.

Depending on the type of update, the components processing the update might automatically verify the update's digital signature before allowing the update to proceed. BIOS/UEFI updates files are digitally signed by SEL, and that signature is verified by the update processes built into the BIOS/UEFI during the update process. If the signature verification fails, the update will not be applied. SEL RTAC and Blueframe OSs also use signature verification for firmware and OS updates. Refer to the instruction manuals and documentation for those operating systems for additional information.

Contact SEL

For further questions or concerns about product security, contact SEL at security@selinc.com or +1.509.332.1890.

This page intentionally left blank

Glossary

10/100/1000BASE-T Part of the IEEE 802.3 Ethernet communication standards, referring to device connections using twisted-pair cable (as opposed to other media such as coaxial or fiber optics). The number (10, 100, 1000) denotes the link speed in Megabits per second (Mbps), while the BASE-T denotes the twisted-pair cable.

A abbreviation for amperes; unit of electrical current flow.

ac abbreviation for alternating current.

BIOS Basic Input/Output System. System software that provides the most basic interface to peripheral devices and controls the first stage of the boot process, including operating system installation.

Burden Percentage of time during which the CPU is working.

CPU Central processing unit.

CTS Clear to Send. EIA-232 control signal, typically used for data flow control.

dc Abbreviation for direct current.

DCD Data Carrier Detect. EIA-232 control signal, typically used by a modem to indicate a data carrier signal is present.

DSR Data Set Ready. EIA-232 control signal, typically used by a modem to indicate it is ready to receive data.

DTR Data Terminal Ready. A wire in an EIA-232 connection that tells data communications equipment (typically a modem) that the computer or terminal is ready to transmit and receive data.

EIA-232 Electrical definition for point-to-point serial data communications interfaces, based on the standard EIA/TIA-232. Formerly known as RS-232.

EIA-422 Electrical serial line standard which specifies four-wire, full-duplex, differential line, multidrop communications.

EIA-485 Electrical serial line standard which specifies two-wire, half-duplex differential line, multipoint communications. Formerly known as RS-485.

EMI Electromagnetic Interference.

ESD Electrostatic discharge. The sudden transfer of charge between objects at different potentials caused by direct contact or induced by an electrostatic field.

Ethernet A network physical and data link layer defined by IEEE 802.2 and IEEE 802.3.

Firmware The nonvolatile program stored in the relay that defines relay operation.

GND Ground.

GPS Global Positioning System. Source of position and high-accuracy time information.

HDD Hard disk drive (or hard drive).

HMI Human-machine interface.

IRIG-B A time-code input that the relay can use to set the internal relay clock.

LED Light-Emitting Diode. Used as indicators on the SEL-3350 front panel.

MAC Address The hardware address of a device connected to a shared network medium.

MOV Metal-Oxide Varistor.

PC Personal Computer.

Peak Common Mode Maximum voltage between a signal line and common (ground).

Peak Differential Mode Maximum voltage between two signal lines.

Ping Packet InterNet Grouper. A program that tests the ability to communicate with a remote device by sending one, or repeated, echo requests to a remote location and waiting for replies. The term is also used as a verb to indicate the action of sending signals to and receiving echoes from remote devices.

Pinout The definition or assignment of each electrical connection at an interface. Typically refers to a cable, connector, or jumper.

Protocol A language for communication between devices.

RAM Random-Access Memory.

RF Radio Frequency.

RTS Request to Send. EIA-232 control signal, typically used for data flow control.

RXD Received data.

SATA Serial Advanced Technology Attachment or Serial ATA is an interface used to connect ATA storage devices to the computer's CPU or chipset.

SCADA Supervisory Control and Data Acquisition.

TTL Transistor-Transistor Logic. A term originating with Texas Instruments describing a common semiconductor technology for building discrete digital logic integrated circuits.

TXD Transmitted data.

UEFI Unified Extensible Firmware Interface.

V Abbreviation for volts; unit of electromotive force.

W Abbreviation for watts; unit of electrical power.

SCHWEITZER ENGINEERING LABORATORIES, INC.
2350 NE Hopkins Court • Pullman, WA 99163-5603 U.S.A.
Phone: +1.509.332.1890 • Fax: +1.509.332.7990
selinc.com • info@selinc.com