SEL-T400L

Ultra-High-Speed Transmission Line Relay
Traveling-Wave Fault Locator
High-Resolution Event Recorder

Instruction Manual

20241220
Firmware R104

SEL SCHWEITZER ENGINEERING LABORATORIES

© 2017–2024 by Schweitzer Engineering Laboratories, Inc. All rights reserved.

Content subject to change without notice. Unless otherwise agreed in writing, all SEL product sales are subject to SEL's terms and conditions located here: https://selinc.com/company/termsandconditions/.

Part Number: PMT400L-01

Letter From the SEL President

The SEL-T400L is four to ten times faster than today's best relays. It's like moving from a car to a jet plane! The T400L works alongside your phasor-based relays, providing faster tripping and fantastic monitoring and event recording. You can expect tripping times on the order of 1–4 milliseconds for most faults, compared to 10–20 milliseconds for phasor-based relays. Saving 12 milliseconds or more means improved stability, better safety, and less damage when faults do occur. And, we have designed the T400L to give us the speed when it is possible, but with no loss in security.

The T400L works in time domain using incremental quantities and traveling-wave principles, some of which have been tried before, and many of which are new to the T400L…making it the first true traveling-wave microprocessor-based relay. Why now? First, there's the need at all voltage levels for faster tripping, as we are more concerned about safety and stability, especially with the increase of rapidly changing energy flows from intermittent sources. Next, we now have the technology and know-how to do it.

New technology in the T400L includes 18-bit A/D converters with megahertz sampling rates. Their performance is magnificent, and their size, power consumption, and price are low enough for us to use one on each channel. We are also putting to work new digital signal processing hardware that can always keep up with the significant processing requirements, with room to spare, while being practical, affordable, reliable, and efficient. The T400L consumes about the same amount of control power as a conventional relay, and maintains an outstanding –40° to +85°C operating temperature range.

We've learned a lot, making microprocessor relays and fault locators for over 30 years. That experience or know-how, along with more recent traveling-wave fault-locating experience and specific developments for the T400L, bring it to life with confidence.

New developments in the T400L, including the world's first traveling-wave differential elements, and the EMI monitoring, provide us the speed we want and the security we need. We developed them by going back to "first principles," implementing and testing them, and then refining them.

Other exciting developments build more directly on our experience: millisecond MIRRORED BITS communications—*four times faster* than before, dedicated gigabit-speed fiber channels, our high-speed hybrid outputs for very fast tripping, and traveling-wave fault locating that works with information from one or both ends of the line. We're routinely locating faults to less than a tower span.

Every transmission line terminal needs a T400L! Speed is always important, to be sure. And so are analytics. The megahertz sampling with 18 bits of true precision and nanosecond absolute timing give us new eyes into the system. These new eyes open up a new world for us all to see: breaker restrikes, partial breakdown of insulators, self-extinguishing faults and their locations, and perhaps phenomena we haven't thought of yet. The benefits: lower maintenance costs, less damage, hopefully fewer fires, better and faster understanding and improvements, and more-reliable service.

For so many folks at SEL, this is a dream come true, me included. Compared to where we started in 1984, today we are sampling 4,000 times faster and 64 times more precisely; we're tripping in milliseconds and thinking in microseconds and nanoseconds. And, we're learning and solving new problems.

As significant an advancement as we feel this is, this is just the beginning! We look forward to working together, as we move time-domain protection and megahertz oscillography from dreams into realities and as we advance the protection, control, automation, fault locating, and monitoring, together.

Edmund O. Schweitzer, III Ph.D.

Table of Contents

Letter From the SEL President 1

List of Tables v

List of Figures ix

Preface xv

Overview xv
Safety Information xviii
General Information xxi

Section 1: Introduction and Specifications

Features 1.3
Applications 1.9
Specifications 1.12

Section 2: Protection Elements and Schemes

Introduction 2.1
Configuration Settings Shared Among Multiple Relay Functions 2.3
Arming Logic 2.8
Starting Logic 2.9
Traveling-Wave Disturbance Detectors 2.12
Fault-Type Identification Logic 2.13
Incremental-Quantity Directional Element 2.13
Incremental-Quantity Distance Element 2.17
Overcurrent Supervision Elements 2.22
Traveling-Wave Directional Element 2.27
Traveling-Wave Differential Scheme 2.31
Loss-of-Potential Logic 2.42
Open-Pole Detection Logic 2.43
Trip Logic 2.45
ARMED LED Target Logic 2.60

Section 3: Protection Communications Channels

Introduction 3.1
Overview of Protection Inputs and Outputs 3.2
MIRRORED BITS Communications 3.5
Direct Point-to-Point Fiber-Optic Channel 3.17
Typical Protection Signaling Applications 3.22

Section 4: Fault Locator and Line Monitor

Introduction 4.1
Fault Locator Application and Settings 4.3
Fault Locator Trigger and Data Collection 4.4
Double-Ended Traveling-Wave-Based Method 4.6
Single-Ended Traveling-Wave-Based Method 4.9
Single-Ended Impedance-Based Method 4.10
Double-Ended Impedance-Based Method 4.12
Selecting and Reporting Best Fault Location Results 4.13
Adaptive Autoreclose Cancel Logic 4.14
Fault Locating on Multiterminal Lines 4.17
Line Monitoring Logic 4.18

Section 5: Fault and Event Recording

Digital Fault Recording 5.1
Sequential Event Recording....5.18
Report Records 5.21
Analyzing Events With SYNCHROWAVE Event Software 5.22

Section 6: Settings Guidelines

Device Configuration Settings....6.2
AC Inputs and Line Configuration Settings 6.5
Protection Settings 6.11
Fault Locator Settings....6.22
Reports Settings 6.25
Current Transformer Requirements 6.29

Section 7: Protection Applications Examples

Overview....7.1
Example 1. Two-Terminal Overhead Transmission Line 7.1
Example 2. Two-Terminal Series-Compensated Overhead Transmission Line....7.11
Example 3. CT Selection 7.19

Section 8: Engineering and Operator Access Interfaces and Tools

Introduction....8.1
Front-Panel Operations 8.4
PC Software 8.14
SEL ASCII Command Language 8.33
Access Control and Passwords 8.35
Settings Structure....8.38
Communications Setup 8.42

Section 9: SCADA and HMI Protocols

Introduction....9.1
DNP3 LAN/WAN Protocol 9.3
File Transfer Protocol 9.4
Telnet Protocol....9.6
Fast Time-Domain Values 9.7
SEL Compressed ASCII Commands....9.9
SEL Fast Meter and SEL Fast SER Protocols 9.15
Recommended Use of Compressed ASCII and Fast Message Commands for Automatic Configuration 9.16
SEL-T400L File Directories 9.17
Cybersecurity Features 9.21

Section 10: Installation

Environment and Mounting 10.1
Connections 10.3
Communications Interfaces 10.7
AC/DC Connection Diagrams 10.17
Accessing and Configuring Relay Jumpers 10.18
Inspecting the Relay....10.21
Replacing the SD Card 10.25
Cleaning Recommendations 10.25
Replacing the Lithium Battery....10.25

Section 11: Testing and Commissioning

Introduction to SEL-T400L Testing 11.2
Testing With Incremental Currents and Voltages....11.5
Testing With Traveling Waves 11.23
Event Playback Testing 11.39
Basic Relay Inspection and Tests 11.48
Measuring Line Propagation Time During Line Energization Test 11.50

Appendix A: Firmware and Manual Versions

Firmware A.1
SELBOOT A.7
Instruction Manual A.8

Appendix B: Firmware Upgrade Instructions

SEL-T400L Firmware Revision Convention B.1
Preparing for Firmware Upgrade Prior to Work on Site B.2
Preparing for Firmware Upgrade on Site B.5
Upgrading Firmware Through Use of ACSELERATOR QuickSet Firmware Loader B.7
Upgrading Firmware Through Use of a Terminal Emulator B.15
Troubleshooting Firmware Upgrade Problems B.21
Technical Support B.22

Appendix C: SEL ASCII Commands

Introduction C.1
SEL ASCII Command Reference C.1
The Common Header in Reports Generated by SEL ASCII Commands C.4
Description of Commands C.5

Appendix D: Relay Word Bits

Appendix E: Analog Quantities

Introduction E.1
Ultra-High-Resolution Fault Record E.1
High-Resolution Fault Record E.3
Metering Quantities E.4
Analog Quantities Available Via SEL Fast Meter Protocol E.5
Analog Quantities Related to Events E.6

Appendix F: Diagnostics

Introduction F.1
Diagnostic Status Reporting F.2
SEL-T400L Diagnostic Details and Remediation Steps F.3

Appendix G: Signal Processing

Appendix H: High-Accuracy Timekeeping

IRIG-B Time Input H.1
Timekeeping When Using Port 6 Channel H.4
Inspecting the Timekeeping System H.5
TIME Q Report H.5

Appendix I: Distributed Network Protocol

DNP3 Configuration I.1
DNP3 Capabilities Overview I.10

SEL-T400L Relay Command Summary

This page intentionally left blank

List of Tables

Table 1.1 ANSI Numbers/Acronyms and Functions 1.4
Table 1.2 Additional Functions 1.5
Table 1.3 Protection Application Highlights 1.9
Table 1.4 Fault-Locating Application Highlights 1.11
Table 1.5 Event-Recording Application Highlights 1.11
Table 2.1 AC Input Configuration Settings 2.4
Table 2.2 Line Configuration Settings 2.5
Table 2.3 Arming Logic Relay Word Bits 2.9
Table 2.4 Starting Logic Relay Word Bits 2.11
Table 2.5 Disturbance Detectors Relay Word Bits 2.12
Table 2.6 Fault-Type Identification Logic Relay Word Bits 2.13
Table 2.7 TD32 Element Relay Word Bits 2.16
Table 2.8 TD32 Element Settings 2.16
Table 2.9 TD21 Element Relay Word Bits 2.21
Table 2.10 TD21 Element Settings 2.21
Table 2.11 Overcurrent Supervision Relay Word Bits 2.25
Table 2.12 Overcurrent Supervision Settings 2.26
Table 2.13 TW32 Element Relay Word Bits 2.30
Table 2.14 TW87 Scheme Relay Word Bits 2.40
Table 2.15 TW87 Scheme Settings 2.41
Table 2.16 LOP Relay Word Bits 2.43
Table 2.17 Open-Pole Relay Word Bits 2.44
Table 2.18 Open-Pole Settings 2.44
Table 2.19 Relay Word Bits Related to Trip Logic 2.56
Table 2.20 Settings Related to POTT, DTT, and Trip Logic 2.57
Table 2.21 Troubleshooting Unexpected ARMED LED States 2.61
Table 3.1 MIRRORED BITS Assignments 3.2
Table 3.2 MIRRORED BITS Assignments for POTT and DTT Applications With an SEL-T400L 3.6
Table 3.3 MIRRORED BITS Assignments for Breaker Failure and Autoreclose Applications With an SEL-T400L as the Line Relay 3.7
Table 3.4 MIRRORED BITS Ports 1, 2, and 3 Settings 3.7
Table 3.5 MIRRORED BITS Transmission Intervals 3.9
Table 3.6 Error Conditions Monitored in MIRRORED BITS Communications 3.10
Table 3.7 Information Included in the COM Report 3.12
Table 3.8 Suggested Settings for SEL-T400L and SEL-2507 MIRRORED BITS Communications 3.16
Table 3.9 Port 6 Settings 3.17
Table 3.10 Fiber-Optic System Loss Calculation for a 150 km Link 3.19
Table 3.11 Port 6 Transceivers Distance and Recommended Cable Type 3.19
Table 3.12 Information Included in the COM TW87 Report 3.21
Table 4.1 Fault Locator Settings 4.3
Table 4.2 Effect of Abnormal Conditions on SEL-T400L Fault-Locating Methods 4.13
Table 4.3 Autoreclose Cancel Logic Settings 4.16
Table 4.4 Autoreclose Cancel Logic Relay Word Bits 4.16
Table 4.5 Line Monitor Settings 4.19
Table 4.6 Line Monitor Relay Word Bits 4.22
Table 4.7 Line Monitor Analog Values 4.22
Table 5.1 Information Included in the CFG File 5.4
Table 5.2 Information Included in the HDR File 5.6
Table 5.3 Event Reporting Settings 5.9
Table 5.4 Information Included in the SUMMARY Report 5.11
Table 5.5 Information Included in the HISTORY Report 5.13
Table 5.6 Event Storage Capacity 5.14
Table 5.7 Event Retrieval Methods and Their Supported Protocols 5.15

Table 5.8 File Transfer Method Download Times for TDR and MHR Records With LER = 0.2 s 5.18
Table 5.9 FTP Download Times for TDR and MHR Records of Various Lengths 5.18
Table 5.10 Information Included in the SER Report 5.19
Table 5.11 SER Points and Chatter Criteria Settings 5.21
Table 6.1 General Settings 6.3
Table 6.2 SER1 Default Settings With Comments 6.26
Table 6.3 SER2 Default Settings With Comments 6.26
Table 6.4 SER3 Default Settings With Comments 6.26
Table 6.5 SER4 Default Settings With Comments 6.27
Table 6.6 ER Default Settings With Comments 6.28
Table 6.7 Frequently Used ER Triggers and Their Applications 6.29
Table 7.1 General Setting 7.2
Table 7.2 Power System, AC Inputs 7.2
Table 7.3 Power System, Line Configuration 7.2
Table 7.4 General Setting 7.12
Table 7.5 Power System, AC Inputs 7.12
Table 7.6 Power System, Line Configuration 7.12
Table 8.1 Typical Engineering and Operator Tasks and How to Accomplish Them With the SEL-T400L 8.2
Table 8.2 Navigation Pushbutton Functions 8.5
Table 8.3 Available LCD Metering Values 8.7
Table 8.4 Available Event Data 8.8
Table 8.5 Available LCD Status Data 8.9
Table 8.6 Front-Panel Status and Target LEDs 8.11
Table 8.7 Selected ASCII Control Characters 8.35
Table 8.8 SEL-T400L Access Levels 8.36
Table 8.9 Access Level Commands and Default Passwords 8.36
Table 8.10 SEL-T400L Settings Structure in QuickSet 8.38
Table 8.11 View and Set SEL-T400L Settings Classes and Instances 8.39
Table 8.12 Actions at Settings Prompts 8.41
Table 8.13 Port F Settings 8.46
Table 8.14 Port 5 Settings 8.47
Table 8.15 Information Included in the ETHERNET Report 8.51
Table 9.1 SEL-T400L Ports, Protocols, and Applications 9.2
Table 9.2 Port 5 Settings Related to the DNP Protocol 9.3
Table 9.3 FTP Settings for Port 5 .....9.4
Table 9.4 Telnet Settings for Port 5 .....9.6
Table 9.5 Settings for FTDV Streaming 9.8
Table 9.6 SEL Compressed ASCII Commands 9.9
Table 9.7 Information included in the CHISTORY Report 9.13
Table 9.8 Diagnostic Information Included in the CSTATUS Report 9.14
Table 9.9 SEL Fast Meter Binary Message List 9.15
Table 9.10 Fast Message Command Function Codes Used With Fast Messages (A546 Message) and Relay Response Descriptions 9.16
Table 9.11 Commands in Recommended Sequence for Automatic Configuration 9.17
Table 9.12 SETTINGS Directory Files 9.18
Table 9.13 REPORTS Directory Files 9.20
Table 9.14 DIAGNOSTICS Directory Files 9.21
Table 9.15 Relay Word Bits for Monitoring Potential Cybersecurity Threats 9.22
Table 10.1 Internal Power Supply Fuse Information 10.4
Table 10.2 Function Assigned to Contact Outputs 10.5
Table 10.3 Communications Ports and Their Applications 10.7
Table 10.4 Ports 5 and 6 Transceivers Distance and Recommended Cable Type 10.14
Table 10.5 BREAKER and PASSWORD Jumpers 10.20
Table 10.6 Information Included in the VERSION Report 10.24
Table 11.1 Sample Relay Settings for Illustration of Test Signals 11.7
Table 11.2 Prefault Test Signals 11.8

Table 11.3 Prefault, Incremental, and Fault Signals for Testing TP50G With a Multiple of Pickup of 1.5 ..... 11.9
Table 11.4 Prefault, Incremental, and Fault Signals for Testing TP50P With a Multiple of Pickup of 1.5 ..... 11.11
Table 11.5 Prefault, Incremental, and Fault Signals for Testing TP67G With a Multiple of Pickup of 1.5 ..... 11.13
Table 11.6 Prefault, Incremental, and Fault Signals for Testing TP67G in Series-Compensated Applications With a Multiple of Pickup of 1.5 ..... 11.13
Table 11.7 Prefault, Incremental, and Fault Signals for Testing TP67P With a Multiple of Pickup of 1.5 ..... 11.14
Table 11.8 Prefault, Incremental, and Fault Signals for Testing TP67P in Series-Compensated Applications With a Multiple of Pickup of 1.5 ..... 11.14
Table 11.9 Prefault, Incremental, and Fault Signals for Testing TD32ZF With a Multiple of Pickup of 2 ..... 11.15
Table 11.10 Prefault, Incremental, and Fault Signals for Testing TD32ZR With a Multiple of Pickup of 2 ..... 11.16
Table 11.11 Prefault, Incremental, and Fault Signals for Testing TD21MG for a Fault Location 30 Percent Short of the Reach 11.18
Table 11.12 Prefault, Incremental, and Fault Signals for Testing TD21MP for a Fault Location 30 Percent Short of the Reach 11.19
Table 11.13 Prefault, Incremental, and Fault Signals for Testing POTT for a Forward Fault 11.20
Table 11.14 Prefault, Incremental, and Fault Signals for Testing POTT for a Reverse Fault 11.21
Table 11.15 Prefault, Incremental, and Fault Signals for Testing Double-Ended Impedance-Based Fault Locating in Relay 1 (Fault at 75 Percent of Line Length From Relay 1) 11.22
Table 11.16 Prefault Test Signals for Relay 2 ..... 11.22
Table 11.17 Prefault, Incremental, and Fault Signals for Testing Double-Ended Impedance-Based Fault Locating in Relay 2 (Fault at 25 Percent of Line Length From Relay 2) 11.23
Table 11.18 Recommended Current TW Magnitudes for Testing Internal Faults 11.26
Table 11.19 Recommended Current TW Magnitudes for Testing External Faults 11.28
Table A.1 Firmware Revision History A.2
Table A.2 SELBOOT Revision History A.7
Table A.3 Instruction Manual Revision History A.8
Table B.1 Firmware Upgrade Files B.3
Table C.1 SEL ASCII Command Reference C.1
Table C.2 Information Included in the SEL ASCII Report Header Lines C.4
Table C.3 2AC Command C.5
Table C.4 ACC Command C.6
Table C.5 BAC Command C.6
Table C.6 CAL Command C.6
Table C.7 COM Command C.6
Table C.8 COM TW87 Command C.7
Table C.9 DAT Command C.7
Table C.10 ETH Commands C.7
Table C.11 EXI Command C.7
Table C.12 FILE Command C.8
Table C.13 HIS Command C.8
Table C.14 L_D Command C.9
Table C.15 LIMO Command C.9
Table C.16 LOOP Command C.9
Table C.17 LOOP DATA Command C.10
Table C.18 LOOP R Command C.10
Table C.19 MAC Command C.10
Table C.20 MET Command C.11
Table C.21 PAS Command C.11
Table C.22 PLA Command C.12
Table C.23 PUL *m* Command C.12
Table C.24 QUIT Command C.13
Table C.25 R_S Command C.13

Table C.26 SER Command C.13
Table C.27 Factory-Set SER Events C.14
Table C.28 SET Command C.15
Table C.29 TERSE Option Examples C.15
Table C.30 SET C Command C.16
Table C.31 SHO Command C.16
Table C.32 STA Command C.16
Table C.33 SUM Command C.17
Table C.34 TAR Command C.17
Table C.35 TEST DB2 Command C.18
Table C.36 TIM Command C.19
Table C.37 TRI Command C.19
Table C.38 TWT Command C.20
Table C.39 VEC Command C.20
Table C.40 VER Command C.20
Table C.41 BNA Command C.21
Table C.42 CAS Command C.21
Table C.43 CHI Command C.21
Table C.44 CST Command C.21
Table C.45 DNA Command C.22
Table C.46 ID Command C.22
Table C.47 SNS Command C.22
Table D.1 Relay Word Bits D.1
Table E.1 Current and Voltage Signals in the MHR Report E.2
Table E.2 Current and Voltage Signals Available in the TDR Report E.3
Table E.3 Metering Values Available on Front-Panel HMI, QuickSet HMI, and Via SEL ASCII MET Command E.4
Table E.4 Analog Quantities Available Via SEL Fast Meter Protocol E.6
Table E.5 Event-Related Analog Quantities Available on Front-Panel HMI, Via SEL ASCII HIS and SUM Commands, in the COMTRADE .HDR Files and Via the DNP3 LAN/WAN Protocol E.6
Table F.1 Alarm Relay Word Bits F.1
Table F.2 Diagnostic Messages and Action Items F.4
Table G.1 Analog Filter and ADC Diagnostics Relay Word Bits G.3
Table G.2 Electromagnetic Interference Monitoring Relay Word Bits G.7
Table G.3 Measured and Derived 10 kHz Quantities G.10
Table G.4 Loop Incremental Voltages and Replica Currents G.10
Table G.5 Loop Currents and Voltages Represented by Phasors in a Steady State G.11
Table H.1 SEL-T400L Timekeeping Modes and Sources H.2
Table H.2 IRIG Signal Time Quality Encoding Per IEEE C38.118-2005 ..... H.3
Table H.3 Relay Word Bits Associated With Precision Timekeeping System H.3
Table H.4 Information Included in the TIME Q Report H.6
Table H.5 Last Updated Sources H.6
Table I.1 Summary of the SEL-T400L DNP3 Capabilities I.1
Table I.2 DNP Master Settings I.2
Table I.3 DNP Map Settings I.3
Table I.4 DNP3 Default Data Map I.3
Table I.5 DNP3 Reference Data Map I.5
Table I.6 DNP3 Access Methods I.11
Table I.7 DNP3 Event Buffer Capacity I.11
Table I.8 Relay Object 12 Acknowledgment and Data Housekeeping (Control) Operations I.12
Table I.9 Object 30, 32, FTYPE Upper Byte-Event Cause I.13
Table I.10 Object 30, 32, FTYPE Lower Byte-Affected Phase(s) I.13
Table I.11 DNP3 Object List I.15

List of Figures

Figure 1.1 SEL-T400L Functional Overview 1.4
Figure 1.2 TD21 Element Median Operating Time for Varying Fault Location and Different Source-to-Line Impedance Ratios 1.5
Figure 1.3 POTT Operating Time as a Function of Fault Location for Different Line Lengths Assuming TW32 Keying and a 115,200 bps MIRRORED BITS Channel With SEL MB8 Encoding Over Fiber-Based SONET/SDH 1.6
Figure 1.4 TW87 Scheme Operating Time as a Function of Line Length 1.7
Figure 1.5 TD50/67 Operating Time as a Function of Multiple of Pickup (Range and Median) 1.7
Figure 2.1 Overview of the SEL-T400L Protection Logic 2.2
Figure 2.2 Arming Logic Simplified Diagram 2.9
Figure 2.3 Starting Logic Principle of Operation 2.10
Figure 2.4 Faulted-Loop Identification Logic 2.10
Figure 2.5 Starting and Time-Out Logic 2.11
Figure 2.6 TD50DH Disturbance Detection Logic 2.11
Figure 2.7 TW Disturbance Detection Simplified Diagram 2.12
Figure 2.8 TD32 Operating Principle: (a) Forward- and (b) Reverse-Fault Conditions 2.14
Figure 2.9 TD32 Simplified Logic Diagram (AG Loop Shown) 2.15
Figure 2.10 TD21 Operating Principle 2.18
Figure 2.11 Effective Operating Region of the TD21 Element: (a) Voltage Collapse During a Legitimate Fault, and (b) Voltage Increase Resulting From a Switching Event 2.19
Figure 2.12 Effective Operating Region of the TD21 Element for Applications With External Series Capacitors 2.19
Figure 2.13 TD21 Simplified Logic Diagram (AG Loop Shown) 2.20
Figure 2.14 Incremental Replica Current and Its Integral Over Time 2.23
Figure 2.15 Overcurrent Element Principle of Operation 2.23
Figure 2.16 Overcurrent Element Simplified Logic Diagram (AG Loop Shown) 2.24
Figure 2.17 Adaptive OCTP Pickup Threshold Depending on the Line Loading 2.25
Figure 2.18 TW32 Operating Principle: (a) Forward Fault, and (b) Reverse Fault 2.28
Figure 2.19 Simplified TW32 Logic Diagram 2.30
Figure 2.20 TW87 Operating Principle: (a) Fault Locations, (b) TWs for an External Fault, and (c) TWs for an Internal Fault 2.32
Figure 2.21 TW87 Voltage Polarization Principle 2.34
Figure 2.22 Three Implementation Stages of the TW87 Scheme 2.35
Figure 2.23 TW87 Data Collection Process (1 µs Processing) 2.37
Figure 2.24 TW87 Traveling-Wave Current Level Supervision Logic 2.38
Figure 2.25 TW87 Fault Location Logic 2.38
Figure 2.26 TW87 Restraining Logic 2.39
Figure 2.27 TW87 Supervisory Logic 2.40
Figure 2.28 TW87 Fault-Type Identification Principle: (a) AG Fault, and (b) BC Fault 2.40
Figure 2.29 Illustration of the TW87 Blocking Location and Radius Settings 2.41
Figure 2.30 LOP Logic Diagram 2.43
Figure 2.31 Open-Pole Logic Diagram 2.44
Figure 2.32 Trip Logic High-Level Overview 2.46
Figure 2.33 POTT Logic High-Level Overview 2.47
Figure 2.34 DTT Logic High-Level Overview 2.48
Figure 2.35 POTT Key Transmitter Logic (Phase A Logic Shown) 2.49
Figure 2.36 POTT Receiver Logic (PTMBA and PTMBTW Logic Shown) 2.50
Figure 2.37 DTT Transmitter Logic 2.52
Figure 2.38 DTT Receiver Logic 2.52
Figure 2.39 Phase Selection and Tripping Logic 2.54
Figure 2.40 Trip-During-Open-Pole Logic 2.55

Figure 2.41 Example POTT Applications....2.59
Figure 3.1 Input and Output Capabilities of the SEL-T400L....3.3
Figure 3.2 MB Port 2 Configured to Interface With an IEEE C37.94-Compliant Multiplexer for Digital Teleprotection....3.5
Figure 3.3 COM Report Data Items for Port Configured for SEL MB8 Encoding....3.11
Figure 3.4 Sample COM Report for Port Configured for SEL MB8 Encoding....3.11
Figure 3.5 COM Report Data Items for Port Configured for IEEE C37.94 Encoding....3.12
Figure 3.6 Sample COM Report for Port Configured for IEEE C37.94 Encoding....3.12
Figure 3.7 Sample COM Report for a MIRRORED BITS Channel on Port 1 During a Loopback Test With Encoding Set to SEL MB8....3.15
Figure 3.8 Sample COM Report for a MIRRORED BITS Channel on Port 1 During a Loopback Test With Encoding Set to IEEE C37.94....3.16
Figure 3.9 Data Items in the COM TW87 Report....3.20
Figure 3.10 Sample COM TW87 Report....3.20
Figure 3.11 Two-Terminal SEL-T400L Application With an IEEE C37.94-Compatible POTT/DTT Channel, Standalone SEL Breaker Failure and Autoreclose Relay, and No Direct Point-to-Point Fiber-Optic Channel....3.23
Figure 3.12 Two-Terminal SEL-T400L Application With a Contact I/O-Based POTT/DTT Channel, Standalone Breaker Failure and Autoreclose Relay, and No Direct Point-to-Point Fiber-Optic Channel....3.23
Figure 3.13 Two-Terminal SEL-T400L Application With a Direct Point-to-Point Fiber-Optic TW87/POTT/DTT Channel and an SEL Backup, Breaker Failure, and Autoreclose Relay....3.24
Figure 3.14 Three-Terminal SEL-T400L Application With a TDM POTT/DTT Channel, Standalone SEL Breaker Failure and Autoreclose Relay, and a Direct Point-to-Point Fiber-Optic Channel Between Terminals 1 and 3....3.25
Figure 3.15 Breaker Failure Protection, Autoreclosing, and Backup Protection Application With Spare SEL-T400L Outputs (Single-Breaker, Single-Pole Tripping Example)....3.25
Figure 3.16 Breaker Failure Protection and Autoreclosing Application With Spare SEL-T400L Outputs (Dual-Breaker, Three-Pole Tripping Example)....3.26
Figure 3.17 Standalone SEL-T400L Fault Locator Application....3.26
Figure 4.1 Fault Locator Overview....4.2
Figure 4.2 Fault Locator Timing Diagram (Not to Scale)....4.4
Figure 4.3 Fault Locator Triggering Logic....4.6
Figure 4.4 Bewley Diagram Explaining Double-Ended TW-Based Fault-Locating Method....4.7
Figure 4.5 Bewley Diagram Explaining Single-Ended TW-Based Fault-Locating Method....4.9
Figure 4.6 Negative-Sequence Voltage Profile Explaining Double-Ended Impedance-Based Fault-Locating Method....4.12
Figure 4.7 Autoreclose Cancel Logic Diagram....4.15
Figure 4.8 Explanation of the Autoreclose Blocking Settings....4.16
Figure 4.9 Multiended TW-Based Fault-Locating Method Explanation for Three-Terminal Lines....4.17
Figure 4.10 LINEMON.TXT File Example....4.23
Figure 5.1 MHR COMTRADE .CFG File Data....5.3
Figure 5.2 TDR COMTRADE .CFG File Data....5.4
Figure 5.3 MHR COMTRADE .HDR File Data....5.6
Figure 5.4 Event Report Triggering Logic....5.8
Figure 5.5 Pretrigger Length in Back-to-Back Recordings....5.9
Figure 5.6 Sample SUMMARY Report....5.11
Figure 5.7 Sample HISTORY Report....5.13
Figure 5.8 Sample SER Report....5.19
Figure 5.9 TDR Record Capturing a Forward A-Phase Fault....5.23
Figure 5.10 MHR Record Capturing a Forward A-Phase Fault – Oscillography....5.25
Figure 5.11 MHR Record Capturing a Forward A-Phase Fault – Oscillography (Zoomed In)....5.27
Figure 5.12 MHR Record Capturing a Forward A-Phase Fault – Bewley Lattice Diagram (Double-Ended Data)....5.29

Figure 5.13 MHR Record Capturing a Forward A-Phase Fault – Bewley Lattice Diagram (Single-Ended Data) 5.31
Figure 6.1 Overview of the SEL-T400L Setting Selection Process 6.2
Figure 6.2 Configuring the AC Inputs 6.6
Figure 6.3 SEL-T400L Line Terminal Configurations 6.7
Figure 6.4 Process of Configuring Line Parameters 6.8
Figure 6.5 Examples of Determining the In-Line Series Compensation Setting 6.9
Figure 6.6 Example of Determining the EXTSC Setting 6.10
Figure 6.7 Example of Both In-Line and External Series Compensation 6.10
Figure 6.8 Protection Settings Selection Process Overview 6.11
Figure 6.9 Example of the Impact of Series Capacitors on the TD32 Impedance Threshold Settings 6.13
Figure 6.10 Configuring the POTT Logic 6.14
Figure 6.11 Configuring the TW87 Scheme 6.19
Figure 6.12 Configuring the Trip Logic 6.20
Figure 6.13 Configuring the Fault Locator and Autoreclose Cancel Logic 6.22
Figure 6.14 Simplified EVNTPKP Logic 6.28
Figure 6.15 Sample Application Showing Fault Locations for Sizing CTs 6.30
Figure 7.1 Single-Breaker Two-Terminal Overhead Transmission Line 7.1
Figure 7.2 Wiring Connections Between the SEL-T400L and an SEL-421 or SEL-411L Relay for AR and BF Functionality 7.10
Figure 7.3 Two-Terminal Midline Series-Compensated Overhead Transmission Line 7.11
Figure 7.4 Example System for Illustrating CT Selection Rules 7.19
Figure 8.1 SEL-T400L Front Panel 8.4
Figure 8.2 LCD Contrast Adjustment 8.5
Figure 8.3 Default Display (Primary kV and A) 8.6
Figure 8.4 Fault Location Message 8.6
Figure 8.5 Menu Navigation Structure 8.6
Figure 8.6 Meter Item Highlighted in the MAIN MENU 8.7
Figure 8.7 Metering Data Example Screen 8.7
Figure 8.8 First Screen of the Events Menu 8.8
Figure 8.9 Relay Status 8.9
Figure 8.10 Front-Panel Status and Target LED Layout 8.11
Figure 8.11 Openings for Front-Panel Configurable Labels 8.14
Figure 8.12 License Agreement 8.15
Figure 8.13 Select the Device Drivers You Want to Install With QuickSet 8.16
Figure 8.14 Available Plugins for Installation With QuickSet 8.17
Figure 8.15 Initial QuickSet Window 8.18
Figure 8.16 Settings Editor Selection 8.20
Figure 8.17 QuickSet Driver Information in the FID String 8.21
Figure 8.18 Settings Editor Screen 8.21
Figure 8.19 Expanded Settings Tree 8.22
Figure 8.20 Select Relay Word Bit TIRIG 8.23
Figure 8.21 Adding Relay Word Bit TIRIG to Setting SER4 ....8.23
Figure 8.22 Select Settings to Open 8.24
Figure 8.23 Specify Groups Check Box 8.25
Figure 8.24 (a) Reading All Settings; (b) Reading Port 1 Settings Only; (c) Transfer Status Window 8.25
Figure 8.25 (a) Send All Settings; (b) Send Report Settings Only 8.25
Figure 8.26 (a) Open a Terminal Window From the Menu; (b) Terminal Window 8.26
Figure 8.27 Terminal Logging Is Enabled 8.27
Figure 8.28 Export Settings to Text 8.28
Figure 8.29 Virtual Relay Front Panel 8.29
Figure 8.30 Control Window 8.30
Figure 8.31 Events Menu 8.30
Figure 8.32 Available COMTRADE Event Reports 8.31
Figure 8.33 Get Event Reports Options 8.31

Figure 8.34 (a) Custom File Names; (b) Default File Names 8.32
Figure 8.35 Event Playback Menu 8.32
Figure 8.36 Access Level Navigation Structure 8.36
Figure 8.37 SEL-T400L Response to the SHO Command (Device/Protection Settings Class) 8.40
Figure 8.38 Line Configuration Settings: (a) in the QuickSet Settings Screen, and (b) Via the SHO Command 8.41
Figure 8.39 Configuring the MIRRORED BITS Port 1 Through Use of the SET Command 8.42
Figure 8.40 Example of Using the TE Parameter in the SET Command (Compare With *Figure 8.39*) 8.42
Figure 8.41 QuickSet Communications Parameters for Port F Access 8.44
Figure 8.42 (a) Communication Working Properly; (b) Communicating With the Device 8.45
Figure 8.43 Selecting the USB Communications Port in the Terminal Emulator 8.45
Figure 8.44 QuickSet Communications Parameters for Port 5 Access 8.49
Figure 8.45 (a) Communication Working Properly; (b) Communicating With the Device 8.50
Figure 8.46 Data Items in the ETHERNET Report 8.50
Figure 8.47 Sample ETHERNET Report 8.50
Figure 8.48 Sample MAC Command Response 8.51
Figure 9.1 Windows Explorer FTP Client Logon Window 9.5
Figure 9.2 SEL-T400L Root Directory 9.6
Figure 9.3 Sample CHISTORY Report 9.12
Figure 9.4 Sample CSTATUS Report 9.13
Figure 9.5 Sample CFG.TXT File 9.18
Figure 10.1 Chassis Dimensions 10.2
Figure 10.2 Front Panel 10.2
Figure 10.3 Rear Panel 10.3
Figure 10.4 Rear-Panel Safety Symbols 10.3
Figure 10.5 Terminals for the Power Supply Connections 10.4
Figure 10.6 Terminal Blocks for PT and CT Inputs 10.4
Figure 10.7 Terminal Blocks for Control Inputs 10.5
Figure 10.8 Terminal Blocks for Six High-Speed, High-Current Interrupting Form A Control Outputs, and One Alarm Form C Output Contact 10.5
Figure 10.9 Alarm Contact Output and Terminal Assignments 10.6
Figure 10.10 Multimode Fiber-Optic Ports With ST Connectors 10.7
Figure 10.11 SEL-T400L MIRRORED BITS Assignment and Usage Philosophy (SEL-T400L as a Sending and Receiving Relay) 10.8
Figure 10.12 SEL-T400L MIRRORED BITS Assignment and Usage Philosophy (SEL-T400L Receiving MIRRORED BITS From an SEL Relay With Programmable MIRRORED BITS) 10.8
Figure 10.13 POTT and DTT Application Using SEL-8000 ICON Multiplexers 10.9
Figure 10.14 POTT and DTT Application Using IEEE C37.94-Compliant Multiplexers 10.10
Figure 10.15 POTT and DTT Application Using Generic Multiplexers 10.10
Figure 10.16 POTT and DTT Application Using Power Line Carrier 10.11
Figure 10.17 Communication With a MIRRORED BITS-Compatible Protection Device 10.12
Figure 10.18 Communication With a Generic Protection Device Using Contact I/Os 10.13
Figure 10.19 Ports 5 and 6 With SFP Transceivers Installed 10.13
Figure 10.20 (a) SFP Without Plug, and (b) SFP With Plug Inserted 10.14
Figure 10.21 (a) SFP About to be Inserted, (b) Installed SFP, and (c) Ready for Cable 10.15
Figure 10.22 Fiber-Optic Cable With LC Connectors 10.15
Figure 10.23 (a) Properly Inserted Cable, and (b) Ready to Remove SFP 10.15
Figure 10.24 BNC Connector 10.16
Figure 10.25 Typical IRIG-B Application Example 10.16
Figure 10.26 Typical AC/DC Connections—Single Circuit Breaker Line Termination 10.17
Figure 10.27 Typical AC/DC Connections—Double Circuit Breaker Line Termination 10.18
Figure 10.28 Location of the Jumper Header on the SEL-T400L Top Printed Circuit Board (Top View) 10.19
Figure 10.29 Jumper Header Location on the Top Printed Circuit Board (Front View) and BREAKER and PASSWORD Jumper Positions in the Jumper Header 10.20

Figure 10.30 SEL-T400L Serial Number Label 10.22
Figure 10.31 Status Report for a Healthy Relay (Response to the STATUS Command) 10.23
Figure 10.32 Data Items in the VERSION Report....10.23
Figure 10.33 Sample VERSION Report 10.24
Figure 11.1 User Interface of a Popular Relay Test Set Software Applying Test Signals of *Table 11.3*....11.9
Figure 11.2 Test Voltages and Currents, AG-Loop Incremental Voltage and Incremental Replica Current, and Relevant Relay Word Bits for the Test Signals of *Table 11.3* 11.10
Figure 11.3 Test Voltages and Currents, AB-Loop Incremental Voltage and Incremental Replica Current, and Relevant Relay Word Bits for the Test Signals of *Table 11.4* 11.12
Figure 11.4 SEL-T4287 Traveling-Wave Test System 11.24
Figure 11.5 Configuration for Bench-Testing the TW87 Scheme and the Double-Ended TW-Based Fault-Locating Method 11.25
Figure 11.6 Injected Currents and Relay Word Bits Associated With the TW87 Scheme for an Internal AG Fault 11.27
Figure 11.7 Injected Currents for an External AG Fault....11.29
Figure 11.8 Configuration for End-to-End Testing of the TW87 Scheme and the Double-Ended TW-Based Fault-Locating Method 11.30
Figure 11.9 Voltage Module External Connection Points for Test Leads and Internal Connections of Resistors 11.33
Figure 11.10 SEL-T4287 Configuration for Testing the TW32 Element....11.33
Figure 11.11 Connections for Generating Voltage TWs for Forward Faults 11.34
Figure 11.12 Injected Currents, Voltages, and TW32 Element Operation for a Forward AG Fault 11.35
Figure 11.13 Connections for Generating Voltage TWs for Reverse Faults 11.35
Figure 11.14 Injected Currents, Voltages, and TW32 Element Operation for a Reverse AG Fault....11.36
Figure 11.15 Configuration for Testing Single-Ended TW-Based Fault Locating Through Use of One SEL-T4287....11.37
Figure 11.16 SUMMARY Report for a Simulated Internal AG Fault at 50 km From the Local Terminal 11.38
Figure 11.17 Injected A-Phase Current, A-Phase Differentiator-Smoother Output Signal (TWIA), and Single-Ended Fault Location Estimate for an Internal AG Fault at 50 km....11.39
Figure 11.18 Playback File Conversion Utility User Interface....11.41
Figure 11.19 Event Playback Dashboard User Interface 11.45
Figure 11.20 Metering Data (Response to the METER Command)....11.48
Figure 11.21 Identify the Last Pole to Close to Determine the TWLPT Value....11.51
Figure 11.22 Alpha Current and Alpha Current TW in the Selected Phase 11.52
Figure 11.23 (a) Current Launched at Breaker Closing and (b) Current TW Reflected From the Remote Terminal....11.52
Figure B.1 Converting Settings B.4
Figure B.2 Prepare the Device (Step 1 of 4) Dialog Window B.7
Figure B.3 Save Calibration Settings Dialog Window B.8
Figure B.4 Save Relay Settings Dialog Window....B.8
Figure B.5 Selecting Events Reports Dialog Window B.9
Figure B.6 Event Report Save Details....B.9
Figure B.7 Load Firmware (Step 2 of 4) Dialog Window....B.10
Figure B.8 Load Firmware (Step 3 of 4) Dialog Window....B.11
Figure B.9 Failure to Reconnect Prompts....B.12
Figure B.10 Verify Device Settings (Step 4 of 4) Dialog Window....B.13
Figure B.11 Selection of the Saved Device Settings File....B.13
Figure B.12 Sample Settings Comparison Report....B.14
Figure B.13 Selecting Settings File to Load to the Relay....B.14
Figure B.14 Selecting Settings Class to Load to the Relay B.15
Figure B.15 Transferring New Firmware B.19
Figure C.1 Data Items in the Common Header of SEL ASCII Command Reports C.4
Figure C.2 Sample Common Header of SEL ASCII Command Reports....C.4
Figure F.1 Alarm Contact Output and Terminal Assignments F.3

Figure F.2 Status Report of a Healthy Relay (Example) F.3
Figure G.1 Simplified Signal Processing Diagram of the SEL-T400L G.1
Figure G.2 SEL-T400L Analog Circuitry Self-Monitoring G.3
Figure G.3 Scaling Secondary Currents in Dual-input Applications (LINEI = COMB) G.4
Figure G.4 Scaling Secondary Currents for the TW87 Protection Scheme G.4
Figure G.5 Data Window of the Differentiator-Smoother Filter G.5
Figure G.6 TW Measurement: (a) an Ideal Step, and (b) a Ramp, in the Raw Input G.5
Figure G.7 Principle of Qualifying TWs for Use in the TW87 Protection Scheme G.7
Figure G.8 Line Positive-Sequence (Z_1) and Zero-Sequence (Z_0) Impedances Tie Together the Phase Voltages and Currents of the Line G.7
Figure G.9 Six Independent Protection Loops Designed in Such a Way That Each Loop Measures an Apparent Resistance Equal to the Magnitude of Z_1 ..... G.8
Figure G.10 Mimic Circuit for Deriving AG-Loop Current G.8
Figure G.11 Mimic Circuit for Deriving AB-Loop Current G.9
Figure G.12 Logic for Deriving Incremental Quantities G.9
Figure G.13 Phasor Estimation Principle Using Frequency-Compensated Cosine Filtering G.11
Figure G.14 Power Line Divided Into Bins for Counting Line Events G.12
Figure G.15 Supervisory Conditions of the Line Monitor Trigger G.13
Figure G.16 Event Location Spread Causes Event Counting in Three Adjacent Bins G.14
Figure G.17 Blocking Regions of the Line Monitor G.14
Figure G.18 Event Playback Overview and Workflow G.17
Figure H.1 Confirming the High-Accuracy Timekeeping Relay Word Bits H.4
Figure H.2 Data Items in the TIM Q Report H.5
Figure H.3 Sample TIME Q Report H.5
Figure I.1 Analog Input Map Entry Window in QuickSet I.10
Figure I.2 Analog Input Scaling, Deadband, and Class Settings Window in QuickSet I.10

Preface

Overview

This instruction manual provides information and instructions for evaluating, applying, configuring, installing, testing, commissioning, and maintaining the SEL-T400L Relay. It is intended for personnel responsible for relay evaluation and certification, protection engineers designing utility-specific application standards, protection engineers applying an SEL-T400L to specific lines, panel designers, relay technicians, and communications and integration engineers and technicians.

The SEL-T400L Relay uses novel protection methods including incremental-quantity algorithms and traveling-wave algorithms. This instruction manual introduces new terms and concepts while striving for clarity and consistency. Pay close attention to the new concepts, and consider the precise meaning of new terms that this product and manual introduce.

Provided are detailed technical descriptions of the relay functions including protection elements, schemes, and communications channels; fault locating and recording; timekeeping; and supervisory control and data acquisition (SCADA), and human-machine interface (HMI) protocols. The manual also provides settings guidelines, application examples, and recommendations for testing and commissioning.

An overview of each manual section follows.

Sections 1 through 5 describe the SEL-T400L functionality.

Section 1: Introduction and Specifications. Introduces the SEL-T400L Relay and provides a high-level overview of its protection elements and schemes including their operating times; summarizes relay functions, applications, and benefits; and lists relay specifications and ratings as well as type tests and standard compliance information. This section is intended for all users, including procurement and business personnel.

Section 2: Protection Elements and Schemes. Provides detailed descriptions of all SEL-T400L protection elements, protection schemes, and auxiliary logic. For each element and scheme, the section provides a brief theory of operation; logic diagrams suitable for an application engineer and for test and commissioning personnel; a complete list of settings including their names, descriptions, ranges, default values, and recommendations on how to select settings for any given application; and a complete list of binary outputs (Relay Word bits) that are driven by the element or scheme. This section is intended for protection engineers responsible for evaluating and setting relays and for testing and commissioning personnel responsible for developing test plans and testing relays in the field.

Section 3: Protection Communications Channels. Explains contact and communications-based I/O capabilities of the relay and provides information on how to configure, apply, test, and troubleshoot digital protection channels of the relay. This section is intended for protection engineers responsible for evaluating and setting relays, utility communications engineers responsible for configuring and maintaining analog and digital

interstation protection channels, and for testing and commissioning personnel responsible for developing test plans and testing relays and digital protection channels in the field.

Section 4: Fault Locator and Line Monitor. Explains the fault-locating functionality of the SEL-T400L including single- and double-ended, traveling-wave- and impedance-based methods. The section provides information pertaining to configuring, testing, and understanding the results and accuracy of the SEL-T400L fault locator. The section also provides information related to the SEL-T400L line monitor feature for detecting, tabulating, and alarming on low-energy disturbances and recurring faults on the line to improve line maintenance and reduce the number of line faults. This section is intended for utility personnel responsible for deploying fault locators and integrating fault location results into SCADA/HMI software and databases.

Section 5: Fault and Event Recording. Explains the recording functionality of the SEL-T400L including 1 MHz oscillography records of input currents and voltages, 10 kHz oscillography records of input currents and voltages and derived protection signals, Sequential Events Records (SER) reports, and various operational and diagnostic records. The section explains information contained in the records, how to configure SEL-T400L recording functions, how to retrieve record files from the relay, and how to interpret records. This section is intended for protection engineers responsible for configuring fault recording in protective relays and analyzing fault records, for asset management personnel using SEL-T400L high-speed recording functions, and for integration engineers responsible for retrieving, parsing, and presenting various records from the relay.

Sections 6 and 7 provide applications guidelines.

Section 6: Settings Guidelines. Provides step-by-step instructions on how to configure all protection, fault locating, and recording settings of the relay. This section is intended for protection engineers responsible for developing SEL-T400L utility-specific applications standards and templates and for protection engineers setting SEL-T400L Relays for specific lines.

Section 7: Protection Applications Examples. Includes several application examples illustrating the general SEL-T400L settings rules. This section is intended for protection engineers responsible for developing SEL-T400L utility-specific applications standards and templates and for protection engineers setting SEL-T400L Relays for specific lines.

Sections 8 and 9 describe interfaces and tools for human operators and machine clients, respectively.

Section 8: Engineering and Operator Access Interfaces and Tools. Provides information pertaining to human operators, including information on how to install and use ACSELERATOR QuickSet SEL-5030 Software and the SEL command line interface language to configure, set, manage, and operate the relay; how to prepare a personal computer (PC) for communication with the relay; and how to configure a relay for communication over an Ethernet network. The section provides detailed information on how to operate the relay through use of a front-panel HMI and how to interpret the front-panel indicators and target LEDs. This section is intended for engineers and technicians who create relay settings files, configure and test relays in the field, or otherwise work with physical devices via communications ports or a front-panel HMI. This section is also helpful to integration engineers and product evaluation personnel because it explains how to establish communication with the relay and how to use engineering access tools.

Section 9: SCADA and HMI Protocols. Describes the communications protocols of the relay and how to integrate the SEL-T400L into a SCADA/HMI system. The section describes a novel Fast Time-Domain Values streaming protocol that allows continuous real-time monitoring applications through use of 1 MHz samples acquired by the SEL-T400L and transmitted over Ethernet. The section also describes cybersecurity features and best practices. This section is intended for integration engineers and technicians.

Sections 10 and 11 describe installation, and testing and commissioning, respectively.

Section 10: Installation. Provides information pertaining to physical relay installation, including mounting the relay chassis in a panel or rack, making rear-panel connections (including wiring to CTs, PTs, contact I/O, and an IRIG-B time source), connecting communications media to the relay, setting internal jumpers for emergency password override, and inspecting the relay. This section is intended for panel designers, engineers responsible for designing ac and dc circuits, and for technicians mounting, wiring, inspecting, and checking new relays.

Section 11: Testing and Commissioning. Provides recommendations on how to test and commission the SEL-T400L protection elements and schemes, including measuring the line traveling-wave propagation time during commissioning. This section also explains how to use the built-in event playback testing feature to test the SEL-T400L protection and fault locating functions using transient files without the need for a physical test set. This section is intended for protection and test engineers responsible for developing test plans and relay technicians responsible for testing, commissioning, and troubleshooting relays in the field.

In addition, this instruction manual includes appendices containing reference information or step-by-step instructions, as follows.

Appendix A: Firmware and Manual Versions. Lists the current firmware versions and details differences between the current and previous versions.

Appendix B: Firmware Upgrade Instructions. Describes step-by-step instructions on how to upgrade relay firmware.

Appendix C: SEL ASCII Commands. Provides an overview of SEL ASCII commands with examples for each command option. The appendix also includes a reference table associating the commands with typical engineering tasks.

Appendix D: Relay Word Bits. Lists all Relay Word bits in alphabetical order.

Appendix E: Analog Quantities. Contains a summary of analog quantities.

Appendix F: Diagnostics. Explains relay diagnostics and self-tests and offers troubleshooting guidelines and instructions.

Appendix G: Signal Processing. Explains relay signal processing including sampling and processing rates, self-monitoring, and signal scaling. The appendix explains how to measure traveling waves, incremental quantities, phasors, and frequency. It also explains line monitoring logic as well as voltage and current substitution during event playback testing.

Appendix H: High-Accuracy Timekeeping. Explains relay time synchronization, external time source selection, and relay-to-relay synchronization via the direct point-to-point fiber-optic Port 6 connection.

The SEL-T400L Relay applications often use other SEL products. Below is a list of instruction manuals and application guides for companion products:

- ACSELERATOR QuickSet SEL-5030 Software Instruction Manual
- SEL-5601-2 SYNCHROWAVE Event Software Instruction Manual
- SEL-T4287 Traveling-Wave Test System Instruction Manual
- SEL-2507 High-Speed Remote I/O Module Instruction Manual
- SEL Application Guide AG2014-33, Introduction to Fiber-Optic Communications Technology
- SEL Application Guide AG2012-08, SEL Fiber-Optic Device Compatibility Guide
- SEL ICON Integrated Communications Optical Network Instruction Manual
- SEL-451 Protection, Automation, and Bay Control System Instruction Manual

All of the previously listed documents are available at selinc.com.

Safety Information

Dangers, Warnings, and Cautions

This manual uses three kinds of hazard statements, defined as follows:

⚠DANGER
Indicates an imminently hazardous situation that, if not avoided, **will** result in death or serious injury.

⚠WARNING
Indicates a potentially hazardous situation that, if not avoided, **could** result in death or serious injury.

⚠CAUTION
Indicates a potentially hazardous situation that, if not avoided, **may** result in minor or moderate injury or equipment damage.

Safety Symbols

The following symbols are often marked on SEL products.

	⚠CAUTION Refer to accompanying documents.	⚠ATTENTION Se reporter à la documentation.
	Earth (ground)	Terre
	Protective earth (ground)	Terre de protection
	Direct current	Courant continu
	Alternating current	Courant alternatif
	Both direct and alternating current	Courant continu et alternatif
	Instruction manual	Manuel d'instructions

Safety Marks

The following statements apply to this device.

General Safety Marks

⚠CAUTION There is danger of explosion if the battery is incorrectly replaced. Replace only with Ray-O-Vac® no. BR2335 or equivalent recommended by manufacturer. See Owner's Manual for safety instructions. The battery used in this device may present a fire or chemical burn hazard if mistreated. Do not recharge, disassemble, heat above 100°C or incinerate. Dispose of used batteries according to the manufacturer's instructions. Keep battery out of reach of children.	⚠ATTENTION Une pile remplacée incorrectement pose des risques d'explosion. Remplacez seulement avec un Ray-O-Vac® no BR2335 ou un produit équivalent recommandé par le fabricant. Voir le guide d'utilisateur pour les instructions de sécurité. La pile utilisée dans cet appareil peut présenter un risque d'incendie ou de brûlure chimique si vous en faites mauvais usage. Ne pas recharger, démonter, chauffer à plus de 100°C ou incinérer. Éliminez les vieilles piles suivant les instructions du fabricant. Gardez la pile hors de la portée des enfants.
⚠CAUTION To ensure proper safety and operation, the equipment ratings, installation instructions, and operating instructions must be checked before commissioning or maintenance of the equipment. The integrity of any protective conductor connection must be checked before carrying out any other actions. It is the responsibility of the user to ensure that the equipment is installed, operated, and used for its intended function in the manner specified in this manual. If misused, any safety protection provided by the equipment may be impaired.	⚠ATTENTION Pour assurer la sécurité et le bon fonctionnement, il faut vérifier les classements d'équipement ainsi que les instructions d'installation et d'opération avant la mise en service ou l'entretien de l'équipement. Il faut vérifier l'intégrité de toute connexion de conducteur de protection avant de réaliser d'autres actions. L'utilisateur est responsable d'assurer l'installation, l'opération et l'utilisation de l'équipement pour la fonction prévue et de la manière indiquée dans ce manuel. Une mauvaise utilisation pourrait diminuer toute protection de sécurité fournie par l'équipement.
For use in Pollution Degree 2 environment.	Pour l'utilisation dans un environnement de Degré de Pollution 2.

Other Safety Marks (Sheet 1 of 3)

⚠DANGER Disconnect or de-energize all external connections before opening this device. Contact with hazardous voltages and currents inside this device can cause electrical shock resulting in injury or death.	⚠DANGER Débrancher tous les raccordements externes avant d'ouvrir cet appareil. Tout contact avec des tensions ou courants internes à l'appareil peut causer un choc électrique pouvant entraîner des blessures ou la mort.
⚠DANGER Contact with instrument terminals can cause electrical shock that can result in injury or death.	⚠DANGER Tout contact avec les bornes de l'appareil peut causer un choc électrique pouvant entraîner des blessures ou la mort.
⚠WARNING Use of this equipment in a manner other than specified in this manual can impair operator safety safeguards provided by this equipment.	⚠AVERTISSEMENT L'utilisation de cet appareil suivant des procédures différentes de celles indiquées dans ce manuel peut désarmer les dispositifs de protection d'opérateur normalement actifs sur cet équipement.

Other Safety Marks (Sheet 2 of 3)

⚠**WARNING** Have only qualified personnel service this equipment. If you are not qualified to service this equipment, you can injure yourself or others, or cause equipment damage.	⚠**AVERTISSEMENT** Seules des personnes qualifiées peuvent travailler sur cet appareil. Si vous n'êtes pas qualifiés pour ce travail, vous pourriez vous blesser avec d'autres personnes ou endommager l'équipement.
⚠**WARNING** This device is shipped with default passwords. Default passwords should be changed to private passwords at installation. Failure to change each default password to a private password may allow unauthorized access. SEL shall not be responsible for any damage resulting from unauthorized access.	⚠**AVERTISSEMENT** Cet appareil est expédié avec des mots de passe par défaut. A l'installation, les mots de passe par défaut devront être changés pour des mots de passe confidentiels. Dans le cas contraire, un accés non-autorisé á l'équipement peut être possible. SEL décline toute responsabilité pour tout dommage résultant de cet accés non-autorisé.
⚠**WARNING** Do not look into the fiber ports/connectors.	⚠**AVERTISSEMENT** Ne pas regarder vers les ports ou connecteurs de fibres optiques.
⚠**WARNING** Do not look into the end of an optical cable connected to an optical output.	⚠**AVERTISSEMENT** Ne pas regarder vers l'extrémité d'un câble optique raccordé à une sortie optique.
⚠**WARNING** Do not perform any procedures or adjustments that this instruction manual does not describe.	⚠**AVERTISSEMENT** Ne pas appliquer une procédure ou un ajustement qui n'est pas décrit explicitement dans ce manuel d'instruction.
⚠**WARNING** During installation, maintenance, or testing of the optical ports, use only test equipment qualified for Class 1 laser products.	⚠**AVERTISSEMENT** Durant l'installation, la maintenance ou le test des ports optiques, utilisez exclusivement des équipements de test homologués comme produits de type laser de Classe 1.
⚠**WARNING** Incorporated components, such as LEDs and transceivers are not user serviceable. Return units to SEL for repair or replacement.	⚠**AVERTISSEMENT** Les composants internes tels que les leds (diodes électroluminescentes) et émetteurs-récepteurs ne peuvent pas être entretenus par l'usager. Retourner les unités à SEL pour réparation ou remplacement.
⚠**CAUTION** Equipment components are sensitive to electrostatic discharge (ESD). Undetectable permanent damage can result if you do not use proper ESD procedures. Ground yourself, your work surface, and this equipment before removing any cover from this equipment. If your facility is not equipped to work with these components, contact SEL about returning this device and related SEL equipment for service.	⚠**ATTENTION** Les composants de cet équipement sont sensibles aux décharges électrostatiques (DES). Des dommages permanents non-décelables peuvent résulter de l'absence de précautions contre les DES. Raccordez-vous correctement à la terre, ainsi que la surface de travail et l'appareil avant d'en retirer un panneau. Si vous n'êtes pas équipés pour travailler avec ce type de composants, contacter SEL afin de retourner l'appareil pour un service en usine.
⚠**CAUTION** Do not install a jumper on positions A or D of the main board J12 header. Relay misoperation can result if you install jumpers on positions J12A and J12D.	⚠**ATTENTION** Ne pas installer de cavalier sur les positions A ou D sur le connecteur J12 de la carte principale. Une opération intempestive du relais pourrait résulter suite à l'installation d'un cavalier entre les positions J12A et J12D.
⚠**CAUTION** Insufficiently rated insulation can deteriorate under abnormal operating conditions and cause equipment damage. For external circuits, use wiring of sufficiently rated insulation that will not break down under abnormal operating conditions.	⚠**ATTENTION** Un niveau d'isolation insuffisant peut entraîner une détérioration sous des conditions anormales et causer des dommages à l'équipement. Pour les circuits externes, utiliser des conducteurs avec une isolation suffisante de façon à éviter les claquages durant les conditions anormales d'opération.
⚠**CAUTION** Relay misoperation can result from applying other than specified secondary voltages and currents. Before making any secondary circuit connections, check the nominal voltage and nominal current specified on the rear-panel nameplate.	⚠**ATTENTION** Une opération intempestive du relais peut résulter par le branchement de tensions et courants secondaires non conformes aux spécifications. Avant de brancher un circuit secondaire, vérifier la tension ou le courant nominal sur la plaque signalétique à l'arrière.
⚠**CAUTION** Do not connect power to the relay until you have completed these procedures and receive instruction to apply power. Equipment damage can result otherwise.	⚠**ATTENTION** Ne pas mettre le relais sous tension avant d'avoir complété ces procédures et d'avoir reçu l'instruction de brancher l'alimentation. Des dommages à l'équipement pourraient survenir autrement.

Other Safety Marks (Sheet 3 of 3)

⚠CAUTION Use of controls or adjustments, or performance of procedures other than those specified herein, may result in hazardous radiation exposure.	⚠ATTENTION L'utilisation de commandes ou de réglages, ou l'application de tests de fonctionnement différents de ceux décrits ci-après peuvent entraîner l'exposition à des radiations dangereuses.
⚠CAUTION Class 1 LASER Product. This product uses visible or invisible LASERs based on model option. Looking into optical connections, fiber ends, or bulkhead connections can result in hazardous radiation exposure.	⚠ATTENTION Produit LASER de Classe 1. Ce produit utilise des LASERS visibles ou invisibles dépendant des options du modèle. Regarder vers les connecteurs optiques, les extrémités des fibres ou les connecteurs de cloison peut entraîner une exposition à des rayonnements dangereux.

General Information

Typographic Conventions

There are three ways to interface with the SEL-T400L:

- Using ACSELERATOR QuickSet Software
- Using the front-panel menus and pushbuttons
- Using a command line interface on a PC terminal emulator

The instructions in this manual indicate these options with specific font and formatting attributes. The following table lists these conventions:

Example	Description
STATUS	Commands, command options, and command variables typed at a command line interface on a PC.
n **SUM *n***	Variables determined based on an application (in bold if part of a command).
<Enter>	Single keystroke on a PC keyboard.
<Ctrl+D>	Multiple/combination keystroke on a PC keyboard.
Start > Settings	PC software dialog boxes and menu selections. The > character indicates submenus.
ENABLE	Relay front- or rear-panel labels and pushbuttons.
MAIN > METER	Relay front-panel LCD menus and relay responses visible on the PC screen. The > character indicates submenus.

Logic Diagrams

Logic diagrams in this manual follow the conventions and definitions shown below.

NAME	SYMBOL	FUNCTION
COMPARATOR	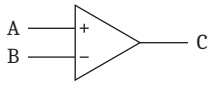	Input A is compared to input B. Output C asserts if A is greater than B.
OR	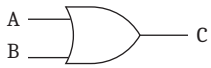	Either input A or input B asserted cause output C to assert.
NOR		If neither A nor B asserts, output C asserts.
AND		Input A and input B must assert to assert output C.
AND W/ INVERTED INPUT		If input A is asserted and input B is deasserted, output C asserts. Inverter "O" inverts any input or output on any gate.
NAND		If A and/or B are deasserted, output C is asserted.
TIME DELAYED PICK UP AND/OR TIME DELAYED DROP OUT	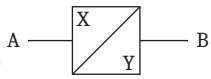	X is a time-delay-pickup value; Y is a time-delay-dropout value. B asserts time X after input A asserts; B will not assert if A does not remain asserted for time X. If X is zero, B will assert when A asserts, and B will remain asserted for time Y after A deasserts. If Y is zero, B will deassert when A deasserts.
EDGE TRIGGER TIMER	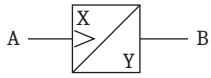	Rising edge of A starts timers. Output B will assert time X after the rising edge of A. B will remain asserted for time Y. If Y is zero, B will assert for a single processing interval. Input A is ignored while the timers are running.
SET RESET LATCH	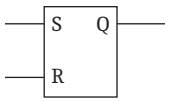	Input S asserts output Q until input R asserts. Output Q deasserts or resets when R asserts.
FALLING EDGE	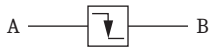	B asserts at the falling edge of input A.
RISING EDGE		B asserts at the rising edge of input A.

Trademarks

Trademarks appearing in this manual are shown in the following table.

SEL Trademarks	
acSELerator QuickSet®	Mirrored Bits®
acSELerator Team®	SELogic®
Compass®	synchroWAVe®
ICON®	

Technical Support

We appreciate your interest in SEL products and services. If you have questions or comments, please contact us at:

Schweitzer Engineering Laboratories, Inc.
2350 NE Hopkins Court
Pullman, WA 99163-5603 U.S.A.
Tel: +1.509.338.3838
Fax: +1.509.332.7990
Internet: selinc.com/support
Email: info@selinc.com

This page intentionally left blank

SECTION 1

Introduction and Specifications

The SEL-T400L Relay is an ultra-high-speed line protective relay for power lines. Using incremental quantities and traveling waves, the SEL-T400L trips line faults in 2–5 ms on average depending on line length, fault characteristics, and system conditions. The SEL-T400L is suitable for series-compensated lines, three-pole and single-pole tripping applications, and single- and dual-breaker line terminations. Apply the SEL-T400L to improve power system performance by increasing transient stability margins. Application of the SEL-T400L also increases public and personnel safety, reduces equipment wear, and limits property damage.

The SEL-T400L features a very accurate fault locator based on field-proven SEL traveling-wave fault-locating technology. Apply the SEL-T400L double-ended and single-ended traveling-wave-based fault-locating methods to improve grid operation by locating line faults to within a single tower span. The SEL-T400L leverages the double-ended traveling-wave fault-locating method to provide a line monitor function. The line monitor triggers on current traveling waves launched by fault precursors such as partial discharge due to a dirty insulator or encroaching vegetation. The line monitor locates fault precursors with high accuracy, tabulates the precursor events for locations along the line, and alarms if the event count exceeds a user-settable alarm threshold at any location. Use the line monitor for condition-based line maintenance to prevent line faults and to discover weak spots along the line.

Double-ended fault locating and line monitoring work over a direct fiber connection or an IEEE C37.94 multiplexed channel. When using an IEEE C37.94 channel for fault locating and line monitoring, you must connect both relays of the scheme to accurate time sources, such as an IEEE C37.118-compliant clock with submicrosecond accuracy.

The SEL-T400L features high-resolution, time-synchronized fault recording, and streaming of fast time-domain values. Identify and troubleshoot high-frequency power system events, such as breaker restrike, through the use of 1 MHz digital fault recording.

Designed for simplicity of application, the SEL-T400L includes three types of line protection:

- An underreaching directly tripping distance element, without the need for a protection channel.
- A permissive overreaching transfer trip (POTT) scheme with ultra-high-speed directional elements over a low-bandwidth digital protection channel.
- A traveling-wave line current differential scheme over a dedicated fiber-optic channel.

These protection functions rely on just a few simple settings. Fewer than ten SEL-T400L settings require short-circuit calculations. Network evolution over time, such as the addition of new lines or transformers, impacts SEL-T400L

applications to a much lesser degree than similar applications that use phasor-based line protective relays. You can thus avoid frequent setting reevaluation when using the SEL-T400L.

Apply the SEL-T400L to satisfy a range of protection philosophies. Use preconfigured logic to satisfy your protection preferences and philosophy.

Use ACSELERATOR QuickSet SEL-5030 Software to configure, set, and access data from SEL-T400L Relays locally over a front-panel USB port and over an Ethernet network.

The SEL-T400L provides a simple communications means to access relay metering data and records. These protocols include SEL protocols for ease of integration with SEL systems, DNP3 over Ethernet (DNP3 LAN/WAN) for interconnecting with DNP-based SCADA systems, and generic Ethernet file transfer methods for ease of integration with Ethernet-based substation automation systems.

In order to use traveling waves and incremental quantities, the SEL-T400L measures high-frequency components in input currents and voltages. The relay still, however, works with traditional wiring and protection current and voltage transformers, including coupling capacitor voltage transformers (CCVTs). Follow standard relay installation practices when installing the SEL-T400L.

Apply a general relay testing methodology when bench-testing and commissioning the SEL-T400L but ensure that the high-frequency components in the test voltages and currents are congruent with those that occur in power systems. Apply standard secondary injection relay test sets to test and commission SEL-T400L metering functions and protection elements based on incremental quantities. Apply a traveling-wave-capable secondary injection test set, such as the SEL-T4287 Traveling-Wave Test System, to test the traveling-wave-based fault-locating methods and protection. Use event playback to evaluate the performance of all the protection and fault location functions.

The SEL-T400L prioritizes security over all other aspects of performance through use of the following features.

- The relay incorporates extensive self-monitoring beyond the standard practice for protective relays. Internal measurement redundancy and real-time data cross-checking provide enhanced security for relay component failures.
- The relay monitors input voltages and currents for signatures of electromagnetic interference. Persistent and excessive interference indicates abnormal environmental conditions. The relay disengages the traveling-wave protection functions in such cases because the bandwidth of the interference overlaps with the protection operating frequency bandwidth.
- The relay uses fiber-optic ports for all protection channels, including three fiber-optic ports for direct relay-to-relay signaling and teleprotection between the line terminals using multiplexed channels and one dedicated point-to-point fiber-optic protection channel between the line terminals. Because it uses fiber optics rather than electrical media, the relay is less impacted by electromagnetic interference to the communications channel. The SEL-T400L uses digital communication for pilot protection, securing direct and permissive tripping signals with strong data integrity algorithms and allowing fast operation without concern for channel security.
- The relay protection algorithm design favors protection security over protection dependability.

Time-domain protection elements and schemes are not inherently 100 percent dependable. Faults that happen when the instantaneous voltage at the fault point is small launch either small traveling waves or no traveling waves at all, which prevents the traveling-wave protection from operating. Also, the incremental-quantity distance element may not operate for some fault or system conditions. In addition, the SEL-T400L does not include time-coordinated protection elements for local and remote backup. Consider these limitations of the SEL-T400L protection dependability and feature set in your overall protection system design. Depending on the criticality of the application, system voltage level, and utility protection redundancy requirements, you will need to apply a phasor-based protective relay in parallel with the SEL-T400L.

Simplify your procurement, protection engineering, panel design and manufacturing, and spare part management with the SEL-T400L, a fit-for-purpose device having the following specifications:

- Power Supply: 125–250 Vdc and 110–240 Vac
- Voltage Rating: 57.7–144.3 V phase-to-neutral
- Current Rating: 5 A CT nominal (Model: T400L#0001), 1 A CT nominal (Model: T400L#0002)
- Connector Type: Screw-Terminal Blocks
- Mounting and Chassis: 3U Horizontal Rack Mount
- Contact I/O: 6 trip-rated outputs (250 Vdc), 1 alarm output, and 5 inputs (125 Vdc)
- Protection Channels: Point-to-point dedicated fiber-optic port and 3 fiber-optic MIRRORED BITS ports with user-configurable encoding; select either the MB8 format of the SEL MIRRORED BITS protocol or IEEE C37.94.
- Communications Protocols: FTP, Telnet, SEL ASCII, SEL Fast Meter, SEL Fast SER, and DNP3 LAN/WAN.

Order transceivers for the dedicated point-to-point fiber-optic channel separately to account for the line lengths of a particular application.

Contact SEL for particular part number and ordering information (see *Technical Support on page xxiii in the Preface*). You can also view the latest part number and ordering information on the SEL website at selinc.com.

This section introduces the SEL-T400L and provides information on the following topics:

- *Features on page 1.3*
- *Applications on page 1.9*
- *Specifications on page 1.12*

Features

Figure 1.1 presents a simplified functional overview of the SEL-T400L, and *Table 1.1* and *Table 1.2* list the key functions of the relay.

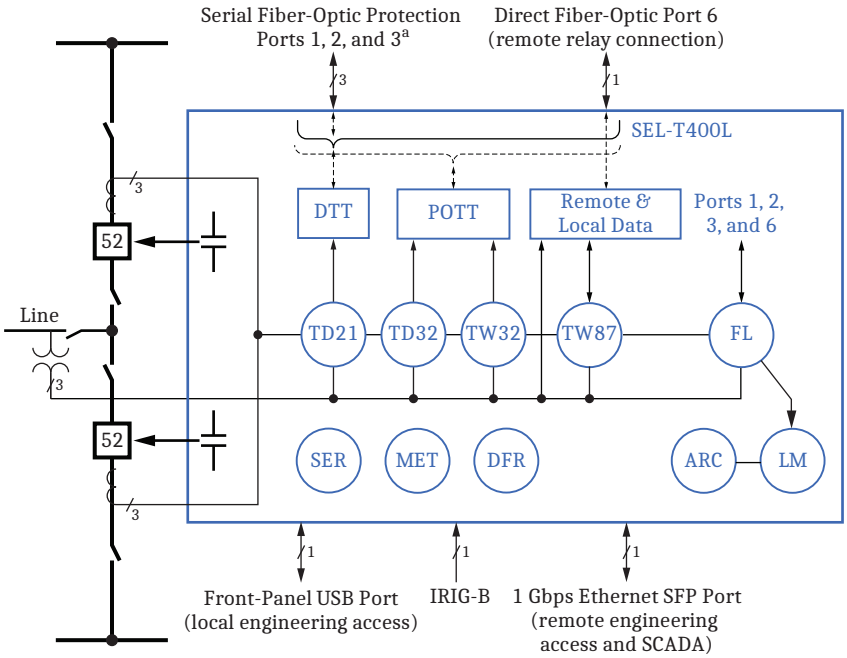

[a]Encoding is user-configurable per port; select either SEL MB8 or IEEE C37.94.

Figure 1.1 SEL-T400L Functional Overview

Table 1.1 ANSI Numbers/Acronyms and Functions (Sheet 1 of 2)

1	Arming and Starting Logic
TD21	Incremental-Quantity Distance
TD32	Incremental-Quantity Directional
TW32	Traveling-Wave Directional
TW87	Traveling-Wave Differential
TD50	Incremental-Quantity Nondirectional Overcurrent Supervision
TD67	Incremental-Quantity Directional Overcurrent Supervision
DTT	Direct Transfer Trip Logic
POTT	Permissive Overreaching Transfer Trip Logic
94	High-Speed Trip-Rated Outputs
85 RIO	SEL MIRRORED BITS Communications
LOP	Loss-of-Potential Logic
TWDD	Traveling-Wave Disturbance Detection
DFR	1 MHz Event Recorder
SER	Sequential Events Recorder
FL	Fault Locator (traveling-wave and impedance methods, single-ended and double-ended)
LM	Line Monitor
ARC	Adaptive Autoreclose Cancel Logic

Table 1.1 ANSI Numbers/Acronyms and Functions (Sheet 2 of 2)

MET	Metering
HMI	Operator Interface

Table 1.2 Additional Functions

Preconfigured Trip Logic
Single-Pole Tripping Logic
Open-Pole Detection Logic
Traveling-Wave Test Mode
Event Playback
Front-Panel USB 2.0 Port for Engineering Access
Ethernet Port for Engineering and SCADA Access
Multilevel Passwords for Secure Access
Electromagnetic Interference Monitoring
Enhanced Self-Monitoring
Fast Time-Domain Values (FTDV)

SEL-T400L Feature Highlights

Incremental-Quantity Distance Protection Element (TD21). Use the TD21 protection element to protect as much as 80 percent of the line. The TD21 element operates in 2–7 ms, depending on fault and system conditions (see *Figure 1.2*). Because the TD21 element trips without communications, the element operating time is not affected by channel delay. Therefore, the TD21 element often operates faster than communications-dependent schemes, especially for close-in faults on long transmission lines. The TD21 element has a transient overreach better than 10 percent, even considering the impact of CCVTs. To configure the SEL-T400L for series-compensated line applications and applications with series compensation on adjacent lines, you do not have to shorten the TD21 element reach to account for series compensation. The effective TD21 reach is not affected by the in-line series capacitors.

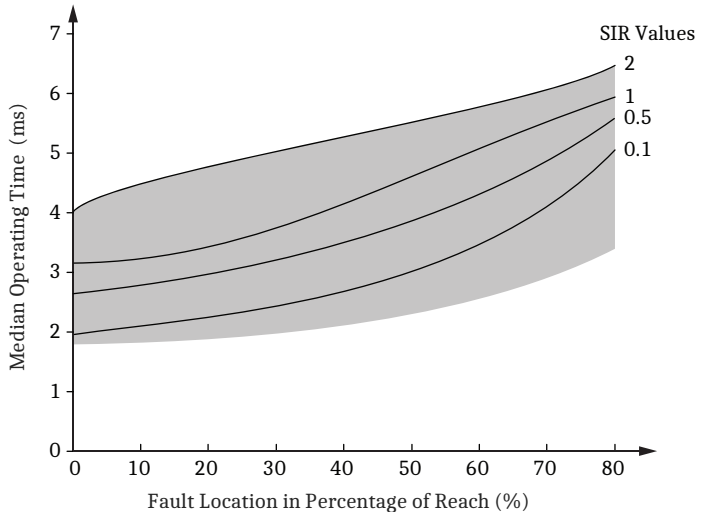

Figure 1.2 TD21 Element Median Operating Time for Varying Fault Location and Different Source-to-Line Impedance Ratios

Incremental-Quantity Directional Protection Element (TD32). Detect fault direction with the TD32 directional element, and use the POTT protection scheme to selectively trip for faults on the entire protected line. The TD32 element detects faults reliably, including high-resistance faults, and typically operates within 1–3 ms.

Traveling-Wave Directional Protection Element (TW32). Use the TW32 element to accelerate permissive trip keying in POTT applications. The TW32 element operates in 0.1 ms, regardless of fault and system conditions. The TW32 element is secure but not fully dependable. Whether the TW32 element operates for a fault depends on the frequency response of the voltage transformer and associated wiring, line TW termination impedance, point on wave of the voltage at the fault location, and fault resistance.

The POTT scheme operating time depends primarily on the channel delay, and therefore on the distance between the line terminals, as shown in *Figure 1.3*. The figure shows POTT operating time assuming keying from the TW32 directional element. The operating time includes the fiber delay and does not include the multiplexer electronics latency. Add 1–3 ms to obtain POTT operating time for cases when the TD32 element initiated permissive keying. Overcurrent POTT supervision may add some extra delay to the POTT operating time (see *Figure 1.5*).

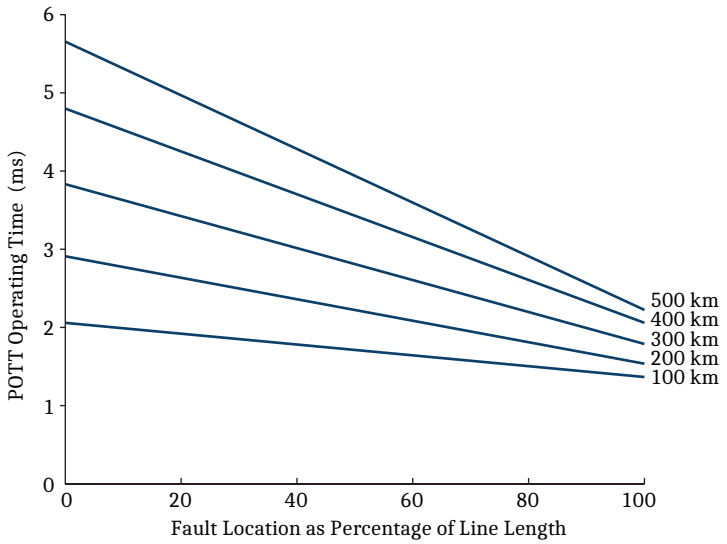

Figure 1.3 POTT Operating Time as a Function of Fault Location for Different Line Lengths Assuming TW32 Keying and a 115,200 bps Mirrored Bits Channel With SEL MB8 Encoding Over Fiber-Based SONET/SDH

Traveling-Wave Differential Protection Scheme (TW87). Use the TW87 scheme to protect the entire line length. Depending on line length (see *Figure 1.4*), the TW87 scheme operates in 1–5 ms. Overcurrent TW87 supervision may add some extra delay to the POTT operating time (see *Figure 1.5*). The TW87 is secure but not fully dependable. Whether the TW87 scheme operates depends on line termination effects, point on wave of the voltage at the fault location, and fault resistance.

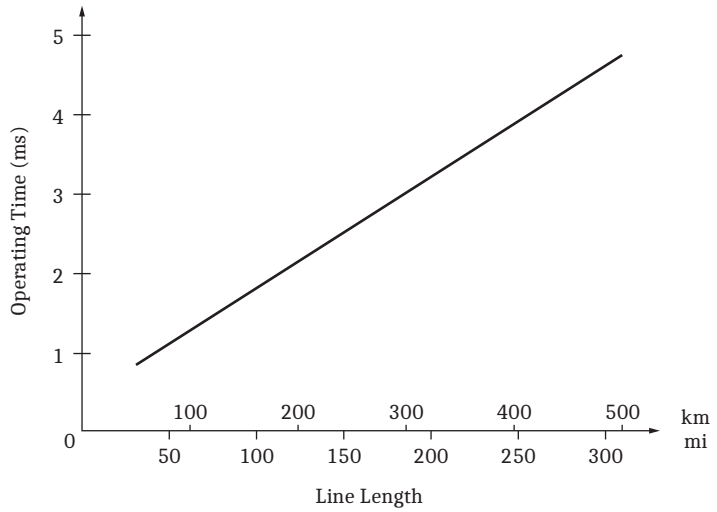

Figure 1.4 TW87 Scheme Operating Time as a Function of Line Length

Incremental-Quantity Overcurrent Supervision (TD50/TD67). For security, the POTT and TW87 communications-assisted schemes use the TD67 and TD50 elements, respectively, for trip supervision. The TD50 and TD67 elements are fast (see *Figure 1.5*) and accurate, with a transient overreach better than 10 percent.

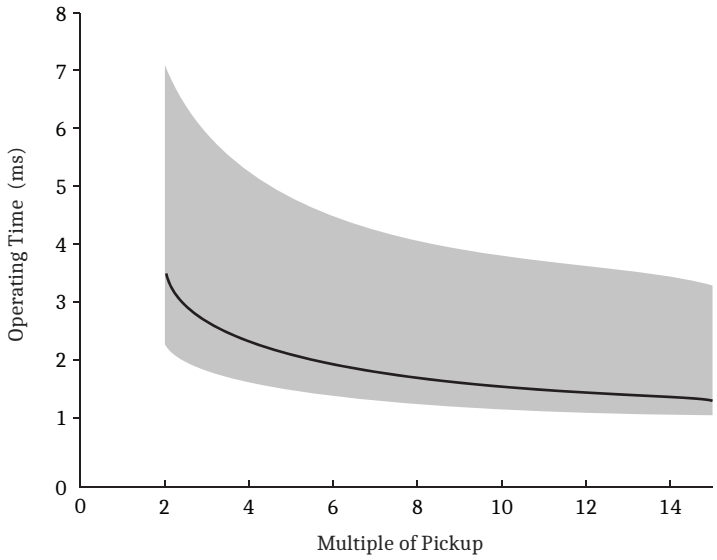

Figure 1.5 TD50/67 Operating Time as a Function of Multiple of Pickup (Range and Median)

Arming Logic. The SEL-T400L arming logic monitors line and relay operating conditions prior to an event and disarms the ultra-high-speed and sensitive time-domain protection elements if the operating conditions are inadequate for the safe use of the relay time-domain protection elements and schemes.

Starting Logic. The SEL-T400L starting logic monitors the protected line for a disturbance and releases time-domain protection for faults and switching events. It prevents the protection from operating during steady-state conditions and slow system changes with no faults present, such as during load encroachment and power swings.

Digital Fault Recorder. Capture line voltages and currents at a 1 MHz sampling rate, 18-bit resolution, and time-stamping accuracy better than 100 ns. Store as many as 50 records, each as long as 1.2 seconds. Trigger successive recordings in a back-to-back mode to capture longer events. Use multiple SEL-T400L Relays connected to a common time reference (satellite-synchronized clocks, for example) to analyze high-frequency components in voltages and currents throughout the substation or in adjacent substations.

Fault Locator. Use traveling-wave-based fault-locating methods to locate line faults with a typical accuracy of one tower span regardless of line length. Obtain a fault location directly from the relay within tens of milliseconds after the fault, with no need for an engineer to use standalone software. If the SEL-T400L cannot measure suitable traveling waves, it uses impedance-based fault-locating methods instead to provide dependable fault locating. The relay uses the double-ended traveling-wave method over either a direct fiber connection on Port 6 or a multiplexed channel on one of the three fiber-optic serial ports configured for IEEE C37.94 encoding. When using an IEEE C37.94 channel for traveling-wave fault locating, you must connect both relays to accurate time sources, such as an IEEE C37.118-compliant clock with submicrosecond accuracy.

Line Monitor. Identify trouble spots along the line and prevent faults through condition-based maintenance. The line monitor triggers on current traveling waves launched by fault precursors, locates these events with high accuracy by using the double-ended traveling-wave fault-locating method, tabulates these events for locations along the line length, and alarms if the event count exceeds a user-settable threshold. Monitor the line for dirty or cracked insulators, encroaching vegetation, marginal clearances, marginal lightning protection, incipient cable faults, conductor galloping due to wind and insufficient damping, ice unloading, and similar conditions. Reset the event counters for the troubled location after performing adequate maintenance and addressing the underlying problem. Configure up to two blocking regions to prevent false alarms for tapped loads or in-line series capacitors with routine switching operations. Monitor the daily event counts at the tap or series capacitor locations, and alarm on excessive switching and other problems. The line monitor obtains data from the double-ended traveling-wave fault-locating method and has the same channel and time source requirements as the method (either a direct fiber connection or an IEEE C37.94 multiplexed channel and an accurate time source).

Adaptive Autoreclose Cancel Logic. Locate faults in real time on hybrid lines consisting of overhead sections and underground cable sections. Control the line autoreclosing relay to cancel reclosing for faults on underground cable sections of a line while still allowing reclosing on overhead sections of the line. Use the adaptive autoreclose cancel logic to cancel reclosing in other situations, such as for faults near series capacitors, line taps, major highway crossings, densely populated areas, or areas susceptible to fire. The adaptive autoreclose cancel logic obtains data from the double-ended traveling-wave fault-locating method and has the same channel and time source requirements as the method (either a direct fiber connection or an IEEE C37.94 multiplexed channel and an accurate time source).

Built-In Test Functions. Simplify SEL-T400L approval and commissioning with built-in testing functions. Test and troubleshoot multiplexed and direct relay-to-relay digital protection channels with the SEL standard loopback mode. Apply the TW test mode to test and commission the TW87 scheme with high-frequency signal components alone, without the need to simultaneously inject the fundamental frequency currents and voltages. Test protection and fault-locating functions without the need for a physical relay test-set using the built-in event playback and events recorded in the field or simulated using electromagnetic

transient programs. Trigger a playback test in multiple relays based on time for end-to-end testing of the SEL-T400L protection schemes and multiended fault-locating methods.

Fast Time-Domain Values Streaming. Stream SEL-T400L 1 MHz voltage and current samples over Ethernet Port 5 for advanced monitoring applications residing on a high-performance computing platform and operating in real time. Receive, inspect, derive information, compare and correlate, archive, or discard data from one or more SEL-T400L Relays. Monitor your power system continuously and in real time at one or multiple locations for high-frequency events by using SEL-T400L Relays connected to satellite-synchronized clocks as measurement devices. Contact SEL to obtain detailed format description and tools to experiment with this advanced SEL-T400L functionality.

Applications

Use the SEL-T400L in a variety of line protection applications.

Table 1.3, *Table 1.4*, and *Table 1.5* list application highlights and key features for protection, fault locating, and digital fault recording, respectively.

Table 1.3 Protection Application Highlights (Sheet 1 of 2)

Application	Key Features
Dual-breaker line termination	➤ Two sets of three-phase CT inputs for individual current metering and recording that can be combined for protection and fault locating ➤ Two sets of ultra-high-speed trip-rated outputs (total of six outputs)
Single-pole tripping	➤ Open-pole detection logic ➤ Secure and dependable protection during an open-pole interval ➤ Per-phase, trip-rated outputs ➤ Phase-segregated POTT and DTT keying
Series-compensated lines	➤ TD32 element, TW32 element, and a TW87 scheme that are inherently immune to the effects of series compensation ➤ Series-compensation logic built into the TD21 element ➤ TW87 differential scheme that can coordinate with series capacitor bank platform protection schemes ➤ Fast overcurrent supervision for security of the POTT scheme when switching capacitors out of service ➤ Adaptive autoreclose cancel logic that inhibits autoreclosing for faults near the capacitor bank platform
Long lines	➤ Low-pass filtering, which ensures security of the TD21 and TD32 elements ➤ Second current input allows measuring the current of the local in-zone reactor for protection security
Short lines	➤ POTT scheme with TD32 and TW32 directional elements
Multiterminal lines	➤ TD21 element that provides protection for the local line segment and activates DTT ➤ POTT scheme for as many as three remote terminals
Tapped lines	➤ TW87 protection scheme that is secure for faults downstream from line taps ➤ TD21 element that provides protection for the local line segment and activates DTT
Hybrid lines consisting of overhead sections and underground cable sections	➤ Protection applications are feasible when the total underground cable run is much shorter than the total overhead line run ➤ Adaptive autoreclose cancel logic that inhibits autoreclosing for faults on underground cable sections

Table 1.3 Protection Application Highlights (Sheet 2 of 2)

Application	Key Features
Weak infeed	➤ TW32 element that is unaffected by weak infeed conditions ➤ TD32 element that is highly sensitive because it responds to incremental quantities and for ground faults it benefits from the zero-sequence source behind the relay
Permissive overreaching transfer trip (POTT) logic	➤ Ultra-high-speed and sensitive TW32 and TD32 directional elements ➤ Current reversal logic ➤ Phase-segregated permissive trip keying ➤ Fast overcurrent supervision for security when switching series capacitors out of service ➤ Two-, three-, and four-terminal applications
Direct transfer trip (DTT) logic	➤ Phase-segregated direct trip keying ➤ Supervision with local disturbance detection for enhanced security against channel issues ➤ Two-, three-, and four-terminal applications
POTT and DTT channel	➤ MIRRORED BITS communications via fiber-optic port over a time-division multiplexer with user-configurable encoding; select either SEL MB8 or IEEE C37.94 (preferred) ➤ MIRRORED BITS communications via fiber-optic port, converted to contact inputs and outputs (using SEL-2505, SEL-2506, or SEL-2507 devices) over power line carrier and other channels with I/O interface
TW87 channel	➤ Dedicated point-to-point single-mode fiber ➤ TW87 protection scheme, double-ended fault locating, DTT and POTT for two-terminal applications, and access to remote currents and voltages
Local relay-to-relay communication	➤ MIRRORED BITS communications via SEL-T400L fiber-optic port, converted to copper-based MIRRORED BITS on the connected SEL device ➤ Applications include breaker failure protection and autoreclose initiation, triggering for event recording and fault locating, and autoreclose cancel signal
Load encroachment	➤ Traveling-wave- and incremental-quantity-based protection are inherently secure and dependable during load-encroachment conditions
Power swings	➤ Traveling-wave- and incremental-quantity-based protection are inherently secure during power swing conditions ➤ Traveling-wave- and incremental-quantity-based protection remains nearly as dependable for faults during power swing conditions as during normal line operation
Coupling capacitor voltage transformers (CCVTs)	➤ TD21 and TD32 elements are inherently immune to CCVT transients ➤ TW32 element is secure and can detect faults by measuring voltage traveling waves via the stray capacitances of the CCVT tuning reactor and step-down transformer
Current transformers	➤ The relay requires time to saturation longer than about three-quarters of a cycle for close-in reverse faults and end-of-line faults (CT selection criteria are included)
Loss of potential (LOP)	➤ Traveling-wave- and incremental-quantity-based protection are inherently secure for a loss-of-potential condition ➤ LOP logic secures protection for external faults and switching events during an LOP condition

The SEL-T400L may require media converters or remote I/O modules to meet the input and output (I/O) requirements of any given application. Moreover, most SEL-T400L contacts and SEL MIRRORED BITS communications inputs and outputs are preconfigured and cannot be changed. Familiarize yourself with *Section 3: Protection Communications Channels* to understand how to meet the I/O requirements of your application and what other devices you will need to deploy the relay.

Table 1.4 Fault-Locating Application Highlights

Application	Key Features
Standalone traveling-wave-based fault locating	➤ Programmable trigger that makes use of contact inputs and MIRRORED BITS ➤ Single-ended fault-locating method without a need for communications ➤ Double-ended traveling-wave fault-locating method over a direct fiber connection or an IEEE C37.94 multiplexed channel with accurate time sources connected to both relays ➤ Works with standard protection current and voltage transformers and wiring ➤ Automatic fault-locating calculations with results available in a few tens of milliseconds
Condition-based line maintenance	➤ Line monitor detects, locates, tabulates, and alarms on fault precursors such as dirty insulators, incipient cable faults, encroaching vegetation, marginal clearances, or marginal lightning protection
Series-compensated lines	➤ Traveling-wave-based fault locating inherently immune to the effects of series compensation
Tapped lines	➤ Double-ended traveling-wave-based fault-locating method provides correct results for faults on the untapped section of the line; faults on the tapped section of the line appear as if located at the tap
Multiterminal lines	➤ Double-ended traveling-wave-based fault-locating method provides correct results for faults on the line between the two main terminals; faults on other sections appear as if they were located at the taps ➤ Use post-processing equations in the SCADA/HMI software with traveling-wave time stamps from all line terminals for unambiguous fault locating
Hybrid lines consisting of overhead lines and underground cables	➤ Double-ended traveling-wave-based fault-locating method compensates for line nonhomogeneity
Wide-area fault-locating software applications	➤ IEEE COMTRADE header files provide precise time stamps of the first traveling waves, referenced to absolute time (requires satellite-synchronized clock) ➤ Develop software for collection and analysis of time stamps from a wide area and triangulate faults and switching events by using traveling-wave time stamps

Table 1.5 Event-Recording Application Highlights

Application	Key Features
Standalone high-resolution event recorder	➤ Programmable trigger that makes use of contact inputs and MIRRORED BITS ➤ Time stamps referenced to absolute time when using a satellite-synchronized clock
Substation and wide-area event-recording applications	➤ Programmable trigger that makes use of contact inputs and MIRRORED BITS ➤ Time stamps referenced to absolute time when using a satellite-synchronized clock ➤ COMTRADE merge capability in SEL-5601-2 SYNCHROWAVE Event Software

Specifications

Compliance

Designed and manufactured under an ISO 9001 certified quality management system

FCC Compliance Statement

This equipment has been tested and found to comply with the limits for a Class A digital device, pursuant to part 15 of the FCC Rules. These limits are designed to provide reasonable protection against harmful interference when the equipment is operated in a commercial environment. This equipment generates, uses, and can radiate radio frequency energy and, if not installed and used in accordance with the instruction manual, may cause harmful interference in which case the user will be required to correct the interference at his own expense.

UL Listed to U.S. and Canadian safety standards (File E212775; NRGU, NRGU7)

CE Mark

General

AC Analog Inputs

Sampling Rate:	1 MHz
A/D Resolution:	18 bits

AC Current Inputs

Rated Input Current:

1 A Model:	1 A
5 A Model:	5 A

Continuous Thermal Rating:

1 A Model:	3 A
5 A Model:	15 A

A/D Measurement Limit:

1 A Model:	50 A peak (17.67 A rms fully offset ac current)
5 A Model:	250 A peak (88.4 A rms fully offset ac current)

One-Second Thermal Withstand:

1 A Model:	100 A rms
5 A Model:	500 A rms

Burden:

1 A Model:	<0.1 VA at 1 A, 60 Hz
5 A Model:	<0.5 VA at 5 A, 60 Hz

AC Voltage Inputs

Connection:	Four-wire wye with a common neutral, dc coupled
Rated Voltage Range:	57.7–144.3 V LN (VNOM = 100–250 V LL)
Continuous Thermal Rating:	175 V rms LN
A/D Measurement Limit:	280 V peak LN
Ten-Second Thermal Withstand:	350 V rms LN
Burden:	<0.1 VA at 120 V LN

Power Supply

Rated Voltage:	125–250 Vdc 110–240 Vac
Operational Voltage Range:	85–300 Vdc 85–264 Vac
Rated Frequency:	50/60 Hz
Operational Frequency Range:	30–120 Hz
Vdc Input Ripple:	15% per IEC 60255-26:2013
Interruption:	46 ms @ 125 Vdc, 250 ms @ 250 Vdc per IEC 60255-26:2013
Burden:	<35 W, <90 VA

Control Outputs

Note: IEEE C37.90-2005 and IEC 60255-27:2013

Update Rate:	10 kHz
Make (Short Duration Contact Current):	30 Adc
Limiting Making Capacity:	1000 W at 250 Vdc (L/R = 40 ms)
Mechanical Endurance:	10,000 operations

Fast Hybrid (High-Speed, High-Current Interrupting) Form A

Rated Voltage:	125–250 Vdc
Operational Voltage Range:	0–300 Vdc
Operating Time:	Pickup time ≤10 µs (resistive load) Dropout ≤8 ms (resistive load)
Short Time Thermal Withstand:	50 Adc for 1 s
Continuous Contact Current:	6 Adc at 70°C (158°F) 4 Adc at 85°C (185°F)
Contact Protection:	MOV protection across open contacts 300 Vdc continuous voltage
Limiting Breaking Capacity/Electrical Endurance:	10,000 operations 4 operations in 1 second, followed by 2 minutes idle

Rated Voltage	Resistive Break	Inductive Break
125 Vdc	10 Adc	10 Adc (L/R = 40 ms)
250 Vdc	10 Adc	10 Adc (L/R = 20 ms)

Alarm Output (Form C)

Rated Voltage:	125–250 Vdc
Operational Voltage Range:	0–300 Vdc
Operating Time:	Pickup time ≤6 ms (resistive load) Dropout ≤6 ms (resistive load)
Short Time Thermal Withstand:	50 Adc for 1 s
Continuous Contact Current:	6 Adc at 70°C (158°F) 4 Adc at 85°C (185°F)
Contact Protection:	MOV protection across open contacts 300 Vdc continuous voltage
Limiting Breaking Capacity/Electrical Endurance:	10,000 operations 4 operations in 1 second, followed by 2 minutes idle

Rated Voltage	Resistive Break	Inductive Break
125 Vdc	0.30 Adc	0.30 Adc (L/R = 40 ms)
250 Vdc	0.20 Adc	0.20 Adc (L/R = 20 ms)

Control Inputs

Optoisolated (Bipolar Operation)

Connection:	5 inputs with a shared common terminal
Voltage Option:	125 Vdc
Current Draw:	≤5 mA at nominal voltage
Sampling Rate:	10 kHz
DC Threshold	
125 Vdc:	Pickup 105–150.0 Vdc; Dropout <75 Vdc

Communications Ports

Fiber-Optic Protection Signaling Ports 1, 2, and 3

Applications:	Relay-to-relay signaling, POTT[1], DTT, double-ended traveling-wave fault locating (IEEE C37.94[2]), adaptive autoreclose cancel logic (IEEE C37.94[2]), and line monitoring (IEEE C37.94[2])

[1] 15 ms maximum channel latency
[2] 30 ms maximum channel latency

Data Rate:	19200 to 115200 bps (SEL MIRRORED BITS encoding) 64 kbps (IEEE C37.94 encoding)
Fiber Connector Type:	ST
Fiber Type:	Multimode
Fiber Wavelength:	820 nm
Fiber Size:	62.5/125 µm
Minimum Receiver Sensitivity:	–24 dBm
Transmitter Power:	–18.5 dBm (minimum) –10.5 dBm (maximum)
Data Integrity Protection:	Meets IEC 60834-1 transmission time, bit error rate security, and bit error rate dependability recommendations for direct tripping and teleprotection applications over digital channels

USB Port (Port F)

Connector Type:	Type B
USB Type:	2.0

Fiber Ethernet Port 5

Maximum Data Rate:	1 Gbps
Connector Type:	SFP
Wavelength:	850 nm
Distance:	0.3 km multimode

Fiber-Optic Protection Signaling Port 6 (Transceivers Ordered Separately)

Applications:	POTT and DTT for two-terminal applications, traveling-wave differential protection scheme[1], double-ended fault locating, adaptive autoreclose cancel logic, line monitoring, and remote line-end recording and metering

[1] One-way channel delay less than 4 ms and less than the TW line propagation time plus 2 ms

Data Rate:	1 Gbps
Connector Type:	SFP
Wavelength:	850–1550 nm depending on transceiver
Distance:	0.3–200 km depending on transceiver

Port 5 and Port 6 SFP Transceivers

0.3 km, 850 nm, multimode
0.5 km, 850 nm, multimode
10 km, 1310 nm, single-mode
20 km, 1310 nm, single-mode
30 km, 1310 nm, single-mode
40 km, 1310 nm, single-mode
50 km, 1550 nm, single-mode
80 km, 1550 nm, single-mode
160 km, 1550 nm, single-mode
200 km, 1550 nm, single-mode

Time Input

IRIG-B Input

Applications:	Precise time synchronization for digital fault recording and sequential events recording When using an IEEE C37.94 channel, precise time synchronization for double-ended traveling-wave fault locating, adaptive autoreclose cancel logic, and line monitoring
Input:	Demodulated IRIG-B
Rated I/O Voltage:	5 Vdc
Operating Voltage Range:	0–8 Vdc
Input Impedance:	≥1 kΩ

Operating Temperature

Relay:	–40° to +85°C (–40° to +185°F)

Note: LCD contrast impaired for temperatures below –20°C (–4°F) and above +70°C (+158°F).

SFP Transceivers:	–40° to +70°C (–40° to +158°F)

Humidity

5% to 95% without condensation

Overvoltage Category

Category III

Insulation Class

I

Pollution Degree

2

Weight (Maximum)

3U Rack Unit:	6.01 kg (13.25 lb)

Terminal Connections

Rear Screw-Terminal Tightening Torque, #8 Ring Lug

Minimum:	1.0 Nm (9 in-lb)
Maximum:	2.0 Nm (18 in-lb)

User terminals and stranded copper wire should have a minimum temperature rating of 105°C (221°F). Ring terminals are recommended.

Wire Sizes and Insulation

Wire sizes for grounding (earthing), current, voltage, and contact connections are dictated by the terminal blocks and expected load currents. Use the following table as a guide in selecting wire sizes. The grounding conductor should be as short as possible and sized equal to or greater than any other conductor connected to the device, unless otherwise required by local or national wiring regulations.

Connection Type	Minimum Wire Size	Maximum Wire Size
Grounding (Earthing) Connection	14 AWG (2.5 mm^2)	N/A
Current Connection	16 AWG (1.5 mm^2)	10 AWG (5.3 mm^2)
Potential (Voltage) Connection	18 AWG (0.8 mm^2)	14 AWG (2.5 mm^2)
Power, Contact I/O	18 AWG (0.8 mm^2)	10 AWG (5.3 mm^2)

Type Tests

Electromagnetic Compatibility (EMC)

Emissions: IEC 60255-26:2013, Section 7.1
Class A
47 CFR Part 15B
Class A
Canada ICES-001 (A) / NMB-001 (A)

Electromagnetic Compatibility Immunity

Conducted RFI Immunity: IEC 60255-26:2013, Section 7.2.8
10 Vrms

Radiated RFI Immunity: IEC 60255-26:2013, Section 7.2.4
10 V/m (modulated)
IEEE C37.90.2-2004
20 V/m (modulated, >35 V/m peak)

Electrostatic Discharge Immunity: IEC 60255-26:2013, Section 7.2.3
IEEE C37.90.3-2001
2, 4, 6, and 8 kV contact discharge
2, 4, 8, and 15 kV air discharge

Electrical Fast Transient Burst Immunity: IEC 60255-26:2013, Section 7.2.5
Zone A
4 kV, 5 kHz repetition rate on power supply I/O, signal data, and control lines
2 kV, 5 kHz repetition rate on communications ports (IRIG)

Power Frequency Immunity: IEC 60255-26:2013, Section 7.2.9
Zone A

Power Frequency Magnetic Field Immunity: IEC 60255-26:2013, Section 7.2.10
Level 5
1000 A/m for 3 s
100 A/m for 60 s

Pulse Magnetic Field Immunity: IEC 61000-4-9:2001
Level 5
1000 A/m

Damped Oscillatory Magnetic Field: IEC 61000-4-10:2001
Level 5
100 A/m at 100 kHz and 1 MHz

Power Supply Immunity: IEC 60255-26:2013, Section 7.2.11, 7.2.12, and 7.2.13
IEC 60255-27:2013, Section 5.1.3, 10.6.6

Surge Immunity: IEC 60255-26:2013, Section 7.2.7
Zone A
Line-to-line: 0.5, 1.0, 2.0 kV
Line-to-earth: 0.5, 1.0, 2.0, 4.0 kV

Surge Withstand Capability Immunity and Damped Oscillatory Wave Immunity: IEC 60255-26:2013, Section 7.2.6
2.5 kV peak common mode
1.0 kV peak differential mode
1 MHz damped oscillatory
IEEE C37.90.1-2012
2.5 kV oscillatory
4.0 kV fast transient
2.5 kV, 1 MHz damped oscillatory

Environmental

Cold, Operational: IEC 60255-27:2013, Section 10.6.1.2
Test Ad: 16 hours at –40°C

Dry Heat, Operational: IEC 60255-27:2013, Section 10.6.1.1
Test Bd: 16 hours at +85°C

Damp Heat, Cyclic: IEC 60255-27:2013, Section 10.6.1.6
Test Db: +25°C to +55°C, 6 cycles (12 + 12-hour cycle), 95% RH

Damp Heat, Steady State: IEC 60255-27:2013, Section 10.6.1.5
Test Cab: 93% RH, +40°C, 10 days

Object Penetration: IEC 60255-27:2013, Section 10.6.2.6
Protection Class: IP30

Vibration Resistance: IEC 60255-27:2013, Section 10.6.2.1
Class 2 Endurance, Class 2 Response

Shock Resistance: IEC 60255-27:2013, Section 10.6.2.2, 10.6.2.3
Class 1 Shock Withstand, Class 1 Bump Withstand, Class 2 Shock Response

Seismic: IEC 60255-27:2013, Section 10.6.2.4
Class 2 Quake Response

Safety

Dielectric Strength: IEC 60255-27:2013, Section 10.6.4.3
IEEE C37.90-2005, Section 8
2.2 kVdc: IRIG-B
2.5 kVrms: Analog Inputs, Digital Inputs, and Digital Outputs
3.6 kVdc: Power Supply

Impulse: IEC 60255-27:2013, Section 10.6.4.2
IEEE C37.90-2005, Impulse Section
2.5 kV: IRIG-B
5.0 kV: Analog Inputs, Digital Inputs, Digital Outputs, and Power Supply

Product Safety Requirements: IEC 60255-27:2013

Laser Safety: 21 CFR 1040.10
IEC 60825-1:2014
Class 1

Reporting Functions

Fault Locator

Methods: Double-ended and single-ended traveling-wave; double-ended and single-ended impedance

Communications Port for Double-Ended Methods: User-selectable, Port 1, 2, 3, or 6

Time Synchronization Requirements: None for single-ended methods or when using Port 6
High-accuracy IRIG-B when using Port 1, 2, or 3

Data Presentation: Summary report, event report (IEEE COMTRADE[1] header file), local relay HMI, supported SCADA protocols

[1] IEEE Std C37.111-2013 (IEC 60255-24:2013), *Measuring Relays and Protection Equipment – Part 24: Common Format for Transient Data Exchange (COMTRADE) for Power Systems*.

Double-Ended Traveling-Wave-Based Method

Channel Requirements: Direct point-to-point fiber on Port 6 or IEEE C37.94 multiplexed channel on user-selectable Port 1, 2, or 3 with a high-accuracy clock at both line terminals and channel latency less than 30 ms

Device Accuracy[1]: 20 m (90th percentile error), 10 m (median error)

[1] Tested with a current step

Application Accuracy: 300 m typical, see *Accuracy Analysis on page 4.8*

Number of Nonhomogeneous Line Sections:	Up to 5
CT Cable Length Compensation:	0.000 to 10.000 µs

Single-Ended Traveling-Wave-Based Method

Device Accuracy[1]:	20 m (90th percentile error), 10 m (median error)

[1] Tested with a current step

Application Accuracy:	300 m typical, see *Accuracy Analysis on page 4.10*
Number of Ranked Fault Location Candidates Reported:	Up to 4
CT Cable Length Compensation:	Not required

Double-Ended Impedance-Based Method

Channel Requirements:	Direct point-to-point fiber on Port 6
Method:	Negative-sequence line voltage profile (unbalanced faults) or positive-sequence line voltage profile (three-phase faults)
Application Accuracy:	See *Accuracy Analysis on page 4.13*

Single-Ended Impedance-Based Method

Method:	Apparent impedance polarized with negative-sequence (unbalanced faults) or positive-sequence (three-phase faults) current
Application Accuracy:	See *Accuracy Analysis on page 4.11*

High-Resolution Event Reports

Sampling Rate:	1 MHz 10 kHz
Maximum Duration:	Three back-to-back 1.2-second events sampled at 1 MHz
Output Format:	Binary 32-bit COMTRADE

Note: IEEE Std. C37.111-2013, Common Format for Transient Data Exchange (COMTRADE) for Power Systems

Event Storage (Summary, History, Events)

Total Storage:	50 records at LER = 1.2 s 300 records at LER = 0.2 s

Sequential Events Recorder

Storage:	10,000 entries
Resolution:	100 µs

Protection Specifications

Sampling and Processing

Currents and Voltages:	Sampled at 1 MHz with 18-bit resolution
TW Calculations:	Every 1 µs
Incremental-Quantity Calculations:	Every 100 µs
Protection Logic Processing:	Every 100 µs

System Configuration

Nominal System Frequency:	50 Hz or 60 Hz
Frequency Tracking Range:	±10 Hz from nominal
Maximum Frequency Slew Rate:	±10 Hz/s
System Phase Rotation:	ABC or ACB
Current Transformer Ratio:	1 to 50000 in steps of 1
Line Current Source:	IW, IX, or COMB
Secondary CT Cable-Delay Compensation:	0.000 to 10.000 µs in steps of 0.001 µs
Potential Transformer Ratio:	1.00 to 10000.0 in steps of 0.01
Nominal Voltage (L-L):	100 to 250 V secondary in steps of 1 V

Line Configuration

Positive-Sequence Line Impedance Magnitude:	
1 A Model:	0.25 to 1275 Ω secondary in steps of 0.01 Ω
5 A Model:	0.05 to 255.00 Ω secondary in steps of 0.01 Ω
Positive-Sequence Line Impedance Angle:	5.00° to 90.00° in steps of 0.01°
Zero-Sequence Line Impedance Magnitude:	
1 A Model:	0.25 to 1275 Ω secondary in steps of 0.01 Ω
5 A Model:	0.05 to 255.00 Ω secondary in steps of 0.01 Ω
Zero-Sequence Line Impedance Angle:	5.00° to 90.00° in steps of 0.01°
Line Length:	0.01 to 500.00 in steps of 0.01
Line Length Unit:	km or mi
TW Line Propagation Time:	10.0 to 1700.0 µs in steps of 0.01 µs
In-Line Series Capacitance:	
1 A Model:	0.00 to 1275 Ω secondary in steps of 0.01 Ω
5 A Model:	0.00 to 255.00 Ω secondary in steps of 0.01 Ω
External Series Compensation:	Y or N

Traveling-Wave Differential Scheme (TW87)

Channel Requirements:	Direct fiber-optic channel One-way channel delay less than 4 ms and less than the TW line propagation time plus 2 ms
External Time Source Requirements:	None
Voltage Requirements:	TW87 requires voltage to operate
TW87 Overcurrent Supervision:	
1 A Model:	0.02 to 2 A secondary in steps of 0.01 A
5 A Model:	0.1 to 10 A secondary in steps of 0.01 A
Blocking Fault Location:	OFF, 0.00 to 1.00 line pu in steps of 0.01
Blocking Fault Location Radius:	0.01 to 0.25 line pu in steps of 0.01
Number of Blocking Fault Location Zones:	2
Operating Time (in ms):	0.5 + 0.0087 • line length (km); or 0.5 + 0.014 • line length (mi)

Note: Operating time is defined from the time the first TW reached the local terminal.

Incremental-Quantity Distance Element (TD21)

Phase Reach:	OFF, 0.10 to 0.90 pu of line length in steps of 0.01
Ground Reach:	OFF, 0.10 to 0.90 pu of line length in steps of 0.01

Operating Time:	<5 ms typical for bolted faults; <50% of the reach and SIR <1
Transient Overreach:	<10%

Note: Operating time is defined from the time the first TW reached the local terminal.

Traveling-Wave Directional Element (TW32)

Application:	Accelerating POTT keying (optional)
Operating Time:	0.1 ms typical

Note: Operating time is defined from the time the first TW reached the local terminal.

Incremental-Quantity Directional Element (TD32)

TD32 Forward Impedance Threshold:	
1 A Model:	0.05 to 1275.0 Ω secondary in steps of 0.01 Ω
5 A Model:	0.01 to 255.0 Ω secondary in steps of 0.01 Ω
TD32 Reverse Impedance Threshold:	
1 A Model:	0.05 to 1275.0 Ω secondary in steps of 0.01 Ω
5 A Model:	0.01 to 255.0 Ω secondary in steps of 0.01 Ω
Operating Time:	<2 ms typical

Note: Operating time is defined from the time the first TW reached the local terminal.

Permissive Overreaching Transfer Trip (POTT)

Operation:	Phase-segregated POTT scheme with TD32 and optionally TW32 via fiber-optic serial ports (SEL MB8 or IEEE C37.94 encoding) or point-to-point fiber-optic channel
POTT Overcurrent Supervision:	
1 A Model:	0.02 to 2 A secondary in steps of 0.01 A
5 A Model:	0.1 to 10 A secondary in steps of 0.01 A

Direct Transfer Trip (DTT)

Operation:	Phase-segregated DTT scheme via fiber-optic serial ports (SEL MB8 or IEEE C37.94 encoding) or point-to-point fiber-optic channel

Monitoring Functions

Adaptive Autoreclose Control

Operation:	Asserts an autoreclose cancel signal based on the fault location obtained with the double-ended traveling-wave fault-locating method for user-settable line sections
Channel Requirements:	Direct fiber-optic on Port 6 or IEEE C37.94 channel on user-selectable Port 1, 2, or 3 with a high-accuracy clock at both line terminals and channel latency less than 30 ms
Number of Autoreclose Blocking Regions:	2
Default Output if Fault Locating Fails:	Cancel or allow reclosing (user-selectable)

Line Monitor

Operation:	Detects, locates, tabulates, and alarms on fault precursors. Provides blocking regions for line taps with load or generation, or in-line series capacitors. Tabulates and alarms for total line events outside of the blocking regions and for daily event counts within the blocking regions.
Channel Requirements:	Direct fiber-optic on Port 6 or IEEE C37.94 channel on user-selectable Port 1, 2, or 3 with a high-accuracy clock at both line terminals and channel latency less than 30 ms
Triggering Mechanism:	Low-energy events only, faults only, low-energy events and faults (user-selectable)
Sensitivity:	Current traveling waves at both line terminals greater than 2.5% of peak nominal current
Location Resolution:	0.25 mi or km
Counter Range per Location:	0–255 (counting stops at 255)
Number of Line Monitoring Blocking Regions:	2
Alarm Threshold:	1–200
Data Presentation:	A text file with tabulated event location and count, alarm bits, and alarm locations available over supported SCADA protocols

Metering Accuracy

All metering specifications apply at 20°C and nominal frequency unless otherwise noted.

Current (Local)

Phase Current Magnitude:	±0.2% plus ± 0.001 • Inom (0.05 • Inom – 3 • Inom)
Phase Current Angle:	±1° (0.05 • Inom – 0.2 • Inom) ±0.2° (0.2 • Inom – 3 • Inom)
Sequence Current Magnitude:	±0.3% plus ± 0.001• Inom (0.05 • Inom – 3 • Inom)
Sequence Current Angle:	±1.5° (0.05 • Inom – 0.2 • Inom) ±0.3° (0.2 • Inom – 3 • Inom)

Voltage

Phase Voltage Magnitude:	±0.2% (5–175 V_{L-N})
Phase Voltage Angle:	±0.2° (5–175 V_{L-N})
Sequence Voltage Magnitude:	±0.3% (5–175 V_{L-N})
Sequence Voltage Angle:	±0.3° (5–175 V_{L-N})

Frequency (Input 5–175 V_{L-N}, 40–70 Hz)

Accuracy:	±0.001 Hz

Built-In Testing Functions

Loopback Mode for Mirrored Bits Channels

Purpose:	Troubleshoot a teleprotection channel by allowing the relay to receive its own packets while passing the received teleprotection bits to the downstream logic or substituting them with fail-safe values
Initiation:	SEL ASCII command
Annunciation:	Relay Word bit
Security:	Access Level 2 and time-out

Traveling-Wave Test Mode

Purpose:	Test the TW87 scheme by using only high-frequency signals, without the presence of fundamental frequency components in currents or voltages
Initiation:	SEL ASCII command
Annunciation:	Front-panel LED, Relay Word bit, ALARM output

Security:	Access Level 2 and confirmation of the initiating command from the front panel; time-out

Event Playback

Purpose:	Test protection and fault-locating functions by substituting samples from the local analog-to-digital converter in real time, with values from relay memory (e.g., playing back event records)
Test File Format:	SEL playback file (.ply)
File Conversion:	Playback File Conversion Utility in QuickSet converts compliant C37.111 COMTRADE files into the SEL-T400L-compatible SEL playback file
Sampling Rate:	1 MHz, with the conversion software utility accepting and resampling files recorded or simulated at a fixed sampling rate of 1, 2, 4, 8, or 10 kHz or 1, 2, 3, 4, or 5 MHz
Test File Storage:	As many as five files in addition to storage for relay records
Test File Duration:	0.1–1.2 s
Pre-Event:	Pre-event steady-state emulation by looping the first cycle in the test file for 1 second; requires at least 50 ms of pre-event steady-state data in the input COMTRADE file
Test Trigger:	Manual (on demand) or time-based (scheduled and synchronized to absolute time for end-to-end testing)
Front-End Circuitry:	Playback File Conversion Utility optionally models the SEL-T400L analog anti-aliasing filters
Initiation:	SEL ASCII command or Event Playback Test Dashboard in QuickSet
Annunciation:	Front-panel HMI message, Relay Word bit, ALARM output
Security:	Access Level 2 and confirmation of the initiating command from the front panel; time-out

This page intentionally left blank

SECTION 2

Protection Elements and Schemes

Introduction

This section describes the SEL-T400L protection functions and includes logic diagrams and general settings guidelines. Each subsection provides explanation of a function, along with a list of corresponding settings and Relay Word bits.

Functions discussed in this section are listed below:

- *Configuration Settings Shared Among Multiple Relay Functions on page 2.3*
- *Arming Logic on page 2.8*
- *Starting Logic on page 2.9*
- *Traveling-Wave Disturbance Detectors on page 2.12*
- *Fault-Type Identification Logic on page 2.13*
- *Incremental-Quantity Directional Element on page 2.13*
- *Incremental-Quantity Distance Element on page 2.17*
- *Overcurrent Supervision Elements on page 2.22*
- *Traveling-Wave Directional Element on page 2.27*
- *Traveling-Wave Differential Scheme on page 2.31*
- *Loss-of-Potential Logic on page 2.42*
- *Open-Pole Detection Logic on page 2.43*
- *Trip Logic on page 2.45*

Figure 2.1 shows a diagram of the overall SEL-T400L protection logic. The logic uses current and voltage traveling waves, instantaneous quantities, incremental quantities, and phasors. *Appendix G: Signal Processing* explains how the SEL-T400L derives and processes these quantities.

This section provides information pertinent to setting and testing the SEL-T400L and describes individual elements in detail, explaining internal logic, Relay Word bits, and settings. When necessary, it explains the theory of operation before describing implementation details.

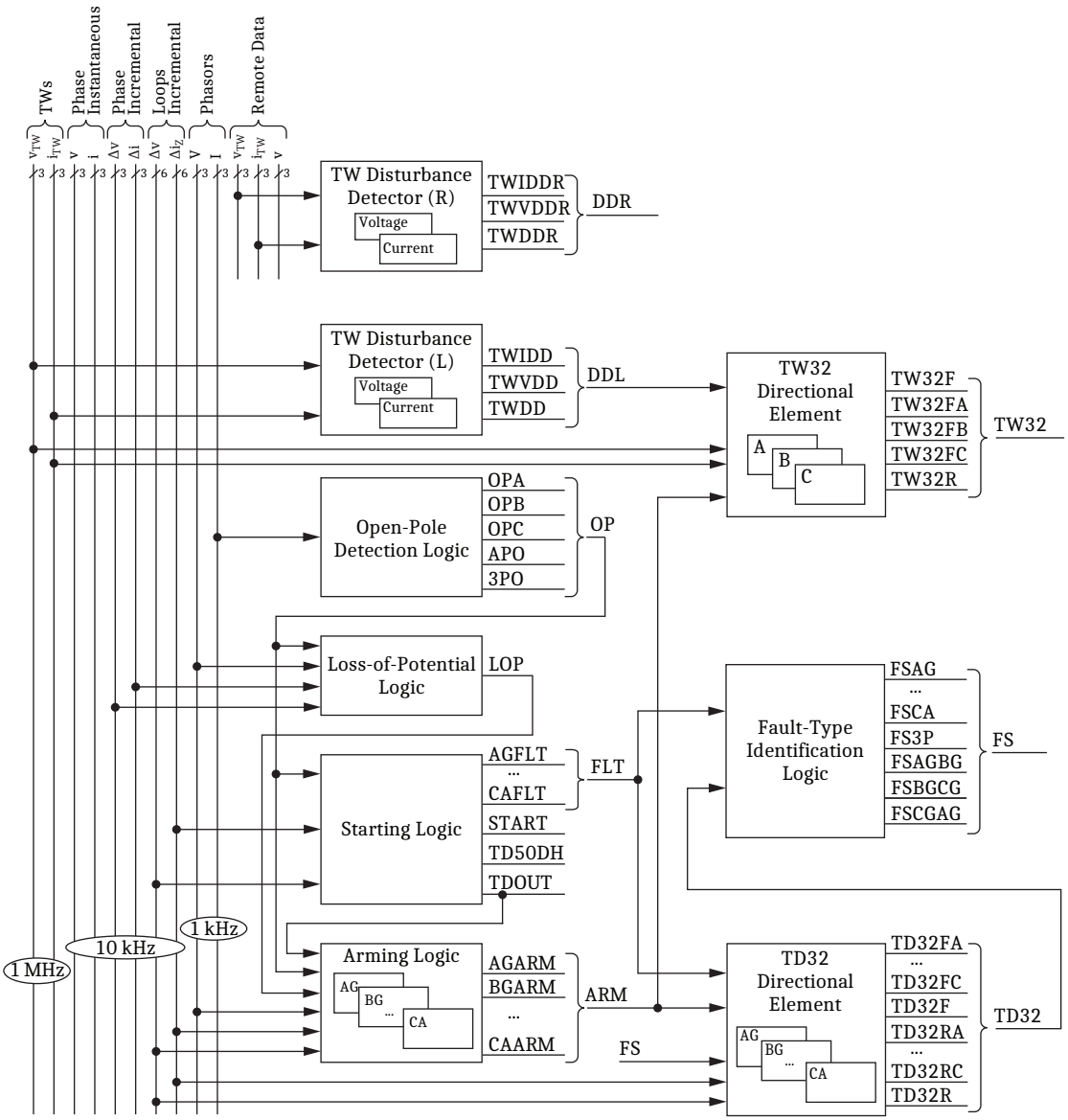

Figure 2.1 Overview of the SEL-T400L Protection Logic

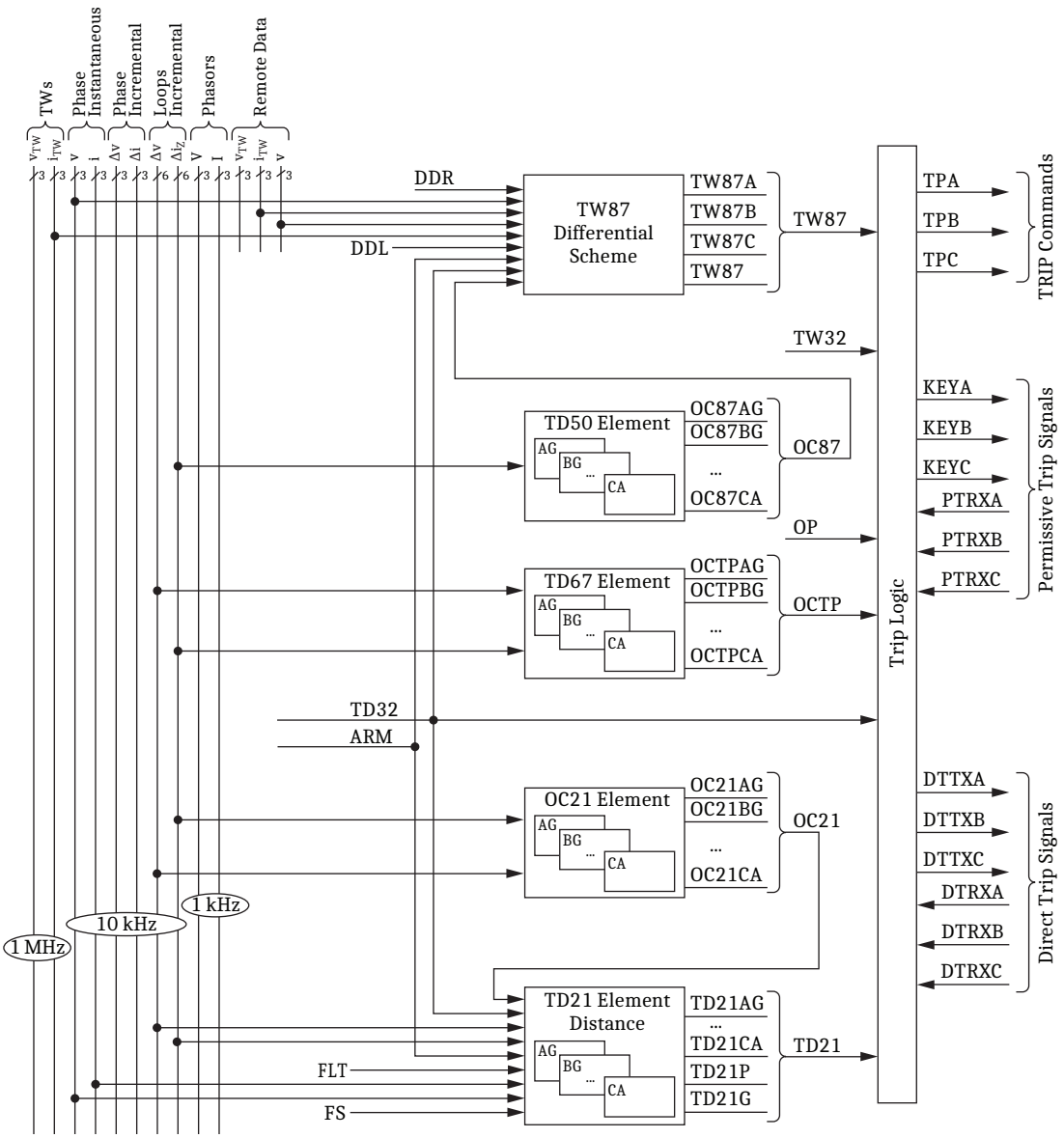

Figure 2.1 Overview of the SEL-T400L Protection Logic (Continued)

Configuration Settings Shared Among Multiple Relay Functions

AC Input Configuration Settings

Protection, metering, and fault-locating functions of the SEL-T400L require common configuration data related to the ac voltages and currents connected to the relay. Obtain these nameplate values from project files and wiring diagrams. *Table 2.1* lists settings related to the ac inputs of the relay.

Table 2.1 AC Input Configuration Settings

Name	Description	Range	Default
NFREQ	Nominal system frequency, Hz	50, 60	60
PHROT	System phase rotation	ABC, ACB	ABC
LINEI	Line current source	IW, IX, COMB	IW
OPCS	Open-pole current source	LINEI, IW, IX	LINEI
CTRW	Current transformer ratio, Input W	1–50000	200
CTRX	Current transformer ratio, Input X	1–50000	200
PTR	Potential transformer ratio	1.00–10000.00	2000.00
VNOM	PT Nominal voltage (L-L), V sec	100–250	115

NFREQ

Use the NFREQ setting to provide the system nominal frequency, 50 or 60 Hz, as appropriate. The relay uses the nominal system frequency to convert settings expressed as impedances or phasor magnitudes into corresponding time-domain parameters for internal use. The relay applies various factory-configured timers set in fractions or multiples of the nominal power system cycle and uses the NFREQ setting to calculate the nominal power system cycle duration. It also uses the nominal system frequency for metering voltage and current phasors when the present system frequency cannot be measured.

PHROT

Use the PHROT setting to provide the system phase rotation, ABC or ACB, as appropriate. The relay uses this setting to calculate the positive- and negative-sequence voltage and current phasors. Ensure this setting is correct; if not, positive- and negative-sequence metering values will be incorrect and some auxiliary logic, especially the loss-of-potential logic, will not work correctly.

LINEI

Use the LINEI setting to specify the line current for protection, fault locating, and metering. Typically, you measure the line current directly using the W current input (set LINEI = IW) or the X current input (set LINEI = IX). In dual-breaker applications, wire both breaker currents separately to the W and X current inputs of the relay, and set LINEI = COMB to instruct the relay to match ratios and add the input W and input X currents for protection, metering, and fault-locating functions. The relay allows a CT ratio mismatch as high as 1:15 between the W and X inputs. When using LINEI = COMB, the effective CT ratio for calculating settings in secondary amperes and ohms is the higher of the input W and X CT ratios. The TW87 scheme allows a CT ratio mismatch as high as 1:10 between the effective local and the effective remote CT ratios. See *Appendix G: Signal Processing* for more information on scaling currents measured with CTs of different ratios.

OPCS

Use the OPCS setting to specify the breaker current for use in the open-pole detection logic. Typically, the breaker current is the same as the line current (set OPCS = LINEI in these cases). In applications with line-side reactors, you may wire the breaker and the reactor currents separately to the W and X current inputs of the relay. The line current is the sum of the two currents; therefore, set LINEI = COMB. However, if you wired the breaker current to the W current input, set OPCS = IW, and if you wired the breaker current to the X current input, set

OPCS = IX. OPCS is an advanced setting with a default of LINEI. Set EADVS = Y to gain access to the OPCS setting. See *Open-Pole Detection Logic on page 2.43* for more information.

CTRW

Use the CTRW setting to specify the CT ratio for the secondary current wired to the W current input of the relay. Note that all current-dependent functions of the relay require this setting. These include metering, auxiliary protection functions, incremental-quantity-based protection elements and schemes, traveling-wave-based protection elements and schemes, and the fault locator. Specify the CTRW setting even if you only intend to use the W current for monitoring or recording purposes (i.e., even when LINEI = IX).

CTRX

Use the CTRX setting to specify the CT ratio for the secondary current wired to the X current input of the relay. Note that all current-dependent functions of the relay require this setting, including metering, auxiliary protection functions, incremental-quantity-based protection elements and schemes, traveling-wave-based protection elements and schemes, and the fault locator. Specify this setting even if you only intend to use the X current for monitoring or recording purposes (i.e., even when LINEI = IW).

PTR

Use the PTR setting to specify the PT ratio for the secondary voltage wired to the voltage input of the relay. Make sure to use this settings value when converting impedance-based settings (Z1MAG, Z0MAG, XC, TD32ZF, and TD32ZR) from primary ohms to secondary ohms.

VNOM

Use the VNOM setting to specify the nominal secondary voltage of the potential transformer wired to the voltage input of the relay. VNOM is the root-mean-square (rms) line-to-line voltage, even though the relay accepts three line-to-neutral voltages through use of a four-wire connection with a common neutral.

Line Configuration Settings

SEL-T400L protection and fault-locating functions require common configuration data related to the power line. *Table 2.2* lists the line configuration settings.

Table 2.2 Line Configuration Settings (Sheet 1 of 2)

Name	Description	Range	Default (5 A)	Default (1 A)
Z1MAG	Positive-sequence line impedance magnitude, Ω secondary	5 A: 0.05–255.00 1 A: 0.25–1275.00	7.80	39.00
Z1ANG	Positive-sequence line impedance angle, degrees	5.00–90.00	84.00	84.00
Z0MAG	Zero-sequence line impedance magnitude, Ω secondary	5 A: 0.05–255.00 1 A: 0.25–1275.00	24.8	124.00
Z0ANG	Zero-sequence line impedance angle, degrees	5.00–90.00	81.50	81.50
LL	Line length (in LLUNITs)	0.01–500.00	100.00	100.00
LLUNIT	Line length unit	mi, km	mi	mi

Table 2.2 Line Configuration Settings (Sheet 2 of 2)

Name	Description	Range	Default (5 A)	Default (1 A)
TWLPT	TW line propagation time, µs	10.00–1700.00	537.00	537.00
XC	Series capacitor reactance, Ω secondary	5 A: 0.00–255.00 1 A: 0.00–1275.00	0.00	0.00
EXTSC	External series compensation	Y, N	N	N

Z1MAG and Z0MAG

Use the Z1MAG and Z0MAG settings to specify the magnitudes of the positive- and zero-sequence line impedances in secondary ohms at the nominal system frequency (defined by the NFREQ setting). When converting primary ohms to secondary ohms, use the PT ratio and the effective CT ratio based on the LINEI setting (CTRW if LINEI = IW, CTRX if LINEI = IX, and max(CTRW, CTRX) if LINEI = COMB). Do not include series capacitors in the Z1MAG and Z0MAG settings; enter the impedances of only the line conductors.

You must ensure accuracy of the Z1MAG, Z0MAG, Z1ANG, and Z0ANG impedance settings because they directly impact performance of protection elements and schemes. For example, the TD21 ground element calculates the zero-sequence compensation from the Z1MAG, Z0MAG, Z1ANG, and Z0ANG settings, and you do not need to enter the k0 factor; and the TD21 element reach setting is in per unit of Z1MAG.

For three- and four-terminal lines, consider entering the sum of impedances for all line sections under the Z1MAG and Z0MAG settings, but make sure to factor in this approach when calculating the TD21 reach settings and when interpreting results of the single-ended impedance-based fault-locating method.

Z1ANG and Z0ANG

Use the Z1ANG and Z0ANG settings to specify the angles of the positive- and zero-sequence line impedances in electrical degrees at the nominal system frequency (defined by the NFREQ setting). Ensure that the angle settings and the magnitude settings are coherent and relate to the same complex impedance value, especially in three- and four-terminal applications.

LL and LLUNIT

Use the LL setting to specify the physical line length in either miles or kilometers. Use the LLUNIT setting to specify your unit of choice. For simplicity, the relay supports a single range for the LL setting regardless of the LLUNIT value. The actual line length is limited to 500 units of length or 1700 µs of traveling-wave propagation time, whichever is shorter.

TWLPT

Use the TWLPT setting to specify the one-way propagation time in microseconds for traveling waves on the protected line. You can expect TWLPT in the order of 333 µs for a 100 km section of an overhead line (or 537 µs for a 100 mi section). SEL recommends measuring the value of this setting during commissioning. See *Section 11: Testing and Commissioning* for more information. The TWLPT value is critical for security of the TW87 protection scheme and for accuracy of TW-based fault-locating methods.

XC

Use the XC setting to specify the total reactance of in-line series capacitors in secondary ohms. An in-line series capacitor is any capacitor located between the potential transformer of the relay and the remote bus (or buses in three- and four-terminal applications). Note that because of the relative location of the PT and series capacitor, the XC settings may be different at different terminals of the protected line (see *Section 6: Settings Guidelines* for more information and examples). Use the same PT ratio and the effective CT ratio when converting the XC values from primary ohms to secondary ohms as for the other impedance settings. Enter the capacitive reactance as a positive value. Enter zero for lines without in-line series compensation. Do not factor the XC value in the line impedance settings or the TD21 reach settings.

EXTSC

Use the EXTSC setting to specify the presence (Y) or absence (N) of external series capacitors near the protected line. An external capacitor located near the remote line terminal results in setting EXTSC = Y at the local terminal if the net reactance between the remote terminal and the capacitor (including the capacitor reactance) is negative (see *Section 6: Settings Guidelines* for more information and examples). Note that the local EXTSC setting is affected by capacitors near the remote terminal, and vice versa. EXTSC settings can therefore vary between different terminals of the protected line. If you enabled the TW87 protection scheme and one terminal requires EXTSC = Y, set EXTSC = Y at the other terminal as well.

Advanced Settings

A number of SEL-T400L settings are deemed advanced. These settings typically support a small percentage of applications. Advanced settings include the following:

- Contact input debounce timers
- TW87 scheme blocking regions
- Nonhomogeneous line configuration for double-ended traveling-wave-based fault locating
- Adaptive autoreclose cancel logic
- Forced three-pole trip on a per-breaker basis in single-pole tripping applications
- Current selection for the open-pole detection logic

The Enable Advanced Settings (EADVS) setting, located under General Device Settings, controls access to the advanced SEL-T400L settings. Advanced settings cannot be changed if EADVS = N, and ACSELERATOR QuickSet SEL-5030 Software either hides the settings or shows them as noneditable fields (depending on the **View/Hide Disabled Settings** preference).

After you set advanced settings, you can set EADVS = N to prevent further edits to settings you used or to any other advanced settings that you did not intend to use or modify.

Arming Logic

The arming logic verifies quiescent system conditions to ensure secure operation of the ultra-high-speed and sensitive SEL-T400L time-domain protection elements. If the arming logic is deasserted, the relay inhibits operation of TD32, TW32, and TD21 protection elements as well as the TW87 protection scheme.

The color of the **ARMED** front-panel LED indicates the state of the arming logic (see *ARMED LED Target Logic on page 2.60* for more information).

NOTE: When testing the SEL-T400L, ensure adequate application of prefault test signals to verify assertion of the arming logic before you apply your test signals.

The primary purpose of the arming logic is to verify that the protected line is energized and there are no excessive transients prior to a fault. The relay ultra-high-speed elements and schemes can identify transients from a subsequent line fault and operate for that fault only if the line is energized and in a quiescent state.

The arming logic requires no dedicated settings, and therefore you do not need to configure it to apply the SEL-T400L.

Figure 2.2 shows the arming logic simplified diagram for the A-phase-to-ground (AG) ground protection measurement loop of the SEL-T400L. The arming logic declares the AG loop armed if the following conditions are met for at least half of a nominal power system cycle:

- The standing incremental loop voltage and replica current, as reflected by the loop starting voltage (see *Starting Logic on page 2.9*), are small (i.e., the starting voltage is less than a factory threshold). The arming logic allows small prefault incremental currents and voltages so it can operate for faults during power swings or when the system frequency changes.
- The loop voltage phasor magnitude exceeds a factory threshold, signifying that the line is energized. The logic also calculates the remote voltage magnitude from the local voltage and current, and verifies that the remote voltage magnitude is above a threshold.
- The open-pole condition in the phase (or phases) associated with the loop is not asserted, signifying that the protected line is connected to the bus and that it will draw incremental currents from the system under fault conditions (see *Open-Pole Detection Logic on page 2.43*).
- The LOP condition is not asserted, signifying that the relay is receiving accurate voltage information (see *Loss-of-Potential Logic on page 2.42*).
- The TDOUT bit is not asserted (see *Starting Logic on page 2.9*), signifying the time-domain protection elements and schemes are not in an intentional time-out state following a disturbance.

Once armed, the loop remains intentionally armed for a short time period defined by the DPO timer in *Figure 2.2* (e.g., three-quarters of a cycle) to ensure that the starting logic asserts for a fault and releases the SEL-T400L protection elements (see *Starting Logic on page 2.9*).

The arming logic operates on a per-loop basis to support single-pole tripping applications—each of the six loops is armed and disarmed individually.

The arming logic for phase loops is identical to that in *Figure 2.2*, except that it checks: (1) the open-pole condition in both phases associated with the phase loop, and (2) the phase-to-phase voltage for that loop.

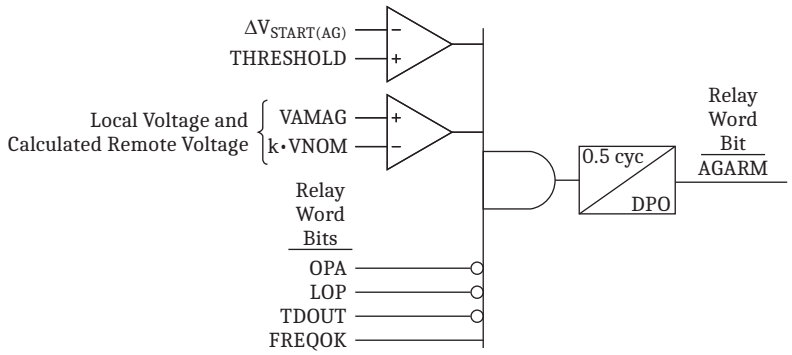

Figure 2.2 Arming Logic Simplified Diagram

Table 2.3 Arming Logic Relay Word Bits

Relay Word Bit	Description
AGARM	AG protection measurement loop armed
BGARM	BG protection measurement loop armed
CGARM	CG protection measurement loop armed
ABARM	AB protection measurement loop armed
BCARM	BC protection measurement loop armed
CAARM	CA protection measurement loop armed
ALPARM	All protection measurement loops armed

Starting Logic

The SEL-T400L incorporates a nondirectional starting logic. The starting logic determines which of the six protection measurement loops are involved in a fault and releases the protection elements associated with these loops. For a multi-phase fault, the logic releases at least one loop involved in the fault (typically a phase loop). The primary function of the starting logic is to release the protection elements in the faulted loops and restrain the protection elements from performing measurements in the healthy loops. The secondary function of the starting logic is to enable the protection logic only during events (including faults) and to prevent measurements on small incremental signals during steady-state conditions and near steady-state conditions.

The starting logic requires no dedicated settings, and therefore you do not need to configure it to apply the SEL-T400L.

The incremental loop voltage (Δv) and the incremental replica loop current (Δi_Z) are used in *Equation 2.1* to calculate the starting voltage (Δv_{START}). The starting voltage is a voltage change at an electrical distance Z_X away from the relay (see *Figure 2.3*):

$$\Delta v_{START} = |\Delta v| + Z_X \bullet |\Delta i_Z|$$

Equation 2.1

The starting logic uses the distance Z_X as the positive-sequence line impedance magnitude Z1MAG plus margin for dependability.

Table G.4 lists and explains the six incremental loop voltages (Δv) and replica currents (Δi_Z).

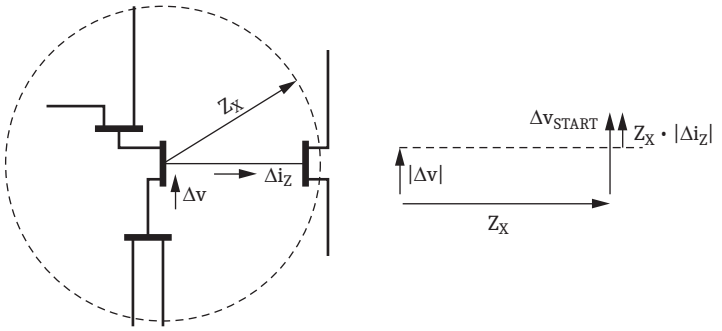

Figure 2.3 Starting Logic Principle of Operation

As discussed previously, for the arming logic to assert, the starting voltage must be less than a factory-selected threshold for a fraction of a power cycle (see *Arming Logic on page 2.8*). When the arming logic is asserted, the starting logic declares a given loop as involved in the fault if the starting voltage exceeds a factory-selected threshold. The threshold ensures maximum sensitivity considering the measuring range and accuracy of the SEL-T400L.

The absolute values of starting voltages depend on the distance to fault, the fault resistance, system and line impedances, and the fault type. Regardless of these factors, the starting voltages are greater in loops involved with the fault than in healthy loops. The starting logic compares the six starting voltages for each of the protection measurement loops with one another to identify the loops involved in the fault (see *Figure 2.4*). The SEL-T400L applies an advanced algorithm to identify faulted loops and release the time-domain protection elements of the faulted loops while it holds back the protection elements for the healthy loops.

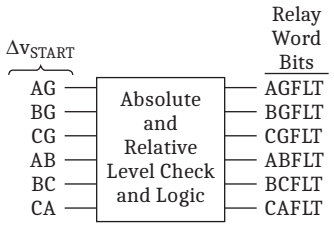

Figure 2.4 Faulted-Loop Identification Logic

Do not confuse the starting logic with the fault-type identification logic (see *Fault-Type Identification Logic on page 2.13*). The starting logic serves as a rudimentary fault-type identification. It releases incremental-quantity protection elements in loops that involve the faulted phases. The fault-type identification logic receives the outputs from some of these protection elements and provides accurate fault-type identification for targeting, fault locating and fault reporting, and single-pole tripping purposes.

The starting logic marks the beginning of a disturbance by asserting the START bit when at least one of six protection measurement loops declares a disturbance (see *Figure 2.5*). The START bit remains asserted for one power system cycle, after which it deasserts to indicate that the incremental quantities are no longer valid (the incremental quantities are calculated through use of a one-cycle buffer; see *Appendix G: Signal Processing* for more information).

The SEL-T400L releases incremental-quantity protection elements for operation only when the START bit is asserted. After START bit deassertion, the TDOUT bit asserts and disables the arming logic for a time-out period (DPO). Once the TDOUT bit deasserts (e.g., in 100 ms), the arming logic can arm again and qual-

ify the protection measurement loops for the next disturbance. The time-out period is necessary for the relay to acquire new steady-state voltages and currents as a reference for the incremental quantities.

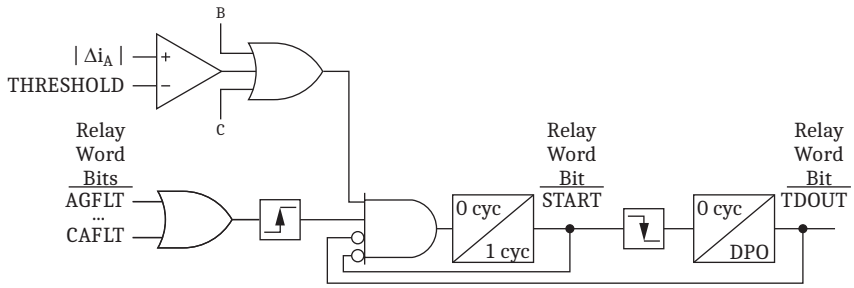

Figure 2.5 Starting and Time-Out Logic

The SEL-T400L starting logic includes a sensitive current-only disturbance detector for a number of auxiliary functions such as loss-of-potential logic, supervision of received direct transfer trip bits for security, and detection of the fault time for prefault and fault data capture for fault reporting and fault locating. *Figure 2.6* shows the disturbance detection logic. The output Relay Word bit TD50DH asserts if the incremental current in any phase exceeds a factory-selected threshold.

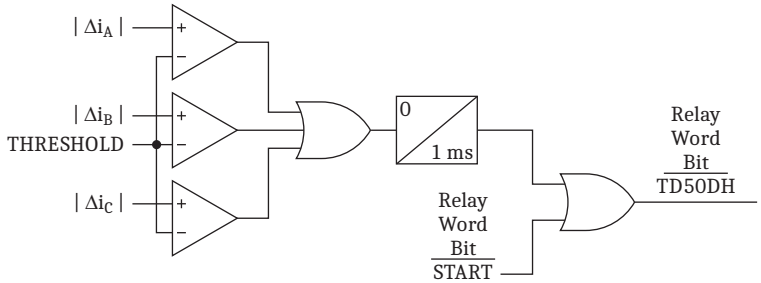

Figure 2.6 TD50DH Disturbance Detection Logic

Table 2.4 Starting Logic Relay Word Bits

Relay Word Bit	Description
AGFLT	AG protection measurement loop released
BGFLT	BG protection measurement loop released
CGFLT	CG protection measurement loop released
ABFLT	AB protection measurement loop released
BCFLT	BC protection measurement loop released
CAFLT	CA protection measurement loop released
START	Starting logic asserted
TDOUT	Time-out following a protection start
TD50DH	Sensitive current disturbance detector asserted

Traveling-Wave Disturbance Detectors

The SEL-T400L incorporates TW disturbance detectors. These are very sensitive traveling-wave-based elements that trigger on voltage or current changes. The SEL-T400L uses disturbance detectors to mark state transition from prefault to fault and to control various relay security features.

The TW32 protection element, the TW87 protection scheme, and the traveling-wave fault-locating methods use disturbance detectors to trigger the collection of TW information associated with the fault.

NOTE: Consider using disturbance detectors for triggering the SEL-T400L recording functions, especially when investigating high-frequency phenomena related to faults or switching events.

The TW disturbance detection logic requires no dedicated settings, and therefore you do not need to configure it to apply the SEL-T400L.

Figure 2.7 illustrates a simplified logic diagram of the TW disturbance detection logic. The logic responds to the sum of the traveling-wave signals from all three phases (see *Appendix G: Signal Processing*). The background noise estimator monitors the standing noise and establishes an adaptive threshold for the comparator.

Identical logic monitors line currents (TWIDD output) and line voltages (TWVDD output). If the point-to-point fiber-optic channel is installed on Port 6, the logic also monitors remote currents and voltages (TWIDDR and TWVDDR outputs).

The relay processes TW disturbance detection logic every microsecond and processes the output Relay Word bits in the 10 kHz protection logic (i.e., every 0.1 ms).

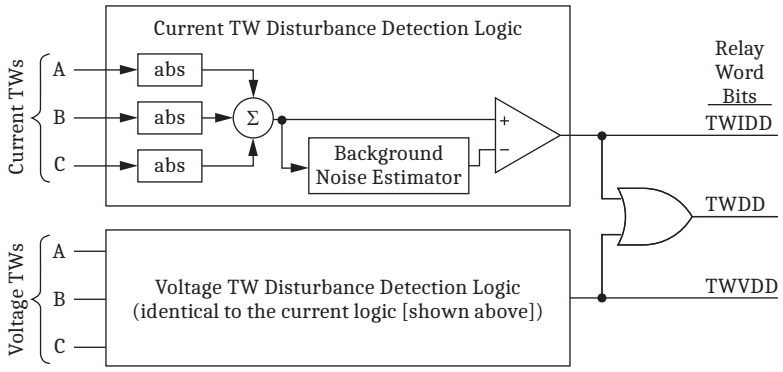

Figure 2.7 TW Disturbance Detection Simplified Diagram

Table 2.5 Disturbance Detectors Relay Word Bits

Relay Word Bit	Description
TWDD	Traveling-wave disturbance detector asserted
TWIDD	Traveling-wave current disturbance detector asserted
TWVDD	Traveling-wave voltage disturbance detector asserted
TWDDR	Remote traveling-wave disturbance detector asserted
TWIDDR	Remote traveling-wave current disturbance detector asserted
TWVDDR	Remote traveling-wave voltage disturbance detector asserted

Fault-Type Identification Logic

The SEL-T400L incorporates fault-type identification logic based on incremental quantities to select the correct phase for single-pole tripping and for accurate fault reporting and targeting.

The fault-type identification logic requires no dedicated settings, and therefore you do not need to configure it to apply the SEL-T400L.

The fault-type identification logic uses an advanced algorithm to analyze the output from the starting logic (see *Starting Logic on page 2.9*) and the output from the raw TD32 incremental directional elements (see *Incremental-Quantity Directional Element on page 2.13*). Both the starting logic and the raw TD32 logic operate on a per-loop basis. By inspecting both outputs, the fault-type identification logic distinguishes between a single multiphase fault and an evolving external/internal fault (two concurrent single-line-to-ground faults, one fault forward and the other fault reverse).

The SEL-T400L uses phase-segregated direct trip and permissive trip communications. Using the fault-type identification logic, the phase-segregated communications-assisted protection schemes trip correct phases for evolving faults in single-pole tripping applications.

Table 2.6 Fault-Type Identification Logic Relay Word Bits

Relay Word Bit	Description
FSAG	AG fault
FSBG	BG fault
FSCG	CG fault
FSAB	AB fault
FSBC	BC fault
FSCA	CA fault
FS3P	Three-phase fault
FSAGBG	Evolving external/internal AG and BG fault
FSBGCG	Evolving external/internal BG and CG fault
FSCGAG	Evolving external/internal CG and AG fault

Incremental-Quantity Directional Element

The incremental-quantity TD32 directional element provides fast, secure, and dependable directional indication. The TD32 element is intended for the permissive overreaching transfer trip (POTT) scheme, but it is also used to supervise the TW87 protection scheme on series-compensated lines (see *Traveling-Wave Differential Scheme on page 2.31*) and the TD21 protection element (see *Incremental-Quantity Distance Element on page 2.17*).

NOTE: It is critical that you always set the TD32 element irrespective of which SEL-T400L protection you enable and configure to trip.

The SEL-T400L is designed to protect overhead transmission lines. However, with careful engineering and analysis, you can also use the SEL-T400L for applications on hybrid lines with a combination of overhead sections and underground cable sections. Refer to *Section 6: Settings Guidelines* to determine if the TD32 protection element is applicable to any given hybrid line with both overhead and underground sections.

The TD32 directional element requires two settings: TD32ZF and TD32ZR. These settings depend on the line and system impedances. You do not need a detailed knowledge of the TD32 internal logic to apply and test the TD32 directional element. However, when testing the TD32 element, you must keep your test signals consistent with line and system impedances. Refer to *Section 11: Testing and Commissioning* for more information on how to test the TD32 element.

The TD32 directional element compares polarities of the incremental loop voltage (Δv) and the incremental replica loop current (Δi_Z). As *Appendix G: Signal Processing* explains, the SEL-T400L calculates the incremental replica loop current in such a way that the relationship between the incremental loop voltage and the incremental replica loop current is as if for a purely resistive circuit. More specifically, the following holds true (see *Figure 2.8*).

For forward faults:

$$\Delta v = -\left|Z_{1S}\right| \bullet \Delta i_Z$$

Equation 2.2

where Z_{1S} is the positive-sequence impedance of the system behind the relay.

For reverse faults:

$$\Delta v = +\left|Z_{1L} + Z_{1R}\right| \bullet \Delta i_Z$$

Equation 2.3

where Z_{1L} is the positive-sequence line impedance and Z_{1R} is the positive-sequence impedance of the remote system.

Table G.4 lists and explains the six incremental loop voltages (Δv) and replica currents (Δi_Z).

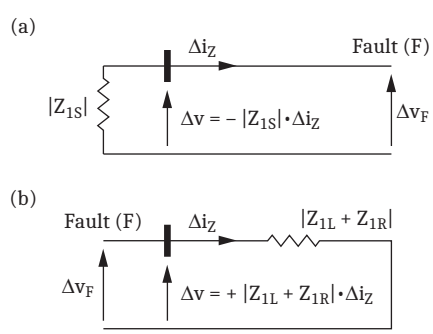

Figure 2.8 TD32 Operating Principle: (a) Forward- and (b) Reverse-Fault Conditions

Figure 2.9 illustrates a simplified logic diagram of the TD32 logic. The logic operates independently in each of the six protection measurement loops. It calculates the operating torque as a product of the incremental loop voltage and the incremental replica loop current. It inverts the sign of the product so that a positive torque indicates forward direction.

For forward faults, the expected value of the operating torque is $|Z_{1S}| \bullet \Delta i_Z^2$. The TD32 logic uses a fraction of this expected value, TD32ZF $\bullet \Delta i_Z^2$, as an adaptive forward restraining torque for the TD32 forward comparator. You must set the element setting TD32ZF lower than the lowest positive-sequence impedance magnitude of the local system (the impedance of the strongest system).

For reverse faults, the expected value of the operating torque is $-|Z_{1L} + Z_{1R}| \bullet \Delta i_Z^2$. The TD32 logic uses a fraction of this expected value, $-TD32ZR \bullet \Delta i_Z^2$, as an adaptive reverse restraining torque for the TD32 reverse comparator. You must set the element setting TD32ZR lower than the positive-sequence impedance magnitude of the line and the strongest remote system.

The TD32 logic integrates the operating and restraining torques. The starting logic, shown in *Figure 2.9*, controls the integrators. Integration of restraining torques occurs upon first detection of a disturbance for as long as the incremental quantities are valid (i.e., the START bit remains asserted). Operating-torque integration for any given protection measurement loop occurs only if that loop was armed prior to the disturbance, the starting logic has asserted for the loop, and the START bit is asserted to signify that the incremental quantities remain valid. The RUN control input for the operating-torque integrator comes from logic that checks whether the ARM input has been asserted at the rising edge of the FLT input. If so, the logic allows the FLT input to assert the supervision (SUP) output. If not, the logic ignores the FLT input, the SUP output is deasserted, and the operating-torque integrator does not integrate.

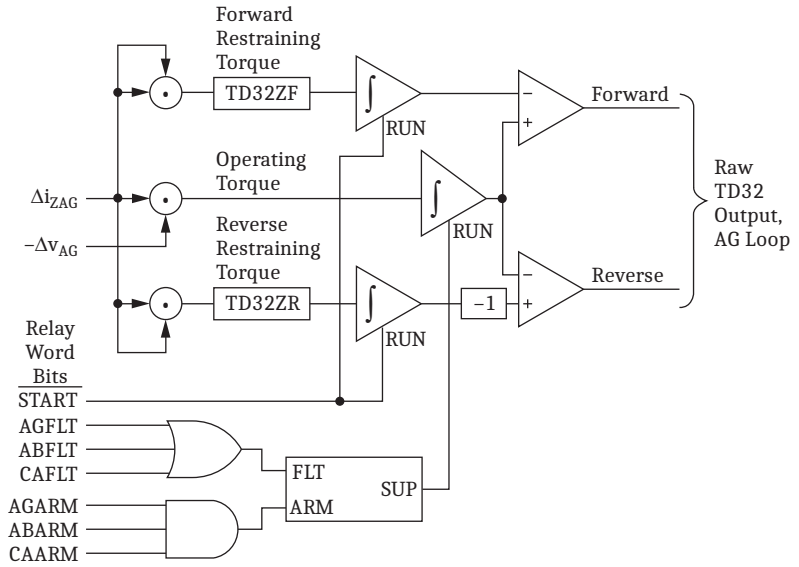

Figure 2.9 TD32 Simplified Logic Diagram (AG Loop Shown)

The TD32 logic adds small fixed offsets to the integrated restraining torques to cover cases in which very low incremental replica loop current yields very small restraining torques.

The forward restraining torque is always positive, and the reverse restraining torque is always negative. The TD32 logic asserts in the forward direction if the integrated operating torque is positive and greater than the integrated forward restraining torque. The TD32 logic asserts in the reverse direction if the integrated operating torque is negative and greater—in terms of an absolute value—than the integrated reverse restraining torque.

The TD32 logic conditions the raw outputs shown in *Figure 2.9* by supervising them with the fault-type identification information (see *Fault-Type Identification Logic on page 2.13*).

The TD32 element asserts the TD32FΦ element (Φ = A, B, C) if the corresponding phase is involved in a forward fault in one of two possible scenarios: either a single fault occurred in the forward direction from the relay, or two single-phase-to-ground faults occurred almost simultaneously and the fault involving the Φ-phase is in the forward direction.

The TD32 element asserts the TD32RΦ element (Φ = A, B, C) if the corresponding phase is involved in a reverse fault in one of two possible scenarios: either a single fault occurred in the reverse direction from the relay, or two single-phase-to-ground faults occurred almost simultaneously and the fault involving the Φ-phase is in the reverse direction.

For example, for an ABG fault on the protected line, the TD32FA and TD32FB bits assert while the TD32FC, TD32RA, TD32RB, and TD32RC bits remain deasserted. For an evolving CG reverse and BG forward fault, the TD32FB and TD32RC bits assert while the TD32FA, TD32FC, TD32RA, and TD32RB bits remain deasserted.

For convenience, the TD32 logic consolidates the three TD32FΦ bits into a single bit, TD32F (an OR gate). Similarly, TD32R is the OR combination of the three TD32RΦ bits. Note that during external/internal evolving faults, TD32F and TD32R may both assert because some loops may correctly measure a forward fault while some other loops may correctly measure a simultaneous reverse fault.

Table 2.7 TD32 Element Relay Word Bits

Relay Word Bit	Description
TD32FA	Phase A forward TD32 directional element asserted
TD32FB	Phase B forward TD32 directional element asserted
TD32FC	Phase C forward TD32 directional element asserted
TD32F	TD32 directional element asserted forward
TD32RA	Phase A reverse TD32 directional element asserted
TD32RB	Phase B reverse TD32 directional element asserted
TD32RC	Phase C reverse TD32 directional element asserted
TD32R	TD32 directional element asserted reverse

Table 2.8 TD32 Element Settings

Name	Description	Range	Default (5 A)	Default (1 A)
TD32ZF	Forward impedance threshold (Ω, secondary)	5 A: 0.01–255.00 1 A: 0.05–1275.00	0.2	1.00
TD32ZR	Reverse impedance threshold (Ω, secondary)	5 A: 0.01–255.00 1 A: 0.05–1275.00	0.2	1.00

Follow these general settings recommendations when selecting the TD32 element settings.

TD32ZF

Set the forward impedance threshold, TD32ZF, less than the magnitude of the positive-sequence system impedance behind the relay, assuming the strongest local system configuration. Use your short-circuit program to obtain the local system positive-sequence equivalent impedance. SEL recommends a margin of 70 percent (set TD32ZF to 0.3 of the minimum system impedance).

The TD32ZF setting is set in secondary ohms on the effective CT ratio base and is a positive number signifying the magnitude of the impedance.

TD32ZR

Set the reverse impedance threshold, TD32ZR, less than the magnitude of the sum of the positive-sequence line impedance and the positive-sequence remote system impedance, assuming the strongest remote system configuration. For simplicity, SEL recommends disregarding the remote system impedance (except for a short line and a weak source) and applying a margin of 70 percent of the positive-sequence line impedance (set TD32ZR to 0.3 of the line positive-sequence impedance). For applications with in-line series capacitors, use the net line impedance when calculating the TD32ZR setting.

The TD32ZR setting is set in secondary ohms on the effective CT ratio base, and the settings value is a positive number signifying the magnitude of the impedance.

Refer to *Section 6: Settings Guidelines* for more detailed step-by-step instructions on selecting SEL-T400L protection settings.

Incremental-Quantity Distance Element

The incremental-quantity TD21 distance element provides instantaneous underreaching line protection. Use it for tripping directly without communications.

The SEL-T400L is designed to protect overhead transmission lines. However, with careful engineering and analysis, you can consider the SEL-T400L for applications on hybrid lines consisting of a combination of overhead sections and underground cable sections. Refer to *Section 6: Settings Guidelines* to determine if the TD21 protection element is applicable to any given hybrid line with both overhead and underground sections.

The TD21 distance element requires two traditional phase and ground distance reach settings: TD21MP and TD21MG. You do not need detailed knowledge of the TD21 internal logic to apply and test the TD21 distance element. However, when testing the TD21 element, you must keep your test signals consistent with line and system impedances. Refer to *Section 11: Testing and Commissioning* for information on how to test the TD21 element.

The TD21 distance element calculates, in the time domain, the change in the voltage at the set reach point by using the measured currents and voltages at the relay location and the line resistance (R) and inductance (L) parameters. The maximum possible change in the reach point voltage occurs during zero-resistance faults. For such faults, the voltage drops from the prefault value to zero, resulting in a change in voltage as high as the prefault voltage (but not higher).

As *Figure 2.10* illustrates, when a zero-resistance fault occurs beyond the set reach (F_1), the calculated voltage change at the reach point (v_{OP1}) is lower than the prefault voltage at the reach point (v_{RT}). When a zero-resistance fault occurs short of the set reach (F_2), the calculated voltage change at the reach point (v_{OP2}) is higher than the prefault voltage at the reach point (v_{RT}).

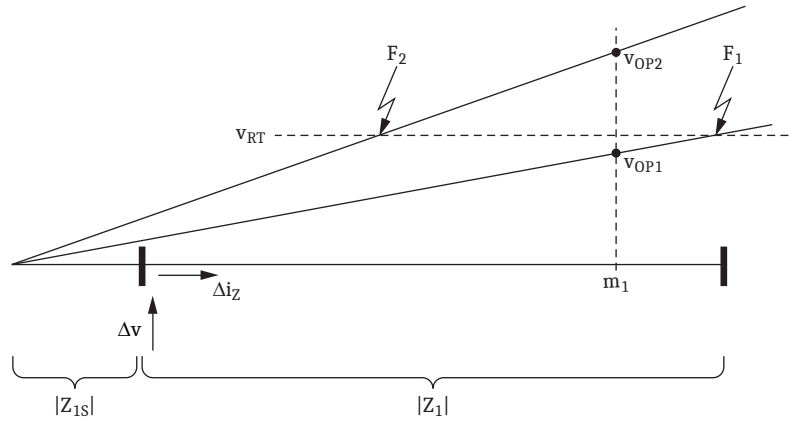

Figure 2.10 TD21 Operating Principle

The TD21 element calculates v_F, the voltage at the reach point, as follows:

$$v_F = v - m_1 \bullet |Z_1| \bullet i_Z$$

Equation 2.4

where m_1 is the set reach in per unit of the line impedance, $|Z_1|$, v is the voltage at the relay, and i_Z is the replica current at the relay.

The element calculates an operating signal, $v_{OP(t)}$, from the change in the voltage at the reach point as follows:

$$v_{OP(t)} = v_{F(t)} - v_{F(t-1\,cycle)} = \Delta v - m_1 \bullet |Z_1| \bullet \Delta i_Z$$

Equation 2.5

where $v_{F(t)}$ is the present voltage at the fault, and $v_{F(t-1\ cycle)}$ is the prefault voltage from one power cycle ago.

The element uses the prefault value of the voltage at the reach point as a restraining signal $v_{RT(t)}$ as follows:

$$v_{RT(t)} = v_{F(t-1\,cycle)}$$

Equation 2.6

Table G.4 lists and explains the six incremental loop voltages (Δv) and replica currents (Δi_Z).

The operating and restraining signals are signed instantaneous values. The TD21 logic compares the operating and restraining signals, considering the relative signs of the operating and restraining signals as follows:

- If the restraining signal (v_{RT}) is positive, the fault occurred on the positive half of the voltage wave, and the voltage will move down toward zero in response to the fault. In this case, the incremental change in voltage is negative.
- If the restraining signal (v_{RT}) is negative, the fault occurred on the negative half of the voltage wave, and the voltage will move up toward zero in response to the fault. In this case, the incremental change in voltage is positive.

For improved security, the TD21 element requires not only that the absolute value of the operating signal be higher than the absolute value of the restraining signal, but also that the two signals be of opposite polarities. *Figure 2.11* illustrates the operating region (hatched areas) of the TD21 element.

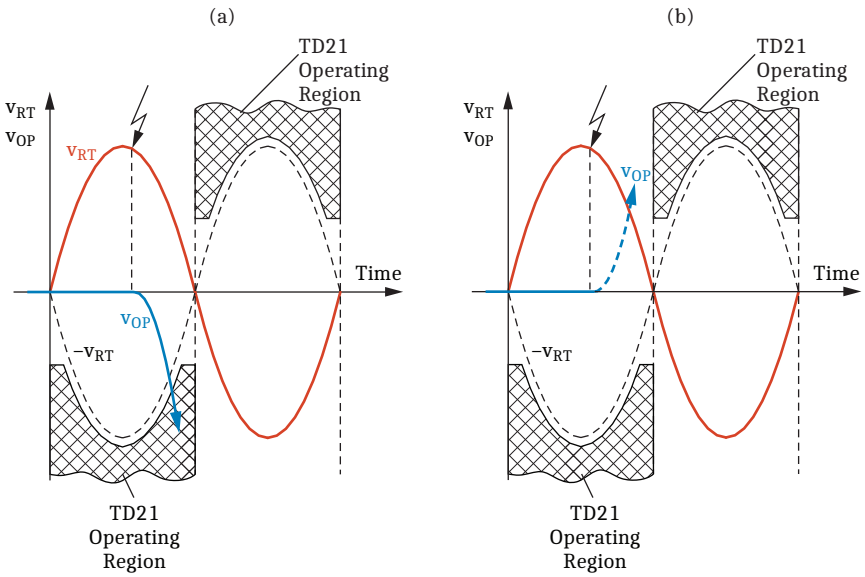

Figure 2.11 Effective Operating Region of the TD21 Element: (a) Voltage Collapse During a Legitimate Fault, and (b) Voltage Increase Resulting From a Switching Event

The restraining signal is a prefault voltage that appears as a sinusoidal wave. To implement the TD21 polarity check, the TD21 logic inverts the sign of the restraining voltage. For greater security, it also adds a small margin around the inverted voltage. The logic also uses a minimum level for the restraining signal for those times when the prefault sine wave crosses zero. *Figure 2.11* shows the effective operating region as a hatched area. The TD21 element picks up if the operating signal enters the hatched area in *Figure 2.11*. The element does not pick up if the operating signal exceeds the restraining signal but has the incorrect (same) polarity.

In applications with external series compensation at the remote line terminal (EXTSC setting is Y), the TD21 element does not apply a time-varying restraining signal (shown in *Figure 2.11*), but uses the peak nominal voltage with a security margin for the restraint (see *Figure 2.12*).

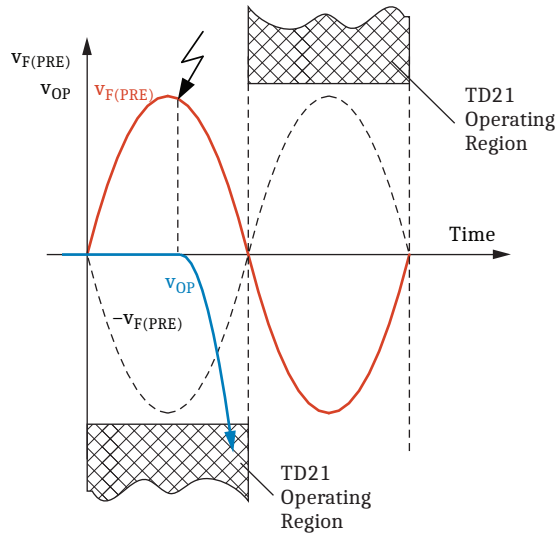

Figure 2.12 Effective Operating Region of the TD21 Element for Applications With External Series Capacitors

Figure 2.13 illustrates a simplified logic diagram of the TD21 element. The logic operates independently in each of the six protection measurement loops to calculate the difference between the operating signal and the effective restraining signal, considering their polarities as shown in *Figure 2.11* and *Figure 2.12*. The TD21 logic integrates the margin by which the operating signal is inside the operating region. The logic allows the integrator to integrate if the loop has been armed prior to the fault and the starting logic has started it (released RUN control) during the fault.

The RUN control input for the integrator comes from logic that checks whether the ARM input has been asserted at the rising edge of the FLT input. If so, the logic allows the FLT input to assert the supervisory (SUP) output. If not, the logic ignores the FLT input, the SUP output is deasserted, and the TD21 integrator does not integrate.

The raw TD21 output asserts when the integrated difference exceeds a security margin, the TD32 measurement in the loop indicates a forward direction, and the built-in OC21 overcurrent supervision in the loop is asserted.

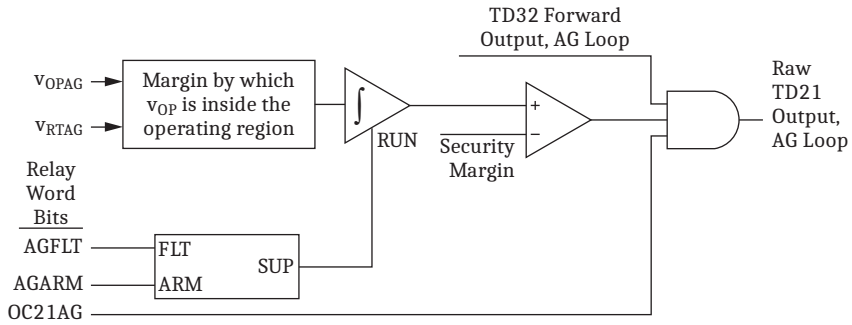

Figure 2.13 TD21 Simplified Logic Diagram (AG Loop Shown)

The built-in overcurrent supervision uses the logic as described in *Overcurrent Supervision Elements on page 2.22*. The pickup threshold for the overcurrent supervision condition is factory-defined as follows.

The TD21 protection element is an underreaching element that must not respond to faults beyond the TD21 reach. The TD21 element responds to the voltage change at the reach point. For security, the element verifies that this voltage differs from the voltage change at the remote terminal by a margin higher than the steady-state and transient accuracy of the relay. In other words, the voltage profile line shown in *Figure 2.10* must slope enough to leave a margin between the value at the reach point and the remote bus. This voltage margin is a voltage drop across the line section between the set reach (m_1) and the remote bus, caused by the current measured at the relay [$(1 - m_1) \bullet |Z_1| \bullet |\Delta i_Z|$]. This voltage margin must exceed a certain minimum value (V_{MIN}, where V_{MIN} is a factory-selected fraction of V_{NOM}) for the TD21 element to operate:

$$(1 - m_1) \bullet |Z_1| \bullet |\Delta i_Z| > V_{MIN}$$

Equation 2.7

The condition given by *Equation 2.7* is equivalent to the following overcurrent condition:

$$|\Delta i_Z| > \frac{V_{MIN}}{(1 - m_1) \bullet |Z_1|}$$

Equation 2.8

The overcurrent threshold (defined by the right side of *Equation 2.8*) is not a setting, but it depends on the Z1MAG and TD21MP (or TD21MG) settings and on a factory constant, V_{MIN}. The TD21 overcurrent supervision is built in and you do not need to configure it to use the TD21 protection element. Use the OC21AG through OC21CA Relay Word bits (see *Overcurrent Supervision Elements on page 2.22*) to monitor the TD21 built-in overcurrent supervision.

As *Equation 2.8* shows, the overcurrent threshold inherently increases for demanding applications (short lines and longer per-unit reach settings). As a result, the TD21 element is faster and more dependable in applications in strong systems.

The TD21 logic conditions the raw outputs shown in *Figure 2.13* by supervising them with the fault-type identification information (see *Fault-Type Identification Logic on page 2.13*).

The SEL-T400L uses identical logic for the TD21 ground and phase loops. The TD21 logic consolidates the three TD21 ground loop bits into a single bit (TD21G) for convenience (via an OR operation). It consolidates the three TD21 phase loop bits into a single TD21P bit. Use the TD21P and TD21G bits in the SEL-T400L trip logic (the TR setting) to initiate unconditional tripping from the TD21 element.

Table 2.9 TD21 Element Relay Word Bits

Relay Word Bit	Description
TD21AG	TD21 distance AG loop operated
TD21BG	TD21 distance BG loop operated
TD21CG	TD21 distance CG loop operated
TD21G	TD21 ground distance operated
TD21AB	TD21 distance AB loop operated
TD21BC	TD21 distance BC loop operated
TD21CA	TD21 distance CA loop operated
TD21P	TD21 phase distance operated

Table 2.10 TD21 Element Settings

Name	Description	Range	Default
TD21MP	Phase distance element reach	OFF, 0.10–0.90 pu	0.7
TD21MG	Ground distance element reach	OFF, 0.10–0.90 pu	0.65

Use the following general settings recommendations when selecting the TD21 settings.

TD21MP and TD21MG

Select the phase and ground settings of the TD21 element (TD21MP and TD21MG, respectively) to cover most of the protected line, but leave a sufficient security margin short of the remote bus.

NOTE: For convenience, set the TD21 element in per unit of the line length (not in secondary ohms).

Use a security margin that is a sum of percentage errors from the PTs, CTs, line impedance data, steady-state relay accuracy, and the transient overreach of the TD21 element. The TD21 transient overreach is better than 10 percent of the set reach. The default values shown in *Table 2.10* account for other sources of errors, such as CTs and PTs, and are secure for the large majority of applications. Consider setting TD21MG to less than TD21MP to account for greater errors and greater variability in the zero-sequence line impedance.

In series-compensated line applications, select the TD21 reach settings without accounting for the negative reactance of in-line capacitors or external series compensation.

Refer to *Section 6: Settings Guidelines* for more detailed step-by-step instructions for selecting SEL-T400L protection settings.

Overcurrent Supervision Elements

NOTE: The overcurrent elements respond to the incremental replica loop currents and not to phase currents.

The SEL-T400L applies overcurrent supervision to ensure security for switching events that may generate high-frequency transients and traveling waves. The overcurrent elements respond to the incremental replica loop currents and therefore measure the current level in the low-frequency spectrum, including the power system frequency component. By doing so, they verify that an event, which asserted the SEL-T400L starting logic and resulted in a pickup condition of the TW32 or TD32 elements, or TW87 scheme, contains enough energy around the power frequency band to be considered a fault and warrant a trip from the SEL-T400L. The SEL-T400L includes three six-loop overcurrent elements.

The first overcurrent element (OCTP) supervises the operation of the POTT protection scheme. Permissive trip signals are initiated from the ultra-high-speed and sensitive directional TW32 and TD32 elements. These elements may assert for events other than faults. Upon permissive trip reception, the POTT logic applies the OCTP directional overcurrent supervision before allowing a trip (see *Permissive Overreaching Transfer Trip Logic on page 2.46*).

The second nondirectional overcurrent element (OC87) supervises the operation of the TW87 protection scheme (see *Traveling-Wave Differential Scheme on page 2.31*).

The third directional overcurrent element (OC21) supervises the operation of the TD21 protection element (see *Incremental-Quantity Distance Element on page 2.17*).

The OC21 overcurrent element applies a pickup threshold that the relay derives from the reach and line impedance settings. The OCTP and OC87 overcurrent elements apply user-specified settings. All three overcurrent elements use the same operating principle and logic as follows.

The SEL-T400L overcurrent elements respond to incremental replica loop currents. An incremental replica loop current is zero before the fault (the nature of the incremental current) and contains no decaying dc offset (the nature of the replica current). See *Appendix G: Signal Processing* for more details. When the absolute value of a signal developed from zero and containing no decaying dc offset is integrated over time, the integral is similar to a straight line sloping up at a rate proportional to the current magnitude, as shown in *Figure 2.14*.

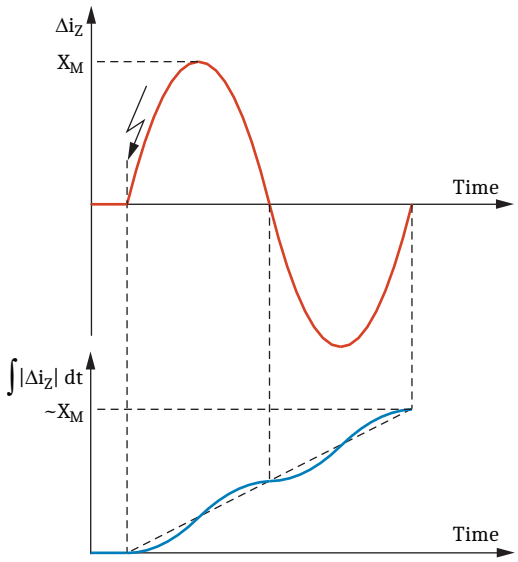

(~ means proportional)

Figure 2.14 Incremental Replica Current and Its Integral Over Time

The SEL-T400L overcurrent element logic integrates the incremental replica current and compares it with a straight line that represents the element pickup threshold, as illustrated in *Figure 2.15*. If the current magnitude exceeds the set pickup threshold, the integral of the current crosses above the straight line representing the pickup. If the current magnitude is lower than the set pickup threshold, the integral of the current stays below the straight line representing the pickup.

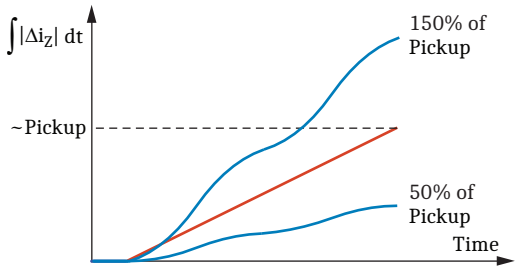

(~ means proportional)

Figure 2.15 Overcurrent Element Principle of Operation

Figure 2.16 shows the simplified logic of the SEL-T400L overcurrent elements. The top integrator integrates the input current. The same logic is used to implement the directional and nondirectional elements based on the position of Switch S. When Switch S is in position 1, the element is a nondirectional overcurrent element. When Switch S is in position 2, the element is a forward-looking directional element. The bottom integrator integrates a constant that is proportional to the element pickup threshold. The integrator output is a straight line sloping up at a rate proportional to the element pickup threshold. The logic adds a small security margin to the output of the pickup line integrator. The element asserts when the integrated current exceeds the straight-line signal representing the set pickup threshold plus margin. The integrators are released when the input current exceeds a noise level and the starting logic asserts the START bit while the arming logic has armed the loop prior to the fault. The RUN control input for the integrators comes from logic that checks whether the ARM input has been

asserted at the rising edge of the FLT input. If so, the logic allows the FLT input to assert the SUP output. If not, the logic ignores the FLT input, the SUP output remains deasserted, and the integrators do not integrate.

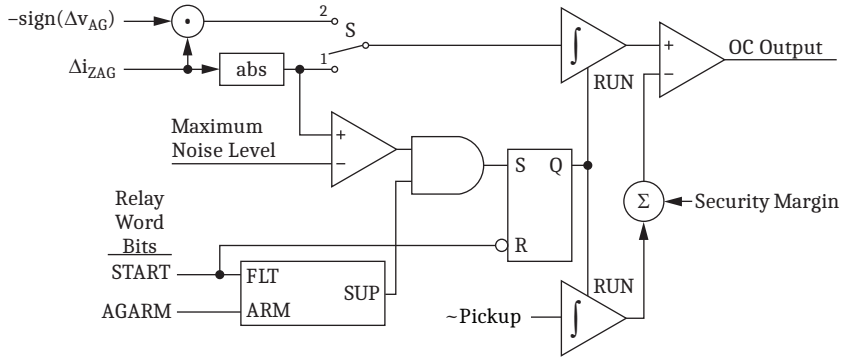

(S = 1—nondirectional operation, S = 2—forward directional operation, ~ means proportional).

Figure 2.16 Overcurrent Element Simplified Logic Diagram (AG Loop Shown)

The OCTP and OC21 overcurrent elements are directional. The OC87 overcurrent element is nondirectional. All three SEL-T400L overcurrent elements are provided on a per-loop basis (see *Table 2.11* for a list of available Relay Word bits).

In applications with in-line series capacitors (XC setting is greater than 0), the OCTP overcurrent element applies a load current-dependent threshold. The OCTP element prevents the POTT scheme from operating during switching off, or on, the in-line capacitors (bypassing or inserting capacitors back into service). The level of the incremental replica loop current when switching capacitors is proportional to the voltage drop across the capacitors, and the voltage drop is proportional to the prefault load current. Because of these relationships, the OCTP settings should either adaptively change with the load current or be set assuming the highest possible line loading. The SEL-T400L uses an adaptive setting that adapts to the load current. Calculate the OCTP settings in this application assuming a nominal phase-to-neutral voltage across the capacitors, and let the OCTP element scale the pickup threshold up or down depending on the line load before the fault (see *Figure 2.17*). This adaptive pickup threshold allows the POTT scheme to remain secure for in-line capacitor switching without sacrificing sensitivity.

As shown in *Figure 2.17*, the overcurrent element logic scales the effective pickup threshold within the limits of 10 percent and 150 percent of the setting. In addition, the effective pickup threshold is not lower than a minimum value, I_{MIN}, proportional to the positive-sequence line charging current. The logic estimates this line charging current in secondary amperes by using line parameters and voltage and frequency settings as follows:

$$I_{MIN} = \frac{1.3 \bullet VNOM}{\sqrt{3} \bullet Z1MAG \bullet \sin(Z1ANG)} \left(2\pi \bullet NFREQ \bullet \frac{LL}{c}\right)^2$$

Equation 2.9

where c is the speed of light in LLUNITs per second (299,792 km/s or 186,282 mi/s).

During testing of the POTT overcurrent supervision element when XC > 0, be aware of the minimum and maximum limits for the effective pickup threshold and remember that the effective threshold depends on the magnitude of the prefault load current.

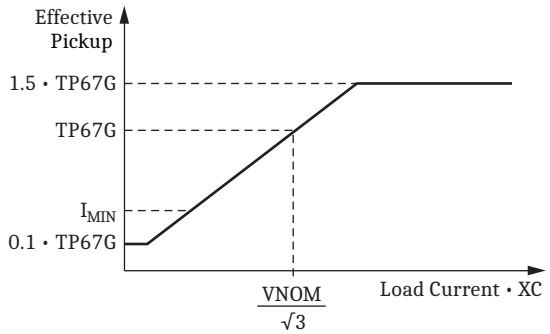

Figure 2.17 Adaptive OCTP Pickup Threshold Depending on the Line Loading

Table 2.11 Overcurrent Supervision Relay Word Bits

Relay Word Bit	Description
OC21AG	Overcurrent supervision asserted for TD21; AG loop
OC21BG	Overcurrent supervision asserted for TD21; BG loop
OC21CG	Overcurrent supervision asserted for TD21; CG loop
OC21AB	Overcurrent supervision asserted for TD21; AB loop
OC21BC	Overcurrent supervision asserted for TD21; BC loop
OC21CA	Overcurrent supervision asserted for TD21; CA loop
OCTPA	Overcurrent supervision asserted for POTT; Phase A
OCTPB	Overcurrent supervision asserted for POTT; Phase B
OCTPC	Overcurrent supervision asserted for POTT; Phase C
OCTPAG	Overcurrent supervision asserted for POTT; AG loop
OCTPBG	Overcurrent supervision asserted for POTT; BG loop
OCTPCG	Overcurrent supervision asserted for POTT; CG loop
OCTPAB	Overcurrent supervision asserted for POTT; AB loop
OCTPBC	Overcurrent supervision asserted for POTT; BC loop
OCTPCA	Overcurrent supervision asserted for POTT; CA loop
OC87AG	Overcurrent supervision asserted for TW87; AG loop
OC87BG	Overcurrent supervision asserted for TW87; BG loop
OC87CG	Overcurrent supervision asserted for TW87; CG loop
OC87AB	Overcurrent supervision asserted for TW87; AB loop
OC87BC	Overcurrent supervision asserted for TW87; BC loop
OC87CA	Overcurrent supervision asserted for TW87; CA loop

Table 2.12 Overcurrent Supervision Settings

Name	Description	Range	Default (5 A)	Default (1 A)
TP67P	POTT phase overcurrent supervision threshold (A, secondary)	5 A: 0.1–10 1 A: 0.02–2	0.3	0.06
TP67G	POTT ground overcurrent supervision threshold (A, secondary)	5 A: 0.1–10 1 A: 0.02–2	0.3	0.06
TP50P	TW87 phase overcurrent supervision threshold (A, secondary)	5 A: 0.1–10 1 A: 0.02–2	0.3	0.06
TP50G	TW87 ground overcurrent supervision threshold (A, secondary)	5 A: 0.1–10 1 A: 0.02–2	0.3	0.06

Use the following general settings recommendations when selecting the overcurrent supervision settings.

TP67P and TP67G

In applications to lines without in-line series compensation, set the overcurrent supervision for the required sensitivity. In applications to lines with in-line series compensation, set the overcurrent supervision for security during capacitor-switching events.

The TP67P and TP67G settings apply to the incremental replica loop currents and are in secondary amperes. The secondary current base is defined by the effective CT ratio. In dual-breaker applications (LINEI = COMB), the effective CT ratio is the greater of the CTRW and CTRX ratio settings.

Application to Noncompensated Lines

Use your short-circuit program to calculate the minimum fault current levels under the worst-case scenario according to your protection philosophy and guidelines. This typically assumes a fault at the end of the line (at the remote bus), the weakest local system, the strongest remote system, and a certain amount of fault resistance for single-line-to-ground (SLG) faults. Find the minimum short-circuit current for SLG faults in secondary amperes. Obtain the short-circuit current as an incremental quantity with respect to prefault load. Use equations from *Section 6: Settings Guidelines* to calculate the TP67G setting from your short-circuit currents. Find the minimum short-circuit current for line-to-line and three-phase faults in secondary amperes. Obtain the short-circuit current as an incremental quantity with respect to prefault load. Use equations from *Section 6: Settings Guidelines* to calculate the TP67P setting from your short-circuit currents.

Application to series-compensated lines

In applications with in-line series compensation (XC setting is greater than 0), use the total system and line impedances to calculate the incremental replica loop current resulting from capacitor switching and set the TP67G and TP67P settings greater than the capacitor-switching current, as explained in *Section 6: Settings Guidelines*.

TP50P and TP50G

In applications to lines with and without in-line series compensation, follow the same settings rules as for the TP67G and TP67G settings for lines without in-line series compensation.

Refer to *Section 6: Settings Guidelines* for more detailed step-by-step instructions on selecting SEL-T400L protection settings.

Traveling-Wave Directional Element

The SEL-T400L incorporates a TW directional (TW32) element. The TW32 element asserts in a few hundreds of microseconds. Use it in a POTT scheme to accelerate permissive trip keying (see *Permissive Overreaching Transfer Trip Logic on page 2.46*).

The TW32 element responds to the first TW in the line currents and voltages. The element is very fast and sensitive but is not 100 percent dependable because faults occurring when the voltage nears zero do not generate TWs of sufficient magnitudes. Therefore, SEL recommends using both the TW32 and TD32 directional elements for fast (due to the TW32 element) and dependable (due to the TD32 element) indication of fault direction. To use the TW32 element, include it in the POTT logic by setting ETW32 = Y (you can access the ETW32 setting if you set EADVS = Y). The TD32 element is always included in the POTT scheme and thus does not need to be enabled. When used together, the TD32 and TW32 elements key permission using separate bits for security.

The TW32 logic does not use any dedicated settings, and therefore you do not need to configure it after you have configured the basic SEL-T400L protection settings (see *Section 6: Settings Guidelines*). However, SEL recommends reviewing TW32 signal processing and logic to avoid confusion when testing the relay (see *Section 11: Testing and Commissioning*).

TW32 Theory of Operation

Figure 2.18 illustrates the TW32 operating principle. A fault on the line (a forward fault) launches current and voltage TWs that travel toward the relay from the direction of the line. Because the protection CTs measure the current toward the line, for each TW that arrives from the forward direction (TW1 in *Figure 2.18(a)*), the voltage and current TWs measured by the relay are of opposite polarities. A reverse fault launches current and voltage TWs that arrive at the relay from the bus behind the relay and continue toward the line. Therefore, for each TW that arrives from the reverse direction (TW3 in *Figure 2.18(b)*), the voltage and current TWs measured by the relay are of matching polarities.

The polarities of the first voltage and current TWs indicate fault direction. Voltage and current TWs associated with TW1 in *Figure 2.18(a)* are of opposite polarities, so the fault direction is forward. Voltage and current TWs associated with TW3 in *Figure 2.18(b)* are of matching polarities, so the fault direction is reverse. TWs that follow the first TW can arrive from either the forward or reverse direction regardless of the fault direction. For example, TW2 in *Figure 2.18(a)* arrives from the reverse direction, and this TW is a reflection from a discontinuity behind the relay terminal. TW4 in *Figure 2.18(b)* arrives from the forward direction, and this TW is a reflection from discontinuities in front of the relay such as the remote bus or a line tap.

The TW32 element responds to TW activity within the first few tens of microseconds (e.g., about 50 µs) to make the TW32 output respond to the first TW and not successive reflections that may come from a direction opposite of the fault direction. Any reflections arriving within this short time window typically have magnitudes lower than the first TW, and they do not inadvertently result in the TW32 element detecting an incorrect fault direction.

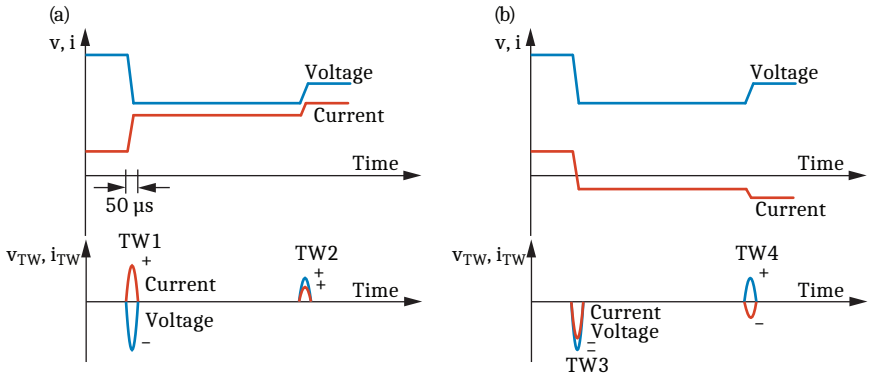

Figure 2.18 TW32 Operating Principle: (a) Forward Fault, and (b) Reverse Fault

TW32 Implementation

Figure 2.19 shows a simplified diagram of the TW32 element. The element works with the current and voltage TW signals (see *Appendix G: Signal Processing*). The TW32 logic is divided into the following operations.

TW Processing. The TW32 logic calculates TWs using a dedicated differentiator-smoother filter with a window of about 100 µs. This window is longer than the differentiator-smoother window for other SEL-T400L functions (20 µs). The extended window reduces the impact of ringing in the secondary signals and lessens the impact of potentially different frequency responses of voltage transformers compared with current transformers. In order to maintain sensitivity, the logic uses an additional high-pass filter to prevent the fundamental frequency signal from leaking into the output of the long-window differentiator-smoother. Further, to increase resilience to noise, the logic removes the ground mode from its TW operating signals. As a result, the logic responds to the alpha mode in the current and voltage TWs.

Operating and Restraining Energies. The logic calculates a TW torque signal as a product of sign-inverted voltage TW and current TW. This torque is positive for forward events and negative for reverse events. The logic integrates the torque for approximately half the length of the differentiator-smoother window, and by doing so, it obtains an operating TW energy. The logic performs these calculations on a per-phase basis and derives three operating energies: ENA, ENB, and ENC. The event operating energy (ENOP) is the sum of all three values: ENA, ENB, and ENC. The ENOP signal is positive for forward TWs and negative for reverse TWs. The logic also integrates the product of absolute values of the voltage TW and current TW and obtains the total three-phase restraining energy (ENRT). The ENRT signal serves as an adaptive threshold (a percentage restraint) for evaluating the ENOP signal.

Integrator Control Logic. The TW32 logic operates for about half the differentiator-smoother window, and it locks out to avoid responding to reflections and TWs not related to the fault inception. The integration starts only if the TW32 current TW in any phase exceeds a starting threshold, and the relay TW current and voltage disturbance detectors (TWIDD and TWVDD) assert at approximately the same time. The logic derives the starting threshold from the relay settings and coordinates the starting threshold in one relay with the operating threshold in the other relay. Once the integration starts, it continues uninterrupted for about half the length of the differentiator-smoother window. When the integration is finished, the logic captures all integrated data and proceeds to a one-time calculation step of processing the data and asserting the corresponding TW32 outputs.

Voltage and Current TW Levels. At the end of the integration window, the logic captures the voltage TW and current TW levels from the output of the long-window differentiator-smoother. The logic checks these levels for minimum values before allowing the TW32 outputs to assert. For a given phase to be allowed to assert a TW32 output, both the current TW and voltage TW in that phase must be above their minimum levels. The logic applies a voltage threshold selected based on the ability of the SEL-T400L to measure small voltage signals. The logic applies a current operating threshold that coordinates with the starting threshold in the relay at the opposite end of the line. The starting and operating threshold coordination ensures that if a TW that arrives from outside of the protected line satisfies the operating threshold for the forward assertion in one relay, it also activates the starting threshold in the other relay that measures the TW in the reverse direction. The logic coordinates the thresholds, taking into account the line voltage level, CT ratios, and other relevant factors you provided as relay settings.

Restraining Energy Logic. The logic checks the operating energy ENOP with respect to the restraining energy, ENRT. If ENOP > k_{FWD} • ENRT, the logic declares a forward condition, and if ENOP < $-k_{REV}$ • ENRT, the logic declares a reverse condition (e.g., $k_{FWD} = 0.75$ and $k_{REV} = 0.5$).

Minimum Operating Energy Logic. This logic determines if the maximum positive energy in the three phases is higher than the maximum negative energy in the three phases and if the operating energy is above the energy supervision threshold.

Phase Consistency Logic. As they travel, TWs couple in all three line conductors. Therefore, all three alpha modes will normally reveal the same TW directionality. The phase consistency logic determines if any of the three integrators integrated an operating energy that is significant in magnitude but contradicting in polarity with respect to the other two integrators. If any phase contradicts the direction of the other two phases, the TW32 logic does not operate.

Prefault Voltage Polarity Logic. On a per-phase basis, the logic checks the polarity of current TWs with respect to the polarity of the prefault voltages. If the polarities disagree for the phase in which the TW32 element is about to assert, it does not operate. This check may reduce TW32 dependability in some cases, but it enhances TW32 security. The logic also compares the polarities of voltage TWs and current TWs as a second check in addition to the integrated operating energies. To test the TW32 logic without applying prefault voltages, put the SEL-T400L in TW test mode.

Conditioning Logic. The conditioning logic consolidates outputs of the conditions listed above and asserts the TW32 outputs: TW32FA, TW32FB, TW32FC, and TW32R. The four output bits are mutually exclusive. For forward faults, the logic also asserts the TW32F Relay Word bit and it selects the phase (A, B, or C) that has the highest operating energy. The conditioning logic maintains the TW32 outputs for 8 ms. Make sure these short pulses are not erased by the debounce security timers associated with your POTT channel. The conditioning logic also requires the arming logic to be asserted in all loops prior to the fault. Use the TW test mode to test the TW32 logic without applying prefault voltages and currents. Also, the conditioning logic inhibits TW32 outputs if the relay detects excessive standing EMI noise in the local signals or invalid local voltage or current data.

Application Supervision Logic. The TW32 logic is operational when both of the following conditions are true:

- The TWLPT setting is longer than half the length of the long-window differentiator-smoother window (e.g., about 50 µs).
- The current TW operating threshold that is established based on the voltage level, CT ratio, and other settings is above the accurate measurement level of the relay.

The relay uses a TW32 forward operating threshold of about 20 percent of the maximum current TW value for a given voltage level and line type (overhead or cable) and verifies if that threshold is above about 1 percent of CT nominal current.

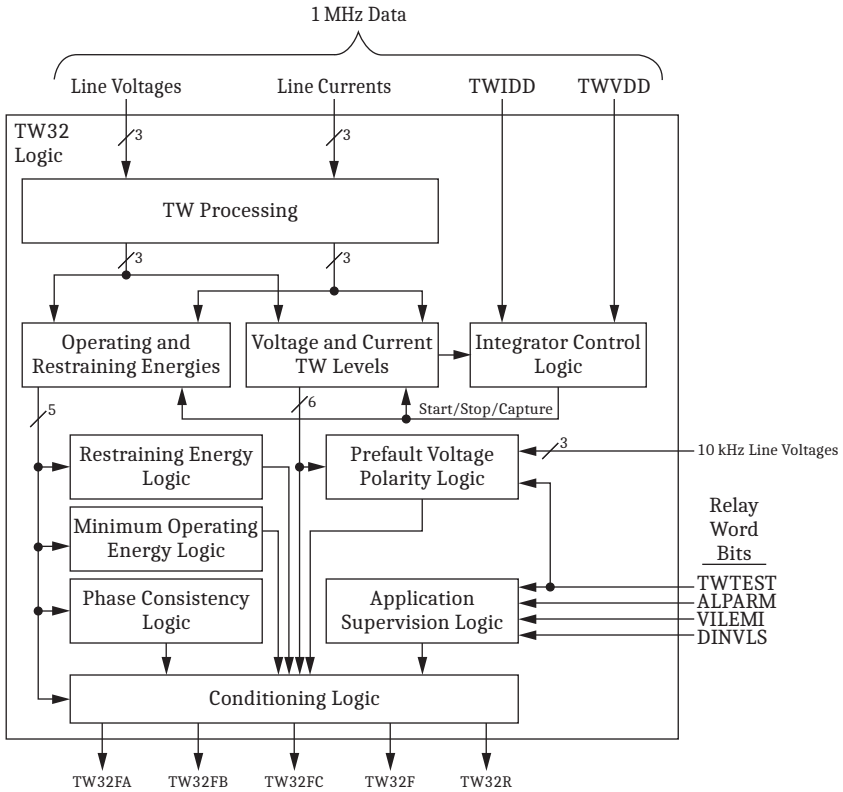

Figure 2.19 Simplified TW32 Logic Diagram

Table 2.13 lists the TW32 element Relay Word bits. Note that the TW32 element always asserts only a single-phase output. The TW32 logic is designed to initiate a correct single-pole POTT operation for single-phase faults in single-pole tripping applications and to initiate a three-pole POTT operation for any fault type in three-pole tripping applications. During multiphase faults in single-pole tripping applications, the POTT logic, when initiated by the TW32 element, only trips a single phase. The SEL-T400L depends on the TD32 element to trip the remaining two phases.

Table 2.13 TW32 Element Relay Word Bits (Sheet 1 of 2)

Relay Word Bit	Description
TW32F	TW32 directional element asserted forward
TW32R	TW32 directional element asserted reverse
TW32FA	TW32 directional element asserted forward, A-phase involved

Table 2.13 TW32 Element Relay Word Bits (Sheet 2 of 2)

Relay Word Bit	Description
TW32FB	TW32 directional element asserted forward, B-phase involved
TW32FC	TW32 directional element asserted forward, C-phase involved

Traveling-Wave Differential Scheme

The SEL-T400L incorporates a traveling-wave differential (TW87) scheme. The TW87 scheme provides ultra-high-speed and sensitive line protection. The TW87 scheme works with a point-to-point fiber-optic channel on Port 6 and does not depend on external time sources for time alignment between local and remote current measurements.

The TW87 protection scheme requires only a few settings, and you do not need detailed knowledge of internal TW87 logic to configure it. However, SEL recommends reviewing TW87 signal processing and logic when you develop test plans for the relay (see *Section 11: Testing and Commissioning*).

This subsection includes three parts: theory of operation, implementation and setting, and Relay Word bit description.

TW87 Theory of Operation

Figure 2.20 illustrates the operating principle of the TW87 scheme.

External faults. An external fault in the system shown in *Figure 2.20(a)* launches a current TW that propagates away from the fault and reaches the nearest terminal of the protected line first (local terminal in *Figure 2.20(a)*). The TW continues along the protected line and reaches the opposite line terminal (remote terminal in *Figure 2.20(a)*) after the TW line propagation time (TWLPT). If the first terminal measured the TW with a positive polarity, the other terminal measures the TW with a negative polarity. The true polarity of the current TW has not changed. However, the two line CTs are connected to measure their currents toward the line, so the first TWs the two relays measure at the two line terminals will always be of opposite polarities for an external fault.

A TW restraining signal provides a first layer of security for the TW87 scheme. The TW87 logic calculates two restraining terms as follows:

$$i_{RTL(t)} = \left|i_{TWL(t-TWLPT)} - i_{TWR(t)}\right|$$
$$i_{RTR(t)} = \left|i_{TWR(t-TWLPT)} - i_{TWL(t)}\right|$$

Equation 2.10

The first restraining term ($i_{RTL(t)}$) applies to a scenario during an external fault where the TW enters the protected line at the local terminal and leaves at the remote terminal. The second restraining term ($i_{RTR(t)}$) applies to a scenario during an external fault where the TW enters at the remote terminal and leaves at the local terminal. The TW87 logic accounts for both scenarios and calculates the restraining signal as the greater of the two terms:

$$i_{RT} = \max(i_{RTL}, i_{RTR})$$

Equation 2.11

The TW fault location calculation provides a second layer of security for the TW87 scheme. The logic calculates the fault location based on the relative difference in the arrival times of the first TWs at the local and remote line terminals (see *Double-Ended Traveling-Wave-Based Method on page 4.6* for details about the algorithm). The fault-locating calculations in the TW87 scheme are independent from the precise fault-locating calculations of the SEL-T400L fault locator. For external faults, the calculated fault location appears to be at either the local or remote bus. For internal faults, the calculated fault location indicates the actual location of the fault.

Internal faults. An internal fault in the system in *Figure 2.20(a)* launches a current TW that propagates away from the fault and reaches the local and remote terminals within a time less than TWLPT (see *Figure 2.20(c)*). Consequently, the arrival time difference between the two terminals is less than TWLPT. The first current TWs that reach the two terminals have matching polarities.

The TW87 scheme derives the operating signal from a summation of the first current TWs at the local and remote relays, time-shifted by the difference in TW arrival times (ΔT), as follows:

$$i_{OP(t)} = i_{TWL(t \pm \Delta T)} + i_{TWR(t)}$$

Equation 2.12

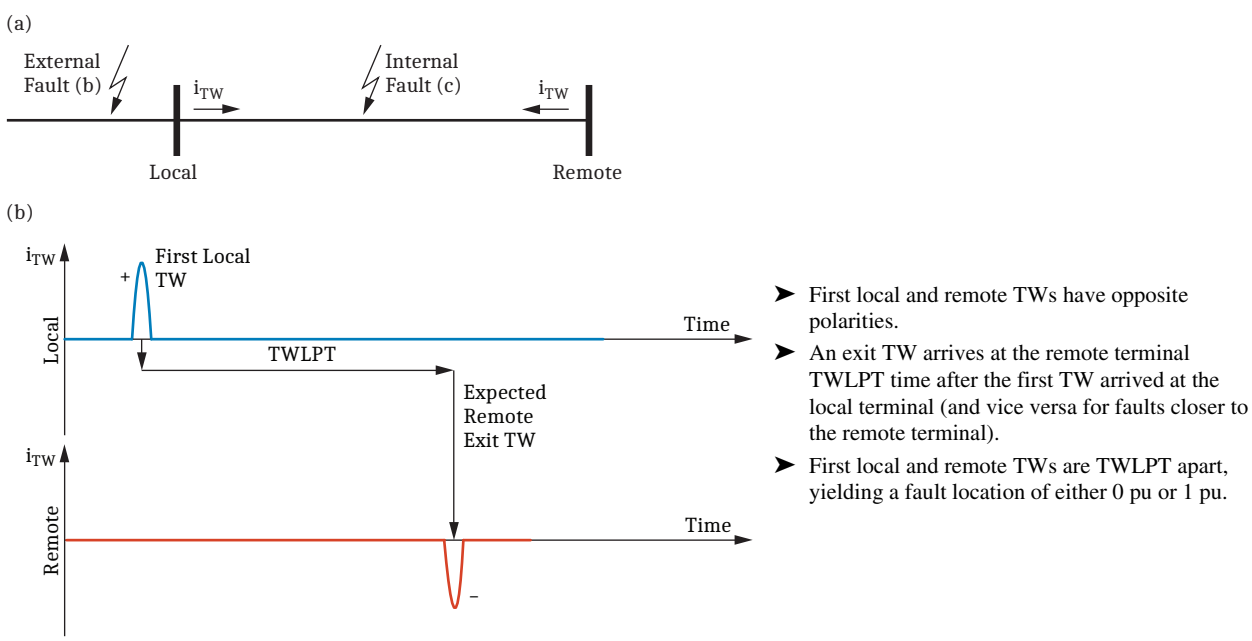

Figure 2.20 TW87 Operating Principle: (a) Fault Locations, (b) TWs for an External Fault, and (c) TWs for an Internal Fault

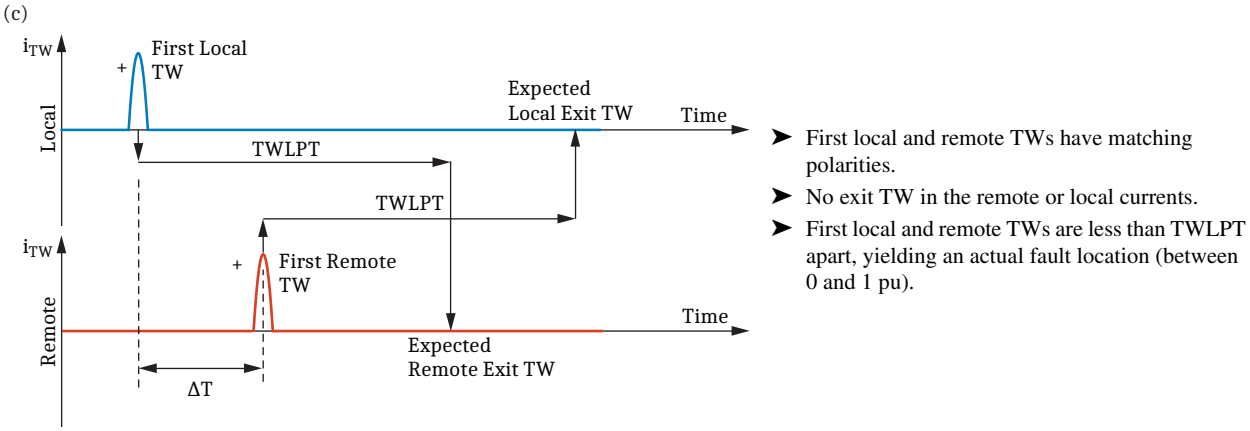

Figure 2.20 TW87 Operating Principle: (a) Fault Locations, (b) TWs for an External Fault, and (c) TWs for an Internal Fault (Continued)

For external faults (*Figure 2.20(b)*), the operating signal is small because the first TWs at both line terminals have opposite polarities and effectively subtract during calculation of the sum. As a result, the operating signal is less than the greater of the two TWs shown in *Figure 2.20(b)*. Simultaneously, the restraining signal exceeds the greater of the two TWs (the two TWs effectively add during calculation of the difference). Therefore, the operating signal is less than the restraining signal for external faults.

For internal faults (*Figure 2.20(c)*), the operating signal is large because the first TWs at both line terminals have matching polarities and effectively add during calculation of the sum. As a result, the operating signal exceeds the greater of the two TWs. Simultaneously, the restraining signal is small because the exit TWs are small; no significant TW activity occurs after the TWLPT interval. As a result, the operating signal exceeds the restraining signal for internal faults.

The TW87 scheme applies a third security layer for external faults on a parallel line. The scheme verifies whether the TW operating signal polarity is consistent with the prefault voltage polarity at the fault location. If an internal fault occurs at the voltage point on wave when the prefault voltage polarity is positive, the voltage at the fault point decreases because of the fault, launching a current TW with a negative polarity. This negative current TW propagates from the fault toward the two line terminals. Because the line CTs are connected to measure the currents toward the line and away from the terminals, the relay measures the current TW with a positive polarity. As a result, for an internal fault on the protected line, you can expect a positive TW operating signal when the prefault voltage at the fault location is positive. You can expect a negative TW operating signal when the prefault voltage at the fault location is negative. This polarity pattern reverses for faults on a parallel line.

Figure 2.21 illustrates how the TW87 scheme calculates prefault voltage at the fault location. The instantaneous voltage profile along the line is approximately a straight line between the two instantaneous voltages at both terminals of the line. For some fault locations, the prefault voltage at the fault point may be positive (close to the local terminal in *Figure 2.21*), and for some other fault locations it may be negative (close to the remote terminal in *Figure 2.21*). The scheme uses the arrival times of the first current TWs to calculate the fault location, TW87 FL. The scheme then uses the fault location to calculate the voltage at the fault point (as a straight-line interpolation between the instantaneous local and remote voltages taken just before the fault). The TW87 uses the prefault voltage at the fault location and at the time of the fault as a polarizing voltage, VPOL.

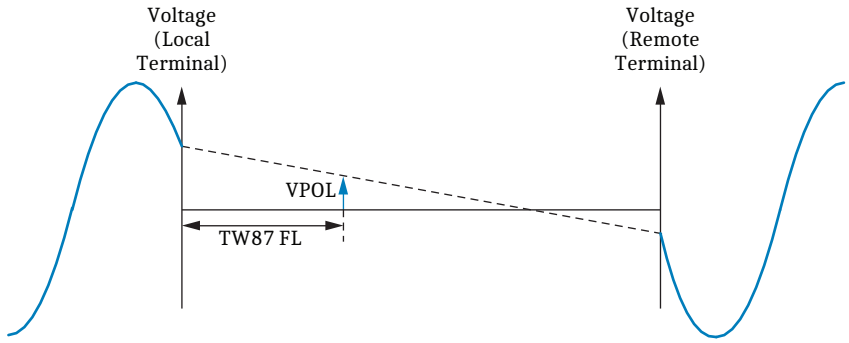

Figure 2.21 TW87 Voltage Polarization Principle

Refer to the following list of terms and to *Appendix G: Signal Processing* to obtain a better understanding of the TW87 scheme:

Local Relay (or Local Line Terminal). The relay in the TW87 scheme that measures the local currents and voltages, receives the remote currents and voltages, and runs the TW87 calculations and logic.

Remote Relay (or Remote Line Terminal). The relay in the TW87 scheme that measures the remote currents and voltages and sends them to the local relay. The two relays in the TW87 scheme are local and remote relays to each other. This document distinguishes between the local and remote relay only to unambiguously describe the TW87 scheme.

First Current TW. The first current TW that arrives at a given line terminal for an event. The first TW is a TW that causes assertion of the TW disturbance detector.

Exit Current TW. A traveling wave in the current, at the terminal opposite the terminal with the first TW, that arrives exactly after the TW line propagation time, TWLPT, from the first TW. The magnitude of an exit TW can be low or even zero for internal faults.

TW Magnitude. A peak value of the output from a differentiator-smoother filter used for extracting TWs. TW magnitude can be positive or negative, because it reflects an instantaneous TW value.

TW Filtered Magnitude. A short-window average of the output from the differentiator-smoother. TW filtered magnitude can be positive or negative, because it reflects an instantaneous TW value with extra low-pass filtering.

TW Arrival Time. The time corresponding to the TW magnitude (the time of the peak of the differentiator-smoother output).

Local TW Current Magnitude (IL). The filtered magnitude of the first current TW at the local terminal.

Remote TW Current Magnitude (IR). The filtered magnitude of the first current TW at the remote terminal.

Operating Signal (IOP). The sum of local and remote filtered TW magnitudes. The operating signal can be positive or negative, and the sign depends on the prefault voltage polarity at the point of fault.

Restraining Signal (IRT). The greater of the difference between the magnitudes of the two filtered magnitude TWs: the magnitude of first local TW minus the magnitude of the exit remote TW, and the magnitude of the first remote TW minus the magnitude of the local exit TW. The restraining signal uses the absolute values of the differences and is therefore always positive.

TW87 Fault Location (TW87 FL). A fault location derived through use of a double-ended fault-locating algorithm from the TW arrival times of the first local and first remote TWs.

Polarizing Voltage (VPOL). An instantaneous prefault voltage at the point of fault derived from the instantaneous prefault voltages at both the line terminals and the fault location (TW87 FL). The polarizing voltage is an instantaneous value and can therefore be positive or negative.

TW87 Operating Mode (TW87 MODE). One of six aerial modes (alpha A, B, and C; beta AB, BC, and CA) that yields the greatest operating signal. The TW87 scheme calculates the operating signal for all six modes and then uses the mode with the greatest operating signal.

TW87 Implementation

The SEL-T400L implements the TW87 scheme in three processes, as shown in *Figure 2.22*.

The first process runs every microsecond and collects data derived from the local and remote current TWs as well as the local and remote prefault voltages. After collecting exit current TWs, this process passes collected data to the next process.

The second process is a one-time calculation that implements TW87 logic according to static data received from the first process.

The third process, which runs every 0.1 ms (as part of the main protection scan), supervises the TW87 operation with an overcurrent condition and, in some circumstances, the TD32 directional element.

The SEL-T400L provides a TW test mode to enable testing of the TW87 protection scheme with current TW signals only. Use the **TWTEST** command to start the TW test mode and **TWTEST C** or **TWTEST X** to terminate the TW test mode. When the relay is in the TW test mode, the TWTEST Relay Word bit asserts. The TW87 scheme logic uses the TWTEST bit (see *Figure 2.22*) to override a number of logic conditions related to voltages and low-frequency current components, so the scheme responds to TWs only when in the TW test mode. The TW test mode eliminates the need to inject voltages or low-frequency current components, greatly simplifying testing of the TW87 scheme. Refer to *TWTEST on page C.19* for more information and pay attention to the TWTEST Relay Word bit in the TW87 logic description that follows.

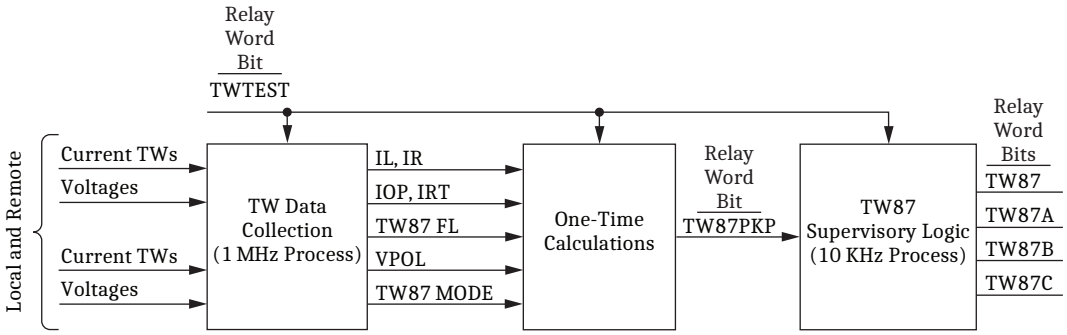

Figure 2.22 Three Implementation Stages of the TW87 Scheme

TW Data Collection

Figure 2.23 shows a simplified state machine for the process of collecting the TW and prefault local and remote instantaneous voltage data for the TW87 scheme.

The state machine is in the TW87 ARMED state if the SEL-T400L arming logic is asserted, the TW87 fiber-optic channel is healthy, and the two relay clocks are synchronized. If the arming logic deasserts or the channel fails, the state machine transitions to a fail-safe state and waits to rearm again. When the TWTEST mode is in progress, the TW87 state machine ignores the SEL-T400L arming logic. The TW87 logic arms only if the channel is healthy and synchronized.

When in the TW87 ARMED state, the algorithm waits for a TW disturbance. A local or remote TW disturbance triggers the state machine to capture the first local and remote current TWs as well as the prefault local and remote instantaneous voltages.

Subsequently, the algorithm calculates the operating signal in three alpha and three beta aerial modes and selects the mode with the greatest operating signal (IOP is the operating signal in the strongest mode, and TW87 MODE indicates which mode has been selected).

The algorithm then calculates the fault location (TW87 FL) and the polarizing voltage at the fault location (VPOL).

At TWLPT after the first local and remote TWs, the algorithm captures the exit remote and local TWs, respectively, and calculates the restraining signal (IRT).

At this point, the state machine passes data (IL, IR, IOP, TW87 FL, TW87 MODE, VPOL, IRT) to a one-time calculation process and proceeds to a time-out state. It remains in the time-out state for a few tens of milliseconds (e.g., 100 ms). It then waits for the arming logic to assert again and transitions into the TW87 ARMED state, from which it is ready to analyze the next event.

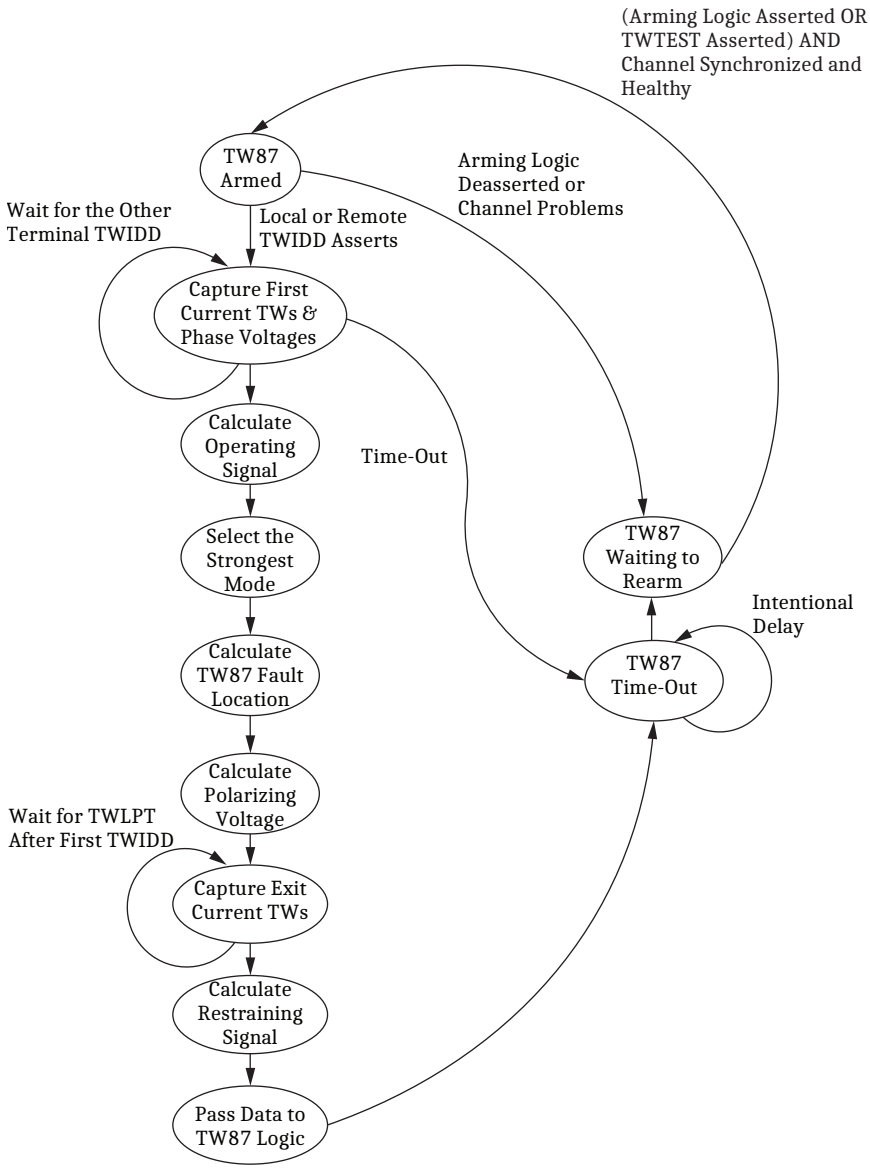

Figure 2.23 TW87 Data Collection Process (1 μs Processing)

One-Time Calculations

The signals resulting from the TW data collection process do not vary over time but are static values characterizing the initial stage of the event. The TW87 logic processes these values in a one-time calculation process as soon as the data are available.

These one-time calculations include TW level supervision logic, fault location logic, and restraining logic.

Figure 2.24 illustrates the minimum TW current level supervision logic. This logic asserts if the operating signal (IOP) exceeds a factory-set threshold. In addition, the logic requires that each terminal measure TW currents (IL and IR) that exceed a minimum level. The logic uses a fraction (k) of the threshold for the operating signal (e.g., 0.2) to check the TW level of each terminal current TW.

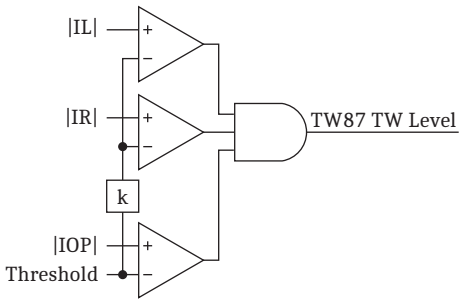

Figure 2.24 TW87 Traveling-Wave Current Level Supervision Logic

Figure 2.25 illustrates the TW87 fault location logic. This logic asserts if the fault is located on the protected line (per-unit location between 0 and 1), but not within one of the two blocking regions of the TW87 scheme. To coordinate the TW87 scheme with series capacitor protection or protection on circuits tapped from the protected line, specify as many as two blocking regions to block the TW87 scheme for faults near series capacitors or unmeasured line taps.

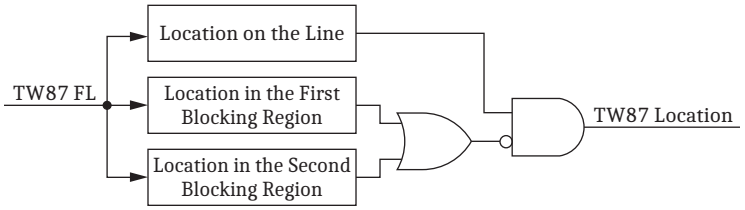

Figure 2.25 TW87 Fault Location Logic

Figure 2.26 illustrates the restraining logic. This logic uses a factory-set SLOPE to compare the operating signal (IOP) with the restraining signal (IRT). The logic also compares polarities of the operating signal (IOP) and the polarizing voltage (VPOL). The logic asserts if the operating current and voltage polarities are the same. The logic requires the polarizing voltage to exceed a minimum factory-set threshold. Otherwise, VPOL is an unreliable polarizing signal, and the TW87 scheme is blocked. Faults occurring near zero voltage yield small current TWs and a small polarizing voltage. The TW87 scheme does not operate for such faults. This logic also requires that the local and remote aerial mode current TWs are 1.5 times greater than their corresponding ground mode current TW.

The TW87 scheme calculates the polarizing voltage accurately in applications without series compensation and without external series compensation. Therefore, the logic in *Figure 2.26* uses voltage polarization only when XC = 0 and EXTSC = N (Switch S is in position 1). In series-compensation applications (Switch S in position 2), the TW87 scheme uses the TD32 directional elements for security, as shown in *Figure 2.27*.

When the TWTEST Relay Word bit is asserted, the TW87 restraining logic shown in *Figure 2.26* ignores the voltage polarity check and responds only to TW operating and TW restraining currents. Therefore, you do not need to inject voltage signals when testing the TW87 scheme in TWTEST mode.

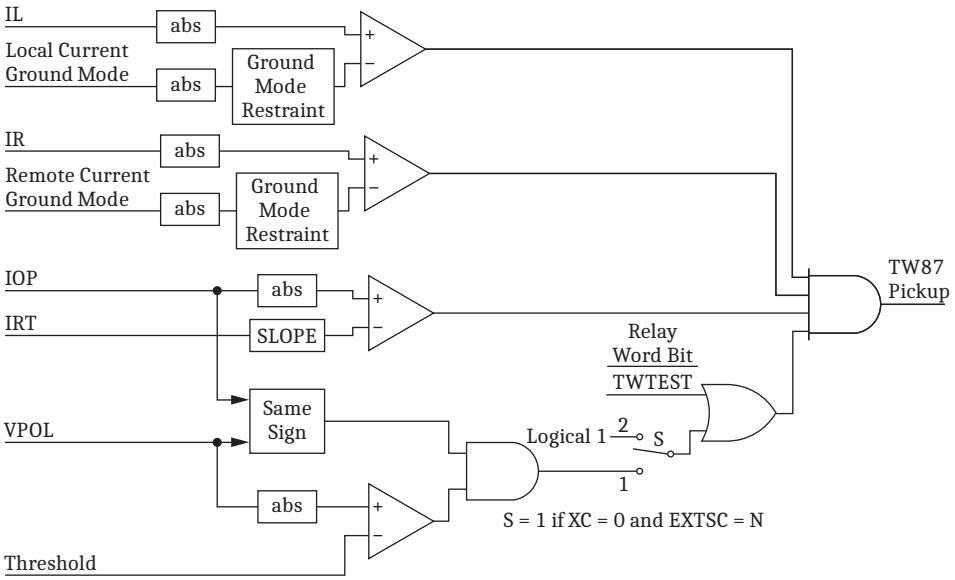

Figure 2.26 TW87 Restraining Logic

TW87 Supervisory Logic

The TW87 scheme operates if the TW87 TW Level (*Figure 2.24*), the TW87 Location (*Figure 2.25*), and the TW87 Pickup (*Figure 2.26*) assert, as shown in *Figure 2.27*. The logic of *Figure 2.27* opens a quarter-cycle time window to allow the overcurrent element to validate the TW87 assertion.

The overcurrent logic checks the incremental replica current level in the loop that corresponds to the TW87 mode the TW87 logic selected (TW87 MODE). See *Overcurrent Supervision Elements on page 2.22* for more details on OC87 logic. Overcurrent supervision is necessary because of the extremely high sensitivity of the TW87 scheme. The TW87 scheme reliably identifies an event as internal or external to the protected line, but it is so sensitive that it may assert for events other than faults (e.g., lightning strikes). Overcurrent supervision verifies that an in-zone event has enough energy in the power frequency spectrum to be considered a fault and warrant a trip from the TW87 scheme.

In series-compensated applications (Switch S in position 2 in *Figure 2.27*), the logic uses the local and remote TD32 elements for security. The TD32 elements must assert, indicating a fault in the forward direction, before TW87 can operate.

When the TWTEST Relay Word bit is asserted, the TW87 supervisory logic shown in *Figure 2.27* ignores the overcurrent and directional checks and responds only to the TW87PKP Relay Word bit, which in turn depends only on current TWs. You therefore do not need to inject voltage signals or low-frequency current signals when testing the TW87 scheme in TWTEST mode.

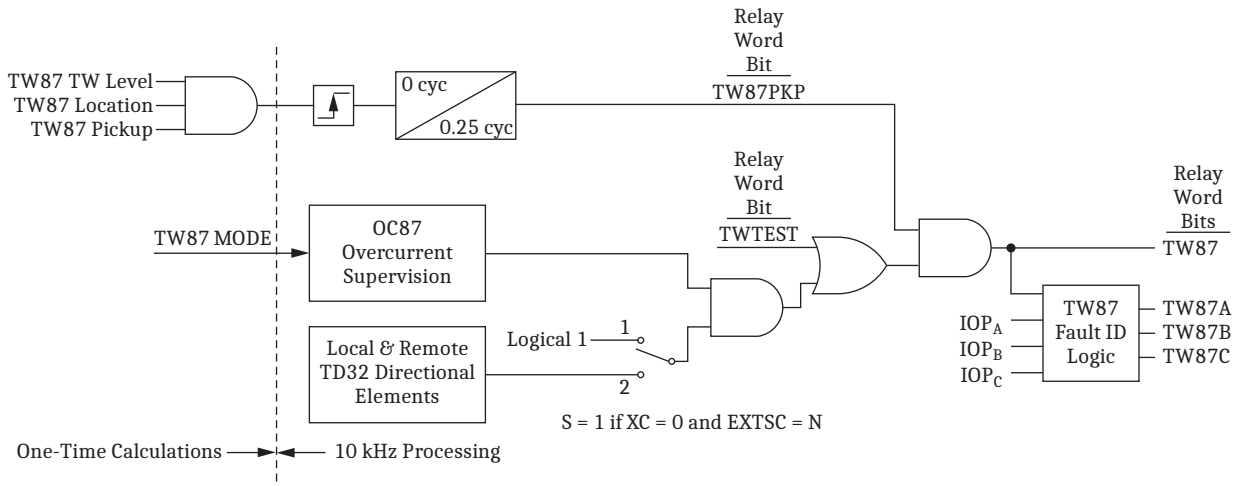

Figure 2.27 TW87 Supervisory Logic

Fault-Type Identification

The TW87 scheme uses fault-type identification logic. This logic is based on whichever aerial mode has the greatest TW87 operating signal magnitude. For example, if alpha A has the greatest TW87 operating signal, the logic identifies the fault type as an AG fault. If beta BC has the greatest TW87 operating signal, the logic identifies the fault type as a BC fault (*Figure 2.28*).

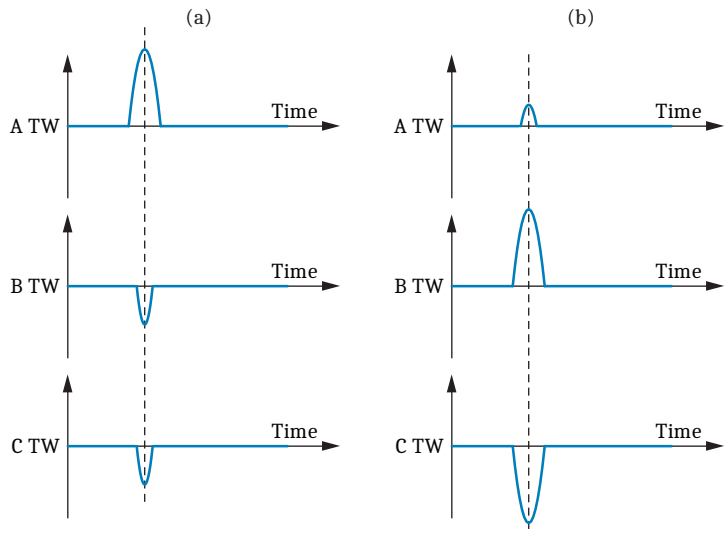

Figure 2.28 TW87 Fault-Type Identification Principle: (a) AG Fault, and (b) BC Fault

Table 2.14 TW87 Scheme Relay Word Bits

Relay Word Bit	Description
TW87PKP	TW87 scheme picked up
TW87	TW87 scheme operated
TW87A	TW87 scheme operated to trip A-phase
TW87B	TW87 scheme operated to trip B-phase
TW87C	TW87 scheme operated to trip C-phase

Table 2.15 TW87 Scheme Settings

Name	Description	Range	Default (5 A)	Default (1 A)
ETW87	Enable TW87 scheme	Y, N	N	N
TP50G	TW87 ground overcurrent supervision threshold (A, secondary)	5 A: 0.1–10 1 A: 0.02–2	0.3	0.06
TP50P	TW87 phase overcurrent supervision threshold (A, secondary)	5 A: 0.1–10 1 A: 0.02–2	0.3	0.06
TW87BL1	Blocking location 1 (line pu)	OFF, 0.00–1.00	OFF	OFF
TW87BR1	Blocking location 1 radius (line pu)	0.01–0.25	0.02	0.02
TW87BL2	Blocking location 2 (line pu)	OFF, 0.00–1.00	OFF	OFF
TW87BR2	Blocking location 2 radius (line pu)	0.01–0.25	0.02	0.02

Follow these general settings recommendations when selecting the TW87 settings.

ETW87

Use this setting to enable the traveling-wave differential protection scheme.

TP50G and TP50P

Refer to *Overcurrent Supervision Elements on page 2.22* for recommendations regarding the TP50G and TP50P overcurrent supervision settings.

TW87BL1 and TW87BR1

In advanced applications, you can establish a blocking region for the TW87 protection scheme in per unit of the line length measured from the local terminal. To configure this feature, ensure that setting EADVS = Y. TW87BL1 determines the location of the first blocking region and TW87BR1 determines the radius of the first blocking region, so that the TW87 scheme does not operate for faults between (TW87BL1 – TW87BR1) and (TW87BL1 + TW87BR1); see *Figure 2.29*.

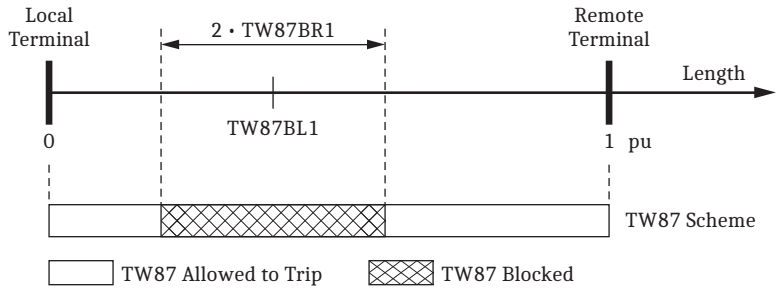

Figure 2.29 Illustration of the TW87 Blocking Location and Radius Settings

Typical applications include coordinating the TW87 protection scheme with protection schemes of in-line capacitor banks and with protection schemes downstream from unmeasured line taps. In these applications, set TW87BL1 to the per-unit location (from the local terminal) of the in-line capacitor bank or the unmeasured line tap. Typically, a setting for TW87BR1 of about 0.02 per unit is sufficient.

TW87BL2 and TW87BR2

Establish a second blocking region for the TW87 protection scheme with settings TW87BL2 and TW87BR2.

Refer to *Section 6: Settings Guidelines* for more detailed step-by-step instructions for selecting SEL-T400L protection settings.

TW Test Mode

Use the TW test mode to simplify testing of the TW87 scheme by allowing it to operate without security checks that rely on either low-frequency current signals or voltage signals. The TW87 scheme responds only to current TWs when operating in the TW test mode. Test the scheme through use of such TW test sets as the SEL-T4287. When testing the TW87 scheme in the TW test mode, you must still inject current TWs to both relays in the TW87 scheme. When you perform commissioning testing in the field, you must use two TW test sets precisely synchronized to each other (e.g., through use of satellite clocks). During testing, the two SEL-T400L Relays composing the TW87 scheme must be connected through use of a point-to-point fiber-optic channel on Port 6.

Refer to the **TWTEST** command description in *Appendix C: SEL ASCII Commands* for information on how to initiate and terminate the TW test mode. Refer to *Section 11: Testing and Commissioning* for more information on how to test the TW87 scheme through use of the TW test mode.

Loss-of-Potential Logic

The loss-of-potential (LOP) logic monitors the health of the relay voltage input source (including potential transformers, fuses, wiring, and test switches) to prevent unexpected relay operation because of low or unbalanced voltages at the relay input terminals. Incremental-quantity and traveling-wave protection elements are secure when a voltage error develops, as long as the currents are in a quiescent state. However, changes in currents resulting from a subsequent fault or a switching event with a standing LOP condition can jeopardize protection security. The SEL-T400L incorporates LOP logic to secure the protection elements for external faults and switching events during an LOP condition.

During an LOP condition, the arming logic disarms the SEL-T400L time-domain elements (see *Arming Logic on page 2.8*) and illuminates the front-panel `LOP` LED. Inspect the relay voltage source when an LOP condition occurs.

The LOP logic uses no dedicated settings, and therefore you do not need to configure it to apply the SEL-T400L.

The SEL-T400L LOP logic monitors the line incremental voltages and currents (see *Figure 2.30*). A change in voltage in any phase determines the voltage change condition. A change in current in any phase determines the current change condition. If a voltage change condition exists without a current change condition for one-quarter of a power system cycle, Relay Word bit LOP asserts. Low positive-sequence voltage magnitude or high negative-sequence voltage magnitude seals in the LOP bit. The voltage must return to normal (near-nominal positive-sequence voltage, and no negative-sequence voltage unbalance) in order for LOP to deassert.

The LOP Relay Word bit also asserts when the voltage is low for 5 seconds while no open-pole condition exists on the line (i.e., when a load current flows). This part of the LOP logic covers a scenario in which the line has been energized with some blown or removed PT fuses, or when some voltage test switches are left open.

When checking incremental voltages and currents, the SEL-T400L uses thresholds optimized for the expected noise level in the incremental signals during no-fault conditions. Low positive-sequence voltage and negative-sequence unbalance conditions also use factory-set thresholds.

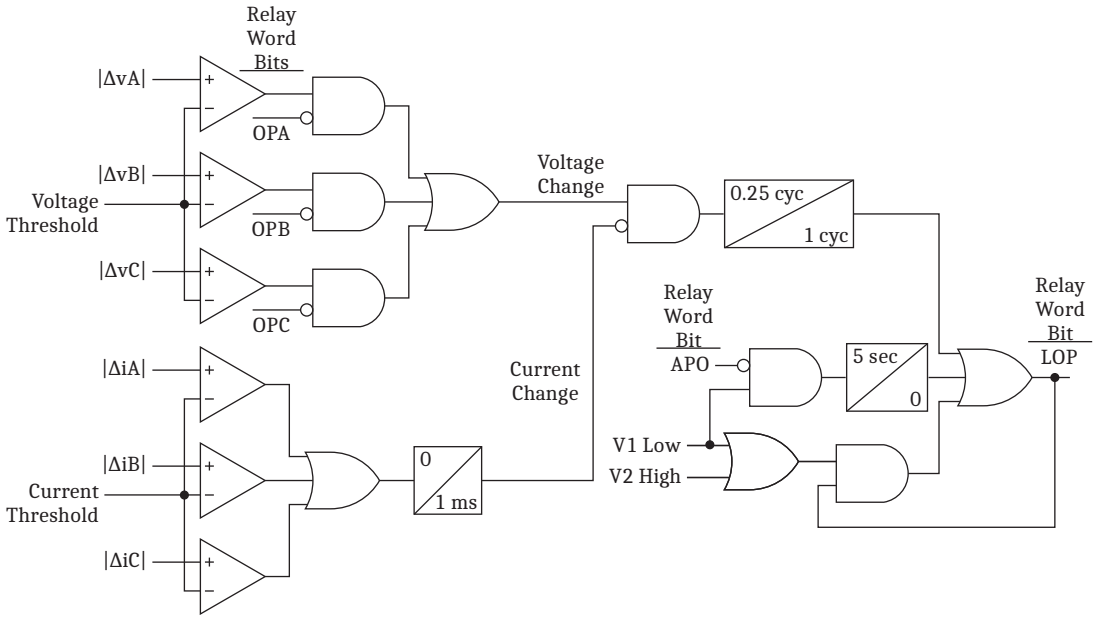

Figure 2.30 LOP Logic Diagram

Table 2.16 LOP Relay Word Bits

Relay Word Bit	Description
LOP	Loss-of-potential condition

Open-Pole Detection Logic

The SEL-T400L incorporates an open-pole detection logic and uses it to distinguish between abnormal voltages because of an open-pole condition and abnormal voltages because of faults or loss-of-potential conditions. The SEL-T400L also uses the open-pole detection to seal in the trip outputs (see *Trip Logic on page 2.45*). This logic uses currents only. You do not need to provide circuit breaker auxiliary contacts to the relay.

Figure 2.31 shows the open-pole detection logic. The current threshold is factory-set and depends on the maximum expected noise level in the current measurements.

The open-pole logic is designed to monitor the total current flowing between the protected line and the local bus (i.e., the current flowing through the breaker or breakers connecting the line to the bus). In the vast majority of applications, this current is the same as the line current. In applications with line-side reactors, you may configure the line current to be a combination of the breaker and the reactor

currents (see *Section 6: Settings Guidelines*); in these applications, use the Open-Pole Current Selection (OPCS) setting to configure the open-pole logic to monitor the breaker current only. This open-pole configuration is especially important in single-pole tripping applications with in-line reactor CTs wired to the SEL-T400L. In such a configuration, when the breaker opens, the line current equals the current that the reactor draws. Because the line current does not go to zero when the breaker opens, it cannot be used to detect an open-pole condition.

Use the OPCS setting to control the current input for the open-pole logic, as shown in *Figure 2.29*. OPCS is an advanced setting and can only be accessed if setting EADVS = Y. The open-pole logic uses the magnitudes of fundamental frequency components of the line, W input, or X input currents as per the OPCS setting.

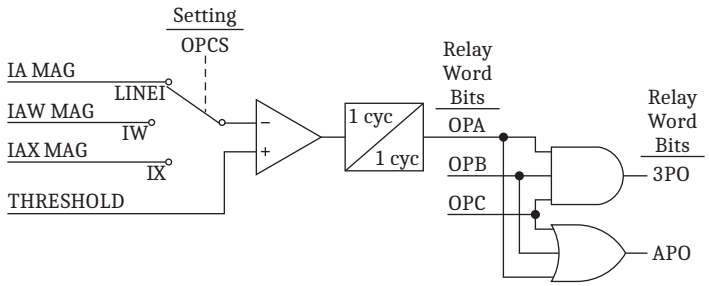

Figure 2.31 Open-Pole Logic Diagram

Table 2.17 Open-Pole Relay Word Bits

Relay Word Bit	Description
OPA	Pole A open
OPB	Pole B open
OPC	Pole C open
3PO	Three-pole open condition
APO	Any pole open

Table 2.18 Open-Pole Settings

Name	Description	Range	Default
OPCS	Open-pole current selection	LINEI, IW, IX	LINEI

OPCS

Use the OPCS setting to control the current input for the open-pole logic. Set OPCS = LINEI to use the line current as per the LINEI source selection setting in the open-pole logic. Set OPCS = IW to use the W input currents in the open-pole logic. This option applies to applications in which the line current is a combination of the breaker and line-side reactor currents (LINEI = COMB) and the breaker current is wired to the W input of the SEL-T400L. Set OPCS = IX to use the X input currents in the open-pole logic. This option applies to applications in which the line current is a combination of the breaker and line-side reactor currents (LINEI = COMB), and the breaker current is wired to the X input of the SEL-T400L. Select EADVS = Y to edit the OPCS setting. The OPCS setting is available in the AC Inputs menu in QuickSet.

Trip Logic

High-Level Overview

The SEL-T400L incorporates a trip logic function to process trip outputs from the protection elements and schemes, send and receive permissive and direct transfer trip signals, and drive trip-rated output contacts. Use the trip logic to accomplish the following aspects of your protection application.

- Select protection elements and schemes to trip the line breaker or breakers and to select a three-pole or a single-pole tripping application.
- Provide permissive overreaching transfer trip (POTT) functionality.
- Provide direct transfer trip (DTT) functionality.
- Execute trip commands by closing and sealing in the trip-rated output contacts.

Figure 2.32 shows a high-level overview of the SEL-T400L trip logic. Use the TR trip setting to select all Relay Word bits from which you want to trip the breaker. You would typically configure the phase and ground distance elements (TD21P and TD21G, respectively), as well as the traveling-wave differential protection scheme (TW87), in the TR setting. The logic initiates a protection trip when the TR setting, POTT scheme, or DTT scheme calls for a trip.

The trip logic includes phase-selection logic to select breaker poles that should be tripped. This phase-selection logic uses the TD21 protection element and the TW87 protection scheme (when they are configured in the TR setting), as well as the phase-segregated DTT and POTT signals received from the remote relay or relays, together with the phase-segregated local TD32 bits. If the phase-selection logic does not select any phases for tripping, but the trip is present, the trip logic executes a three-pole trip. The local phase-segregated trip bits drive the DTT bits to the remote relay or relays.

The trip logic includes seal-in and unlatch logic for the output contacts that is based on time and the line current magnitude (the SEL-T400L trip logic uses no breaker auxiliary contacts (52a/b)). The trip logic directly controls the output contacts. You do not need to configure the SEL-T400L outputs, and they cannot be used for any purpose other than to provide the trip signal. The outputs are rated for directly tripping one or two circuit breakers, but you can also use them for autoreclose and breaker failure initiation and for triggering digital fault recorders.

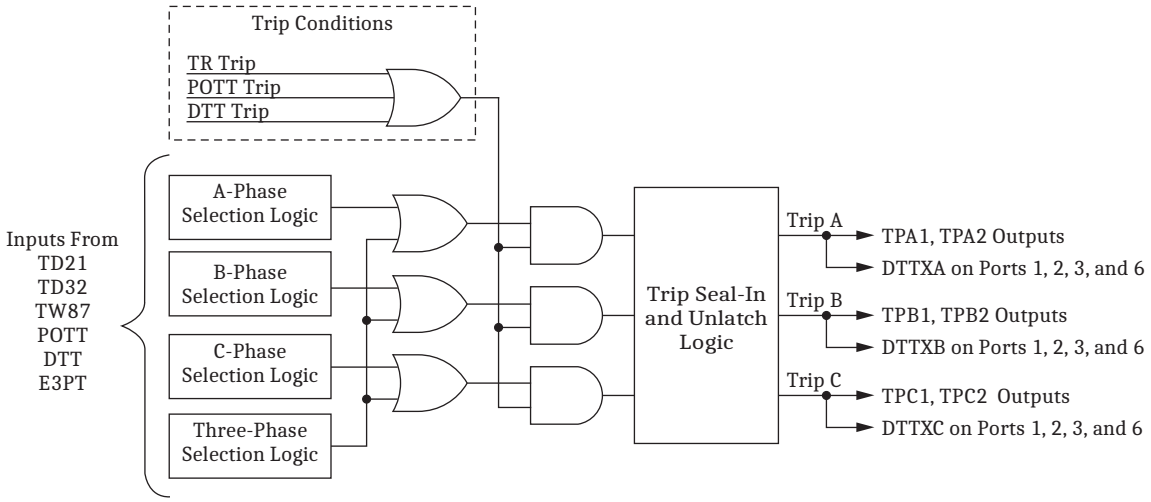

Figure 2.32 Trip Logic High-Level Overview

Permissive Overreaching Transfer Trip Logic

Figure 2.33 explains the operating principle of the SEL-T400L POTT logic. Refer to *POTT Key Transmitter Logic on page 2.49* and *POTT Receiver Logic on page 2.49* for details on the SEL-T400L implementation of the POTT logic.

Relay 1 in the POTT scheme sends a permissive trip (PT) signal when it detects a forward event either through use of the TD32 forward indication or optionally—for submillisecond speed—through use of the TW32 forward indication. For security, the TW32 directional element keys permission using its own dedicated bit, separately from the phase-segregated bits that the TD32 directional element keys. The POTT logic does not key permissive trip signals if the current reversal logic, which is based on the TD32 element reverse indication, has asserted. The TD32 and TW32 elements are internally supervised with minimum levels of instantaneous values (incremental quantities and traveling waves, respectively; see *Incremental-Quantity Directional Element on page 2.13* and *Traveling-Wave Directional Element on page 2.27*). For fast operation, the POTT logic does not supervise the transmitted permissive trip signals with current magnitude. The resulting high sensitivity of the TD32 and TW32 elements causes the permissive trip signals to assert for a wide variety of forward events (not just faults). Keep this in mind when using the SEL-T400L with other relays in a POTT scheme.

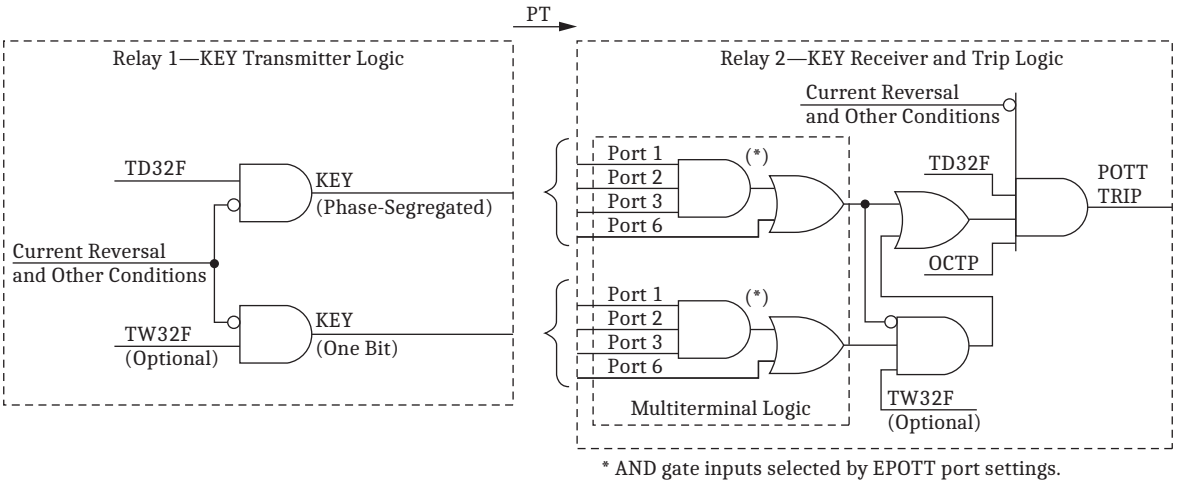

Figure 2.33 POTT Logic High-Level Overview

The POTT logic sends the permissive trip bits on all enabled protection ports. These include Ports 1, 2, and 3, as well as the direct point-to-point fiber-optic Port 6. Permissive trip signals are factory-configured MIRRORED BITS outputs and inputs (see *Table 3.1*). You do not need to configure these MIRRORED BITS, and you cannot use them for any purpose other than permissive tripping. You can, however, communicate with any SEL device capable of MIRRORED BITS communications, including SEL protective relays and remote I/O modules, to send these bits to, and receive them from, the SEL-T400L. The TD32 element drives phase-segregated permissive trip signals using Bits 1, 2, and 3. The TW32 element drives a common permissive trip signal using Bit 8. The POTT logic separates the two permissive trip signals for security on external faults in case the TD32 and TW32 elements detect opposite fault directions under certain system conditions.

Relay 2 in the POTT scheme of *Figure 2.33* accepts the permissive trip bits from all ports for which the POTT function is enabled (set EPOTT = Y on any enabled port to accept permissive trip bits on that port). In applications with more than two terminals, the POTT logic combines all accepted permissive trip bits through a logical AND operation (all line terminals must detect a forward event for the POTT scheme to operate; note that Port 6 is not suitable for POTT applications with more than two terminals). The multiterminal logic in *Figure 2.33* consolidates separately the phase-segregated permissive trips driven by the TD32 element and the permissive trip driven by the TW32 element. The receiving relay (Relay 2) supervises the permissive trip with the TW32F forward indication. If Relay 2 does not receive any of the phase-segregated permissive trips, the logic uses the supervised permissive trip sent by the TW32 element to substitute for the received phase-segregated trips in order to accelerate the POTT operation. The logic further supervises the permissive trip bits with the forward-event indication using the TD32 element, current reversal logic, and an incremental overcurrent element.

The SEL-T400L is made more secure by not using the very sensitive (and therefore far reaching) TW32 element forward indication for tripping at the receiving relay of the POTT scheme. The POTT trip logic always requires the TD32 forward indication, and it uses the TW32 forward indication to supervise the permissive trip sent by the TW32 element. Channel delay between Relays 1 and 2 causes Relay 2 to have more fault data when it receives the permissive trip bit than does Relay 1 when it sends the permissive trip bit. Typically, the TD32 element is already asserted when the permissive trip signal arrives, and the POTT logic trips very fast without relying on the speed advantage of the TW32 element in Relay 2.

The POTT scheme supervises the received permissive trip bit with the fast overcurrent element, OCTP (see *Overcurrent Supervision Elements on page 2.22*), to distinguish between in-zone faults and in-zone switching events, such as bypassing an in-line series capacitor. In addition, the current reversal logic supervises the received permissive trip bits on a per-phase basis. Local supervision from the TD32, TW32, and OCTP elements is intentionally extended to account for communications channel delay.

As soon as the POTT logic receives and validates the permissive trip bits, it passes them to the trip logic to initiate tripping, as shown in *Figure 2.32*.

Direct Transfer Trip Logic

Figure 2.34 explains the operating principle of the SEL-T400L DTT logic. Refer to *DTT Transmitter Logic on page 2.52* and *DTT Receiver Logic on page 2.52* for details on the SEL-T400L implementation of the DTT logic.

Relay 1 in the DTT scheme sends a direct trip (DT) signal upon tripping its local breaker or breakers. The direct trip bits are phase-segregated and encode phases that Relay 1 trips (A, B, C, or three-pole).

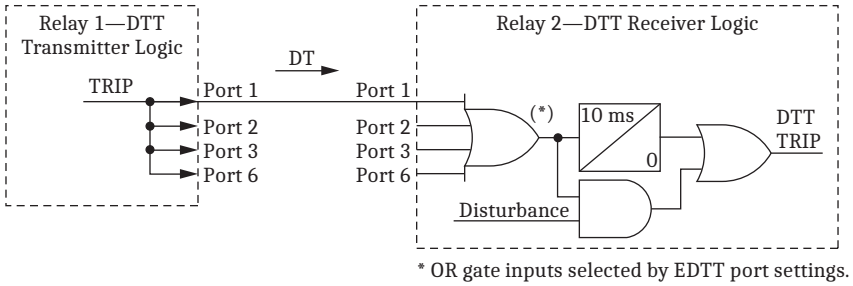

Figure 2.34 DTT Logic High-Level Overview

The DTT logic sends the direct trip bits unconditionally on all enabled protection ports. This includes Ports 1, 2, and 3, as well as the direct point-to-point fiber-optic Port 6. The direct transfer trip signals are factory-configured MIRRORED BITS outputs and inputs (see *Table 3.1*). You do not need to configure these MIRRORED BITS, and you cannot use them for any purpose other than direct tripping. You can, however, use any SEL device capable of MIRRORED BITS communications to send these bits to, and receive them from, the SEL-T400L.

Relay 2 in the DTT scheme shown in *Figure 2.34* accepts the direct trip bits from all ports for which the DTT function is enabled (set EDTT = Y on any enabled port to accept direct trip bits on that port). The DTT logic combines all received direct trip bits through a logical OR operation (any remote line relay that trips its breaker initiates a direct transfer trip in the local relay). The disturbance detection logic supervises the combined direct trip bits with the START Relay Word bit for extra security against undetected bit errors in the communications channel. Because of channel delay between Relays 1 and 2, Relay 2 has more fault data when it receives the direct trip bit than does Relay 1 when it sends the direct trip bit. Therefore, the START bit is already asserted in Relay 2 when the direct trip bit arrives from Relay 1, and the DTT scheme suffers no speed penalty because of the supervision. If Relay 2 does not detect any disturbance (START bit is deasserted), it still accepts and processes the direct trip bit, but only after an intentional 10 ms security delay.

As soon as the DTT logic receives and validates the direct trip bits, it passes them to the trip logic to initiate tripping, as shown in *Figure 2.32*.

Trip Logic Implementation

This subsection provides implementation details that are helpful when evaluating SEL-T400L feasibility for your application and for testing and commissioning the SEL-T400L.

POTT Key Transmitter Logic

The key transmitter logic activates the phase-segregated permissive trip bits (KEYA, KEYB, and KEYC) to indicate to the remote relay the presence of a forward event (see *Figure 2.35*). The logic uses the TD32 element forward indication to assert these bits. The logic uses the TW32 element forward indication to assert the KEYTW bit. Select or deselect the TW32 element in the POTT key logic by setting ETW32 to Y or N, respectively (set EADVS = Y to gain access to the ETW32 setting).

The POTT key logic asserts the TDRBA Relay Word bit when the TD32 element detects a reverse fault on Phase A. If the reverse-fault indication lasts longer than time period TDRBP (e.g., 5 ms), the TDRBA bit remains asserted for an extra time TDRBD (e.g., 80 ms) after TD32RA deasserts. The TDRBD delay provides enough time for the remote overreaching elements and communications channel to reset after a prior external fault clears.

NOTE: On a per port basis, select either SEL MB8 encoding for signaling local SEL relays and SEL I/O devices or IEEE C37.94 encoding for signaling the remote SEL-T400L over compliant multiplexers. Use SEL MB8 encoding and a media converter to interface with multiplexers not compliant with IEEE C37.94. When using SEL MB8 encoding, select the baud rate on a per port basis. When using IEEE C37.94 encoding, the data rate is 1x64 kbps. The maximum channel latency is 15 ms for POTT applications.

When the local relay issues a trip command, assertion of the TPA, TPB, and TPC Relay Word bits also asserts the corresponding KEYA, KEYB, and KEYC Relay Word bits for extending the permissive trip signals after the directional elements drop out. The SEL-T400L transmits the KEYA, KEYB, and KEYC bits on MIRRORED BITS 1, 2, and 3, respectively, on Ports 1 through 3 (see *Table 3.1*) and on the direct point-to-point fiber-optic Port 6. The relay transmits these bits when the corresponding port setting is set to EPORT = Y. Assertion of the BLK contact input blocks the KEYA, KEYB, KEYC, and KEYTW bits. Therefore, when blocking the local relay via the BLK contact input (such as for testing the relay), you also effectively block the POTT logic at all terminals of the protected line.

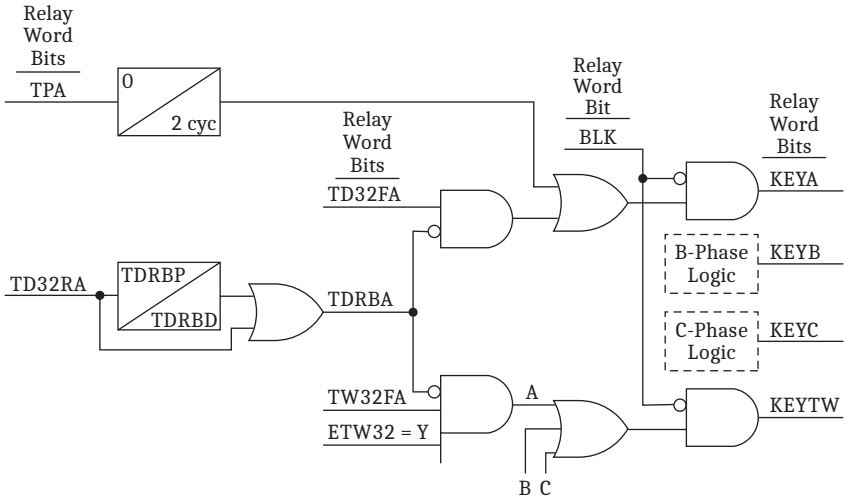

Figure 2.35 POTT Key Transmitter Logic (Phase A Logic Shown)

POTT Receiver Logic

The local relay receives permissive trip bits from the remote line terminals through MIRRORED BITS communications (assertion of PTMBA, PTMBB, PTMBC, or PTMBTW) or the fiber-optic channel (assertion of PT87LA,

PT87LB, PT87LC, or PT87LTW). The Port 6 (direct point-to-point fiber-optic channel) permissive trip signals are suitable for two-terminal applications. The direct point-to-point fiber-optic channel acts as a primary POTT channel or a redundant channel to the MIRRORED BITS channel. With MIRRORED BITS communications (Port 1, 2, or 3), the POTT logic is suitable for lines with as many as four terminals. *Figure 2.36* shows how the trip permission logic asserts the Phase A trip permission bit, PTMBA. This logic combines the corresponding MIRRORED BITS based on the EPOTT setting for Ports 1, 2, and 3. The permissive signal received via MIRRORED BITS is then combined with the permissive signal received on Port 6 via an OR gate. Set EPOTT = N for Port 6 when applying the POTT scheme to lines with three or four terminals. The POTT receiver logic uses the same logic to combine the phase-segregated permissive trip bits (Bits 1, 2, and 3) and the bit that the TW32 element sends (Bit 8).

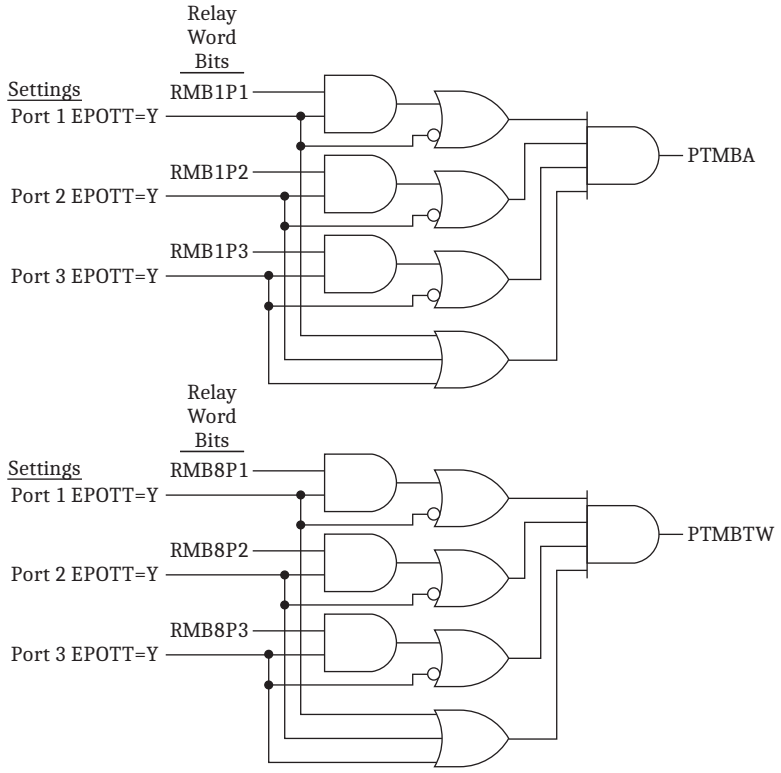

Figure 2.36 POTT Receiver Logic (PTMBA and PTMBTW Logic Shown)

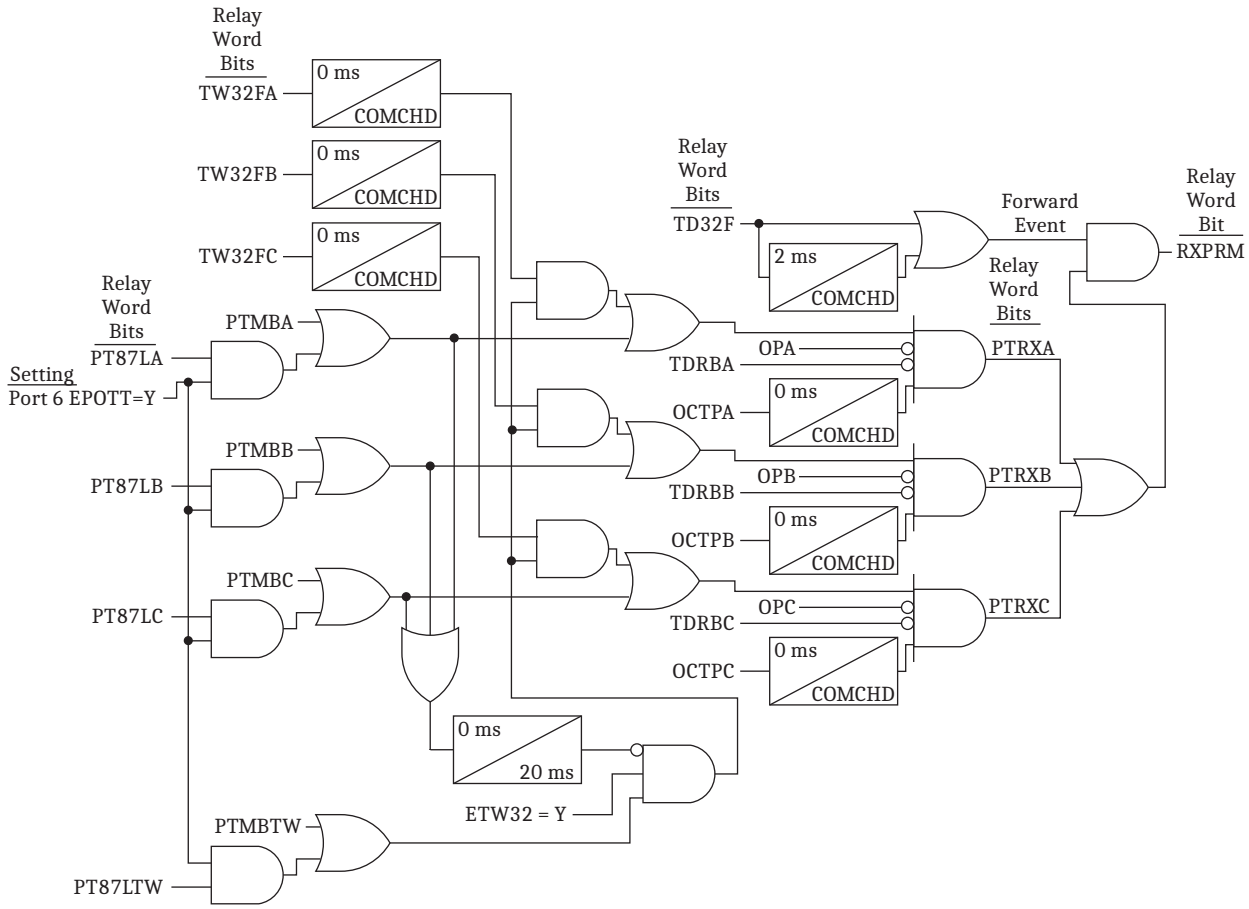

Figure 2.36 POTT Receiver Logic (PTMBA and PTMBTW Logic Shown) (Continued)

If the POTT logic does not receive any of the phase-segregated permissive trips and ETW32 is set to Y, the logic supervises the received permissive trip bit (PTMBTW and/or PT87LTW) with the phase-segregated TW32 forward indication bits and combines the resulting phase-segregated bits with the received phase-segregated permissive trip bits. In this way, when the remote TW32 element sends a permissive trip on Bit 8, the element accelerates one of the phase-segregated permissive trip bits in the receiving relay. This causes the POTT operation to speed up by about 1.5 ms. If the logic receives any of the phase-segregated permissive trips, it refrains from using Bit 8 for acceleration and instead maximizes the fault type identification accuracy provided by the phase-segregated permissive trip bits.

The phase-segregated directional overcurrent elements (OCTPA, OCTPB, and OCTPC) supervise trip permission for security during switching operations. The current reversal logic (TDRBA, TDRBB, and TDRBC) supervises the POTT trip for security during clearing of a fault on a parallel line.

The POTT logic extends assertion of the TD32 bits according to the communications channel delay COMCHD (e.g., 15 ms) to indicate the presence of a forward event. This extension ensures that the local forward indication based on incremental quantities is present when the remote trip permission signal is received after the channel delay. The logic extends the OCTP and the TW32FA, TW32FB, and TW32FC Relay Word bits for the same reason. POTT trip permission is granted (assertion of the RXPRM bit) when at least one of the PTRX bits asserts and the local TD32 forward indication is asserted.

DTT Transmitter Logic

NOTE: On a per port basis, select either SEL MB8 encoding for signaling local SEL relays and SEL I/O devices or IEEE C37.94 encoding for signaling the remote SEL-T400L over compliant multiplexers. Use SEL MB8 encoding and a media converter to interface with multiplexers not compliant with IEEE C37.94. When using SEL MB8 encoding, select the baud rate on a per port basis. When using IEEE C37.94 encoding, the data rate is 1x64 kbps.

The DTT logic sends direct transfer trip commands to the remote terminal upon assertion of the TPA, TPB, and TPC bits as long as the BLK contact input is not asserted (see *Figure 2.37*). Note that when you block the local relay via the BLK contact input for testing, you do not need to disable the DTT logic in remote relays to avoid remote tripping from local test conditions. The relay sends the direct transfer trip bits DTTXA, DTTXB, and DTTXC on the enabled MIRRORED BITS ports and through the direct point-to-point fiber-optic channel port. The SEL-T400L transmits the DTTXA, DTTXB, and DTTXC bits via MIRRORED BITS 4, 5, and 6, respectively (see *Table 3.1*). These bits are transmitted on Ports 1 through 3 and on Port 6 when the corresponding port setting is set to EPORT = Y.

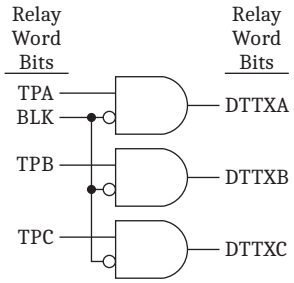

Figure 2.37 DTT Transmitter Logic

DTT Receiver Logic

The SEL-T400L receives phase-segregated direct transfer trip signals DTMBA, DTMBB, and DTMBC through MIRRORED BITS Ports 1, 2, and 3 and through the direct point-to-point fiber-optic Port 6 and accepts them if the corresponding port setting is set to EDTT = Y (see *Figure 2.38*).

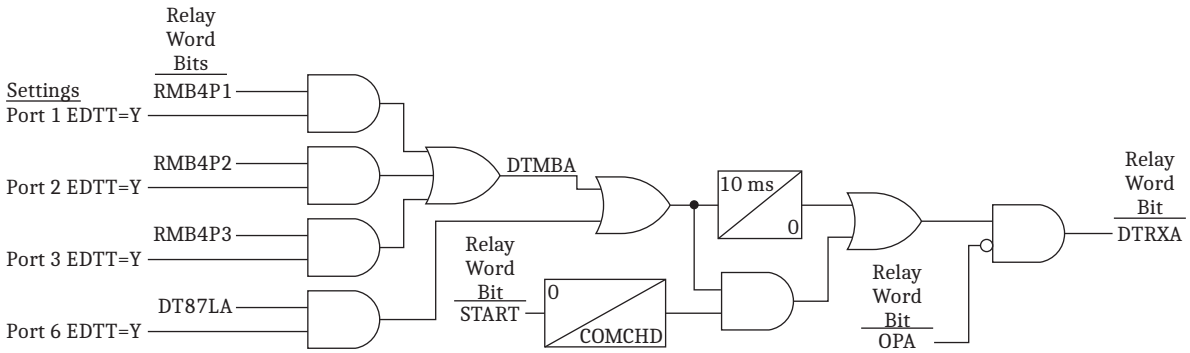

Figure 2.38 DTT Receiver Logic

The START bit supervises the received trip commands for a short time (e.g., 10 ms). This supervision prevents undesired DTT operations in case of the unlikely occurrence of undetected bit errors in the communications channel, especially when using an analog channel (i.e., in applications with a power line carrier). The DTRXA bit asserts when a valid Phase A direct trip is received.

Trip Condition

Use the TR setting to select all Relay Word bits from which you want to initiate a trip. SEL recommends using the phase and ground distance protection and the TW differential protection for tripping (i.e., set TR = [TD21P, TD21G, TW87]).

The POTT and DTT communications-assisted schemes are routed for tripping independently of the TR setting. In typical applications, you do not need to configure POTT or DTT bits in the TR setting.

If you use a general Relay Word bit (such as an input contact or a MIRRORED BITS input) rather than the phase-selective SEL-T400L protection element or scheme (TD21 and TW87), the trip logic executes a three-pole trip if the trip is initiated only from that Relay Word bit.

Phase Selection and Tripping

Figure 2.39 shows phase-selection and tripping logic in more detail. The trip bit (TR) and the POTT and DTT schemes place a call for trip (TRPRM). The logic interlocks the TRPRM bit with the blocking bit, BLK, from the BLK contact input and passes it downstream for execution. The logic executes the trip in Phase A, B, C, or in all three phases, based on the phase-selection bits (APS, BPS, CPS, and 3PS).

The logic selects Phase A for tripping if one or more of the following conditions are met:

- The TD21G element asserts in Phase A and TD21G is selected in the TR setting.
- The TW87 scheme asserts in Phase A and TW87 is selected in the TR setting.
- The DTT scheme operates in Phase A.
- The POTT scheme operates in Phase A, as signaled by reception of the permissive trip in Phase A (PTRXA) coinciding with pickup of the TD32 forward element in Phase A (TD32FA).

The logic selects all three phases for tripping if one or more of the following conditions are met:

- The TD21P element asserts and TD21P is selected in the TR setting.
- The 3PT bit is already asserted by the trip logic to indicate that at least two phases have already been tripped.
- The E3PT bit, reflecting the status of the E3PT setting, is asserted to force a three-pole trip regardless of the fault type.
- TR asserts and the TD21, TW87, POTT, and DTT schemes fail to select any phase.

The TW87 scheme asserts in Phase A, B, or C only, or in all three phases, and therefore it is not explicitly included in the three-phase selection logic.

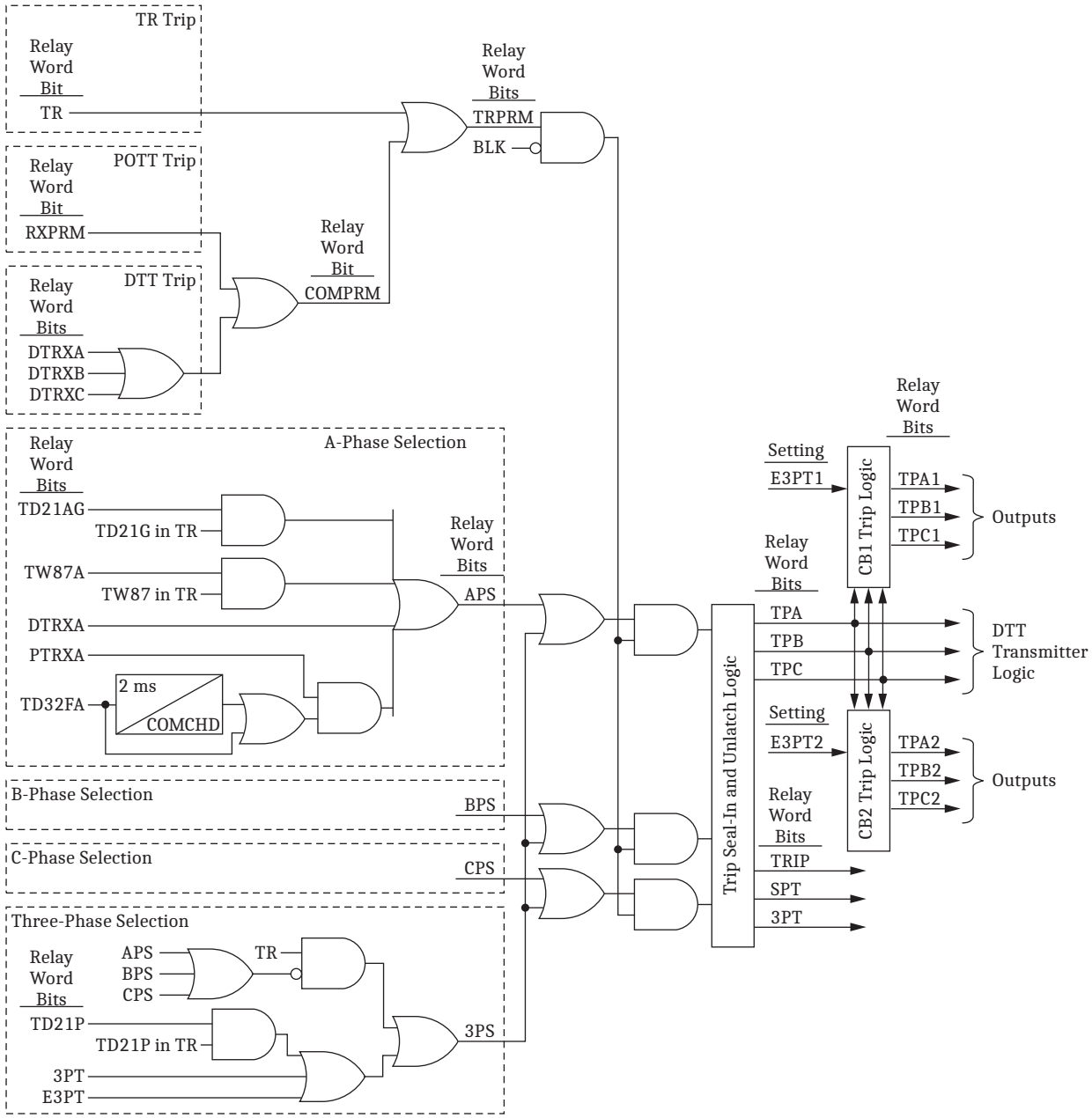

Figure 2.39 Phase Selection and Tripping Logic

Assertion of the trip bits (TPA, TPB, and TPC) initiate direct transfer trip bits on Ports 1 through 3 and Port 6 if these ports are enabled (EPORT = Y), as shown in *Figure 2.37*.

Three-Pole and Single-Pole Tripping

The SEL-T400L is designed for single-pole and three-pole tripping applications. Set E3PT to logical 1 (E3PT = ONE) to only allow three-pole tripping. In this application, all trips initiated via the TR setting, POTT scheme, or DTT scheme are executed as three-pole trips.

In single-pole tripping applications, set E3PT to a Relay Word bit (typically a contact input or a MIRRORED BITS input) to signal the logic to execute a single-pole trip for single-line-to-ground faults (E3PT is deasserted [logical 0]), or to

force a three-pole trip for single-line-to-ground faults (E3PT is asserted [logical 1]). When E3PT is asserted, all trips asserted by the TR setting, POTT scheme, or DTT scheme are converted into three-pole trips. Consider using your autoreclosing relay to provide the E3PT signal to the SEL-T400L. Typically, you convert single-pole trips to three-pole trips if a single-pole-trip-and-reclose sequence is already in progress, the breaker is temporarily incapable of reclosing, or system operators temporarily want to force three-pole trips for single-line-to-ground faults.

The SEL-T400L includes trip-during-open-pole logic for forcing a three-pole trip during single-pole-tripping-and-reclosing sequences (see *Figure 2.40*). This logic asserts the TOP Relay Word bit for a predetermined TOPD time (e.g., 1.5 s) after the SEL-T400L issues a single-pole trip and the trip command unlatches. You can use this logic to substitute for the external E3PT signal by selecting the TOP bit in the E3PT setting.

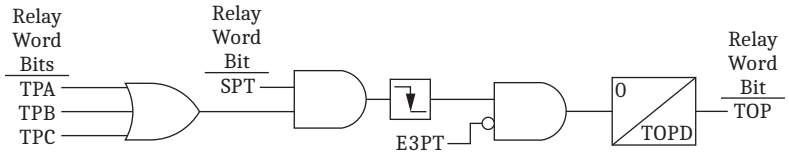

Figure 2.40 Trip-During-Open-Pole Logic

When the local relay is forced to issue a three-pole trip, the phase-segregated DTT signals are transmitted in a manner similar to that for a three-phase fault, and processing of these signals at the remote relay or relays also results in a three-pole trip.

In single-pole tripping applications, the SEL-T400L trip logic allows you to control single-pole vs. three-pole tripping on a per-breaker basis. For example, in breaker-and-a-half bus configurations, you may choose to always trip the middle breaker three-pole, but to trip the bus breaker single-pole or three-pole depending on the fault type. Use the E3PT1 and E3PT2 advanced settings to force the first and second breaker, respectively, to trip three-pole. You can force the three-pole breaker operation permanently by selecting E3PT*n* = ONE, or dynamically by assigning a contact input or a MIRRORED BITS input to E3PT*n*. E3PT1 and E3PT2, when asserted, override the single-pole trip for Breakers 1 and 2, respectively. If E3PT is asserted, both breakers trip three-pole regardless of the status of E3PT1 and E3PT2.

Trip Seal-In and Unlatch Logic

The trip logic maintains the trip commands (TPA, TPB, and TPC) for a minimum of 200 ms and seals them on a per-phase basis as long as the open-pole logic detects a current flow. The trip unlatch logic unlatches the trip outputs on a per-phase basis based on the assertion of the corresponding open-pole detection bit (OPA, OPB, and OPC). Make sure the Open-Pole Current Selection (OPCS) setting is configured to reflect the breaker current. In most applications, set OPCS = LINEI to instruct the open-pole logic to use the line current. In applications with line-side reactors, set OPCS to indicate the breaker current and not the combined breaker and reactor current. For Phase A, the logic unlatches the TPA trip output when the corresponding open-pole detection bit (OPA) asserts and there is no standing trip condition. When 3PT is asserted, the logic unlatches the trip output when all open-pole detection bits assert and there is no standing trip. The Target Reset bit (TRGTR), in response to the **TAR R** command or the front-panel TARGET RESET pushbutton, unlatches the trip output if there is no standing trip condition.

Trip Logic Relay Word Bits and Settings

Table 2.19 lists Relay Word bits associated with the trip logic. *Table 2.20* lists settings associated with the trip logic.

Table 2.19 Relay Word Bits Related to Trip Logic (Sheet 1 of 2)

Relay Word Bit	Description
TRIP	Trip command sent to the output contacts
SPT	Single-pole trip command sent to the output contacts
3PT	Three-pole trip command sent to the output contacts
APS BPS CPS	A-phase, B-phase, and C-phase selected for tripping, respectively
3PS	Three phases selected for tripping
TPA TPB TPC	Phase A, B, and C trip, respectively
TPA1 TPB1 TPC1	Close TPA1, TPB1, and TPC1 output, respectively
TPA2 TPB2 TPC2	Close TPA2, TPB2, and TPC2 output, respectively
TR	Unconditional trip condition asserted
KEYA KEYB KEYC	Transmit permissive trip signal; Phase A, B, and C, respectively
KEYTW	Transmit permissive trip signal; TW32
PTRXA PTRXB PTRXC	Supervised permissive trip received; Phase A, B, and C, respectively
PT87LA PT87LB PT87LC	Permissive trip received from TW87 channel; Phase A, B, and C, respectively
PT87LTW	Permissive trip received from TW87 channel; TW32
TDRBA TDRBB TDRBC	Current reversal guard asserted; Phase A, B, and C, respectively
RXPRM	Supervised POTT trip permission
DTTXA DTTXB DTTXC	Transmit direct transfer trip; Phase A, B, and C, respectively
DTRXA DTRXB DTRXC	Supervised direct transfer trip received; Phase A, B, and C, respectively
DT87LA DT87LB DT87LC	Direct transfer trip received from TW87 channel; Phase A, B, and C, respectively
COMPRM	Communications-assisted trip
OCTPA OCTPB OCTPC	Overcurrent supervision asserted for POTT; Phase A, B, and C, respectively
TRPRM	Trip permission

Table 2.19 Relay Word Bits Related to Trip Logic (Sheet 2 of 2)

Relay Word Bit	Description
TOP	Open-pole after single-pole trip; trip three-pole for the second fault
E3PT	Status of E3PT setting
BLK	BLK contact input asserted
TRGTR	TARGET RESET pushbutton pressed or command issued

Table 2.20 Settings Related to POTT, DTT, and Trip Logic

Name	Description	Range	Default (5 A)	Default (1 A)
TR	Unconditional trip (as many as 24 Relay Word bits)	All RWBs, NA	TD21P, TD21G, TW87	TD21P, TD21G, TW87
E3PT	Force three-pole trip (as many as 24 Relay Word bits)	All RWBs, NA	ONE	ONE
E3PT1	Force three-pole trip for Breaker 1	All RWBs, NA	NA	NA
E3PT2	Force three-pole trip for Breaker 2	All RWBs, NA	NA	NA
ETW32	Enable TW32 to key POTT permissive trip	Y, N	Y	Y
EPOTT	Enable POTT, Ports 1, 2, 3, and 6	Y, N	N	N
EDTT	Enable DTT, Ports 1, 2, 3, and 6	Y, N	Y	Y
TP67G	POTT ground overcurrent supervision threshold (A, secondary)	5 A: 0.1–10.0 1 A: 0.02–2	0.3	0.06
TP67P	POTT phase overcurrent supervision threshold (A, secondary)	5 A: 0.1–10.0 1 A: 0.02–2	0.3	0.06
OPCS	Open-pole current selection	LINEI, IW, IX	LINEI	LINEI

Follow these general settings recommendations when selecting settings related to the trip logic.

TR

Select in the TR setting all elements (Relay Word bits) from which you want to initiate a trip. Phase and ground distance protection (TD21P and TD21G, respectively) and the TW differential scheme (TW87) are all SEL-T400L protection functions that you can use for selective tripping. All three functions provide phase selection and you can therefore use them in both single-pole and three-pole tripping applications. In addition, you can initiate an unconditional trip from a contact input or MIRRORED BITS input. In such cases, if TR asserts and the phase-selection logic of the trip logic fails to identify the faulted phases, the SEL-T400L initiates a three-pole trip.

Avoid using the TR setting for executing direct transfer trips from an external relay (such as a breaker failure relay, for example).

E3PT

Use the E3PT setting for control of single-pole versus three-pole tripping. The trip logic executes a three-pole trip for all fault types if E3PT is asserted, and it trips single-pole or three-pole (depending on the fault type) if E3PT is deasserted. Use the E3PT setting to permanently or temporarily force three-pole tripping. Set E3PT to ONE (Boolean logical 1) to configure the trip logic to permanently trip the three poles of the breaker. Set E3PT to a contact input or a MIRRORED BITS input to signal the SEL-T400L, normally configured for single-pole tripping, to

convert all trips into three-pole trips. Use the autoreclosing relay to provide the E3PT signal based on the recloser logic status, breaker health, and operator preferences. You may consider using the TOP Relay Word bit in the E3PT setting to substitute for the external signal from the autoreclosing relay.

E3PT1 and E3PT2

In single-pole tripping, dual-breaker applications, use the E3PT1 and E3PT2 settings for the trip outputs TPA1, TPB1, TPC1, and TPA2, TPB2, TPC2, respectively, to decide if a given breaker will trip single-pole or three-pole. For example, in breaker-and-a-half bus arrangements, you may consider always tripping the middle breaker three-pole. If you choose such tripping, set E3PT*n* = ONE for the middle breaker. You can also use a contact input or MIRRORED BITS input to dynamically force three-pole tripping for a selected breaker based on the breaker status or system operating conditions. In such an application, consider using the autoreclosing relay to provide the E3PT1 or E3PT2 signal to the SEL-T400L. Set EADVS = Y to gain access to the E3PT1 and E3PT2 settings.

ETW32

Use the TW32 element to accelerate POTT keying in applications that demand maximum operating speed. The TW32 element is very fast and can be extremely sensitive. It can assert for forward events that are not faults (a lightning strike or an in-zone switching event such as bypassing an in-line series capacitor, for example). The POTT logic uses overcurrent supervision in the receiving relay to secure permissive trips sent from the TW32 element. Because of the CCVT response, the TW32 element may not be fully dependable. To allow the TW32 element to key the POTT permissive trip signal, set ETW32 = Y. The TW32 element is operational only if the TWLPT setting is greater than 50 µs. ETW32 = Y will not take effect if TWLPT is less than 50 µs. Do not set ETW32 = Y on hybrid lines, lines with taps, and multiterminal lines.

EPOTT (Ports 1, 2, 3, and 6)

Use the EPOTT setting on Ports 1, 2, 3 (MIRRORED BITS), and 6 (direct point-to-point fiber-optic channel) to control reception of the phase-segregated permissive trip signals. The SEL-T400L transmits phase-segregated permissive trips unconditionally on TMB1 (Phase A), TMB2 (Phase B), and TMB3 (Phase C) bits. The SEL-T400L expects phase-segregated permissive trips on RMB1 (Phase A), RMB2 (Phase B), and RMB3 (Phase C) bits. Set EPOTT = Y to accept the received permissive trips, and set EPOTT = N to ignore the received permissive trips on any given port. When sending permissive trips from an SEL relay with programmable MIRRORED BITS (such as an SEL-421), make sure the permissive trips are sent on Bits 1, 2, and 3. You can use MIRRORED BITS Ports 1, 2, and 3 to implement a POTT scheme for lines with as many as four terminals. Use EPOTT on Port 6 in two-terminal applications to connect to a primary POTT channel or to a redundant channel while a MIRRORED BITS port connects to the primary channel (see *Figure 2.41*).

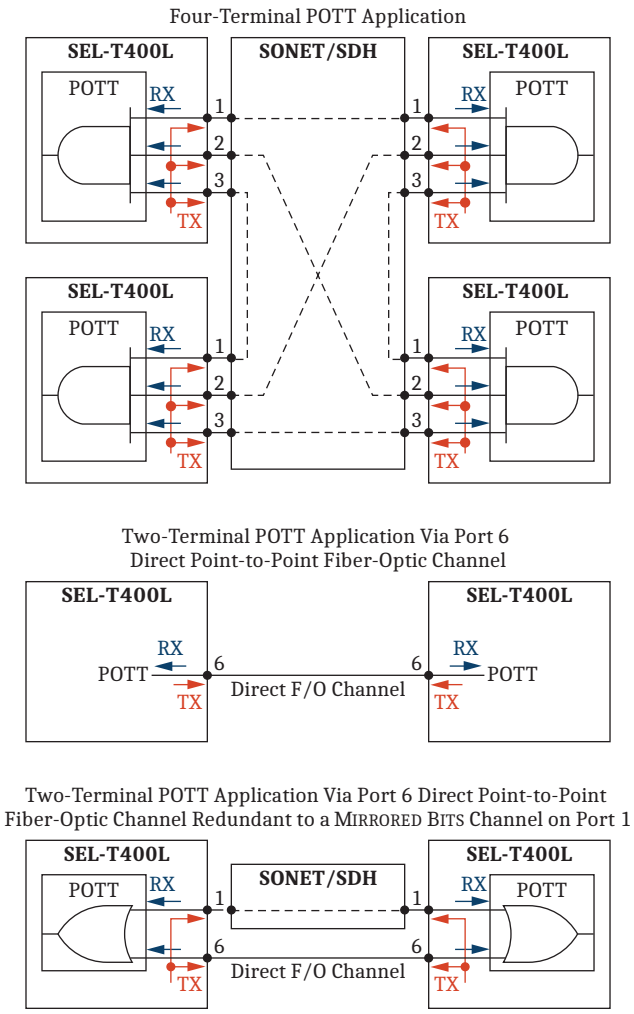

Figure 2.41 Example POTT Applications

EDTT (Ports 1, 2, 3, and 6)

Use the EDTT setting on Ports 1, 2, 3 (MIRRORED BITS), and 6 (direct point-to-point fiber-optic channel) to control processing of the phase-segregated direct trip signals. The SEL-T400L transmits phase-segregated direct trips unconditionally on TMB4 (Phase A), TMB5 (Phase B), and TMB6 (Phase C) bits. The SEL-T400L expects phase-segregated direct trips on RMB4 (Phase A), RMB5 (Phase B), and RMB6 (Phase C) bits. Set EDTT = Y to accept the received direct trips, and set EDTT = N to ignore the received direct trips on any given port. When sending direct trips from an SEL relay with programmable MIRRORED BITS (such as an SEL-421) make sure the direct trips are sent on Bits 4, 5, and 6. You can use MIRRORED BITS Ports 1, 2, and 3 to implement a DTT scheme for lines with as many as four terminals. Use EDTT on Port 6 as a primary DTT channel or as a redundant channel to the channel that uses a MIRRORED BITS port (similar to the POTT application shown in *Figure 2.41*).

The built-in DTT is meant for tripping breakers at all line terminals from the SEL-T400L elements at any line terminal. Avoid using the TR setting for executing direct transfer trips from an external relay (such as a breaker failure relay, for example). You can use the DTT function on a selected MIRRORED BITS port to initiate the SEL-T400L trip from an external relay, but you must consider that local trips and received direct trips are processed without distinction in the SEL-T400L. As a result, at the remote relay, you may have difficulty controlling

autoreclosing, breaker failure protection, or lockout functions differently for line faults and external direct transfer trips. You may consider using a timer in the breaker failure or autoreclosing relay to distinguish between trips for line faults and breaker failure trips. Apply caution in this advanced application.

TP67G and TP67P

In applications to lines without in-line series compensation, set the overcurrent supervision for the POTT scheme for the required sensitivity. In applications to lines with in-line series compensation, set the overcurrent supervision for the POTT scheme for security against capacitor-switching events. Refer to *Overcurrent Supervision Elements on page 2.22* for more information on selecting the TP67G and TP67P settings.

OPCS

Use the OPCS setting to control the current input for the open-pole logic. Set OPCS = LINEI to use the line current as per the LINEI source selection setting in the open-pole logic. Set OPCS = IW to use the W input currents in the open-pole logic. This option applies to applications in which the line current is a combination of the breaker and line-side reactor currents (LINEI = COMB) and the breaker current is wired to the W input of the SEL-T400L. Set OPCS = IX to use the X input currents in the open-pole logic. This option applies to applications in which the line current is a combination of the breaker and line-side reactor currents (LINEI = COMB), and the breaker current is wired to the X input of the SEL-T400L. Select EADVS = Y to edit the OPCS setting. The OPCS setting is available in the AC Inputs menu in QuickSet.

Refer to *Section 6: Settings Guidelines* for more detailed step-by-step instructions on selecting SEL-T400L protection settings.

ARMED LED Target Logic

The **ARMED** tricolor LED on the SEL-T400L front panel indicates the status of the relay protection elements and schemes. Use this section to understand the **ARMED** LED logic and to learn how to troubleshoot abnormal conditions signaled by the **ARMED** LED.

The **ARMED** LED is off when all of the SEL-T400L protection elements or schemes (TD21, TW87, POTT, and DTT) are out of service either because they are not enabled and configured to trip, or because the BLK contact input blocks their operation. When the **ARMED** LED is off, the SEL-T400L does not provide protection. However, this situation is normal if the elements are intentionally disabled via settings, or intentionally blocked via the BLK contact input.

The **ARMED** LED illuminates green when all of the SEL-T400L protection elements and schemes that are enabled and configured to trip are fully operational.

A green **ARMED** LED indicates that all protection elements intended for tripping are fully operational and will respond to a fault as expected. For example, a green **ARMED** LED means that if you enabled the TD21P element by setting TD21MP to a value other than OFF, and you configured this element for tripping by including TD21P in the TR setting, the TD21P element is operational (e.g., it is not blocked by the LOP logic). Similarly, a green **ARMED** LED means that if you enabled the TW87 scheme by setting ETW87 = Y, and you configured this scheme for trip-

ping by including TW87 in the TR setting, the TW87 scheme is operational (e.g., the direct point-to-point fiber-optic channel on Port 6 and the remote SEL-T400L are working correctly).

Expect the ARMED LED to be illuminated green under normal conditions. Ensure that the ARMED LED illuminates green after you energize the protected line (assuming that there is sufficient pickup current to reset the open-pole condition) following relay commissioning or maintenance testing.

The ARMED LED illuminates red if one or more protection elements or schemes are enabled and configured to trip, but none of them are operational.

A red ARMED LED means the relay does not provide any protection with the TD21, TW87, POTT, or DTT elements and schemes. Note that the relay can be operational (ENABLED LED is green) with no protection available (ARMED LED is red) because of issues external to the relay. Such issues can include a loss-of-potential (LOP) condition, communications channel problems, or remote relay problems.

The ARMED LED illuminates yellow for any of the following:

- One or more protection elements or schemes are enabled and configured to trip, and some of those (but not all) are not operational.
- Some, but not all, protection loops are armed, such as during a single-pole open condition (see *Arming Logic on page 2.8*).
- The relay is subjected to excessive electromagnetic interference (EMI) in either voltages or currents (see *Appendix G: Signal Processing*).
- The TW87 scheme is configured for tripping and the remote relay is subjected to excessive EMI in the remote currents.

A yellow ARMED LED indicates that the relay is providing some protection, but issues or operating conditions that may degrade dependability of the TD21, TW87, POTT, and DTT elements and schemes are present. For example, if the DTT scheme is enabled on Port 1 and that port loses communication, the DTT scheme becomes unavailable and the ARMED LED illuminates yellow to indicate that some protection functionality is temporarily lost. If no other elements are available at that time and the DTT scheme was the last available protection element for the line, the ARMED LED illuminates red (because no protection feature presently enabled and configured to trip is operational).

Use *Table 2.21* to troubleshoot unexpected ARMED LED states.

Table 2.21 Troubleshooting Unexpected ARMED LED States

Unexpected State	Troubleshooting
Off	Inspect and rectify settings for the TD21, TW87, POTT, and DTT protection elements and schemes; the TR setting; and the status of the BLK contact input.
Illuminated Red	Inspect and rectify settings for the TD21, TW87, POTT, and DTT protection elements and schemes; the TR setting; and the LOP, MBOK1, MBOK2, MBOK3, and TW87OK status LEDs.
Illuminated Yellow	Inspect and rectify settings for the TD21, TW87, POTT, and DTT protection elements and schemes; the TR setting; and the VILEMI, ILREMI, and AGARM through CAARM Relay Word bits.

When testing the SEL-T400L without using the built-in TW test mode (i.e., **TWTEST** command), ensure that the ARMED LED is illuminated green before you apply an internal fault or other test condition.

When the TW test mode is enabled, the arming logic supervision for the TW32 element and the TW87 scheme is disabled (see *Section 11: Testing and Commissioning*). Additionally, when the TW test mode is enabled, arming logic supervision and pre-event voltage polarity supervision in the line monitoring logic is disabled (see *Line Monitoring on page G.12*). In this mode, you do not need to apply power frequency voltages or currents to the relay terminals prior to, or during, the fault test. If the TW test mode is enabled and no prefault voltage or current is applied, the **ARMED** LED will normally illuminate red. If the **ARMED** LED is off, troubleshoot it (as shown in *Table 2.21*) before testing the TW32 element, TW87 scheme, or line monitoring logic.

When the TW test mode is enabled, the **ARMED** LED pulses. The test mode has a time-out limit. Cancel the test mode via the **TWTEST C** or **TWTEST X** command before returning the relay to service.

SECTION 3

Protection Communications Channels

Introduction

NOTE: On a per port basis, select either SEL MB8 encoding for signaling local SEL relays and SEL I/O devices or IEEE C37.94 encoding for signaling the remote SEL-T400L over compliant multiplexers. Use SEL MB8 encoding and a media converter to interface with multiplexers not compliant with IEEE C37.94. When using SEL MB8 encoding, select the baud rate on a per port basis. When using IEEE C37.94 encoding, the data rate is 1x64 kbps.

The SEL-T400L uses digital protection signaling, rather than contact I/O, for line protection schemes and initiating local breaker failure and autoreclosing relays. Digital protection signaling is provided on fiber-optic Ports 1, 2, and 3 by using MIRRORED BITS protocol with user-configurable SEL MB8 or IEEE C37.94 encoding and on Port 6 over a direct point-to-point fiber-optic channel by using a proprietary SEL-T400L protocol. Digital signaling is secure and fast because of embedded message integrity codes that protect the data and eliminate the need for security (debounce) delays.

When possible, use digital signaling between SEL-T400L Relays in your line protection scheme, and between the SEL-T400L Relay and local breaker failure and autoreclosing relays. You can use SEL remote I/O modules to convert the MIRRORED BITS I/O to contact I/O. The SEL-2507 High-Speed Remote I/O Module is a preferred companion product because of its high data rate, made possible by the trip-rated hybrid output (a combination of electromechanical and solid-state outputs). You can also use the SEL-2505 and SEL-2506 Remote I/O Modules with fiber-optic ports, but your system response will be slightly slower because of slower data rates. Use the SEL-2505 trip-rated electromechanical outputs to drive overly sensitive digital inputs. See *Section 10: Installation* for practical information regarding use of hardwired inputs and outputs.

This section provides details on using digital signaling for the following protection functions: POTT, DTT, and TW87 line protection schemes, and breaker failure and autoreclose initiation. The section is organized as follows:

- *Overview of Protection Inputs and Outputs on page 3.2* provides a general overview of the relay inputs and outputs and explains their intended purposes and usage limitations.
- *MIRRORED BITS Communications on page 3.5* describes configurations and usage of MIRRORED BITS I/O including loopback testing, interfacing with SEL remote modules, and establishing communications via IEEE C37.94-compliant multiplexers.
- *Direct Point-to-Point Fiber-Optic Channel on page 3.17* describes configurations, usage, and loopback testing of the direct point-to-point fiber-optic channel.
- *Typical Protection Signaling Applications on page 3.22* provides application examples for digital protection signaling methods and configurations.

Overview of Protection Inputs and Outputs

The SEL-T400L provides the following inputs and outputs directly on the relay rear panel:

- Two sets of three-phase current inputs for dual-breaker applications
- Three-phase, four-wire voltage input with a common neutral
- Two sets of three-phase trip-rated outputs for dual-breaker, single-pole tripping applications
- Alarm output with normally opened and normally closed contacts
- Five contact inputs with a common terminal for auxiliary non-protection applications including one contact input dedicated to blocking protection functions of the relay
- IRIG-B input for an external time source for accurate time-stamping of records

With the exception of the four contact inputs, all of these inputs and outputs are preprogrammed and you cannot change their functionality.

The SEL-T400L provides additional inputs and outputs via three fiber-optic MIRRORED BITS Ports (1, 2, and 3). These ports operate identically and are functionally interchangeable. SEL-T400L MIRRORED BITS communications serve a dual purpose. The primary application for the MIRRORED BITS ports is permissive and direct trip signaling for the POTT and DTT schemes. You can also use MIRRORED BITS communications for signaling local devices for such applications as autoreclose initiation (ARI) or breaker failure initiation (BFI).

Each MIRRORED BITS port allows you to receive an additional eight inputs and control an additional eight outputs. Note, however, that most of these MIRRORED BITS inputs and outputs are preprogrammed and you cannot change their functionality (see *Table 3.1*).

Table 3.1 MIRRORED BITS Assignments

MIRRORED BITS[a]	SEL-T400L Transmitted Bits (if EPORT = Y)	Application
MB1P*n*	KEYA	Permissive Trip, A-phase
MB2P*n*	KEYB	Permissive Trip, B-phase
MB3P*n*	KEYC	Permissive Trip, C-phase
MB4P*n*	DTTXA	Direct Trip, A-phase
MB5P*n*	DTTXB	Direct Trip, B-phase
MB6P*n*	DTTXC	Direct Trip, C-phase
MB7P*n*	ARC	Cancel Autoreclose
MB8P*n*	KEYTW	Permissive Trip, Keyed by TW32

[a] n = 1, 2, or 3.

In addition to the three MIRRORED BITS ports, the relay sends and receives protection signals over a direct point-to-point fiber-optic channel on Port 6. Port 6 uses small form-factor pluggable (SFP) transceivers. These transceivers are optional and you must order them separately based on the distance and fiber losses of your specific application.

The point-to-point fiber-optic channel on Port 6 is a dedicated connection between two SEL-T400L Relays for the TW87 protection scheme, two-terminal POTT and DTT applications, double-ended fault locating, and line monitoring.

You cannot connect any other device on Port 6 but the SEL-T400L, preferably running the same firmware revision. The relay sends and receives phase-segregated permissive and direct trips on Port 6, similarly to the MIRRORED BITS Ports 1, 2, and 3.

Figure 3.1 shows the binary input and output capabilities of the SEL-T400L, including the rear-terminal I/Os and those I/Os available over protection Ports 1, 2, 3, and 6.

The only outputs the relay directly provides on the rear panel are the high-speed trip-rated outputs for direct connection to two breakers on a per-phase basis or three-phase basis (TPA1 through TPC2), and the normally opened and normally closed alarm contacts (ALARM). The blocking input for blocking all protection functions of the SEL-T400L (BLK) is the only direct input available on the rear panel that the relay uses for protection applications. These tripping outputs and the blocking input are factory-assigned and you cannot change their functionality.

The SEL-T400L control inputs include security debounce timers. By default, the debounce timers are set to 2.0 ms. You can control these timers using the IN101D, IN102D, IN103D, IN104D, and BLKD settings as necessary. The relay allows a range from 0.0 to 100.0 ms for the debounce settings (you must set EADVS = Y to gain access to the debounce timers).

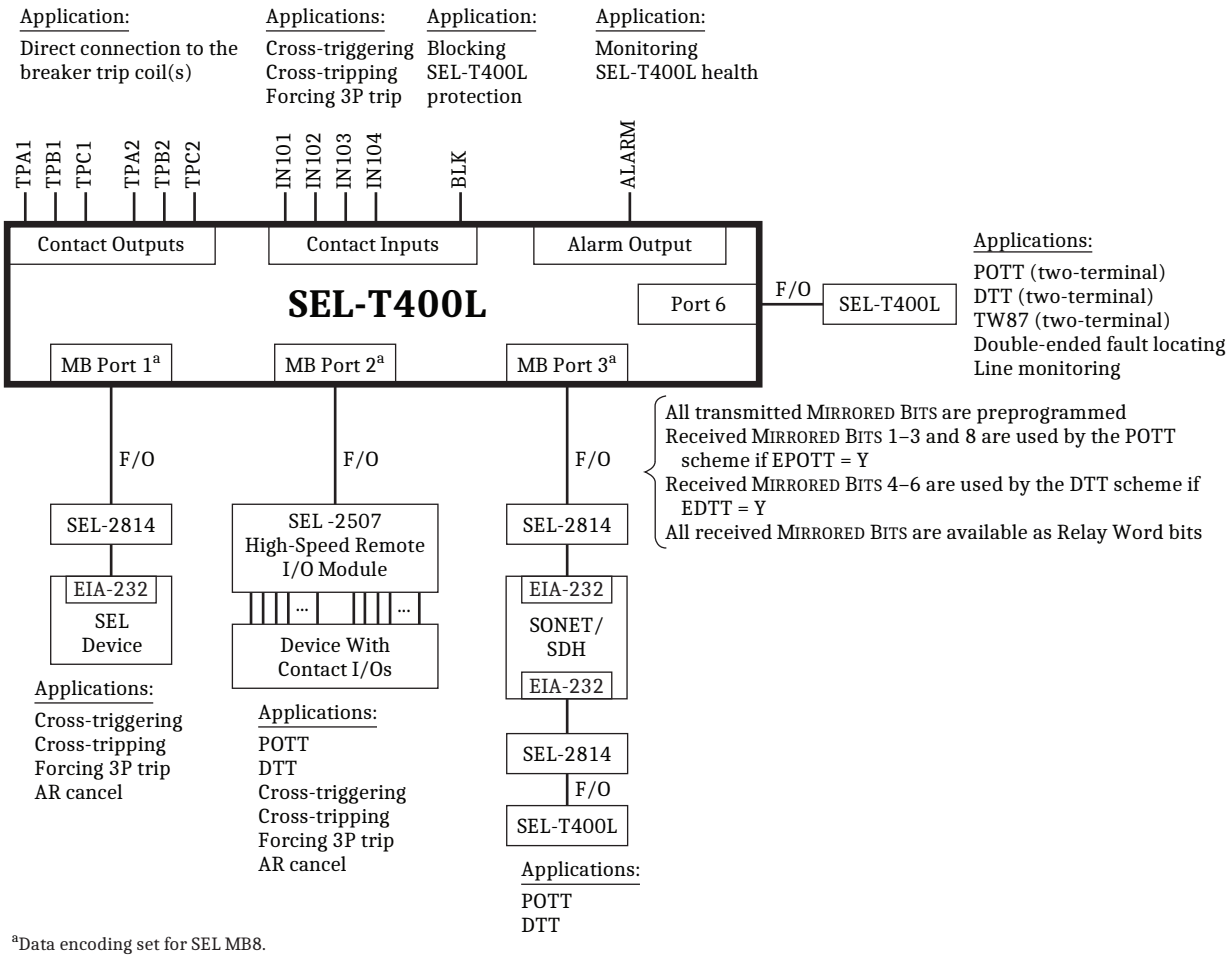

[a]Data encoding set for SEL MB8.

Figure 3.1 Input and Output Capabilities of the SEL-T400L

NOTE: You cannot send permissive or direct trips via output contacts, and you cannot bring permissive or direct trips to the SEL-T400L POTT or DTT schemes via contact inputs. Use Ports 1, 2, 3, or 6 for POTT and DTT applications.

The SEL-T400L provides four additional contact inputs (IN101 through IN104) for recording and fault location cross-triggering, cross-tripping of the SEL-T400L from other relays, and forcing three-pole tripping in single-pole tripping applications. You cannot use these inputs to bring the permissive or direct tripping signals to the SEL-T400L POTT or DTT schemes. You can only interface the permissive and direct trip signals via communications Ports 1, 2, 3, and 6.

MIRRORED BITS Ports 1, 2, and 3 are fiber-optic ports and require an SEL-2814 Fiber-Optic Transceiver to connect to devices that accept an electrical interface for serial communications. *Figure 3.1* shows three typical applications on each of these ports. You can use all of these applications independently and interchangeably on Ports 1, 2, or 3.

In the example shown in *Figure 3.1*, MIRRORED BITS Port 1 is connected to a local relay that is compatible with MIRRORED BITS communications. This relay can be an autoreclosing relay, a breaker failure relay, or a backup (companion) relay (see *Section 6: Settings Guidelines* for more information). Typical applications for MIRRORED BITS communications between the SEL-T400L and the local relay include breaker failure and autoreclosing initiation, forcing a three-pole trip in the SEL-T400L, canceling autoreclosing in the external autoreclosing relay, cross-tripping the SEL-T400L from the backup relay, and event recording or fault locator cross-triggering.

MIRRORED BITS Port 2 in *Figure 3.1* is connected to an SEL-2507 High-Speed Remote I/O Module, which allows contact I/O signaling to one of the following devices (see *Section 6: Settings Guidelines* for more information):

- A local relay (not compatible with MIRRORED BITS communications) with applications such as breaker failure, autoreclosing, backup protection (companion relay), or cross-triggering of relay records.
- A power line carrier set to connect to a remote SEL-T400L or other relay providing line protection with the POTT or DTT scheme.
- A teleprotection card on a SONET/SDH multiplexer to connect to a remote SEL-T400L or other relay providing line protection with the POTT or DTT scheme.

You can order SEL-2505, SEL-2506, or SEL-2507 Remote I/O Modules with fiber ports and connect them directly to the SEL-T400L. Alternatively, you can use the remote I/O modules with copper-based ports, but you must use an SEL-2814 to connect the fiber-optic ports of the SEL-T400L to the copper ports of the SEL-2505, SEL-2506, or SEL-2507.

MIRRORED BITS Port 3 in *Figure 3.1* is connected to a SONET/SDH multiplexer to reach to a remote SEL-T400L or other relay providing line protection with the POTT or DTT scheme (see *Section 6: Settings Guidelines* for more information).

Figure 3.2 shows a similar connection example, except MIRRORED BITS Port 2 is connected to an IEEE C37.94-compliant SONET/SDH multiplexer to provide digital signaling of the POTT or DTT scheme to the remote end and enables double-ended fault locating and line monitoring.

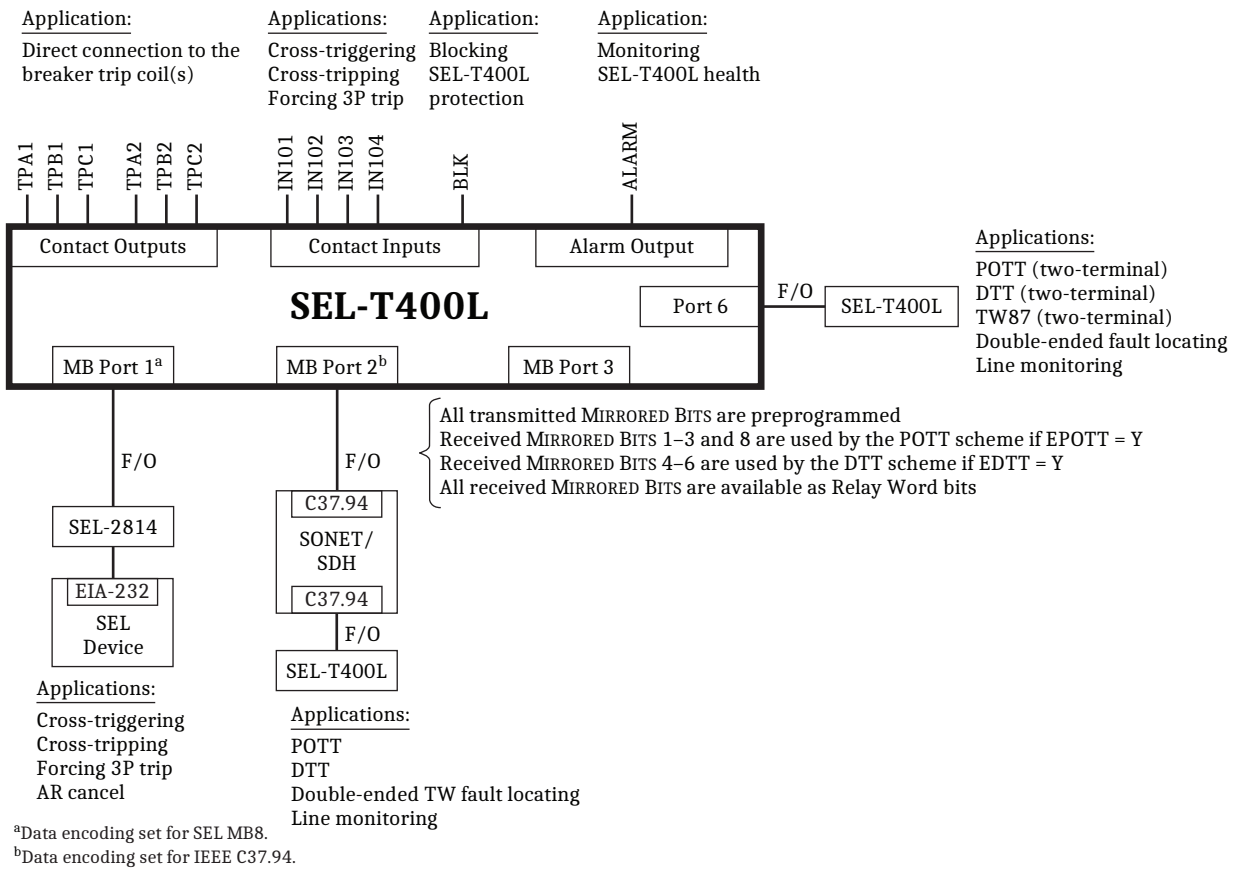

Figure 3.2 MB Port 2 Configured to Interface With an IEEE C37.94-Compliant Multiplexer for Digital Teleprotection

You can use the three MIRRORED BITS ports in any combination. For example, you can connect to three remote SEL-T400L Relays for four-terminal line protection, connect to two remote SEL-T400L Relays for three-terminal line protection and retain one MIRRORED BITS port to signal an autoreclose or breaker failure relay, or connect to one remote SEL-T400L for two-terminal line protection and retain two ports to signal local relays, digital fault recorders, etc.

Port 6 is intended for direct point-to-point fiber-optic communications and allows POTT, DTT, and TW87 applications for two-terminal lines as well as the double-ended fault locating and line monitoring. It also enables remote current and voltage metering and allows the event recorder to include remote signals in the event files. The relay sends permissive and direct trip signals on Port 6 in parallel with the permissive and direct trip signals on Ports 1, 2, and 3. You can implement a POTT or DTT application on Port 6 and use all three MIRRORED BITS ports freely; for example, you could use Port 1 as a backup POTT or DTT channel for the Port 6 fiber-optic channel and Ports 2 and 3 for connections to local relays and devices such as for two breaker failure or autoreclose devices in dual-breaker applications.

MIRRORED BITS Communications

The SEL-T400L provides three serial fiber-optic ports for POTT and DTT applications and for communicating with breaker failure and autoreclose relays. Data encoding for each port is user-configurable; select either SEL MB8 or IEEE C37.94.

Assignments of MIRRORED BITS I/O

NOTE: On a per port basis, select either SEL MB8 encoding for signaling local SEL relays and SEL I/O devices or IEEE C37.94 encoding for signaling the remote SEL-T400L over compliant multiplexers. Use SEL MB8 encoding and a media converter to interface with multiplexers not compliant with IEEE C37.94. When using SEL MB8 encoding, select the baud rate on a per port basis. When using IEEE C37.94 encoding, the data rate is 1x64 kbps. The maximum channel latency is 15 ms for POTT applications.

Consider the following when using SEL-T400L MIRRORED BITS communications:

- Transmitted MIRRORED BITS (outputs) of the SEL-T400L are not programmable. *Table 3.1* explains the meaning of each of the factory-programmed output MIRRORED BITS. MIRRORED BITS are transmitted on a given port only if that port is enabled (EPORT = Y). The relay sends the same set of MIRRORED BITS shown in *Table 3.1* on all three ports.
- If the POTT scheme is enabled on a given port (EPOTT = Y), the POTT logic in the SEL-T400L uses the received MIRRORED BITS 1, 2, and 3 as phase-segregated permissive trips and optionally MIRRORED BIT 8 if ETW32 = Y. If the POTT scheme is disabled on a given port (EPOTT = N), the POTT logic does not use received MIRRORED BITS 1, 2, 3, and 8, and you can use these bits in the SEL-T400L for any application (cross-triggering of a fault record or to force three-pole tripping, for example).
- If direct transfer tripping is enabled (EDTT = Y) for a given port, the DTT logic in the SEL-T400L uses the received MIRRORED BITS 4, 5, and 6 as phase-segregated direct trips. If EDTT = N, the DTT logic does not use received MIRRORED BITS 4, 5, and 6, and you can use these bits in the SEL-T400L for any application (cross-triggering of a fault record or to force three-pole tripping, for example).
- Received MIRRORED BIT 7 does not have any assigned functionality and you can always use it for cross-triggering of a fault record or to force three-pole tripping.
- All received MIRRORED BITS are available as Relay Word bits and you can use them as inputs in the SEL-T400L, assuming you consider the sending logic for these bits in the connected device.

Table 3.2 explains transmitted and received MIRRORED BITS in applications of the SEL-T400L with other SEL relays, such as the SEL-421, in a POTT or DTT scheme. Do not use received MIRRORED BIT 8 in relays other than the SEL-T400L.

Table 3.2 MIRRORED BITS Assignments for POTT and DTT Applications With an SEL-T400L

MIRRORED BITS[a]	Transmitted and Expected Bits for POTT	Transmitted and Expected Bits for DTT
MB1P*n*	Permissive Trip, A-phase	N/A
MB2P*n*	Permissive Trip, B-phase	N/A
MB3P*n*	Permissive Trip, C-phase	N/A
MB4P*n*	N/A	Direct Trip, A-phase
MB5P*n*	N/A	Direct Trip, B-phase
MB6P*n*	N/A	Direct Trip, C-phase
MB7P*n*	N/A	N/A
MB8P*n*	Permissive Trip, Keyed From TW32	N/A

[a] n = 1, 2, or 3.

Table 3.3 explains transmitted and received MIRRORED BITS in use of the SEL-T400L with other SEL relays, such as the SEL-451, in breaker failure protection or autoreclose control applications. For example, you can use MB7P*n* to

force three-pole tripping. Use any MIRRORED BITS as long as you set EPOTT and EDTT to N to ensure the relay does not mistake the bit you send for a POTT or DTT signal.

Table 3.3 MIRRORED BITS Assignments for Breaker Failure and Autoreclose Applications With an SEL-T400L as the Line Relay

MIRRORED BITS[a]	Breaker Failure Relay Received Bits	Autoreclose Relay	
		Received Bits	Transmitted Bits
MB1P*n*	N/A	N/A	N/A
MB2P*n*	N/A	N/A	N/A
MB3P*n*	N/A	N/A	N/A
MB4P*n*	Breaker Failure Initiate, A-phase	Autoreclose Initiate, A-phase	N/A
MB5P*n*	Breaker Failure Initiate, B-phase	Autoreclose Initiate, B-phase	N/A
MB6P*n*	Breaker Failure Initiate, C-phase	Autoreclose Initiate, C-phase	N/A
MB7P*n*	N/A	Cancel autoreclose (ARC)	Force three-pole trip (E3PT)
MB8P*n*	N/A	N/A	N/A

[a] n = 1, 2, or 3.

MIRRORED BITS Port Configuration

Table 3.4 shows settings for MIRRORED BITS Ports 1, 2, and 3.

Table 3.4 MIRRORED BITS Ports 1, 2, and 3 Settings

Name	Description	Range	Default
EPORT	Enable the port	Y, N	N
EPOTT	Enable Permissive Overreach Transfer Trip scheme on this port	Y, N	N
EDTT	Enable Direct Transfer Trip on this port	Y, N	N
ENCODING	Data Encoding on this port	MB8, C37.94	MB8
DATACLK[a]	Data Clock (I = Internal, E = External)	I, E	E
SPEED[b]	Data rate for this port	19200, 38400, 57600, 115200 bps	38400 bps
TXID	MIRRORED BITS communications Transmit identifier for this port	1–4	2
RXID	MIRRORED BITS communications Receive identifier of the device connected to this port	1–4	1

[a] Only applicable and accessible when ENCODING = C37.94.
[b] Only applicable and accessible when ENCODING = MB8.

EPORT

Use the EPORT setting corresponding to the respective port to enable (EPORT = Y) or disable (EPORT = N) MIRRORED BITS communications.

EPOTT

Use the EPOTT setting corresponding to the respective port to enable (EPOTT = Y) or disable (EPOTT = N) the POTT scheme. The SEL-T400L always sends permissive signals on all enabled MIRRORED BITS ports through use of Bits 1, 2, 3, and optionally Bit 8. Setting EPOTT = Y routes the received signals to the POTT logic. Setting EPOTT = N disconnects the received signals from the POTT logic. In either scenario, Received Bits 1, 2, 3, and 8 are available as Relay Word bits and you can use them as specified in your overall protection scheme design (to trigger event recording, for example).

EDTT

Use the EDTT setting corresponding to the respective port to enable (EDTT = Y) or disable (EDTT = N) the DTT scheme. Note that the SEL-T400L always sends direct trip signals on all enabled MIRRORED BITS ports through use of Bits 4, 5, and 6. Setting EDTT = Y routes the received signals to the DTT logic. Setting EDTT = N disconnects the received signals from the DTT logic. In either scenario, Received Bits 4, 5, and 6 are available as Relay Word bits and you can use them as specified in your overall protection scheme design (to trigger event recording, for example).

ENCODING

Use the ENCODING setting corresponding to the respective port to set the data encoding for either SEL MB8 (ENCODING = MB8) or IEEE C37.94 (ENCODING = C37.94). Select SEL MB8 encoding for signaling local SEL relays and SEL I/O devices. Select IEEE C37.94 encoding for signaling the remote SEL-T400L over compliant multiplexers. See *Typical Protection Signaling Applications on page 3.22* for examples of when the port in use should be configured for either IEEE C37.94 or SEL MB8 encoding.

DATACLK

When data encoding is set for IEEE C37.94, use the DATACLK setting corresponding to the respective port to set the timing source of the communications channel for either internal (DATACLK = I) or external (DATACLK = E). When connecting the relay to a multiplexer, set DATACLK = E in the relay to align the data transfer with the timing set by the multiplexer. For back-to-back relay connections, set DATACLK = E in one relay and DATACLK = I in the other relay. The relay with DATACLK = E aligns its data transfer with the timing set by the relay with DATACLK = I.

SPEED

When data encoding is set for SEL MB8, use the SPEED setting to match the data rate of the device connected on a given port. SEL-T400L MIRRORED BITS are transmitted at set intervals (referred to as paced mode of MIRRORED BITS operation). When possible, use the 115,200 bps data rate to accelerate protection signaling over MIRRORED BITS communications. See *Table 3.5* for MIRRORED BITS transmission intervals for different data rates.

Table 3.5 MIRRORED BITS Transmission Intervals

Encoding	Data Rate (bps)	Transmit Interval (ms)
MB8	115,200	0.50
	57,600	2
	38,400	2
	19,200	2
C37.94	64,000	0.50

TXID and RXID

Use the TXID setting to assign a unique identifier to the MIRRORED BITS messages sent on a given port. Use the RXID setting to identify the valid transmitting device for MIRRORED BITS messages received on a given port. Set RXID in one device equal to the TXID in the connected device, and vice versa. Message addressing prevents unexpected operations when two devices communicating through use of MIRRORED BITS communications are accidentally cross-connected via fiber-optic cables or in a SONET/SDH multiplexer configuration. You can override address checking by using the **LOOP** command when troubleshooting MIRRORED BITS communications (see *Loopback Testing on page 3.14* for more information).

Data Encoding

SEL MIRRORED BITS Protocol Variant (ENCODING = MB8)

NOTE: When using MIRRORED BITS communications between the SEL-T400L and SEL-400 series relays, be sure to set the SEL-400 series Relay settings to TXMODE = P (because the SEL-T400L operates only in paced mode) and STOPBIT = 2 (because the SEL-T400L supports only the MB8 format).

SEL products such as protective relays, remote I/O modules, and logic processors support several variations of the MIRRORED BITS communications protocol. When Port 1, 2, or 3 is configured for MB8 encoding, that port operates with the following MIRRORED BITS variant:

- MB8 Format. Set the connected SEL device for the MB8 format by using STOPBIT = 2.
- Paced-Mode Operation. Set the connected SEL device for paced mode by using TXMODE = P.

IEEE Standard C37.94 (ENCODING = C37.94)

The IEEE C37.94 2017 standard defines the data structure and encoding. It also defines the physical interface (ST connector, 850 nm light wavelength, 50 or 62.5 micron multimode fiber), ensuring that all IEEE C37.94-compliant relays interface with all IEEE C37.94-compliant multiplexers. When Port 1, 2, or 3 is configured for IEEE C37.94 encoding, that port is compliant with the IEEE C37.94 standard for direct relay-to-multiplexer communication.

Message Transmission and Reception

Each transmitted message contains the most recent values of the MIRRORED BITS outputs.

The relay decodes and verifies each received message of MIRRORED BITS inputs. When SEL MB8 encoding is used, the SEL-T400L requires two consecutive messages to be received and validated to assert the value of the MIRRORED BITS input (Logical 0 or 1). When IEEE C37.94 encoding is used, the SEL-T400L requires three consecutive messages to be received and validated to assert the value of the MIRRORED BITS input (Logical 0 or 1). The SEL-T400L meets the

IEC 60834-1 transmission time, bit error rate security, and bit error rate dependability recommendations for direct tripping and teleprotection applications over digital channels.

Message Decoding, Integrity Checks, and Channel Alarming

When a port is configured for MB8 encoding, the relay continuously transmits on that port an attention message containing the TXID value until it receives an attention message that includes an RXID value matching the RXID setting. If the attention message is successful, the relay has properly synchronized and it begins transmitting data.

For both encoding methods, the relay asserts Relay Word bit ROKP*n* (Receive OK on Port *n*; *n* = 1, 2, or 3) to signify normal operating conditions of MIRRORED BITS communications. ROKP*n* asserts only after the port receives a successful attention message, and after two consecutive messages exhibit none of the possible errors described in *Table 3.6*. Once the ROKP*n* bit asserts, the received bits are passed after security debounce timing, as described in *Message Transmission and Reception on page 3.9*.

Table 3.6 Error Conditions Monitored in MIRRORED BITS Communications

Error Type	Description	Encoding	
		MB8	C37.94
Parity error	Data failed UART parity check	×	
Underrun	Seven MIRRORED BITS messages transmitted without one being received	×	
Re-Sync	The MIRRORED BITS device at the other end of the link requested a resynchronization	×	
Bad Re-Sync	The transmit and receive addresses between the local and remote devices do not match	×	
Data error	Received data were not self-consistent, or the address was wrong	×	
Relay Disabled	Relay protection functions disabled as during application of relay power or a change in settings	×	×
Loop-back	Loopback test mode enabled	×	×
Framing error	The UART did not detect a stop bit	×	
	The IEEE C37.94 frame is corrupt		×
Format error	The IEEE C37.94 encoding of the payload data received was invalid		×
Loss of Signal	Two or more of the last eight consecutive frames received have framing errors		×
Yellow Path	Yellow bit of three consecutive frames received are high when there is no loss of received signal		×

With both encoding methods, if the ROKP*n* bit deasserts because of any of the errors listed in *Table 3.6*, MIRRORED BITS communications on Port *n* enters a channel fail state. While in this channel fail state, the relay forces the received MIRRORED BITS on the port to a fail-safe value of logical 0.

The relay counts the number of communications errors that have occurred on each serial fiber-optic port since the channel statistics were last cleared by the **COM P*n* C** (*n* = 1, 2, or 3) command. Use the **COM P*n*** (*n* = 1, 2, or 3) command to obtain a report of the communications errors, including the latest count

of each error condition. The report format and data depend on the encoding method for the selected port. See *MIRRORED BITS COM Report* for additional information.

MIRRORED BITS COM Report

The **COM** command (see *COMMUNICATIONS on page C.6*) provides a communications status report for MIRRORED BITS Ports 1, 2, and 3. *Figure 3.3* shows the format of the report when the selected port is configured for SEL MB8 encoding, and *Figure 3.4* shows a sample report. Similarly, *Figure 3.5* shows the format of the report when the selected port is configured for IEEE C37.94 encoding, and *Figure 3.6* shows an example. *Table 3.7* explains the individual data items reported for each encoding method and provides comments and troubleshooting guidelines. To simplify troubleshooting, use the **COM P*n* C** command to clear the COM report after each communication issue has been resolved.

```
COMMON REPORT HEADER
Summary for Port n
    Encoding MB8

Channel status
    ROKP1 = b    LBOKP1 = b

For Date and Time 1 to Date and Time 2

    Last error          xxxxxxxxxx
    Total errors              c
    Relay Disabled            c
    Data error                c
    Re-Sync                   c
    Parity error              c
    Framing error             c
    Bad Re-Sync               c
    Loop-back                 c
    Longest error(sec)    aaaaa.aaa
    Unavailability            0.xxxxxx
```

Figure 3.3 COM Report Data Items for Port Configured for SEL MB8 Encoding

```
SEL-T400L                                   Date: 2018/11/19  Time: 15:58:32.000
Station A                                   Time Source: HIRIG
                                            Serial Number: 1170231369

FID=SEL-T400L-R103-V0-Z004003-D20190215
Summary for Port 1
    Encoding MB8

Channel status
    ROKP1 = 1    LBOKP1 = 0

For 2018/11/19 15:57:40.755 to 2018/11/19 15:58:32.000

    Last error          Re-Sync
    Total errors              2
    Relay Disabled            0
    Data error                0
    Re-Sync                   2
    Parity error              0
    Framing error             0
    Bad Re-Sync               0
    Loop-back                 0
    Longest error(sec)        2.637
    Unavailability            0.076980
```

Figure 3.4 Sample COM Report for Port Configured for SEL MB8 Encoding

```
COMMON REPORT HEADER
Summary for Port n
    Encoding C37.94

Channel status
    ROKP1 = b    LBOKP1 = b    Yellow Path = b    Loss of Signal = b

For Date and Time 1 to Date and Time 2

    Last error          xxxxxxxxxx
    Total errors              c
    Relay Disabled            c
    Loss of Signal            c
    Yellow Path               c
    Framing error             c
    Format error              c
    Loop-back                 c
    Longest error(sec)    aaaaa.aaa
    Unavailability            0.xxxxxx
```

Figure 3.5 COM Report Data Items for Port Configured for IEEE C37.94 Encoding

```
SEL-T400L                                   Date: 2018/11/19  Time: 21:29:48.403
Station A                                   Time Source: HIRIG
                                            Serial Number: 1170231369

FID=SEL-T400L-R103-V0-Z004003-D20190215
Summary for Port 1
    Encoding C37.94

Channel status
    ROKP1 = 1    LBOKP1 = 0    Yellow Path = 0    Loss of Signal = 0

For 2018/11/19 21:28:14.742 to 2018/11/19 21:29:48.403

    Last error          Yellow Path
    Total errors            740
    Relay Disabled            0
    Loss of Signal           14
    Yellow Path              16
    Framing error           693
    Format error             17
    Loop-back                 0
    Longest error(sec)        8.146
    Unavailability            0.091019
```

Figure 3.6 Sample COM Report for Port Configured for IEEE C37.94 Encoding

Table 3.7 Information Included in the COM Report (Sheet 1 of 3)

Data Item	Description	Comments and Troubleshooting	Encoding	
			MB8	C37.94
Channel Status				
ROKP*n*	Status of the ROKP*n* Relay Word bit (*n* = 1, 2, or 3). When asserted, the Port *n* channel is operating normally and MIRRORED BITS are exchanged on Port *n*.	If deasserted, inspect specific errors in the COM report to troubleshoot the problem. Note that ROKP*n* deasserts when Port *n* is put in the loopback mode.	×	×
LBOKP*n*	Status of the LBOKP*n* Relay Word bit (*n* = 1, 2, or 3). When asserted, Port *n* is properly operating in a loopback (see *LOOP on page C.9* and *LOOP DATA on page C.10* for more information).	Inspect this data item to make sure you read the channel statistics for the intended loop-back operation. It is a good practice to clear the report before initiating loopback (use the **COM P*n* C** command). Use the **LOOP *n* R** command to terminate loopback.	×	×
Yellow Path	When asserted, a Yellow Path is declared, indicating that the remote device is not receiving valid data. This occurs when three consecutive received frames have the "Yellow" bit = 1 and the received signal is OK (no loss of signal)	Check the transmit fiber path from the relay to the remote device.		×

Table 3.7 Information Included in the COM Report (Sheet 2 of 3)

Data Item	Description	Comments and Troubleshooting	Encoding	
			MB8	C37.94
Loss of Signal	When asserted, a loss of signal is declared, indicating a failure on the receive path of the communications channel.	Check the receive fiber path from the remote device to the relay.		×
Channel Statistics				
Date and Time 1 and Date and Time 2	The report shows channel statistics beginning on Date and Time 1 (the time the report was last cleared) and ending on Date and Time 2 (the time the **COM** command was issued).	Make sure you analyze the channel statistics for the intended time period. Use this date and time information to correlate channel problems with any activities in the two substations or any work on your fiber patch panels and cables. It is a good practice to clear the statistics after troubleshooting the relay or the channel (use the **COM P*n* C** command).	×	×
Last error	This item lists the type of last error detected (Relay Disabled, Data error, Re-Sync, Parity error, Loss of Signal, Yellow Path, Framing error, Bad Re-Sync, Format error) described below.	Refer to the error type troubleshooting recommendations earlier in this table to troubleshoot the MIRRORED BITS channel.	×	×
Total errors	This counter tallies total communications errors (Relay Disabled, Data error, Re-Sync, Parity error, Loss of Signal, Yellow Path, Framing error, Bad Re-Sync, Format error) described below.	Use this measurement as a proxy of channel quality. Compare with historical values for this channel or typical values for this channel type in your organization (making measurements on a per 24-hour basis, for example).	×	×
Relay Disabled	This counter tallies the instances that the relay has been disabled (i.e., unable to send or receive MIRRORED BITS data) as indicated by deassertion of the EN Relay Word bit. Losses of communication during the relay disabled periods do not impact the channel unavailability calculations.	A high count can indicate that the relay is going in and out of service. Reasons for the relay going out of service include settings changes or loss of power. Issue the **STA** command for more information as to the reason for the relay going out of service.	×	×
Data error	This counter represents the number of times the MIRRORED BITS message has not conformed to MIRRORED BITS message format or the channel timed out.	Data errors occur if the MIRRORED BITS channel experiences data corruption. Check fiber-optic cables, connections, media converters, and SONET/SDH configuration.	×	
Re-Sync	This counter represents the number of resynchronization messages the local device receives from the remote device.	A resynchronization condition occurs when the remote device has lost synchronization with the local device and has sent a synchronization message. Inspect the remote device for errors that led to loss of synchronization with the local device.	×	
Parity error	This counter represents the number of times the calculated parity has not matched the parity bit in the received message.	Parity errors occur if the data rates between the local and remote devices do not match. Ensure matching of the data rates between the local and remote devices. The parity error counter may also increase if the channel is introducing errors. Check fiber-optic cables, connections, media converters, and SONET/SDH configuration.	×	
Loss of Signal	This counter represents the number of times a loss-of-signal condition has been declared.	Check fiber connections. If the current loss-of-signal status is 0 but the counter is nonzero, this could indicate an intermittent receive channel failure.		×

Table 3.7 Information Included in the COM Report (Sheet 3 of 3)

Data Item	Description	Comments and Troubleshooting	Encoding	
			MB8	C37.94
Yellow Path	This counter represents the number of times a yellow-path condition has been declared.	Check fiber connections. If the current yellow-path status is 0 but the counter is non-zero, this could indicate intermittent channel issues.		×
Framing error	This counter represents the number of invalid "start" or "stop" bits.	Framing errors occur if the data rates between the local and remote devices do not match. Ensure matching of the data rates between the local and remote devices. The parity error counter may also increase if the channel is introducing errors. Check fiber-optic cables, connections, media converters, and SONET/SDH configuration.	×	
	This counter tallies the number of packets with IEEE C37.94 frame errors.	This could be caused by intermittent issues with the receive fiber connection, or it may indicate a failing network interface module.		×
Bad Re-Sync	This counter represents the number of invalid resynchronization messages the local device received.	A Bad Re-Sync message occurs when the transmit and receive addresses between the local and remote devices do not match. Check the transmit and receive address settings.	×	
Format error	This counter tallies the number of packets containing corrupt data.	If there is an intermittent failure, expect this counter to be a large number. If so, check the fiber connections and channel interface. If there is a permanent failure, the counter will likely be low because the channel will have failed.		×
Loop-back	This counter indicates how many times loopback mode has been initiated.	Inspect this data item to correlate any large channel errors with loopback testing procedures. It is a good practice to clear the report before initiating loopback (use the **COM P*n* C** command). Use the **LOOP *n* R** command to terminate loopback.	×	×
Longest error (sec)	Duration of the longest error.	Use this measurement to better understand the unavailability calculations and distinguish between sporadic but repetitive loss of communication and longer-term channel outages.	×	×
Unavailability	Channel unavailability (as indicated by ROKP*n* being deasserted) in per unit of the total time. For example, unavailability of 0.01 means the channel was available 99 percent of the time during the report period. Losses of communication during the relay disabled periods do not impact the channel unavailability calculations.	Use this measurement to evaluate channel availability. Compare with historical values for this channel or typical values for this channel type in your organization. Compare with the formal specification you issued to your channel provider.	×	×

Loopback Testing

Loopback testing is a commonly used method for troubleshooting digital signaling channels. In order to isolate the problem, you may loop back the communications link by connecting the transmit output to the receive input at various points in the communications path between the two communicating devices. If the equipment is healthy and configured properly, the relay will receive its own data and show no errors. If you see errors for a given loopback location, you know where the problem is. By examining communications errors, you can identify the

nature of the problem as well. For example, you can troubleshoot a MIRRORED BITS SONET/SDH connection between two SEL-T400L Relays by performing a loopback test while gradually moving the loopback position away from the relay (loop back the relay port, loop back the fiber-optic cable at the SEL-2814 Transceiver, command a loopback in the local SONET/SDH multiplexer, command a loopback in the remote SONET/SDH multiplexer, and so on).

When you apply a loopback in a MIRRORED BITS channel, the SEL-T400L rejects the data based on the transmit and receive addresses (TXID and RXID settings). To perform a meaningful loopback test, put the MIRRORED BITS port in a loopback test mode prior to looping back the communications link. You can use one of two loopback test modes:

- Initiate loopback test mode via the **LOOP *n*** (*n* = 1, 2, or 3) command to allow the relay to receive its own data while keeping the received MIRRORED BITS on Port *n* at the fail-safe value of logical 0.
- Initiate loopback test mode via the **LOOP DATA *n*** (*n* = 1, 2, or 3) command to allow the relay to receive its own data while processing received MIRRORED BITS on Port *n*.

By default, the **LOOP** command enables loopback test mode with a 5-minute time-out. You can initiate the test for a longer duration by specifying the time-out period as a command attribute. For example, initiate a loopback on Port 2 for 30 minutes by issuing the **LOOP 2 30** command. Use **LOOP R** to terminate the loopback test mode before it times out on its own. See *Appendix C: SEL ASCII Commands* for more information on the **LOOP** command.

In loopback test mode, the ROKP*n* Relay Word bit deasserts and the relay uses the LBOKP*n* Relay Word bit to indicate whether the data transmissions are satisfactory. LBOKP*n* is driven by logic identical to that of ROKP*n*. In the loopback mode, the relay collects communications port statistics for Ports 1, 2, and 3. Inspect LBOKP*n* and the received Relay Word bits (RMB1P*n* through RMB8P*n*) as well as the COM report when troubleshooting MIRRORED BITS communications on Port *n* (use **COM P*n*** command to obtain the port statistics. *Figure 3.7* shows an example COM report for Port 1 when loopback test mode is enabled and encoding is set to SEL MB8.

```
=>>COM P1 <Enter>

SEL-T400L                                   Date: 2018/11/19  Time: 19:46:56.880
Station A                                   Time Source: HIRIG
                                            Serial Number: 1170231369

FID=SEL-T400L-R103-V0-Z004003-D20190215
Summary for Port 1
    Encoding MB8

Channel status
   ROKP1 = 0    LBOKP1 = 1

For 2018/11/19 19:46:14.756 to 2018/11/19 19:46:56.880

    Last error          Re-Sync
    Total errors              2
    Relay Disabled            0
    Data error                1
    Re-Sync                   1
    Parity error              0
    Framing error             0
    Bad Re-Sync               0
    Loop-back                 1
    Longest error(sec)       26.487
    Unavailability            0.654509
```

Figure 3.7 Sample COM Report for a MIRRORED BITS Channel on Port 1 During a Loopback Test With Encoding Set to SEL MB8

Figure 3.8 shows an example of the COM report for Port 1 when loopback test mode is enabled and encoding is set to IEEE C37.94.

```
=>>COM P1 <Enter>

SEL-T400L                                    Date: 2018/11/19  Time: 23:50:49.196
Station A                                    Time Source: HIRIG
                                             Serial Number: 1170231369

FID=SEL-T400L-R103-V0-Z004003-D20190215
Summary for Port 1
    Encoding C37.94

Channel status
   ROKP1 = 0    LBOKP1 = 1    Yellow Path = 0    Loss of Signal = 0

For 2018/11/19 23:49:57.314 to 2018/11/19 23:50:49.196

    Last error          Framing error
    Total errors           1968
    Relay Disabled            0
    Loss of Signal           26
    Yellow Path              14
    Framing error          1892
    Format error             36
    Loop-back                 1
    Longest error(sec)       19.970
    Unavailability            0.560414
```

Figure 3.8 Sample COM Report for a MIRRORED BITS Channel on Port 1 During a Loopback Test With Encoding Set to IEEE C37.94

Configuring an SEL-T400L and SEL-2507 MIRRORED BITS Connection

Use an ST-terminated fiber cable to make a direct connection between the SEL-T400L and the SEL-2507.

Configure the connection through use of Port settings on the SEL-T400L and via settings controlled by rear-panel control (DIP) switches on the SEL-2507. Ensure the SEL-T400L port is configured for SEL MB8 data encoding by setting ENCODING = MB8. *Table 3.8* shows the suggested SEL-T400L and SEL-2507 settings. For example, to communicate at 115200 bps with an SEL-T400L configured for RXID = 1 and TXID = 3, you need to set the SEL-2507 control (DIP) switches as follows: 0001****11.

Table 3.8 Suggested Settings for SEL-T400L and SEL-2507 MIRRORED BITS Communications (Sheet 1 of 2)

SEL-T400L Port Settings		SEL-2507 Control (DIP) Switches[a]
Name	Value	
EPORT	Y	Not applicable
EPOTT	Application-specific	
EDTT	Application-specific	
ENCODING	MB8	
SPEED (bps)	115200	********11
	57600	Not supported
	38400	********00
	19200	********10
TXID	1	**00******
	2	**10******
	3	**01******
	4	**11******

Table 3.8 Suggested Settings for SEL-T400L and SEL-2507 Mirrored Bits Communications (Sheet 2 of 2)

SEL-T400L Port Settings		SEL-2507 Control (DIP) Switches[a]
Name	Value	
RXID	1	00********
	2	10********
	3	01********
	4	11********

[a] 0 means OFF (upper switch position); 1 means ON (lower switch position).

Refer to the *SEL-2507 High-Speed Remote I/O Module Instruction Manual*, available at selinc.com, for more information about the SEL-2507.

Connection Diagrams for Mirrored Bits I/O

Refer to *Section 10: Installation* for more information about connecting Mirrored Bits ports and remote I/O module inputs and outputs for various applications including SONET/SDH multiplexed channels, power line carrier channels, analog teleprotection cards on SONET/SDH multiplexers, and connections to local relays.

Direct Point-to-Point Fiber-Optic Channel

The direct point-to-point fiber-optic channel on Port 6 is a dedicated connection between two SEL-T400L Relays for the TW87 protection scheme, double-ended fault locating, line monitoring, two-terminal POTT and DTT applications, and remote metering and fault recording. You cannot connect any other device to Port 6 but the SEL-T400L (preferably running the same firmware revision). For testing and troubleshooting purposes, the relay allows you access to remote metering data when the direct point-to-point channel is used. Remote voltages and currents are included in the event record as well.

Port 6 Configuration

Table 3.9 shows Port 6 settings.

Table 3.9 Port 6 Settings

Name	Description	Range	Default
EPORT	Enable Port 6	Y, N	N
EPOTT	Enable a POTT scheme between two relays (two-terminal POTT application only)	Y, N	N
EDTT	Enable a DTT scheme between two relays (two-terminal DTT application only)	Y, N	N
87TADR	Transmit address	1–255	1
87RADR	Receive address	1–255	2

EPORT

Use the EPORT setting to enable (EPORT = Y) or disable (EPORT = N) communications on Port 6. Port 6 supports the TW87 traveling-wave differential protection scheme, two-terminal POTT and DTT protection schemes, double-ended fault locating, remote metering, and event recording.

EPOTT

Use the EPOTT setting to enable (EPOTT = Y) or disable (EPOTT = N) the POTT scheme on Port 6. Set EPOTT6 = Y only for two-terminal applications using Port 6 as a primary channel or as a backup channel to one of the MIRRORED BITS channels. You must set EPOTT6 = N in three- and four-terminal applications.

EDTT

Use the EDTT setting to enable (EDTT = Y) or disable (EDTT = N) the DTT scheme on Port 6. Set EDTT = Y only for two-terminal applications using Port 6 as a primary channel or as a backup channel to one of the MIRRORED BITS channels.

87TADR and 87RADR

Use the 87TADR setting to assign a unique identifier to the messages sent on Port 6. Use the 87RADR setting to identify the correct remote SEL-T400L. Set 87RADR equal to the 87TADR in the remote SEL-T400L, and vice versa. Message addressing prevents unexpected operations when two SEL-T400L Relays are accidentally cross-connected such as at fiber patch panels during testing.

Loopback Testing

NOTE: Remember to restore the 87TADR and 87RADR settings to their intended values after performing the loopback test.

You can use loopback mode to test the cables, fiber patch panels, and the long-haul fiber-optic cable and amplifiers (if any) between two SEL-T400L Relays. For example, you can connect the RX fiber and the TX fiber at the local patch panel to check the local relay port and the cabling between the relay and the patch panel. Normally, the relay rejects received data based on the mismatch between the 87TADR and 87RADR addresses. You can force the relay to start receiving its own data by temporarily setting 87TADR = 87RADR.

Selecting Port 6 SFP Transceivers

Use *Table 3.11* to select transceivers appropriate for your application. Distances shown in *Table 3.11* are best-case numbers provided by the SFP module manufacturer. Actual distance is typically lower and depends on fiber-optic link attenuation properties. *Table 3.10* shows a link budget calculation example for a 150 km, high-quality, single-mode fiber-optic link.

Table 3.10 Fiber-Optic System Loss Calculation for a 150 km Link

Item	Typical Value	Loss Calculation	Loss Budget
Cable Attenuation	0.22 dB/km	0.22 dB/km • 150 km	33 dB
Splice Loss	0.05 dB, every 6 km	150/6 km • 0.05 dB	1.25 dB
Connector Loss	0.5 dB per connector	4 • 0.5 dB	2 dB
Link Margin	3 dB	3 dB	3 dB
Maintenance and Repair Margin	1 dB/100 km	150/100 km • 1 dB	1.5 dB
		Total	40.75 dB

The example excludes microbend losses, dispersion, end-of-life margin, and other sources of losses or margins that are often standardized and used by your telecommunications department. Link-loss calculations similar to the example shown in *Table 3.10* are appropriate in the early planning stage, but these do not replace actual measurements performed on the installed fiber-optic system. It is highly advisable to coordinate closely with telecommunications personnel when selecting SEL-T400L transceivers for application with a direct point-to-point fiber-optic channel.

Follow these best practices when deploying long-distance fiber-optic links:

- Use high-quality fiber-optic cable with attenuation below 0.22 dB/km at 1550 nm and 0.35 dB/km at 1310 nm.
- Minimize the number of connectors and ensure their cleanliness.
- Use fusion splices and keep average splice loss to less than 0.05 dB at 1550 nm. Rework all splices with attenuation exceeding 0.1 dB.
- Leave a margin for aging, lifetime maintenance, and link repairs. One to two decibels per 100 km is usually sufficient.
- Provide a patch panel between the long-distance cable and the relay to facilitate testing and troubleshooting, isolation, and temporary configurations.

Obtain additional information about fiber-optic link budget calculations from SEL Application Guides AG2014-33 and AG2014-04 and Application Note AN2012-02 (available at selinc.com).

Table 3.11 Port 6 Transceivers Distance and Recommended Cable Type

Transceiver Part Number	Standard	Fiber	Max. Distance	Wavelength	Link Budget
8131-01	1000BASE-SX	MMF[a]	300 m (62.5/125 µm) 550 m (50/125 µm)	850 nm	9 dB
8130-01	1000BASE-LX	SMF[b]	10 km	1310 nm	11.5 dB
8130-02	1000BASE-LX	SMF	20 km	1310 nm	16 dB
8130-03	1000BASE-LX	SMF	30 km	1310 nm	19 dB
8130-04	1000BASE-LX	SMF	40 km	1310 nm	22 dB
8130-05	1000BASE-XD	SMF	50 km	1550 nm	19 dB
8130-06	1000BASE-ZX	SMF	80 km	1550 nm	24 dB
8130-08	1000BASE-ZX	SMF	160 km	1550 nm	37 dB
8130-10	1000BASE-ZX	SMF	200 km	1550 nm	41 dB

[a] MMF = multimode fiber.
[b] SMF = single-mode fiber.

COM TW87 Report

The **COM TW87** command (see *COM TW87 on page C.6*) provides a report for the point-to-point fiber-optic channel on Port 6. *Figure 3.9* shows the format of the report, and *Figure 3.10* shows a sample report. *Table 3.12* explains the individual data items and provides comments and troubleshooting guidelines.

```
COMMON REPORT HEADER
Summary for Port 6 protection channel

Port 6 SFP
    SFP information
    Temperature            xx.x C
    Tx Power               x.xxxx mW
    Rx Power               x.xxxx mW
    MAC Address            xx-xx-xx-xx-xx-xx

Transmit Address Setting   87TADR
Receive Address Setting    87RADR
Protocol version           xxx

Channel status
   TW87OK = b      LINK6 = b


For Date and Time 1 to Date and Time 2

   Link Delay              xxxxx.xx us
   Frames Sent             xxxxxxx
   Frames Received         xxxxxxx
   Frames Corrupted        xxxxxxx
   Max SFP Temp            xx.x C
   Max SFP Temp Date       yyyy/mm/dd
   Max SFP Temp Time       hh:mm:ss
   Min Rx Power            x.xxxx mW
   Min Rx Power Date       yyyy/mm/dd
   Min Rx Power Time       hh:mm:ss
```

Figure 3.9 Data Items in the COM TW87 Report

```
SEL-T400L                                   Date: 2017/03/04  Time: 17:15:55.129
Station A                                   Time Source: HIRIG
                                            Serial Number: 1170231369

FID=SEL-T400L-R100-V0-Z001001-D20170321     CID=FB54
Summary for Port 6 protection channel


Port 6 SFP
    1000BASE-SX (850nm, 300/550m)
    Temperature            35.0 C
    Tx Power               0.3126 mW
    Rx Power               0.3289 mW
    MAC Address            00-30-A7-5C-C7-B0

Transmit Address Setting   1
Receive Address Setting    2
Protocol version           0

Channel status
   TW87OK = 1      LINK6 = 1


For 2017/03/04 04:50:05 to 2017/03/04 17:15:55

   Link Delay              0.02 us
   Frames Sent             7968131
   Frames Received         7968131
   Frames Corrupted        0
   Max SFP Temp            35.1 C
   Max SFP Temp Date       2017/03/04
   Max SFP Temp Time       17:15:18
   Min Rx Power            0.3281 mW
   Min Rx Power Date       2017/03/04
   Min Rx Power Time       17:13:06
```

Figure 3.10 Sample COM TW87 Report

Table 3.12 Information Included in the COM TW87 Report (Sheet 1 of 2)

Data Item	Description	Comments and Troubleshooting
SFP information	Specification of the transceiver installed in Port 6.	Verify that the installed transceiver meets the wavelength and power budget requirements of your application. A transceiver not suitable for your application may cause loss of packets or a loss of communication.
Temperature	Present value of the transceiver temperature in degrees Celsius as provided by the internal diagnostics of the SFP transceiver.	Transceiver operating temperature higher than 85°C may indicate a transceiver failure. Compare with the internal chassis temperature reported in the **STA** report to differentiate between local transceiver heating and a high device operating temperature.
Tx Power	Present value of the transceiver transmit power as provided by the internal diagnostics of the SFP transceiver.	Compare this reading with the *Rx Power* at the remote relay to calculate channel losses for the fiber-optic cabling from the local relay to the remote relay. Power levels reported by the SFP are approximate. For accurate path evaluation, use purpose-built fiber-optic measurement instruments.
Rx Power	Present value of the transceiver received power as provided by the internal diagnostics of the SFP transceiver.	Compare this reading with the *Tx Power* at the remote relay to calculate channel losses for the fiber-optic cabling from the remote relay to the local relay.
MAC Address	Factory-assigned Media Access Control (MAC) address of the Port 6 transceiver.	Use this address as a unique identifier of the specific transceiver installed.
Transmit Address Setting	87TADR setting; identifying the local relay to the receiving remote relay.	Ensure that 87TADR and 87RADR match in the local and remote relays. If so, and the local relay still rejects data, ensure that the local relay is not unintentionally cross-connected to a remote SEL-T400L not meant for use in your application. Inspect fiber patch panels for unintentional cross-connection.
Receive Address Setting	87RADR setting; identifying the remote relay to the receiving local relay.	
Protocol Version	Port 6 protocol has an assigned version number to allow for possible addition of new data items or to change existing data items in the Port 6 packets.	Ensure the local and remote relays use the same protocol version (inspect the **COM TW87** report at the remote relay). It is a good practice to use the same firmware revision at both relays in the TW87 scheme. Using the same firmware revision ensures protocol version compatibility.
Warning: Discarding TW87 messages (Receive Address Setting or Protocol Version mismatch)	This warning appears if the relay permanently rejects packets based on a wrong address (i.e., the 87RADR setting does not match the address in the packet) or incompatible protocol.	Inspect the 87TADR and 87RADR settings in both relays. Correct the settings and check for accidental cross-connection. Inspect protocol versions at both relays and upgrade firmware to ensure protocol compatibility.
TW87OK	Status of the TW87OK Relay Word bit. Signifies that the channel is operational and the two relays are time-synchronized.	Expect the TW87OK bit to be asserted. If TW87OK is deasserted, data are not being received correctly at either the local or remote relay. Troubleshoot the data reception through use of the other items from the **COM TW87** report.
LINK6	Status of the LINK6 Relay Word bit. Signifies that the transceiver in Port 6 has a valid link signal.	Inspect the lost frame counts to troubleshoot this condition.
Date and Time 1 and Date and Time 2	The following part of the report shows channel statistics for the time period beginning on Date and Time 1 (the time the report was last cleared) and ending on Date and Time 2 (the time the **COM TW87** command was issued).	Analyze channel statistics for the intended time period. Use this information to correlate channel problems with any activities in the two substations or with any work on your fiber patch panels and cables. It is a good practice to clear the statistics after troubleshooting the relay or the channel (use the **COM TW87 C/R** command).

Table 3.12 Information Included in the COM TW87 Report (Sheet 2 of 2)

Data Item	Description	Comments and Troubleshooting
Link Delay	One-way link delay in microseconds at the time the command was issued (Date and Time 2).	If you encounter issues transmitting or receiving data, verify that this measurement is reasonable. Divide your channel length by the speed of light in fiber to obtain the one-way channel time. Expect the speed of light in fiber to be about 70 percent of the speed of light in free space. If the link delay measurement is not as expected, check whether your relays are connected through use of the correct long-haul cable. Link delay readings incongruent with the fiber-optic cable length suggest that there may be a relay cross-connection issue or a relay failure.
Frames Sent	This counter tallies frames sent on Port 6 during the report time period. The relay sends data frames on Port 6 every 25 microseconds (i.e., 40,000 frames per second). This counter stops at 9,999,999 (i.e., in about 250 seconds), at which point $$$$$$$ is displayed.	The counter increases regardless of channel connectivity (i.e., the local relay continues to send frames regardless of whether it receives any from the remote relay). Lack of increase in the counter may indicate failure of the local relay.
Frames Received	This counter tallies frames received on Port 6 during the report time period. The relay expects data frames on Port 6 every 25 microseconds (i.e., 40,000 frames per second). This counter stops at 9,999,999 (i.e., in about 250 seconds), at which point $$$$$$$ is displayed.	Compare frames received with frames sent and calculate the momentary channel unavailability as 1 – (Frames Received / Frames Sent). Low unavailability points toward sporadic data corruption or a marginal power budget. High unavailability points toward a systemic issue, such as a total loss of communication.
Frames Corrupted	This counter tallies frames on Port 6 that failed the data integrity check (CRC) or have incorrect Ethertype or VLAN fields during the report time period. The relay expects data frames on Port 6 every 25 microseconds (i.e., 40,000 frames per second). This counter stops at 9,999,999 (i.e., in about 250 seconds, assuming every frame is corrupt and therefore tallied), at which point $$$$$$$ is displayed.	A high count of corrupted frames indicates a marginal power budget, problems with fiber cables, problems with optical amplifiers (if present), accidental connection to an Ethernet network (wrong Ethertype or VLAN tags), or relay hardware problems.
Max SFP Temp	Maximum SFP temperature in the report time period.	A transceiver operating temperature higher than 85°C may indicate a transceiver failure.
Max SFP Temp Date and Time	Date and time of the maximum SFP temperature.	Correlate this date and time with any failures in the two substations or the long-haul fiber cable.
Min Rx Power	Minimum receive power in the report time period.	Low receive power can indicate problems with the remote relay or the fiber channel.
Min Rx Power Date and Time	Date and time of the minimum receive power.	Correlate this date and time with any failures in the two substations or the long-haul fiber cable.

Typical Protection Signaling Applications

Figure 3.11 shows a recommended two-terminal SEL-T400L protection application with a digital teleprotection channel for the POTT and DTT schemes over TDM (SONET/SDH), with a standalone breaker failure or autoreclose relay (such as an SEL-421) compatible with MIRRORED BITS communications. Connect MIRRORED BITS Port 1 directly to the IEEE C37.94-compliant multiplexer. The two SEL-T400L Relays in *Figure 3.11* exchange permissive and direct trips (PT and DT, respectively) over the SONET/SDH network. Use an SEL-2814 to connect the fiber-optic MIRRORED BITS Port 3 to an electrical input of an SEL breaker failure and autoreclose relay. Program the SEL-421 to interpret the direct trip signals that the SEL-T400L sends as breaker failure initiate (BFI) or autoreclose initiate (ARI) signals. Consider programming the

SEL-T400L to trigger an event record whenever the breaker failure element in the SEL-421 operates. Use a MIRRORED BIT to cross-trigger the SEL-T400L event recording.

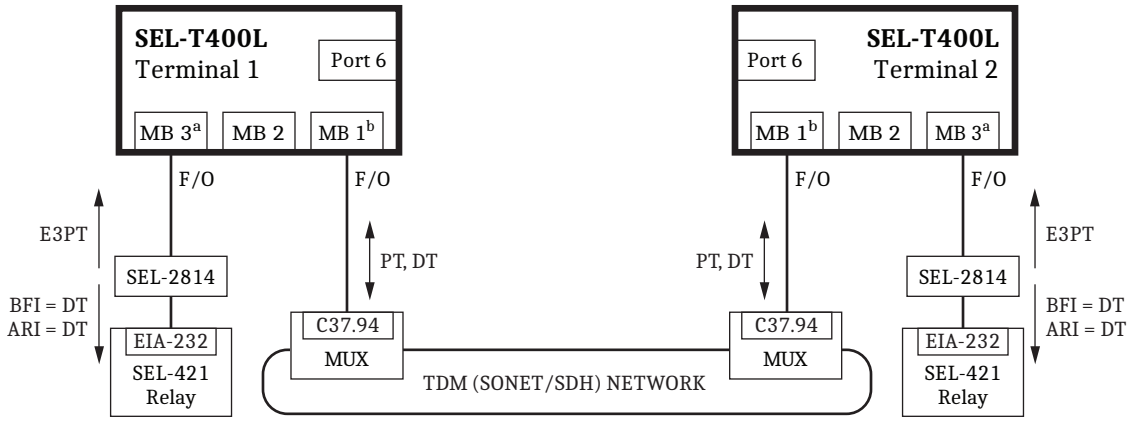

[a]Data encoding set for SEL MB8.
[b]Data encoding set for IEEE C37.94.

Figure 3.11 Two-Terminal SEL-T400L Application With an IEEE C37.94-Compatible POTT/DTT Channel, Standalone SEL Breaker Failure and Autoreclose Relay, and No Direct Point-to-Point Fiber-Optic Channel

Figure 3.12 shows a two-terminal SEL-T400L protection application with an I/O-based teleprotection channel (such as a power line carrier, point-to-point microwave, or I/O teleprotection card on a TDM multiplexer) for the POTT and DTT schemes and a standalone breaker failure and autoreclose relay that is not compatible with MIRRORED BITS communications. Use a remote I/O module to convert MIRRORED BITS to contact inputs and outputs. Wire the permissive trip and direct trip signals to your I/O-based channel equipment. Wire the direct trip signals to your breaker failure and autoreclosing relay and program the relay to interpret the direct trip signals as ARI and BFI signals. If you use a standalone digital fault recorder (DFR), you may wire the direct trip output from the remote I/O module to the DFR and configure the DFR to use the direct trip output as a trigger.

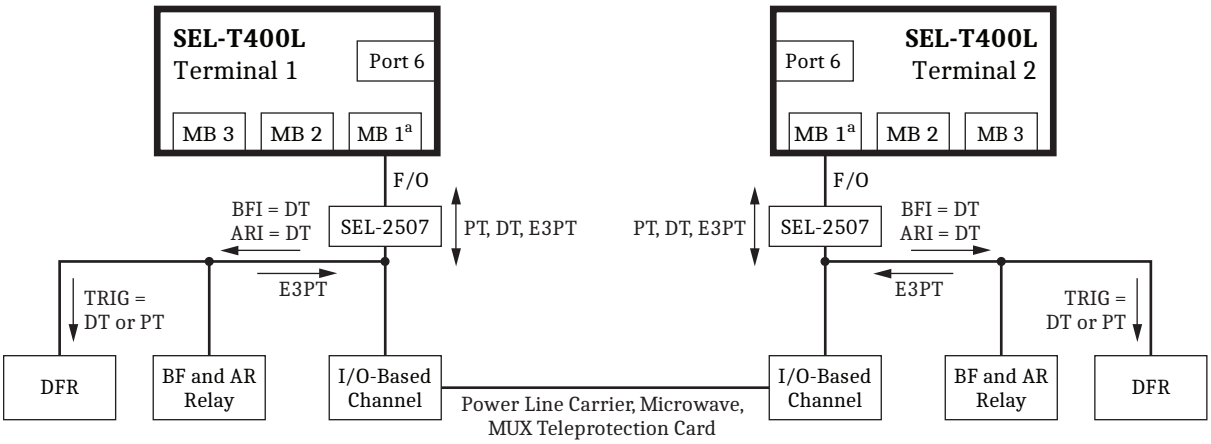

[a]Data encoding set for SEL MB8.

Figure 3.12 Two-Terminal SEL-T400L Application With a Contact I/O-Based POTT/DTT Channel, Standalone Breaker Failure and Autoreclose Relay, and No Direct Point-to-Point Fiber-Optic Channel

Figure 3.13 shows a two-terminal SEL-T400L protection application with a direct point-to-point fiber-optic channel for the TW87, POTT, and DTT schemes, as well as a companion relay (an SEL-421 in this example) compatible with

MIRRORED BITS communications. The companion relay integrates phasor-based dependable line protection, breaker failure protection, and autoreclosing. Use an SEL-2814 to connect the fiber-optic Port 3 of the SEL-T400L to an electrical port on the SEL-421. Program the companion relay (the SEL-421 in this example) to interpret the direct trip signals as BFI and ARI signals. Consider enabling DTT on Port 3 and allowing the SEL-421 backup protection to operate the SEL-T400L trip outputs.

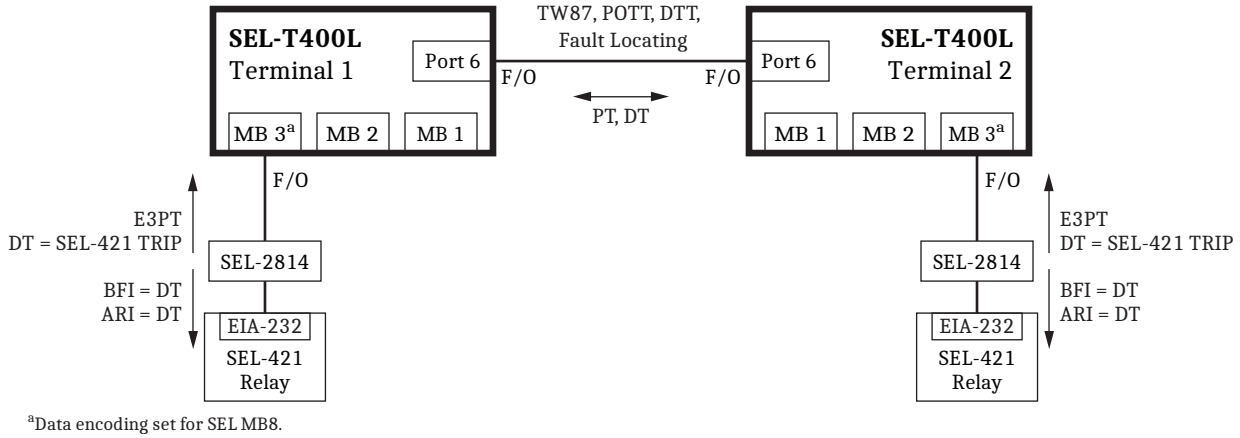

[a]Data encoding set for SEL MB8.

Figure 3.13 Two-Terminal SEL-T400L Application With a Direct Point-to-Point Fiber-Optic TW87/POTT/DTT Channel and an SEL Backup, Breaker Failure, and Autoreclose Relay

Figure 3.14 shows a recommended three-terminal SEL-T400L protection application with a digital teleprotection channel for POTT and DTT schemes over TDM (SONET/SDH), a standalone breaker failure and autoreclose relay compatible with MIRRORED BITS communications (an SEL-421 in this example), and a direct point-to-point fiber-optic channel between Terminals 1 and 3 for a partial TW87 scheme and double-ended fault locating. Use SEL-2814 transceivers to connect the fiber-optic MIRRORED BITS Ports 1 and 2 to an electrical input of the multiplexer. The three SEL-T400L Relays in *Figure 3.14* exchange permissive and direct trips over the SONET/SDH network. Program the SONET/SDH network to connect each pair of SEL-T400L Relays on a point-to-point basis (1–2, 2–3, and 3–1 connections). Make sure to set EPOTT6 = N for Relays 1 and 3. Use an SEL-2814 to connect the fiber-optic MIRRORED BITS Port 3 to an electrical input of the SEL breaker failure and autoreclose relay. Program the SEL-421 to interpret the direct trip signals the SEL-T400L sends as ARI or BFI signals in the SEL-421 logic. Consider programming the SEL-T400L to trigger an event record whenever the breaker failure element in the SEL-421 operates. Use a MIRRORED BIT to cross-trigger SEL-T400L event recording.

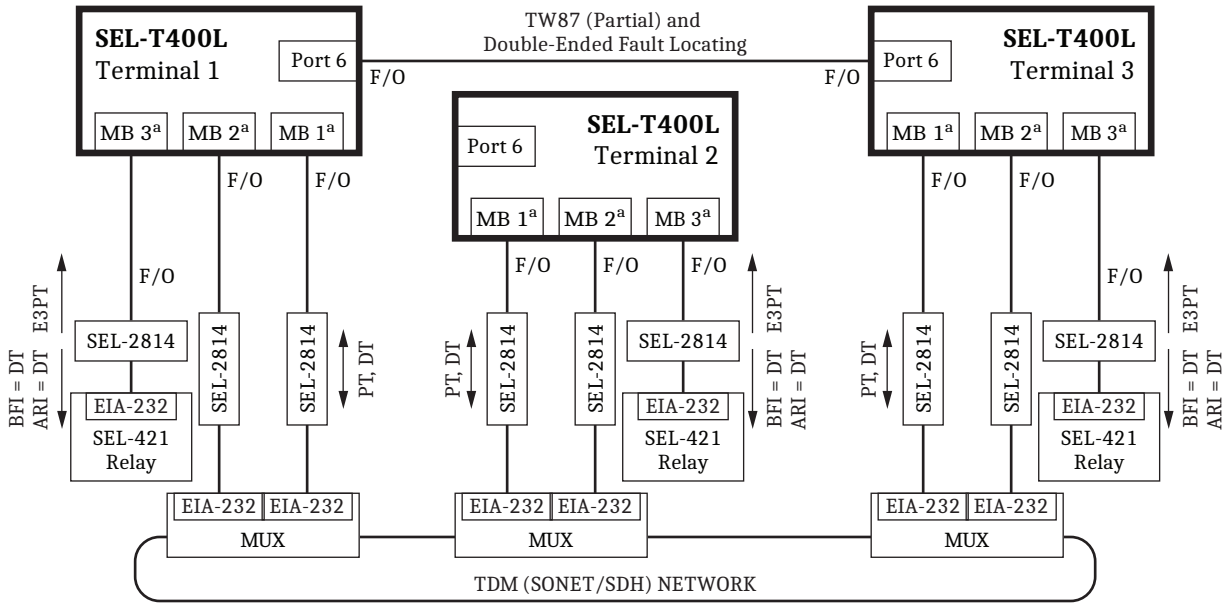

[a]Data encoding set for SEL MB8.

Figure 3.14 Three-Terminal SEL-T400L Application With a TDM POTT/DTT Channel, Standalone SEL Breaker Failure and Autoreclose Relay, and a Direct Point-to-Point Fiber-Optic Channel Between Terminals 1 and 3

Figure 3.15 shows a single-breaker application with a companion relay (such as an SEL-421) providing breaker failure protection, autoreclosing, and phasor-based dependable protection. Use spare trip outputs of the SEL-T400L for BFI and ARI; for example, if TPA1, TPB1, and TPC1 are being used for tripping the breaker, use TPA2, TPB2, and TPC2 for BFI and ARI. Use one of the programmable SEL-T400L inputs (IN101 to IN104) to allow the SEL-421 autorecloser to force three-pole tripping (E3PT) in the SEL-T400L as per standard single-pole tripping and reclosing practice. Consider using other SEL-T400L inputs to allow the companion relay to cross-trip the SEL-T400L outputs.

Figure 3.16 shows a dual-breaker, three-pole tripping application with two standalone breaker failure and autoreclosing relays (such as SEL-451 Relays). Use TPA1 and TPA2 for tripping the breakers, and TPC1 and TPC2 for BFI and ARI for CB1 and CB2, respectively.

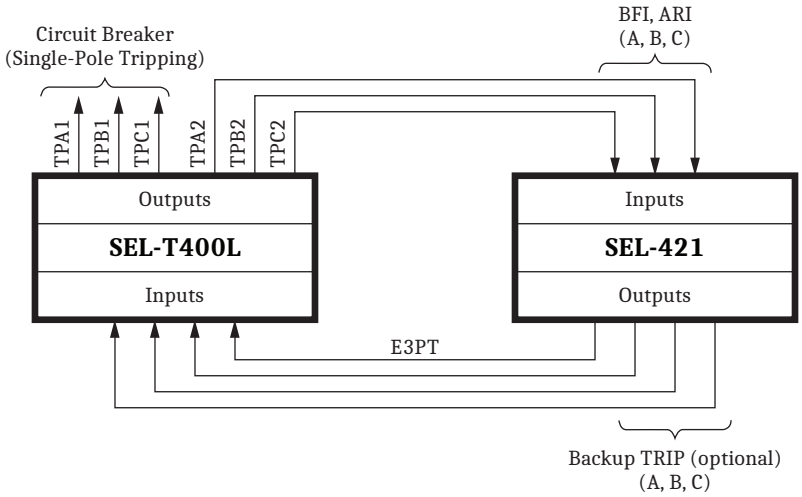

Figure 3.15 Breaker Failure Protection, Autoreclosing, and Backup Protection Application With Spare SEL-T400L Outputs (Single-Breaker, Single-Pole Tripping Example)

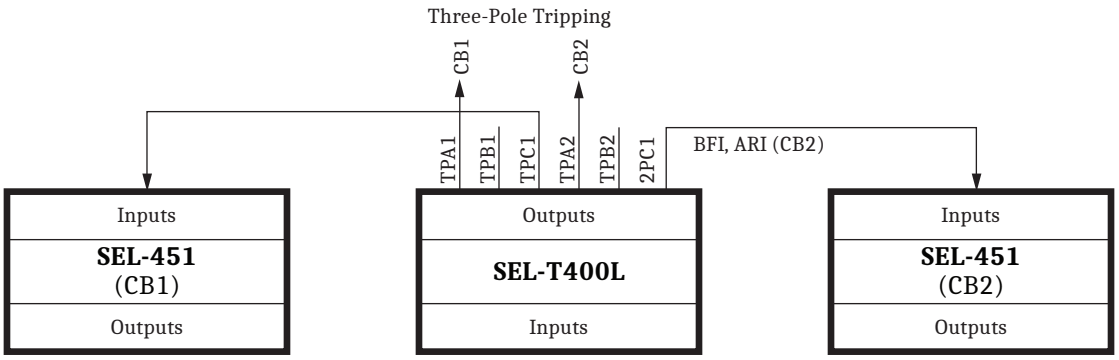

Figure 3.16 Breaker Failure Protection and Autoreclosing Application With Spare SEL-T400L Outputs (Dual-Breaker, Three-Pole Tripping Example)

Figure 3.17 shows a standalone SEL-T400L single-ended fault locating application. Use MIRRORED BITS Port 1 to trigger the fault locator from a line protective relay compatible with MIRRORED BITS communications. Use one of the four programmable SEL-T400L inputs to trigger the SEL-T400L fault locator from a line protection system that is not compatible with MIRRORED BITS. Install the direct point-to-point fiber-optic channel on Port 6 to use double-ended fault locating in the SEL-T400L.

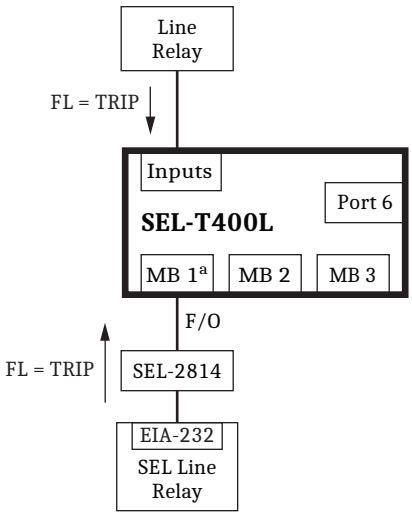

[a]Data encoding set for SEL MB8.

Figure 3.17 Standalone SEL-T400L Fault Locator Application

SECTION 4

Fault Locator and Line Monitor

Introduction

The SEL-T400L incorporates an accurate and dependable fault locator with the following four fault-locating methods:

- Single-ended TW-based method
- Double-ended TW-based method
- Single-ended impedance-based method
- Double-ended impedance-based method

The fault-locating logic makes the best use of data available to the SEL-T400L at any given time. If the direct point-to-point fiber-optic channel is available on Port 6, the SEL-T400L uses double-ended fault-locating methods. The single-ended fault-locating methods are independent of the communications channel. Further, if the SEL-T400L measures adequate traveling-wave (TW) currents, the fault-locating logic uses traveling-wave-based methods. Otherwise, the fault-locating logic relies on impedance-based methods.

A combination of single-ended and double-ended methods, as well as TW-based and impedance-based methods, provides the best accuracy and dependability for any combination of operating conditions and fault types.

For the best fault location results in standalone fault-locating applications, connect line currents and voltages to the SEL-T400L (see *Section 10: Installation*). The double-ended TW-based fault-locating method requires only currents; the single-ended TW-based method similarly requires only currents, but it can benefit from voltages; and the impedance-based methods require both currents and voltages. None of the fault-locating methods require absolute time from an external time source for data alignment. However, it is always a good practice to connect an accurate time source to the SEL-T400L for the benefit of accurate data time-stamping for post-event analysis.

You can apply the SEL-T400L fault locator to two-terminal lines including overhead lines, underground cables, and hybrid lines with a combination of overhead and underground cable sections. Achieve the best fault location results on hybrid lines by using the double-ended TW-based method.

The relay uses the double-ended traveling-wave-based fault-locating method for adaptive control of autoreclosing, allowing or inhibiting reclosing depending on the fault location (see *Adaptive Autoreclose Cancel Logic on page 4.14* for more details). You can use the SEL-T400L fault locator on multiterminal lines, but you will need to implement post-processing calculations on time stamps of the first TWs the relays captured at each line terminal to account for specific line configuration and number of line terminals (see *Fault Locating on Multiterminal Lines on page 4.17* for more information).

The SEL-T400L uses the double-ended traveling-wave fault-locating method for line monitoring to detect weak spots along the line such as dirty or cracked insulators, incipient cable faults, encroaching vegetation, marginal clearance, or mar-

ginal lightning protection. See *Line Monitoring on page G.12* for more details on the operating principle of the line monitor and *Line Monitoring Logic on page 4.18* for information on how to apply and configure this feature.

Figure 4.1 shows an overview of the SEL-T400L fault-locating logic. The SEL-T400L fault locator uses current TWs in conjunction with current and voltage phasors. It uses remote data in addition to local signals if the Port 6 direct point-to-point fiber-optic channel is available or Port 1, 2, or 3 channel is available, as per the FLPORT setting. The fault locator includes triggering logic to capture the prefault data for reporting and the fault data necessary for all four fault-locating methods (single-ended and double-ended, both either TW-based or impedance-based). The relay executes individual methods as soon as the required data become available.

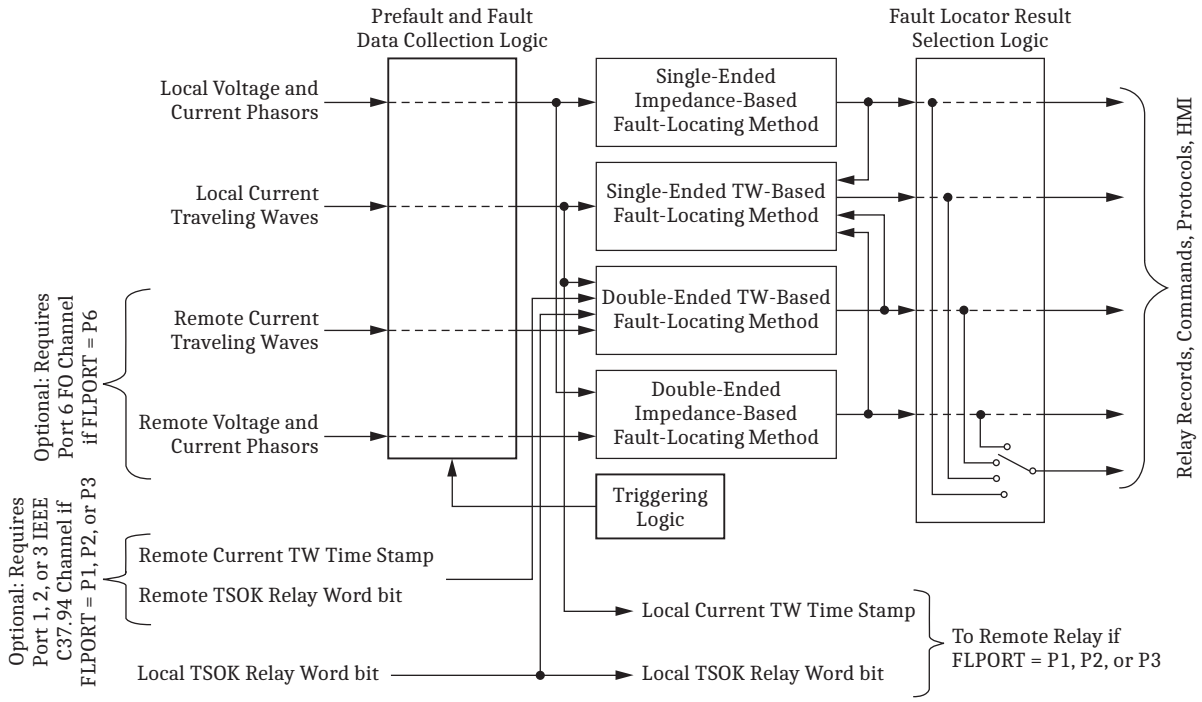

Figure 4.1 Fault Locator Overview

The single-ended TW-based method is the most accurate method in terms of resiliency against inaccuracies in user-provided line data and inaccuracy of time-stamping. However, the TW-based methods use only current TWs and cannot rely on the availability of high-fidelity voltage transformers. Without access to voltage TWs, this method cannot distinguish between forward and reverse TWs that it measures. The single-ended TW-based method may therefore have difficulties selecting the true fault location from among a number of equally likely alternatives. The other fault-locating methods help refine results from the single-ended TW-based method with their fault-locating results.

The double-ended TW-based fault-locating method works with either a direct fiber connection on Port 6 or an IEEE C37.94 multiplexed channel on Port 1, 2, or 3, as per the FLPORT setting. Applications over an IEEE C37.94 channel require channel latency below 30 ms and an accurate time source, such as an IEEE C37.118-compliant satellite clock, connected to both relays. The double-ended impedance-based fault-locating method works only with a direct fiber connection on Port 6 and is not available if you use an IEEE C37.94 channel by setting FLPORT to P1, P2, or P3.

When using Port 6, the relay synchronizes data over the channel and does not rely on an external time source. When using Port 1, 2, or 3 for double-ended TW-based fault locating, the relay calculates the fault location only if both relays are synchronized to accurate time, i.e., when the TSOK Relay Word bits are asserted in both relays at the time of the fault locator trigger.

The SEL-T400L fault-locating logic includes a result-selection logic to provide the best fault location result available under any given operating scenario. This fault location value is available via relay records, the HMI, and commands and protocols. In addition, the event files (COMTRADE files) contain results of all four fault-locating methods for in-depth analysis and for supporting advanced offline fault-locating applications for multiterminal lines.

Fault Locator Application and Settings

Refer to *Section 6: Settings Guidelines* for step-by-step instructions for configuring the fault locator. You must configure the following settings in fault-locating applications:

- Source setting and CT ratios (LINEI, CTRW, CTRX)
- PT ratio (PTR)
- Nominal voltage, frequency, and system phase rotation (VNOM, NFREQ, PHROT)
- Line positive- and zero-sequence impedances (Z1MAG, Z1ANG, Z0MAG, Z0ANG)
- Line length and length unit (LL, LLUNIT)
- Traveling-wave line propagation time (TWLPT)
- TW mode (MODE)
- CT cable-delay compensation (TWCPT)
- Fault locator trigger (FL)
- Fault locator port (FLPORT)

In SEL-T400L protection applications, you already configured most of these settings. You need to select the MODE, TWCPT, and TWLPT settings to complete the fault-locating application. To use double-ended fault-locating methods, you need to configure the fault locator port, FLPORT, to indicate which port and channel you have provisioned for the SEL-T400L fault-locating applications. The TWLPT may already be set for the TW87 protection scheme. The TWCPT improves accuracy of the double-ended TW-based method; however, you may decide not to use this setting if you have difficulties obtaining the secondary CT cable data.

Table 4.1 lists the fault locator settings.

Table 4.1 Fault Locator Settings

Name	Description	Range	Default
FL	Fault Locator Trigger (as many as 24 Relay Word bits)	All RWBs, NA	TRIP
FLPORT	Fault Locator Data Port	P1, P2, P3, P6	P1

FL

Set the fault locator trigger by specifying the Relay Word bits to use as triggers. Use the TRIP Relay Word bit to trigger fault locating on the trip signal asserted by the SEL-T400L. Use a contact input or a MIRRORED BITS input to trigger on trip signals of other relays or on other external conditions.

When you use the line monitor, the assertion of the fault locator trigger signals the line monitoring logic that the event is a fault and not a low-energy event. Do not include the TWIDD or TWDD Relay Word bit in the FL setting when using the line monitor with ELM set to YE.

FLPORT

Select the data port to receive fault-locating data from the remote SEL-T400L. Remember to enable the selected port and ensure that the settings for the transmit and receive addresses match in the local and remote relays.

If your application uses a direct fiber connection, set FLPORT = P6. In this application, double-ended fault locating does not depend on external time sources, and it executes both the TW-based and the impedance-based double-ended methods.

If your application uses an IEEE C37.94 multiplexed channel, set FLPORT = P1, P2, or P3, depending on which port you provisioned to connect to the remote SEL-T400L. Remember to set the port ENCODING setting to C37.94. This application requires channel latency to be below 30 ms. To use an IEEE C37.94 multiplexed channel for fault locating, you must connect both relays to accurate time sources, such as satellite clocks.

Fault Locator Trigger and Data Collection

Figure 4.2 shows a timing diagram helpful in understanding the SEL-T400L fault-locating logic, interpreting its results, and testing it.

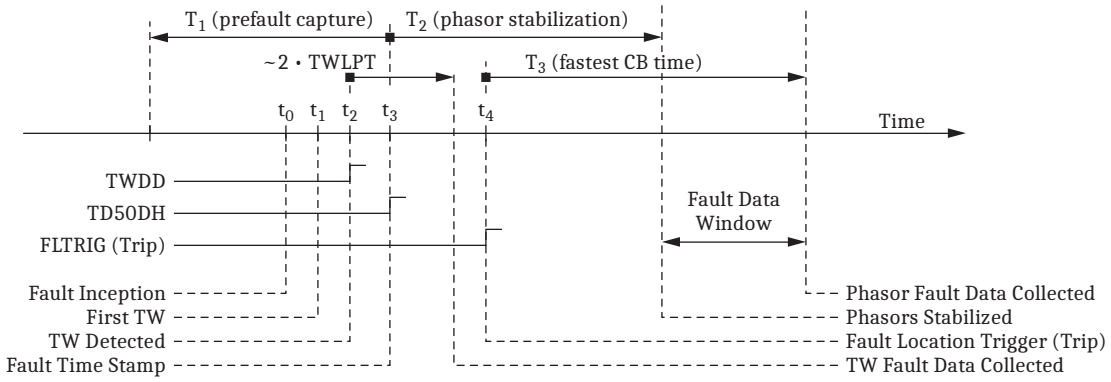

Figure 4.2 Fault Locator Timing Diagram (Not to Scale)

In this timing diagram, time stamps are defined as follows:

- t_0 is the time of a line fault (TWs are launched at this time and propagate away from the fault location).
- t_1 is the time of arrival of the first TW associated with the line fault. The difference between t_1 and t_0 is in tens or hundreds of microseconds (between 0 and TWLPT, depending on the fault location).

- t_2 is the time at which the TWDD logic (see *Traveling-Wave Disturbance Detectors on page 2.12*) asserts in response to the first TW that arrived at the line terminal. The difference between t_2 and t_1 is approximately a few microseconds. Assertion of the TWDD logic initiates collecting TW data for the TW-based fault-locating methods.
- t_3 is the time at which the TD50DH disturbance detection logic (see *Starting Logic on page 2.9*) asserts in response to changes in currents at the line terminal. The relay uses the t_3 time stamp as the time of fault when reporting the fault location. The difference between t_3 and t_1 is approximately 0.2–0.5 ms. Assertion of the TD50DH logic captures prefault phasors and determines a time window for capturing stable fault phasors for the impedance-based fault-locating methods.
- $t_3 - T_1$ is the disturbance detection time backdated by arbitrary time interval T_1 (e.g., 40 ms). The SEL-T400L reports prefault phasors captured at the $(t_3 - T_1)$ point in time.
- $t_3 + T_2$ is the disturbance detection time plus time interval T_2 (e.g., 1.25 cycles) necessary for the SEL-T400L phasors to stabilize following a fault. The SEL-T400L reports, and uses in the impedance-based fault-locating methods, phasors it captures after the $(t_3 + T_2)$ point in time.
- t_4 is the time at which the effective fault locator trigger (FLTRIG [a combination of the FL setting and factory-preconfigured conditions]) asserts, signifying a trip command either issued by the SEL-T400L protection elements or schemes, or received from another relay via a contact input or a MIRRORED BITS input configured under the FL setting.
- $t_4 + T_3$ is the FL trigger time (internal or external trip time) plus time interval T_3 (e.g., 1.50 cycles) before the circuit breaker starts contact arcing and creates a new transient for the phasors the SEL-T400L measures. The SEL-T400L reports, and uses in the impedance-based fault-locating methods, phasors it captured until the $(t_4 + T_3)$ point in time.
- The SEL-T400L defines fault phasors through a weighted average of values between the $(t_3 + T_2)$ and $(t_4 + T_3)$ points in time. Phasors close to the edges of this window may be affected by transients; the middle of the window is typically less affected. The weighting factors reflect this observation and improve the fault location accuracy for the impedance-based methods.
- The SEL-T400L fault-locating logic monitors for the assertion of the fault locator trigger (FLTRIG) for $T_2 + T_3$ (e.g., about 2.75 cycles). If FLTRIG does not assert within this time following a TD50DH assertion, the fault-locating logic ignores the TD50DH assertion and the associated prefault data capture, and it resets (resulting in no fault location calculations or reporting).

NOTE: Trigger the SEL-T400L fault-locating logic with instantaneous trip commands and not with time-delayed trips. The SEL-T400L fault locator must receive a trigger from an external device within 2 cycles from fault inception.

The SEL-T400L collects TW data for as long as twice TWLPT following assertion of TWDD. As a result, the TW data are typically already available when FLTRIG asserts and triggers the fault-locating calculations. Therefore, the logic executes the double-ended TW-based fault-locating method when FLTRIG asserts. The results are available within milliseconds to support the adaptive auto-reclosing control.

Data necessary for the impedance-based fault-locating methods are available from $t_3 + T_2$ to $t_4 + T_3$ (i.e., between about 1.25 cycles after the disturbance and about 1.50 cycles after FLTRIG assertion). Both the single-ended and double-ended impedance-based methods execute at $t_4 + T_3$, and they return their results in about 10 ms.

With results available from the double-ended TW-based method and both impedance-based methods, the SEL-T400L executes the single-ended TW-based method. The process of fault locating typically completes within 50 ms following FLTRIG assertion. The double-ended TW-based fault location result that the adaptive autoreclose cancel logic uses is available to internal relay logic in less than 10 ms following FLTRIG assertion.

Figure 4.3 shows the fault locator triggering logic. The TRIP Relay Word bit is included in the trigger by default. Include external conditions to trigger the fault locator in the FL setting. The relay accepts the trigger condition only if the relay currents have been in a quiescent state prior to the trigger (no TD50DH assertion for $2 \bullet T_1$ time, e.g., for about 80 ms). Furthermore, the fault locator trigger asserts for faults on a normally operated line, i.e., when the line is not undergoing a single-pole-trip-and-reclose operation (Relay Word bit TOP deasserted, and there is no single-pole open condition present). Assertion of FLTRIG triggers the fault-locating calculations and cross-triggers the event-reporting function of the relay (FLTRIG is included in the ERTRIG logic; see *Section 5: Fault and Event Recording* for more details). The logic does not accept new triggers until the event recorder finishes recording (i.e., until the falling edge of ERTRIG).

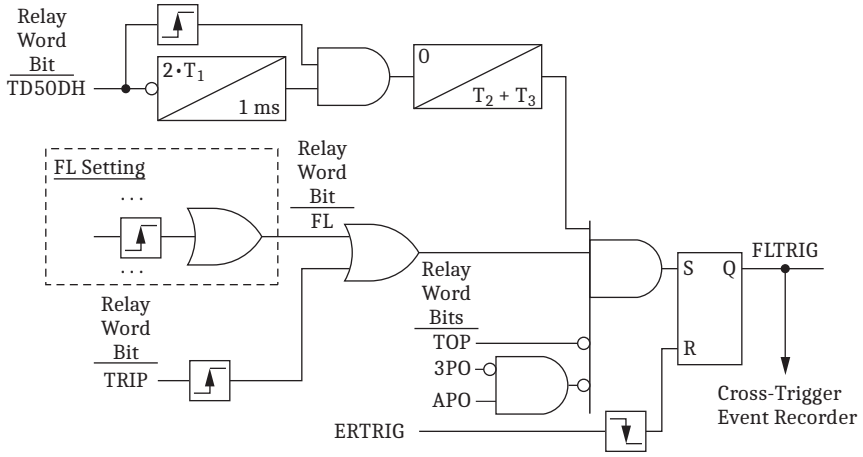

Figure 4.3 Fault Locator Triggering Logic

Double-Ended Traveling-Wave-Based Method

Operating Principle

Figure 4.4 shows a Bewley diagram for a fault at location F on a line of length LL. The fault is M (mi or km) away from the local terminal (S) and LL – M (mi or km) away from the remote terminal (R). The TW propagation velocity (PV) for the line is LL/TWLPT (LL and TWLPT are the total line length and the TW line propagation time settings, respectively).

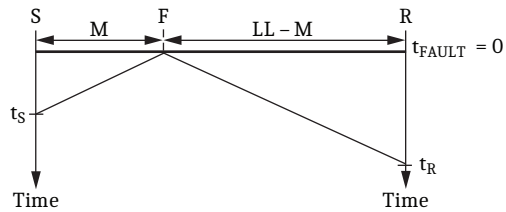

Figure 4.4 Bewley Diagram Explaining Double-Ended TW-Based Fault-Locating Method

The first TW arrives at the local terminal (S) at t_S = M/PV time. The first TW arrives at the remote terminal (R) at t_R = (LL – M)/PV. Solving these two equations for the fault location, M, we obtain the following:

$$M = \frac{LL}{2}\left(1 + \frac{t_S - t_R}{TWLPT}\right)$$

Equation 4.1

The SEL-T400L double-ended TW-based fault-locating method compensates for the CT cable delay between the CTs and the relay by backdating the time stamps through use of the TWCPT local and remote settings as follows:

$$\begin{aligned} M &= \frac{LL}{2}\left(1 + \frac{(t_S - TWCPT_S) - (t_R - TWCPT_R)}{TWLPT}\right) \\ &= \frac{LL}{2}\left(1 + \frac{(t_S - t_R) - (TWCPT_S - TWCPT_R)}{TWLPT}\right) \end{aligned}$$

Equation 4.2

Equation 4.2 signifies that the double-ended TW-based fault location is effectively compensated by the difference in the CT cable delays at both terminals of the line, and the cable compensation becomes marginally important if the two CT cable delays are similar.

The double-ended TW-based fault-locating method uses *Equation 4.2*, which uses the following parameters and measurements:

LL = line length in mi or km, provided as a setting under Line Configuration.

TWLPT = TW line propagation time provided as a setting under Line Configuration (SEL recommends measuring this value rather than calculating it. See *Section 11: Testing and Commissioning* for more information).

TWCPT = CT cable propagation time provided as a setting under Fault Locator (see *Section 6: Settings Guidelines* for more information). The remote SEL-T400L communicates its TWCPT setting over the Port 6 channel.

$t_S - t_R$ = difference between the arrival time of the first current TW at the local and remote line terminals, respectively. This time difference calculation is accurate so long as the two SEL-T400L Relays are synchronized over the direct point-to-point fiber-optic channel on Port 6 (Relay Word bit TW87OK asserted). The two SEL-T400L Relays do not need to be synchronized to an absolute time for the $t_S - t_R$ measurement to be accurate.

The SEL-T400L measures current TWs by using a differentiator-smoother filter (see *Appendix G: Signal Processing*). The TW-based fault-locating methods work with TW samples taken every microsecond and apply a time-stamping algorithm that uses interpolation to achieve time-stamping accuracy of approximately 0.1 µs (see *Appendix G: Signal Processing* for more details).

The double-ended TW-based fault-locating method works with either the modal signals (MODE setting selected as CLARKE) or phase signals (MODE setting selected as PHASE). See *Section 6: Settings Guidelines* for more information on how to select the MODE setting.

In applications using modal signals, the fault-locating logic selects the mode with greatest TW magnitude for time-stamping. In applications using phase signals, the fault-locating logic selects the phase with greatest TW magnitude for time-stamping.

NOTE: The double-ended TW-based method works with a direct fiber connection on Port 6 or an IEEE C37.94 multiplexed channel on Port 1, 2, or 3, as per the FLPORT setting. When using Port 1, 2, or 3 for double-ended TW-based fault locating, you must connect both relays to accurate time sources, such as IEEE C37.118-compliant satellite clocks.

The double-ended TW-based method uses first current TWs. The logic defines the first TWs as those that precede TWDD assertion and that have a magnitude that is greater than half of the maximum magnitude of all traveling waves captured within the TW data collection period (approximately twice TWLPT).

Accuracy Analysis

Use *Equation 4.2* for analysis of the fault locator sensitivity to errors in settings and time-stamping. Expect the following sensitivities to errors:

- 1 percent of error in the LL setting results in 1 percent of error in the fault location.
- 1 µs of error in the TWLPT setting results in a fault locating error of as much as 150 m (500 ft) for overhead lines and as much as 75 m (250 ft) for underground cables.
- 0.1 µs of error in the TWCPT setting results in about 15 m (50 ft) of error in the fault location on overhead lines and about 7.5 m (25 ft) on underground cables.
- 0.1 µs of error in SEL-T400L time-stamping results in about 15 m (50 ft) of error in the fault location on overhead lines and about 7.5 m (25 ft) on underground cables.

Expect line sag of about 0.3 percent of the line length. The sag changes with ambient temperature and line loading, resulting in line length changes of a fraction of 0.3 percent. As a result, you may expect an extra fault-locating error of a fraction of 0.3 percent.

Minimize errors in the TWLPT setting by measuring the propagation time during SEL-T400L commissioning (see *Section 11: Testing and Commissioning*). Improve line length data (LL setting) accuracy by correlating reported fault locations with confirmation of locations by your line crews. Approximate the CT cable lengths and enter expected TWCPT settings to account for distance and travel time between the CTs and the relay (see *Section 6: Settings Guidelines*).

SEL has a field-proven track record with the double-ended TW-based fault-locating method (obtained through use of the SEL-411L Relay) with reported errors within one tower span (300 m; 1000 ft) on average.

When tested under ideal conditions, the double-ended TW-based method yields a 90th percentile error less than 20 m (66 ft) and a median error less than 10 m (33 ft).

Single-Ended Traveling-Wave-Based Method

Operating Principle

Figure 4.5 shows a Bewley diagram for a fault at location F on a line of length LL. The fault is M (mi or km) away from the local terminal (S) and LL – M (mi or km) away from the remote terminal (R). Consider the bus (B) behind the local terminal (S) to be a bus terminating a line connected to the terminal.

A current TW launched at the fault point (F) arrives at the local terminal (S) at t_1. Part of it reflects, travels back toward the fault, reflects back from the fault, and then returns to the local terminal (S) at t_4. During the $t_4 – t_1$ time interval, the TW traveled a distance of 2•M.

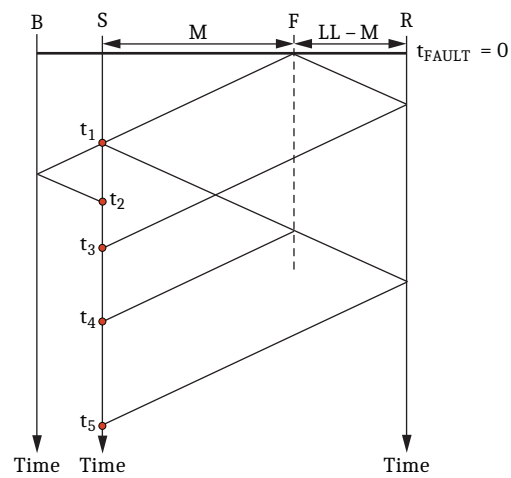

Figure 4.5 Bewley Diagram Explaining Single-Ended TW-Based Fault-Locating Method

We write the distance-velocity-time equation as follows:

$$2 \bullet M = (t_4 - t_1) \bullet PV$$

Equation 4.3

Where the propagation velocity, PV, is

$$PV = \frac{LL}{TWLPT}$$

Equation 4.4

Substituting *Equation 4.4* into *Equation 4.3*, and solving for M, we obtain the single-ended TW-based fault-locating method:

$$M = \frac{(t_4 - t_1)}{2 \bullet TWLPT} \bullet LL$$

Equation 4.5

The method shown in *Equation 4.5* uses only local time stamps and is therefore immune to errors and tolerances in time alignment between the local and remote relay.

The method works well if it correctly identifies the first return from the fault (the t_4 time). *Figure 4.5* shows that the first TW that arrived at t_1 continued toward the bus (B), reflected from the bus, and then returned to the local terminal at time t_2.

If the method mistook t_2 for the first return from the fault, the fault location result would be entirely incorrect. Similarly, the first TW that arrived at the remote terminal (R) reflects from the bus and returns to the local terminal (S), propagating through the fault point (F). This TW arrives at the local terminal at t_3. If the method mistook t_3 for the first return from the fault, the fault location result would similarly be entirely incorrect.

The SEL-T400L single-ended TW-based method solves this challenge by applying the following techniques:

- Available fault location results from the other three fault-locating methods are used to narrow down the fault location and to calculate the expected time stamp of the first return from the fault.
- Several alternatives for the fault location are considered and evaluated for plausibility. For example, with reference to *Figure 4.5*, the method assumes that t_2, t_3, and t_4 are possible first returns from the fault and calculates three possible fault locations.
- Time stamps of expected TWs are generated for any given plausible fault location. For example, with reference to *Figure 4.5*, when evaluating the alternative of t_4 as the first return from the fault, the method expects to measure TWs at t_3 (first return from the remote terminal) and t_5 (reflection of the first TW from the local bus traveling to the remote terminal and returning).
- The alternative fault locations are ranked based on how well they fit the actual TW pattern the relay measures. The single-ended TW-based fault-locating method reports both the best alternative and as many as three highest-ranking alternatives, if they are available.

The single-ended TW-based method uses identical signal processing, including selecting the mode and precise time-stamping via interpolation, as the double-ended method. This method is not affected by the TW CT cable delays, because these delays mutually cancel in the time difference used in *Equation 4.5*.

Accuracy Analysis

Use *Equation 4.5* for analysis of the fault locator sensitivity to errors in settings and time-stamping measurements. Expect the following sensitivities to errors:

- 1 percent of error in the LL setting results in 1 percent of error in the fault location.
- 1 µs of error in the TWLPT setting results in a fault locating error of as much as 300 m (1000 ft) for overhead lines and as much as 150 m (500 ft) for underground cables.

When tested under ideal conditions, the single-ended TW-based method yields a 90th percentile error less than 20 m (66 ft) and a median error less than 10 m (33 ft).

Single-Ended Impedance-Based Method

Operating Principle

The SEL-T400L uses a single-ended impedance-based fault-locating method with negative-sequence current polarization for unbalanced faults and positive-sequence polarization for three-phase symmetrical faults. SEL relays and software have used this method for decades with a good track record in the field.

The impedance-based fault-locating logic selects one of six protection measurement loops for further calculations based upon local incremental voltages and currents (see *Fault-Type Identification Logic on page 2.13*) and assertion of SEL-T400L protection elements and schemes. For double-phase-to-ground faults, the logic favors the phase loop over the two ground loops. For three-phase symmetrical faults, the logic uses positive-sequence voltages and currents.

Once the impedance-based fault-locating logic selects the faulted loop (LP = AG, BG, CG, AB, BC, CA, positive-sequence), the logic calculates the loop voltage and current phasors (V_{LP} and I_{LP}, respectively [see *Table G.5*]).

Next, the single-ended impedance-based fault-locating logic calculates the polarizing current, IPOL. The polarizing current is the negative-sequence current. In applications using the positive-sequence loop, the logic polarizes the calculations with the positive-sequence current.

The single-ended impedance-based method calculates the fault location M (mi or km) as follows:

$$M = LL \bullet \frac{\mathrm{Im}(V_{LP} \bullet I_{POL}^{*})}{\mathrm{Im}(Z_1 \bullet I_{LP} \bullet I_{POL}^{*})}$$

Equation 4.6

where:

Z_1 is the positive-sequence impedance of the line defined by the Z1MAG and Z1ANG settings;

Im stands for the imaginary part of a complex number; and

* denotes a complex conjugate.

The logic calculates the loop current for the ground loops in *Equation 4.6* by using the line Z_0/Z_1 complex impedance ratio derived from the Z1MAG, Z1ANG, Z0MAG, and Z0ANG settings (see *Table G.5*). Therefore, both the positive- and zero-sequence line impedance data are involved in the fault-locating calculations for the ground loops.

The SEL-T400L fault-locating logic executes *Equation 4.6* on fault phasors captured within the fault-data window, as *Figure 4.2* explains. The length of the fault-data window for the impedance-based fault-locating methods is variable and can be as short as 4 ms, or as long as about one and a half power system cycles for slow trips depending on the protection operating time. The logic averages the fault location M over the fault-data window by using a weighted-average approach. The fault voltage and current phasors have a better chance of stabilizing in the middle of the window than at the edges. At the beginning of the window, the phasors may still exhibit a transient resulting from the fault inception. At the end of the window, the phasors may already be affected by a new transient resulting from circuit breaker operation. For very fast relay and breaker operation, averaging improves accuracy of the method relative to phasor transients.

Accuracy Analysis

Accuracy of the single-ended impedance-based fault-locating method depends on a number of well-known factors including accuracy of line impedance data, fault resistance, system nonhomogeneity, and mutual coupling. Evaluate *Equation 4.6* for formal analysis of fault locator sensitivity to errors in settings and phasor measurements. Do not expect accuracy better than about 2–5 percent of the line length unless the fault resistance is small, the line parameters are very accurate,

and the line is not mutually coupled. For single-line-to-ground faults with high resistance and in a nonhomogeneous system, expect fault location errors much greater than 5 percent.

Double-Ended Impedance-Based Method

Operating Principle

The SEL-T400L uses the double-ended impedance-based fault-locating method based on the negative-sequence voltage profile along the faulted line for unbalanced faults. This method is used in ACSELERATOR TEAM SEL-5045 Software for fault locating on transmission lines, and it has a good track record in the field.

Figure 4.6 shows a negative-sequence voltage profile for a fault at location F on a line of length LL. The fault is M (mi or km) away from the local terminal (S) and LL – M (mi or km) away from the remote terminal (R).

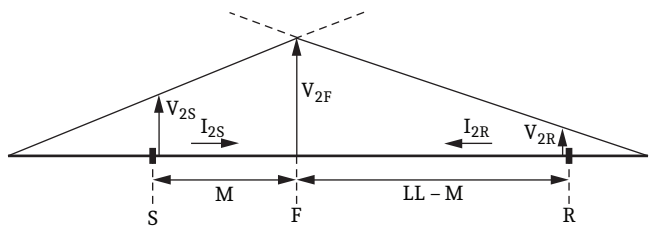

Figure 4.6 Negative-Sequence Voltage Profile Explaining Double-Ended Impedance-Based Fault-Locating Method

The negative-sequence voltage at the fault location (V_{2F}) in terms of the S-terminal voltage and current is calculated as follows:

$$V_{2F} = V_{2S} - \frac{M}{LL} \bullet Z_1 \bullet I_{2S}$$

Equation 4.7

The negative-sequence voltage at the fault location (V_{2F}) in terms of the R-terminal voltage and current is calculated as follows:

$$V_{2F} = V_{2R} - \frac{LL - M}{LL} \bullet Z_1 \bullet I_{2R}$$

Equation 4.8

Comparing *Equation 4.7* and *Equation 4.8* and solving for M, we obtain the following equation:

$$M = LL \bullet \mathrm{Re}\left(\frac{(V_{2S} - V_{2R}) + Z_1 \bullet I_{2R}}{Z_1 \bullet (I_{2S} + I_{2R})}\right)$$

Equation 4.9

The SEL-T400L double-ended impedance-based method uses both local and remote voltage and current phasors and therefore requires alignment of local and remote data. As a result, the SEL-T400L offers this method only if the direct point-to-point fiber-optic channel is available on Port 6. The two SEL-T400L Relays align their phasor data through use of the communications channel and do not rely on external time sources (e.g., satellite clocks).

NOTE: The double-ended impedance-based method works only with a direct fiber connection on Port 6.

The double-ended impedance-based fault-locating logic uses negative-sequence phasors for all unbalanced faults and positive-sequence phasors for three-phase balanced faults. It executes *Equation 4.9* on phasors from the fault-data window shown in *Figure 4.2*. It further averages the result as explained for the single-ended method.

Accuracy Analysis

Use *Equation 4.9* for analysis of fault locator sensitivity to errors in settings and phasor measurements. Expect better accuracy than for the single-ended impedance-based method. Specifically, the SEL-T400L double-ended impedance-based fault-locating method is immune to the remote infeed effect, and it works well for resistive faults in nonhomogeneous systems. Line nonhomogeneity (transposition) affects this method but to a lesser degree than it affects the single-ended impedance-based method. Also, this method is not affected by mutual zero-sequence coupling or errors in the zero-sequence line impedance data. However, do not expect accuracy better than about 1–2 percent of the line length for ground faults.

Selecting and Reporting Best Fault Location Results

The SEL-T400L fault locator executes all four fault-locating methods so long as it has valid data for each. *Table 4.2* shows the operating conditions relevant for each of the four methods and how they impact availability of the fault location results.

Table 4.2 Effect of Abnormal Conditions on SEL-T400L Fault-Locating Methods

Fault-Locating Method	Local Relay Condition		Port 6 Channel Problem	Remote Relay Condition	
	A/D Alarm Asserted	LOP Asserted		A/D Alarm Asserted	LOP Asserted
Single-Ended Impedance-Based	Not Available	Not Available	Operates Normally	Operates Normally	Operates Normally
Single-Ended TW-Based	Not Available	Can Be Affected[a]	Operates Normally	Operates Normally	Operates Normally
Double-Ended Impedance-Based	Not Available	Not Available	Not Available	Not Available	Not Available
Double-Ended TW-Based	Not Available	Operates Normally	Not Available	Not Available	Operates Normally

[a] The impedance-based methods do not provide the initial fault location approximation.

The fault-locating logic selects the most accurate and reliable fault location based on results from all methods available for a given application and present operating condition. The SEL-T400L applies the following general selection criteria:

- The double-ended TW-based method has the highest priority.
- The single-ended TW-based method has the second highest priority as long as it is corroborated by the double-ended TW-based method, double-ended impedance-based method, or single-ended impedance-based method (in that order, depending on availability). This supervision ensures that the single-ended TW-based method selects the correct fault location result.

- The double-ended impedance-based method has the third highest priority.
- The single-ended impedance-based method has the lowest priority.

The SEL-T400L reports the most accurate and reliable fault location as a part of the fault data in the header files of the 10 kHz (TDR) and 1 MHz (MHR) IEEE COMTRADE event files. The user can also obtain the fault location by using the **SUM** and **HIS** commands and the DNP3 LAN/WAN over Ethernet and SEL Fast Meter protocols. The relay also reports individual results from all four fault-locating methods, including multiple alternatives from the single-ended TW-based method, in the header files of the IEEE COMTRADE event records. The user can also obtain this information by using DNP3 LAN/WAN over Ethernet.

The fault summary includes the following characteristics of the fault (via the **SUM** command; see *Figure 5.6 on page 5.11* and *Table 5.4 on page 5.11*):

- **Fault Time.** Fault Time is the time stamp of the disturbance (shown as t_3 in *Figure 4.2*). This time stamp differs from the time of the event report (ER) condition that triggers the event file containing the fault data.
- **Fault location.** Fault location is the most accurate and dependable result based on as many as all four SEL-T400L fault-locating methods.
- **Fault type.** The phase-selection part of the trip logic (see *Trip Logic on page 2.45*) defines the fault type reported with the fault data and records it in the **Event Type** field of the SUMMARY report. The fault-locating logic reports fault type according to the indication of the incremental-quantity protection elements and schemes.
- **Prefault and fault local line voltage and current phasors and system frequency.** The prefault values are snapshots of measurements the relay took before detecting the disturbance. The fault values are weighted averages of values from the fault-data window (see *Figure 4.2*).
- **Prefault and fault remote line voltage and current phasors, if available.**

See *Section 9: SCADA and HMI Protocols* for more information on how to access the fault data for your SCADA and HMI applications.

Adaptive Autoreclose Cancel Logic

The adaptive autoreclose cancel logic includes the autoreclose cancel Relay Word bit ARC, which interfaces with the fault locator to provide a control signal to an external autorecloser that allows or inhibits reclosing of the breaker (depending on the fault location). To configure this feature, ensure that setting EADVS = Y.

When calculating the fault location with the double-ended TW-based method, the SEL-T400L fault-locating algorithm makes the fault location available to the relay logic in less than 10 ms following the fault locator trigger assertion if using Port 6 and in less than 60 ms if using Port 1, 2, or 3. Apply the double-ended TW-based fault-locating method on hybrid lines with overhead and underground sections. The double-ended TW-based fault-locating algorithm compensates for line nonhomogeneity and provides accurate results for faults on the overhead lines and cable sections. The other SEL-T400L fault-locating methods do not compensate for line nonhomogeneity.

Use the adaptive autoreclose cancel logic to supervise an external autorecloser for the following applications:

- Hybrid lines with overhead lines and underground cable sections, to inhibit autoreclose for faults on cable sections.
- Tapped lines, to inhibit autoreclose for faults located downstream from the unmeasured tap or taps (faults on the tapped section appear to the fault locator as being located at the tap).
- Series-compensated lines, to inhibit autoreclose for faults located close to the capacitor banks to avoid reclosing for faults on the capacitor platform.

The adaptive autoreclose cancel logic is operational only if the double-ended TW-based fault-locating method is used. It therefore requires either the direct point-to-point fiber-optic channel or an IEEE C37.94 multiplexed channel between two SEL-T400L Relays. When using an IEEE C37.94 channel in adaptive autoreclose cancel applications, you must connect each relay to an accurate time source, such as an IEEE C37.118-compliant satellite clock.

Figure 4.7 shows the autoreclose cancel logic diagram. The logic operates when the double-ended TW-based fault-locating method triggers and finishes calculating the fault location. The ARC Relay Word bit encodes the cancel action for the autorecloser and becomes available as the MIRRORED BITS communications output TMB7 for 5 seconds following its assertion. Use this output to supervise the external autorecloser.

If the double-ended fault location is available, the logic compares the fault location with as many as two autoreclosing blocking regions, defined by the ARC1B, ARC1E, ARC2B, and ARC2E settings (enumerations 1 and 2 designate two blocking regions, with indices B and E standing for the beginning and ending of a blocking region). The output ARC bit asserts if the fault location falls within either of the blocking regions. Do not confuse the TW87 blocking regions with the autoreclose blocking regions.

If the double-ended fault location is not available, the logic switch changes to position N in *Figure 4.7* and forces the ARC output to a fail-safe value provided by the ARCD setting.

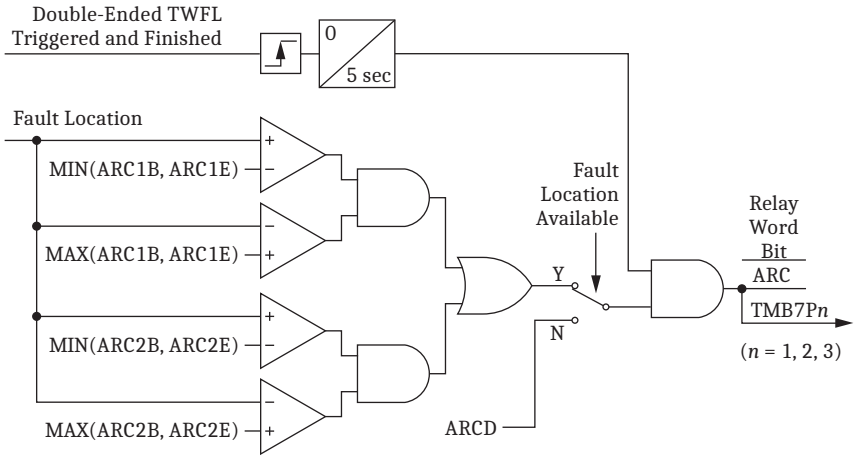

Figure 4.7 Autoreclose Cancel Logic Diagram

Table 4.3 Autoreclose Cancel Logic Settings

Name	Description	Range	Default
ARC1B	Autoreclose cancel region 1 begin (mi or km[a])	0.00–LL	0.00
ARC1E	Autoreclose cancel region 1 end (mi or km)	0.00–LL	0.00
ARC2B	Autoreclose cancel region 2 begin (mi or km)	0.00–LL	0.00
ARC2E	Autoreclose cancel region 2 end (mi or km)	0.00–LL	0.00
ARCD	Autoreclose cancel default	0, 1	1

[a] According to the LLUNIT setting.

Table 4.4 Autoreclose Cancel Logic Relay Word Bits

Relay Word Bit	Description
ARC	Autoreclose cancel asserted

Adhere to the following general settings recommendations when selecting autoreclose cancel logic settings.

ARC1B and ARC1E

Enter the begin (ARC1B) and end (ARC1E) positions of the first autoreclose inhibit region in units specified by the LLUNIT setting (mi or km) from the local line terminal (see *Figure 4.8*).

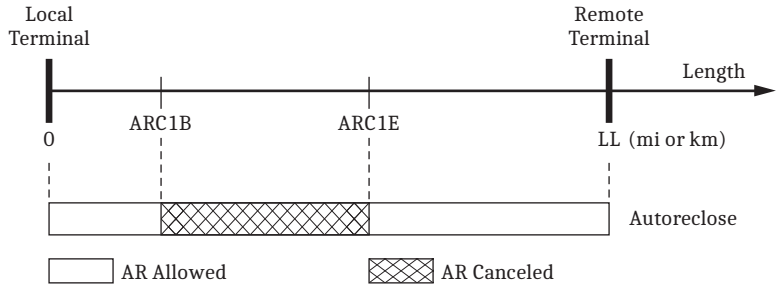

Figure 4.8 Explanation of the Autoreclose Blocking Settings

Typically, the autorecloser should not reclose for faults in cable sections, near series capacitors, or near unmeasured line taps that connect transformers. Use the ARC1B setting to indicate the location of the beginning of the first blocking region. Consider a small margin for dependability of the autoreclose inhibit operation by setting the inhibit region slightly larger than the line segment for which the reclosing shall be canceled. See *Accuracy Analysis on page 4.8* for guidance.

ARC2B and ARC2E

Enter the beginning and end positions of the second autoreclose cancel region.

ARCD

Enter the fail-safe output you want from the autoreclose cancel logic for the case in which the double-ended fault location is not available. Set ARCD as 0 to allow, or as 1 to inhibit, autoreclosing for the entire line should the SEL-T400L fail to locate the fault.

Fault Locating on Multiterminal Lines

The header files of the 10 kHz (TDR) and 1 MHz (MHR) IEEE COMTRADE records contain precise time stamps of the first TW the relay recorded and associated with the FL trigger. The relay compensates these time stamps for the CT secondary cable delay. You can extract these time stamps from the files and use them for multiterminal fault locating for three- and four-terminal lines. You can use this approach if all relays are time-synchronized. The time stamps of the first TW can also be obtained using DNP3 LAN/WAN over Ethernet.

This section provides an example of how to derive fault-locating equations for multiterminal lines. You can program these equations into your SCADA/HMI software and obtain a precise multiended TW-based fault-locating method.

Figure 4.9 shows a three-terminal line with Terminals R, S, and T and Tap Point P. The figure lists lengths and propagation times for each segment of the line. The time stamps of the first TWs at each terminal are t_R, t_S, and t_T, respectively. Obtain these time stamps either from the header file of the IEEE COMTRADE event record or by using DNP3 LAN/WAN over Ethernet. Use the time stamp in the date and time format labeled as First_TW_Time_Local when obtaining the time stamps from the header file of the IEEE COMTRADE event record. Determine the first wave arrival time stamps from the millisecond, microsecond, and nanosecond (FILTWMS, FILTWUS, and FILTWNS) values when using DNP3 LAN/WAN over Ethernet (see *Appendix E: Analog Quantities* for more information).

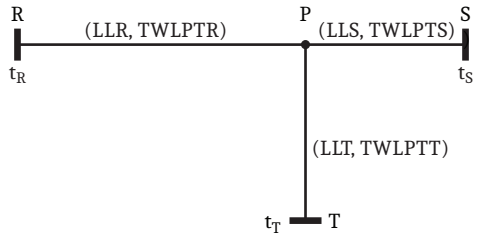

Figure 4.9 Multiended TW-Based Fault-Locating Method Explanation for Three-Terminal Lines

Use the following logic to identify the faulted line segment and to calculate the precise fault location from the terminal associated with the faulted segment.

Calculate the time stamp at the tap (P) by using time stamps from each line terminal separately and propagation times of the associated line sections as follows:

$$t_{P@R} = t_R - TWLPTR$$
$$t_{P@S} = t_S - TWLPTS$$
$$t_{P@T} = t_T - TWLPTT$$

If $t_{P@S} \approx t_{P@T}$, then the fault is on the RP segment. Average the time stamp for the tap as follows:

$$t_P = \frac{1}{2}(t_{P@S} + t_{P@T})$$

and calculate the fault location (M) from the terminal (R) by using *Equation 4.1 on page 4.7* as follows:

$$M = \frac{LLR}{2}\left(1 + \frac{t_R - t_P}{TWLPTR}\right)$$

If $t_{P@S} \approx t_{P@R}$, then the fault is on the TP segment. Average the time stamp for the tap as follows:

$$t_P = \frac{1}{2}(t_{P@S} + t_{P@R})$$

and calculate the fault location (M) from the terminal (T) by using *Equation 4.1 on page 4.7* as follows:

$$M = \frac{LLT}{2}\left(1 + \frac{t_T - t_P}{TWLPTT}\right)$$

If $t_{P@R} \approx t_{P@T}$, then the fault is on the SP segment. Average the time stamp for the tap as follows:

$$t_P = \frac{1}{2}(t_{P@R} + t_{P@T})$$

and calculate the fault location (M) from terminal (S) by using *Equation 4.1 on page 4.7* as follows:

$$M = \frac{LLS}{2}\left(1 + \frac{t_S - t_P}{TWLPTS}\right)$$

Apply similar reasoning to derive equations for four-terminal lines.

Line Monitoring Logic

The line monitor is operational only if the relay uses the double-ended TW-based fault-locating method. It therefore requires either a direct fiber-optic channel or an IEEE C37.94 multiplexed channel between two SEL-T400L relays. When using an IEEE C37.94 channel in line monitoring applications, you must connect each relay to an accurate time source, such as an IEEE C37.118-compliant satellite clock. Refer to *Line Monitoring on page G.12* for more information.

Line Monitor Settings

Table 4.5 lists the line monitor settings.

Table 4.5 Line Monitor Settings

Name[a]	Description	Range	Default
ELM	Enable Line Monitoring	Y, YE, YF, N	Y
LMALARM	Line Monitoring Alarm Threshold	1–200	3
LMBL*n*	Line Monitoring Blocking Location *n*	OFF, 0.00–[LL]	OFF
LMBR*n*	Line Monitoring Blocking Location *n* Radius	0.00–10.00	0.20
LMALRM*n*	Line Monitoring Blocking Region *n* Alarm Threshold	1–200	10

[a] *n* = 1–2.

Follow the general settings recommendations in the following paragraphs when selecting the line monitor settings.

ELM

Use the ELM setting to enable the line monitor and to specify the type of events you want to monitor.

Set ELM to YE to monitor the power line for low-energy events. The line monitor will detect, locate, tabulate, and alarm for discharge across dirty or damaged insulators, incipient cable faults, discharge from encroaching vegetation, and other events not accompanied by protection operation. For the line monitor to function, you do not have to program disturbance detectors in the FL SELOGIC equation. Moreover, triggering the fault locator on non-fault events prevents the line monitor from classifying these low-energy events as non-fault events. The line monitor uses the absence of the fault locator trigger including the SEL-T400L trip command to distinguish non-fault events on the line from line faults. Set ELM to YE if you intend to monitor the line for fault precursors and you do not want the monitoring data to include faults.

Set ELM to YF to monitor the power line for faults. In this mode the line monitor locates, tabulates, and alarms for faults on the line. Configure the fault locator trigger, FL, to monitor the trip signal to the line circuit breaker. Remember that the SEL-T400L trip command is already included in the fault locator trigger. The line monitor uses the presence of the fault locator trigger to distinguish line faults from non-fault events. Set ELM to YF if you intend to monitor historical distribution of line faults to detect systemic problems on the line such as insufficient clearance, mechanical resonance of conductors due to insufficient damping, and so on. Monitoring the line for faults allows you to detect weak spots on the line that cause transient faults that are often not analyzed or reported because of successful autoreclosing.

Set ELM to Y to monitor both low-energy events and faults. The line monitor works independently in both relays of the scheme. Consider setting ELM to YE in one of the relays and ELM to YF in the other relay. The line monitor data set from the first relay will tabulate low-energy events related to potential faults, and the data set from the second relay will provide historical fault distribution along the line.

LMALARM

Use the LMALARM setting to specify the alarm threshold for the line. If you do not have any historical data to guide you, consider setting LMALARM to 3. There is a very low probability that three unrelated events would occur at the same location. The line monitor alarms if the event counter in one, two, or three adjacent 0.25 mi or km bins exceeds the alarm threshold. For a 100 mi line, the probability of a single event falling within three adjacent bins is 3 • 0.25/100 = 0.0075. The probability of three unrelated events with a uniform distribution of occurrence falling in the same three bins is therefore $(0.0075)^3 = 4.2 \cdot 10^{-7}$. Such a low probability of a false alarm warrants selecting LMALARM = 3 and initiating an inspection if the line monitor sets off an alarm.

Consider setting the LMALARM threshold to 1 or 2 for cable lines. These lines are not expected to experience any low-energy events. Instead, they may experience incipient faults. Therefore, consider examining the data even if the line monitor detects a single event, just as you would for a protection operation.

LMBL1 and LMBL2

Use the LMBL1 and LMBL2 settings to specify locations for which you do not want to alarm. Tapped lines may experience low-energy events due to switching operations associated with tapped loads or generators. These events may include switching events, restriking of the switching device, or commutation errors in power electronics associated with the tapped load or generator. Also, switching of in-line series capacitors will trigger the line monitor. Use as many as two blocking regions to exclude tap or series capacitor locations from alarming for line events. Use LMBL1 to specify the location of the first tap or series capacitor (distance from the relay in mi or km as per the LLUNIT setting). Use LMBL2 to specify the location of the second tap or capacitor.

You can also use the blocking regions to apply a different alarm threshold for cable sections on hybrid lines as explained later in this section (see *LMALRM1 and LMALRM2*).

LMBR1 and LMBR2

Use the LMBR1 and LMBR2 settings to specify the radius (in mi or km as per the LLUNIT setting) of the first and second blocking regions, respectively. The first blocking region spans from (LMBL1 – LMBR1) to (LMBL1 + LMBR1), and the second blocking region spans from (LMBL2 – LMBR2) to (LMBL2 + LMBR2). Follow the same setting guidelines as for the blocking regions of the TW87 scheme. The double-ended fault-locating method is typically accurate to within a tower span. A good practice is to set the radius to two or three tower spans to account for the locating error plus an additional 0.25 (mi or km) to account for rounding up the event location to the nearest line monitor bin.

LMALRM1 and LMALRM2

The line monitor counts events located within the blocking regions. When there is routine switching or other noise associated with the tapped load or generator or an in-line series capacitor, these counters would quickly reach their upper limit. Therefore, the line monitor resets all counters within the blocking regions at midnight on the relay clock, and by doing so, it monitors daily event totals for these locations. Use the LMALRM1 and LMALRM2 thresholds to set alarms for excessive daily event counts within the blocking regions. Use your operational data to select the alarm thresholds. For example, if your tapped transformer is equipped with an on-load tap changer that switches not more than 6 times a day, you can set the alarm threshold to 6, plus a margin, for a total of 10. You can also

inspect the line monitor data in the LINEMON.TXT file for actual event counts within the blocking regions around your line taps and use the historical data as the basis for setting the alarm thresholds.

You can also use the LMALRM1 and LMALRM2 thresholds to alarm for cable sections on a hybrid line. For example, you can use the first blocking region to span a cable section and set LMALRM1 to 1 to alarm on any event within that cable section, such as for an incipient cable fault. Setting LMALRM1 higher than 1 can limit the usefulness of monitoring because counters within the blocking regions reset daily. You can use a counter in your SCADA software to obtain a total count for cable events before taking action.

Line Monitor Outputs and Data

The line monitor provides the following user feedback and records the following data:

- For testing purposes, the front-panel LCD screen displays a message each time the line monitor triggers or asserts an alarm. The event trigger message displays the event location and the count for the corresponding bin. The alarm message displays the alarm location. The messages clear in 5 seconds.
- The LMEVE Relay Word bit pulses for 20 ms each time the line monitor triggers. You can use this bit to trigger an event record to capture the high-resolution voltages and currents for inspection and validation. The LMEVE bit has a latency not longer than 100 ms and therefore you should set prefault duration, PRE, in the event recorder to at least 100 ms when you use the LMEVE bit to capture an event record.
- The assertion of LMA, LMAB1, and LMAB2 Relay Word bits signifies an alarm for the line (LMA) and the two blocking regions (LMAB1 and LMAB2, respectively); see *Table 4.6*. Monitor these bits in your SCADA software to alert your line maintenance department. Remember that the event counters within the blocking regions autoreset at midnight, which deasserts the LMAB1 and LMAB2 Relay Word bits, if asserted. Latch these bits in your SCADA software. Reset the latched bits after understanding and attending to the problem at the alarm location. You can use the LMA, LMAB1, and LMAB2 bits to trigger an event record to capture the high-resolution voltage and current data for inspection and validation. These bits have a latency not longer than 100 ms and therefore you should set prefault duration, PRE, in the event recorder to at least 100 ms.
- The LMLOC, LMLOCB1, and LMLOCB2 analog values signify the location associated with the LMA, LMAB1, and LMAB2 alarms (see *Table 4.7*). Use these values when alerting your line maintenance department. Remember that with multiple alarm locations, the LMLOC, LMLOCB1, and LMLOCB2 analog values indicate the locations with the highest event count. Inspect counter values for the entire line before dispatching a line crew.
- The LMETOT analog value is the total number of events logged for the entire line (see *Table 4.7*).
- The **LIMO** command allows you to inspect the values of counters and the line monitor alarm status and clear selected counters after rectifying a problem on the line, such as after washing a dirty insulator or trimming encroaching vegetation.

➤ The LINEMON.TXT file contains all the line monitor counters and information regarding the most recent line monitor events. You can import this file into Microsoft Excel or similar software for plotting and analysis. The LINEMON.TXT file is located in the REPORTS directory in the relay.

Table 4.6 Line Monitor Relay Word Bits

Relay Word Bit	Description
LMEVE	Line monitoring new event detected[a]
LMA	Line monitoring alarm
LMAB1	Line monitoring Blocking Region 1 alarm
LMAB2	Line monitoring Blocking Region 2 alarm

[a] 20 ms pulse.

Table 4.7 Line Monitor Analog Values

Analog Value	Description	Unit
LMLOC	Line monitoring alarm location[a]	mi or km[b]
LMLOCB1	Line monitoring Blocking Region 1 alarm location[a]	mi or km[b]
LMLOCB2	Line monitoring Blocking Region 2 alarm location[a]	mi or km[b]
LMETOT	Line monitoring total event count[c]	count

[a] Location with the highest event count if the alarm condition is satisfied at multiple locations.
[b] Per LLUNIT setting.
[c] This counter may decrease at midnight when counters within the blocking regions autoreset.

Attending to Line Monitor Alarms and Inspecting Data

When the line monitor asserts an alarm (LMA, LMAB1, or LMAB2 Relay Word bit), retrieve and archive the LINEMON.TXT file (see *SEL-T400L File Directories on page 9.17*) and use the line monitor command (see *LIMO on page C.9*) to inspect and clear the counters at the alarm location.

The Line Monitoring History section of the LINEMON.TXT file in the REPORTS directory of the relay contains the line monitor counters and other relevant information (see *Figure 4.10* for an example). The report in *Figure 4.10* shows a total of 14 events and lists bin locations (first column) and associated counters (second column). The line in *Figure 4.10* has a weak spot at about 30.00 mi with 7 events at 30.00 mi, 2 events at 29.75 mi and 1 event at 30.25 mi. The third column shows the locations of Blocking Regions 1 and 2 marked as B1 and B2, respectively. In the example of *Figure 4.10*, the first blocking region spans from 34.50 mi to 36.00 mi.

NOTE: All the event counters within the blocking regions reset at midnight on the relay clock; however, the SEL-T400L retains the information in the line monitoring log.

To facilitate analysis, the Line Monitoring Log section of the LINEMON.TXT file shows details related to the latest line monitoring events recorded by the relay, as shown in *Figure 4.10*. The information includes the event record number containing the rising-edge of the LMEVE Relay Word bit, the assertion time of the LMEVE Relay Word bit, the event type ("LE" indicates a low-energy event and "F" indicates a fault event), the calculated location, the first TW arrival time stamps for the local and remote relays, and the incremented event counter. Any event that occurs in Blocking Region 1 is marked as B1, and any event that occurs in Blocking Region 2 is marked as B2. An event occurring in both regions is marked with B1 B2. The line monitoring log displays the 50 most recent events for the line and the 50 most recent events for the blocking regions. The relay clears the line monitoring log when you reset the event counters for the entire line

by issuing the **LIMO C** command. Additionally, when you change the LL setting while the line monitor is enabled (ELM = Y, YE, or YF), the relay clears the line monitor counters and line monitoring log.

You can import the LINEMON.TXT file into Microsoft Excel for analysis and plotting, and you can choose to archive the file to keep track of the line history.

You can access the file by using several methods:

- Use an FTP client, such as Windows Explorer, over an Ethernet connection and copy the file from the REPORTS directory.
- Use the **FILE READ REPORTS LINEMON.TXT** command to retrieve the file over the front-panel port.
- View the file and copy selected portions of it from the terminal window by using the **FILE SHOW REPORTS LINEMON.TXT** command.

```
SEL-T400L                                   Date: 2021/03/02  Time: 17:00:00.000
Station A                                   Time Source: HIRIG
                                            Serial Number: 1210610001

Line Monitoring History
Total number of events:     14
Location [mi]  Event Count
    0.25         0
    0.50         0
    0.75         0
    ...
   29.50         0
   29.75         2
   30.00         7
   30.25         1
   30.50         0
   30.75         0
   ...
   34.25         0
   34.50         0     B1
   34.75         0     B1
   35.00         0     B1
   35.25         0     B1
   35.50         0     B1
   35.75         0     B1
   36.00         0     B1
   36.25         0
   36.50         0
   ...

Line Monitoring Log
#        LMEVE_Time      Type    Location [mi]   TW_Time_Local   TW_Time_Remote  Count
10051    2021/03/02,16:25:02.1289        F       30.020  2021/03/02,16:25:02.079049957  2021/03/02,16:25:02.079264546   7
10050    2021/03/02,16:23:42.7439        LE      30.020  2021/03/02,16:23:42.693754875  2021/03/02,16:23:42.693969465   6
10049    2021/03/02,16:22:11.3369        LE      30.070  2021/03/02,16:22:11.286928747  2021/03/02,16:22:11.287142791   5
10048    2021/03/02,16:20:01.6440        LE      30.056  2021/03/02,16:20:01.594378406  2021/03/02,16:20:01.594592603   4
10047    2021/03/02,16:18:48.6860        LE      30.081  2021/03/02,16:18:48.635777600  2021/03/02,16:18:48.635991527   3
10046    2021/03/02,16:18:08.1919        LE      30.081  2021/03/02,16:18:08.142288456  2021/03/02,16:18:08.142502381   2
10045    2021/03/02,16:17:12.6179        LE      30.061  2021/03/02,16:17:12.567703227  2021/03/02,16:17:12.567917372   1
10044    2021/03/02,16:16:23.7479        LE      29.766  2021/03/02,16:16:23.698357319  2021/03/02,16:16:23.698574635   2
10043    2021/03/02,16:15:25.9730        LE      29.765  2021/03/02,16:15:25.922503175  2021/03/02,16:15:25.922720494   1
10042    2021/03/02,16:13:29.0549        LE      30.264  2021/03/02,16:13:29.024859725  2021/03/02,16:13:29.025071691   1
10038    2021/03/02,16:04:10.1620        LE      72.659  2021/03/02,16:04:10.132498588  2021/03/02,16:04:10.132255233   1
10037    2021/03/02,16:03:49.1070        LE      72.963  2021/03/02,16:03:49.077725527  2021/03/02,16:03:49.077478902   1
10036    2021/03/02,16:01:12.7680        LE      72.261  2021/03/02,16:01:12.739026284  2021/03/02,16:01:12.738787200   2
10035    2021/03/02,16:00:02.2159        LE      72.263  2021/03/02,16:00:02.186762494  2021/03/02,16:00:02.186523393   1
```

Figure 4.10 LINEMON.TXT File Example

When a line monitor alarm is asserted, issue the **LIMO** command and you will receive the following response:

```
=>limo

SEL-T400L                                   Date: 2021/03/02  Time: 17:00:00.000
Station A                                   Time Source: HIRIG
                                            Serial Number: 1210610001

Line Monitoring Alarm
Total number of events:     14

Alarm at location:  30.00 mi
Location [mi]   Event Count
   29.75          2
   30.00          7
   30.25          1
```

For the above example, issue the **LIMO 29 31** command to inspect more counters adjacent to the alarm location and you will receive the following response:

```
=>limo 29 31

SEL-T400L                                   Date: 2021/03/02  Time: 17:00:00.000
Station A                                   Time Source: HIRIG
                                            Serial Number: 1210610001

Line Monitoring Event Count
Total number of events:     14
Location [mi]   Event Count
   29.00          0
   29.25          0
   29.50          0
   29.75          2
   30.00          7
   30.25          1
   30.50          0
   30.75          0
   31.00          0
```

Dispatch your line crew to the location of 30.00 mi. Assume it is winter and your crew found insulators covered with salt residue deposited by wind from a nearby highway overpass. Assume the insulators have been washed at a convenient time. After the underlying problem has been rectified, you should reset the counters corresponding to the alarm location by issuing the **LIMO 29.75 30.25 C** command from Access Level 2:

```
=>>limo 29.75 30.25 c

Clear Line Monitoring event counters between  29.75 mi and  30.25 mi
Are you sure (Y/N)? y

Clearing Complete

=>>limo 29 31

SEL-T400L                                   Date: 2021/03/02  Time: 17:00:00.000
Station A                                   Time Source: HIRIG
                                            Serial Number: 1210610001

Line Monitoring Event Count
Total number of events:      4
Location [mi]   Event Count
   29.00          0
   29.25          0
   29.50          0
   29.75          0
   30.00          0
   30.25          0
   30.50          0
   30.75          0
   31.00          0
```

Note that you cleared 10 events and therefore the total event count went from 14 to 4. Clearing the counters at the alarm location resulted in deassertion of the LMA Relay Word bit (check using the **TAR LMA** command). If the LMA bit

stays asserted, it means an alarm is set for another location. Issue the **LIMO** command to confirm. If no alarm is present, you will receive the following response:

```
=>>limo

No line monitoring alarms
```

The **LIMO** command provides you with visibility into all three alarms: the line and the two blocking regions. For example, if all three alarms are asserted, you will receive the following response:

```
SEL-T400L                                   Date: 2021/03/02  Time: 17:00:00.000
Station A                                   Time Source: HIRIG
                                            Serial Number: 1210610001

Line Monitoring Alarm
Total number of events:     38

Alarm at location:  90.00 mi
Location [mi]   Event Count
   89.75          0
   90.00          3
   90.25          1

Blocking region 1
Alarm at location:  35.00 mi
Location [mi]   Event Count
   34.75          1
   35.00         10
   35.25          0

Blocking region 2
Alarm at location:  60.00 mi
Location [mi]   Event Count
   59.75          2
   60.00         15
   60.25          1
```

When no line monitoring alarms are present, you have finished attending to the line monitoring alarms.

This page intentionally left blank

SECTION 5

Fault and Event Recording

The SEL-T400L includes high-resolution, time-synchronized digital fault recorder (DFR) functionality. Use the DFR function in association with SEL-T400L protection elements and schemes, or in a standalone mode, to record power system faults and other phenomena such as switching events or breaker restrikes. Use these DFR records to perform post-fault system and relay operation analysis, or to analyze events other than internal faults for which the SEL-T400L restrained. The SEL-T400L includes a Sequential Events Recorder (SER)—which provides a time-stamped log of element state changes—that is useful for archiving power system and relay state changes including protection element responses, relay access attempts, settings changes, relay restarts, and relay diagnostics. The SEL-T400L also provides a reports directory containing event history, metering, diagnostics, and SER reports available for direct download in text file format.

This section is organized as follows:

- *Digital Fault Recording on page 5.1* describes the oscillography recording capabilities of the SEL-T400L (including DFR configuration settings, record content, and format) and provides instruction on how to retrieve the oscillography records from the relay.
- *Sequential Event Recording on page 5.18* discusses SER features and settings.
- *Report Records on page 5.21* describes the various reports stored in the relay REPORTS directory.
- *Analyzing Events With SYNCHROWAVE Event Software on page 5.22* provides information on the software you can use to view oscillography records from the relay, as well as examples of event analysis.

Digital Fault Recording

Ultra-High-Resolution and High-Resolution Records

The SEL-T400L provides a digital fault recording functionality with two types of records: ultra-high resolution (1 MHz sampling) and high resolution (10 kHz sampling). Both types of records are stored in IEEE C37.111-2013 COMTRADE format. The SEL-T400L stores as many as 50 events of both record types with a duration of as long as 1.2 seconds per event.

The SEL-T400L stores 1 MHz records with an MHR (Megahertz Record) tag. The MHR record contains voltage and current samples with 18 bits of resolution and an effective measurement bandwidth of about 400 kHz. The MHR record contains the raw three-phase W and X input currents and the raw three-phase voltages. You can use the MHR record to analyze any high-frequency power system event, such as breaker restrike for reactors, capacitor banks, generators, or otherwise stressed or marginally rated breakers. The 1.2-second recording capa-

bility allows recording of transients throughout the complete protection operation cycle, from fault inception, to breaker clearing, to the autoreclose instant. No digital signals (Relay Word bits) are included in the MHR record.

The SEL-T400L stores the 10 kHz records with a TDR (Time-Domain Record) tag. The TDR record contains samples with 20 bits of resolution and an effective measurement bandwidth of about 3 kHz. The TDR record contains the raw three-phase W and X input currents, the three-phase line currents, and the raw three-phase voltages. The TDR record also contains selected instantaneous signals calculated by the relay and used by the incremental-quantity protection elements (specifically, the incremental voltage and the incremental replica currents; see *Appendix G: Signal Processing* for more information). Lastly, the TDR record contains all the SEL-T400L Relay Word bits.

The SEL-T400L synchronizes the sampling instant for the MHR record with the top of the second from the internal clock and compensates for the analog filter group delays of both records when time-stamping the samples. When an optional high-accuracy IRIG-B time source is connected to the relay, the internal relay clock synchronizes the sampling instant to absolute time (see *Appendix H: High-Accuracy Timekeeping* for more information on time synchronization).

NOTE: In the event records, remote analogs are aligned with local analogs (i.e., aligned to the event record time) for ease of analysis; similarly, remote digitals are aligned with local digitals (i.e., aligned to the data consumption time).

When connected to another SEL-T400L at the other end of the protected transmission line through use of the direct point-to-point fiber-optic channel, the relay also includes the raw remote voltage and line currents in both the MHR and TDR records. The internal clocks of the two connected relays synchronize to each other to allow for precise alignment of remote samples with the local samples and for a common time base regardless of whether any external time sources are available to the relays. If at least one of the two relays is connected to a high-accuracy IRIG-B time source, then both relays reference their records to absolute time (see *Appendix H: High-Accuracy Timekeeping* for more information).

The high-frequency content recorded in the MHR record along with the analog and digital signals in the TDR record provide a complete view of the monitored line and the operation of the relay. The correlated time stamps between the two records allow for viewing of the high-frequency traveling-wave content recorded in the MHR record and verification of proper behavior and timing of the traveling-wave protection element digitals in the TDR record. The incremental-quantity protection elements can be thoroughly analyzed using the analog and digital signals stored in the TDR record. Use SEL-5601-2 SYNCHROWAVE Event Software to open both the TDR and MHR records and analyze both contents simultaneously.

Record Naming and Contents

Per the IEEE C37.111-2013 COMTRADE standard, both the MHR and TDR records comprise three files: a configuration (CFG), data (DAT), and header (HDR) file; where the three-letter abbreviations serve as the file extension type. The naming convention for each of these files conforms to the IEEE Std C37.232-2011, Common Format for Naming Time Sequence Data Files (COMNAME). All three files have the same name and are differentiated only by their extension type. The format for the record name is as follows:

yymmdd,hhMMssmmm,0t,aaaaa,bbbbb,cccc,ddd,nnnnn.ext

where:

yymmdd	is the record trigger date (2-digit year, month, and day)
hhMMssmmm	is the record trigger time (hours, minutes, seconds, milliseconds)

0t	indicates that the time stamp is the trigger time with a UTC offset of 0
aaaaa	is the last 5 characters of the Station Identifier (SID) setting
bbbbb	is the last 5 characters of the Relay Identifier (RID) setting
cccc	is the Company Name (CONAM) setting
ddd	is the record type (MHR or TDR)
nnnnn	is a unique event record number beginning at 10000 and incrementing for each new event record
ext	is file type (CFG, DAT, or HDR)

Configuration (CFG) File

The CFG file is a configuration file in an ASCII format that describes the content of the DAT file. The CFG file contains data such as sample rates, number of channels, system frequency, channel information, and instrument transformer ratios. *Figure 5.1* shows a sample CFG file for an MHR record, and *Figure 5.2* shows a sample CFG file for a TDR record. *Table 5.1* provides more information on the CFG data fields that are labeled in *Figure 5.1* and *Figure 5.2*.

```
SEL-T400L,FID=SEL-T400L-R104-V0-Z005004-D20210226,2013                    A
15,15A,0D                                                                 B
1,IAW,A,,A,0.012442268,0,0,-8388608,8388607,400.00,1.0,P
2,IBW,B,,A,0.012442268,0,0,-8388608,8388607,400.00,1.0,P
3,ICW,C,,A,0.012442268,0,0,-8388608,8388607,400.00,1.0,P
4,IAX,A,,A,0.012442268,0,0,-8388608,8388607,400.00,1.0,P
5,IBX,B,,A,0.012442268,0,0,-8388608,8388607,400.00,1.0,P
6,ICX,C,,A,0.012442268,0,0,-8388608,8388607,400.00,1.0,P
7,VA,A,,kV,0.00010597771,0,0,-8388608,8388607,3000.00,1.0,P
8,VB,B,,kV,0.00010597771,0,0,-8388608,8388607,3000.00,1.0,P                C
9,VC,C,,kV,0.00010597771,0,0,-8388608,8388607,3000.00,1.0,P
10,IAR,A,,A,0.012442268,0,0,-8388608,8388607,400.00,1.0,P
11,IBR,B,,A,0.012442268,0,0,-8388608,8388607,400.00,1.0,P
12,ICR,C,,A,0.012442268,0,0,-8388608,8388607,400.00,1.0,P
13,VAR,A,,kV,0.00010597771,0,0,-8388608,8388607,3000.00,1.0,P
14,VBR,B,,kV,0.00010597771,0,0,-8388608,8388607,3000.00,1.0,P
15,VCR,C,,kV,0.00010597771,0,0,-8388608,8388607,3000.00,1.0,P
60                                                                        D
1
1000000,200000                                                            E
02/03/2021,00:04:39.793634                                                F
02/03/2021,00:04:39.893633                                                G
BINARY32                                                                  H
1                                                                         I
0,-8                                                                      J
0,0                                                                       K
```

Figure 5.1 MHR COMTRADE .CFG File Data

```
SEL-T400L,FID=SEL-T400L-R104-V0-Z005004-D20210226,2013                    A

346,26A,320D                                                              B

1,IAW,A,,A,0.012442268,0,0,-8388608,8388607,400.00,1.0,P
2,IBW,B,,A,0.012442268,0,0,-8388608,8388607,400.00,1.0,P
3,ICW,C,,A,0.012442268,0,0,-8388608,8388607,400.00,1.0,P
4,IAX,A,,A,0.012442268,0,0,-8388608,8388607,400.00,1.0,P
5,IBX,B,,A,0.012442268,0,0,-8388608,8388607,400.00,1.0,P
6,ICX,C,,A,0.012442268,0,0,-8388608,8388607,400.00,1.0,P
7,IA,A,,A,0.012442268,0,0,-8388608,8388607,400.00,1.0,P
8,IB,B,,A,0.012442268,0,0,-8388608,8388607,400.00,1.0,P
9,IC,C,,A,0.012442268,0,0,-8388608,8388607,400.00,1.0,P
10,VA,A,,kV,0.00010597771,0,0,-8388608,8388607,3000.00,1.0,P
11,VB,B,,kV,0.00010597771,0,0,-8388608,8388607,3000.00,1.0,P
12,VC,C,,kV,0.00010597771,0,0,-8388608,8388607,3000.00,1.0,P
13,DIZA,A,,A,0.012442268,0,0,-8388608,8388607,400.00,1.0,P
14,DIZB,B,,A,0.012442268,0,0,-8388608,8388607,400.00,1.0,P                C1
15,DIZC,C,,A,0.012442268,0,0,-8388608,8388607,400.00,1.0,P
16,DIZ0,0,,A,0.012442268,0,0,-8388608,8388607,400.00,1.0,P
17,DVA,A,,kV,0.00010597771,0,0,-8388608,8388607,3000.00,1.0,P
18,DVB,B,,kV,0.00010597771,0,0,-8388608,8388607,3000.00,1.0,P
19,DVC,C,,kV,0.00010597771,0,0,-8388608,8388607,3000.00,1.0,P
20,IAR,A,,A,0.012442268,0,0,-8388608,8388607,400.00,1.0,P
21,IBR,B,,A,0.012442268,0,0,-8388608,8388607,400.00,1.0,P
22,ICR,C,,A,0.012442268,0,0,-8388608,8388607,400.00,1.0,P
23,VAR,A,,kV,0.00010597771,0,0,-8388608,8388607,3000.00,1.0,P
24,VBR,B,,kV,0.00010597771,0,0,-8388608,8388607,3000.00,1.0,P
25,VCR,C,,kV,0.00010597771,0,0,-8388608,8388607,3000.00,1.0,P
26,FREQ,,,Hz,1e-07,0,0,0,2147483647,1.00,1.0,P

1,UNUSED001,,,0
...
7,TRIPLED,,,0
8,EN,,,0
...                                                                       C2
293,TW87C,,,0
294,TW87B,,,0
295,TW87A,,,0
...
320,PLAY,,,0

60                                                                        D

1

10000,2000                                                                E

02/03/2021,00:04:39.793733                                                F

02/03/2021,00:04:39.893633                                                G

BINARY32                                                                  H

1                                                                         I

0,-8                                                                      J

0,0                                                                       K
```

Figure 5.2 TDR COMTRADE .CFG File Data

Table 5.1 Information Included in the CFG File (Sheet 1 of 2)

Data Item[a]	Description	Comments
A	Relay identifier, relay firmware identification string (FID), COMTRADE standard year	Relay identifier specified by RID setting.
B	Number and type of channels	The number and type of analog channels are fixed for MHR and TDR reports. Only the TDR record contains digitals.

Table 5.1 Information Included in the CFG File (Sheet 2 of 2)

Data Item[a]	Description	Comments
C	Channel name, units, conversion factors	MHR analog channels (C in *Figure 5.1*) are described in *Ultra-High-Resolution Fault Record on page E.1*. TDR analog channels (C1 in *Figure 5.2*) are described in more detail in *High-Resolution Fault Record on page E.3*. TDR digital channels (C2 in *Figure 5.2*) contain all SEL-T400L Relay Word bits. See *Appendix D: Relay Word Bits* for the complete list.
D	System frequency	As specified by the NFREQ setting.
E	Sample rate and number of samples	The MHR sample rate is fixed at 1 MHz. The TDR sample rate is fixed at 10 kHz. Number of samples is determined by the record length (LER) setting.
F	Date and time of first data point	The first data point, relative to the trigger point, is determined by the pretrigger length (PRE) setting. The time stamp is reported in UTC.
G	Date and time of trigger point	The trigger point is determined by the rising edge of ERTRIG (refer to *Figure 5.4*). The time stamp is reported in UTC.
H	Data file type	Refer to the IEEE C37.111-2013 COMTRADE standard for more information.
I	Time-stamp multiplication factor	
J	Time code and local code	Refer to the IEEE C37.111-2013 COMTRADE standard and *Appendix H: High-Accuracy Timekeeping* for additional information.
K	Time quality of samples	

[a] From *Figure 5.1* and *Figure 5.2*.

Data (DAT) File

The DAT file contains the values for each input channel for each sample in the record. The data are stored in a 32-bit binary format and conform to the COMTRADE binary standard. Refer to the IEEE C37.111-2013 COMTRADE standard for more information. SYNCHROWAVE Event Software supports viewing of the 32-bit binary format defined by the 2013 revision of the COMTRADE standard.

Header (HDR) File

The HDR file contains relay settings and event-related analog quantities (such as prefault and fault voltages and currents, fault type and location, etc.) helpful in analyzing power system events and relay operation. *Figure 5.3* shows a sample HDR file from an MHR record. Note that the HDR files for the MHR record and TDR record are identical except for the **Event_Report_Type** field (B in *Figure 5.3*). *Table 5.2* provides more information on the HDR data fields that are labeled in *Figure 5.3*.

```
FID,"FID=SEL-T400L-R104-V0-Z005004-D20210226"                                   A

Event_Report_Type,"MHR"                                                         B

[SUMMARY]
Event_Date,"2021/03/02"
Event_Time,"00:04:39.893"
Time_Source,"HIRIG"
Event_Number,"11005"
Frequency,"60.001"
Event_Type,"AG T"
Targets,"TD21 TD32 TW32 COMM"
Fault_Time,"00:04:39.8923"                                                      C
Fault_Location,"50.00(mi)"
Fault_Location_Method,"DE TW"
Prefault_IA_MAG(A),"550"
Prefault_IA_ANG(DEG),"-174.8"
Prefault_IB_MAG(A),"553"
Prefault_IB_ANG(DEG),"+65.1"
Prefault_IC_MAG(A),"539"
Prefault_IC_ANG(DEG),"-54.9"
...

[1]
CONAM,"CONM"
SID,"Station A"
RID,"T400L"
EADVS,"N"
NFREQ,"60"
PHROT,"ABC"                                                                     D
LINEI,"IW"
OPCS,"LINEI"
CTRW,"400"
CTRX,"400"
...

[Fault_Location]
SE_TW_Location1,"50.00(mi)"
SE_TW_Location2,"$$$$$$$(mi)"
SE_TW_Location3,"$$$$$$$(mi)"                                                   E
SE_TW_Location4,"$$$$$$$(mi)"
DE_TW_Location,"50.00(mi)"

SE_Z-Based_Location,"49.98(mi)"
DE_Z-Based_Location,"50.02(mi)"                                                 F

First_TW_Time_Local,"00:04:39.887132"
First_TW_Time_Remote,"00:04:39.887132"                                          G

[Event_Counters]
EVNTCNT,"2"                                                                     H
TRPCNT,"2"

[Additional_Parameters]

INOM,"5"                                                                        I

TWDSW,"10"                                                                      J

TWCPTR,"0.000"                                                                  K
```

Figure 5.3 MHR COMTRADE .HDR File Data

Table 5.2 Information Included in the HDR File (Sheet 1 of 2)

Data Item[a]	Description	Comments
A	Relay firmware ID	Relay firmware identification string.
B	Event report type	**MHR** for MHR records, **TDR** for TDR records.
C	Summary report data	The SUMMARY report in single-column format. Refer to *SUMMARY Report on page 5.10* for an explanation of data fields.

Table 5.2 Information Included in the HDR File (Sheet 2 of 2)

Data Item[a]	Description	Comments
D	Protection, Report, and Port settings	The Protection (1), Report (R), Port (P1, P2, P3, and P6) settings at the time of event archiving. If settings data changed during event archiving, `SETTINGS CHANGED DURING EVENT` will precede the settings data. A settings class with a checksum failure during archiving will be replaced with `INVALID EVENT DATA`.
E	TW-based fault location results	Includes fault location (Location 1) as well as the three highest-ranking alternatives from the single-ended TW-based fault-locating method. Also includes the fault location from the double-ended TW-based fault-locating method. The units are determined by the LLUNIT setting. Refer to *Section 4: Fault Locator and Line Monitor* for additional information. The double-ended fault location is only available if the direct point-to-point fiber-optic channel is installed.
F	Impedance-based fault location results	Includes the fault location from the single-ended impedance-based fault-locating method and the fault location from the double-ended impedance-based fault-locating method. The units are determined by the LLUNIT setting. Refer to *Section 4: Fault Locator and Line Monitor* for additional information. The double-ended fault location is only available if the direct point-to-point fiber-optic channel is installed.
G	First local and remote TW arrival time stamp	This is the first TW arrival time stamp at the local and remote terminal compensated for the secondary cable delay. Use *Equation 4.1 on page 4.7*, along with the LL and TWLPT settings, to calculate the fault location offline by using these time stamps. The remote time stamp is only available if the direct point-to-point fiber-optic channel is installed.
H	Event counters	EVNTCNT displays the number of assertions of the EVNTPKP Relay Word bit (see *Figure 6.14 on page 6.28*) and TRPCNT displays the number of assertions of the TRIP Relay Word bit. Refer to *Configuring the Event Report on page 6.27* for more information.
I	INOM	INOM is the relay nominal current (5 A or 1 A).
J	TWDSW	Fields used by SYNCHROWAVE Event. TWDSW is a parameter of the differentiator smoother filter that the SEL-T400L uses to measure TWs. The TWCPTR settings value is only available if the direct point-to-point fiber-optic channel is installed.
K	Remote relay TWCPT setting labeled as TWCPTR	

[a] From *Figure 5.3*.

Record Triggering and Configuration

NOTE: For every ERTRIG assertion, the relay will generate an MHR and TDR record.

The relay generates an MHR and TDR oscillography record for every assertion of ERTRIG. *Figure 5.4* shows the event report triggering logic. While the relay is enabled, the following conditions result in an assertion of ERTRIG:

- Assertion of any Relay Word bit in the event report trigger setting, ER (see *Table 5.3*)
- Assertion of the fault locator trigger, FLTRIG (see *Figure 4.3 on page 4.6*)
- Issuing a **TRIGGER** command (see *TRIGGER on page C.19*)
- Assertion of the TRIP Relay Word bit (see *Trip Logic on page 2.45*)
- Issuing a **PULSE** command (see *PULSE on page C.12*)

As shown in *Figure 5.4*, the logic does not accept new triggers until event recording finishes collecting data according to the post-trigger recording time, which is established by the difference between the length of the event report and the length of the pretrigger data (LER and PRE setting, respectively; see *Table 5.3*). The rising edge of ERTRIG establishes the trigger time of the record, stored with microsecond resolution. Each record is assigned a unique event record number beginning at 10000. Both the trigger time and the record number are reported in the MHR and TDR record name (see *Record Naming and Contents on page 5.2*), the CFG file (see *Table 5.1*), the SUMMARY report (see *Figure 5.6*), and the HISTORY report (see *Figure 5.7*).

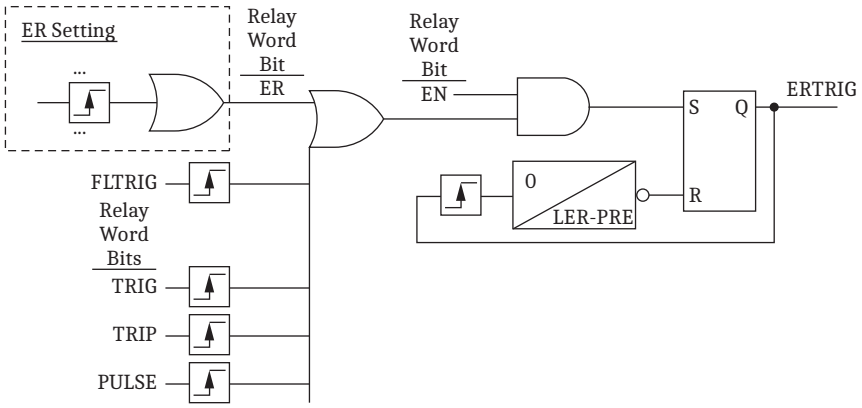

Figure 5.4 Event Report Triggering Logic

In the case of back-to-back event triggers, the length of pretrigger data in the subsequent event is determined by how soon a new ERTRIG assertion occurs after the previous event finished recording. Consequently, the pretrigger length may be shorter than the PRE setting, but the post-trigger length will increase such that the total event report length matches the LER setting (see *Figure 5.5*). The relay can store as many as three back-to-back 1.2-second event records. The event records are stored in nonvolatile memory, and the list of records stored in the relay is available in the HISTORY report (see *HISTORY Report on page 5.13* for additional information).

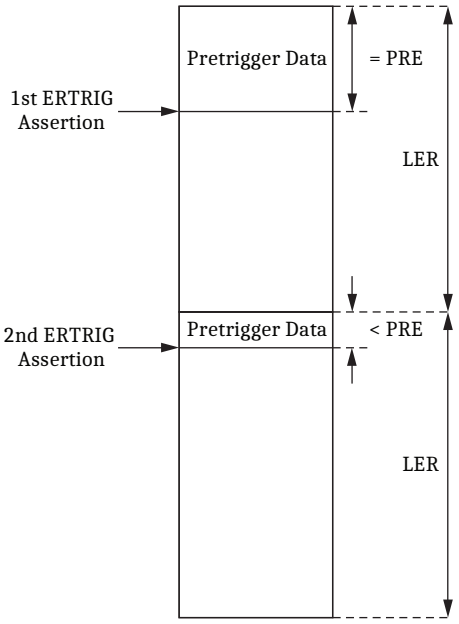

Figure 5.5 Pretrigger Length in Back-to-Back Recordings

Table 5.3 lists settings related to event recording. Refer to *Configuring the Event Report on page 6.27* for event recorder settings guidelines, including explanation of the default Relay Word bits in the ER setting, suggestions of other useful Relay Word bits for the ER setting, and guidelines on selecting the LER and PRE settings values. In addition to the settings shown in *Table 5.3*, standalone DFR applications also require you to configure the settings found in the Device Configuration, AC Inputs, and Line Configuration settings categories for your particular application. Refer to *Section 6: Settings Guidelines* for additional information.

Table 5.3 Event Reporting Settings

Name	Description	Range	Default
ER	Event report trigger (as many as 24 Relay Word bits)	All RWBs, NA	EVNTPKP, LOP, PTRXA, PTRXB, PTRXC, DINVLS
LER	Length of event report (seconds)	0.2–1.2	0.2
PRE	Length of pretrigger (seconds)	0.05–(LER – 0.1)	0.05

ER

Use the ER setting to specify conditions for triggering the SEL-T400L event recording function. Note that assertion of the ER bit triggers both the TDR and MHR records. Keep in mind that the assertion of the TRIP condition and triggering of the fault locator are included in the ER logic and you do not need to specify these conditions in the ER setting. In standalone DFR applications, use a digital input or a MIRRORED BITS input in the ER setting to trigger the event recorder. Use one of the TW-based Relay Word bits, such as TWDD, as a trigger when investigating switching events resulting in very small changes to the measured currents and voltages. Consider, however, that these Relay Word bits are very sensitive and may result in frequent triggering, which can fill the relay memory very quickly.

LER

Use the LER setting to specify the record length in seconds. This value includes both the pretrigger and post-trigger periods. Longer records require more memory to store, resulting in fewer records stored. Also, longer records take longer to retrieve. Balance your recording needs and available storage as well as the retrieval time when configuring the LER setting.

PRE

Use the PRE setting to specify the pretrigger length of the event record in seconds. The minimum settings value is 50 ms (i.e., 3 cycles at 60 Hz or 2.5 cycles at 50 Hz). Two or more cycles of pretrigger data allow you to accurately evaluate current and voltage magnitudes and angles. In a standalone recorder application, if you trigger from time-delayed or inherently slow protection elements, you may want to increase the PRE setting to ensure the record captures fault inception. For example, if you expect an external trigger 30 ms after the fault inception, you may want to set the PRE setting to 30 ms (external trigger time relative to the fault inception) + 50 ms (desired prefault data length) = 80 ms, or 0.08 seconds. Typically, you will configure recording for a few cycles of pretrigger data and reserve most of the event length (LER) to record the fault, fault clearing, and reclosing (such as for fault events assuming triggering from fast protection). In some cases, however, you may include more pretrigger data if you expect signal changes leading the event of interest but not necessarily asserting your ER trigger conditions.

SUMMARY Report

Each time the relay records an event, it also creates a summary report that contains key information about the event. Use the **SUMMARY** command (see *SUMMARY on page C.17*) to access this report information. Additionally, whenever a new event report is generated, the SUMMARY report is automatically transmitted to any open Telnet session if the Port 5 Telnet Configuration AUTO setting is set to Y (see *Telnet Protocol on page 9.6* for additional information). The SUMMARY report is also included in the HDR file of the MHR and TDR records (see *Figure 5.3*). *Figure 5.6* shows a sample SUMMARY report. *Table 5.4* explains the individual data items.

```
SEL-T400L                                   Date: 2021/03/02  Time: 16:21:16.358
Station A                                   Time Source: HIRIG
                                            Serial Number: 1210610001

Event Number: 10010           Frequency: 60.002
Event Type: CG T
Targets: TD21 TD32 TW32 COMM

Fault Time: 16:21:16.3560
Fault Location: 40.957 mi (SE Z)


PreFault:     IA     IB     IC    3I0    3I2       VA       VB       VC
MAG(A/kV)    205    209    209      4      8  307.682  307.847  306.984
ANG(DEG)   153.9   33.5  -87.4 -100.5  -48.1      0.0   -120.1    119.9

Fault:
MAG(A/kV)    285    104   1649   1534   1853  341.639  357.305   74.207
ANG(DEG)   171.3   37.6   27.5   34.5  153.6    -11.5   -110.6    117.9


                   Remote Currents                   Remote Voltages
PreFault:     IA     IB     IC    3I0    3I2       VA       VB       VC
MAG(A/kV)    232    233    231      4      7  319.281  319.560  319.773
ANG(DEG)    32.5  -88.8  151.3  120.6  118.2      2.1   -117.9    122.1

Fault:
MAG(A/kV)    355    204   1745   2081   1724  331.815  345.190  128.817
ANG(DEG)    30.7  -59.2   39.6   32.5  152.8     -3.9   -113.2    122.5

                                                                  ROK LBOK
MB:8->1    RMBP1     TMBP1     RMBP2     TMBP2     RMBP3     TMBP3  123  123
  TRIG  00000100  00100100  00000000  00100100  00000000  00100100  100  000
  TRIP  00000100  00100100  00000000  00100100  00000000  00100100  100  000
```

Figure 5.6 Sample SUMMARY Report

Table 5.4 Information Included in the SUMMARY Report (Sheet 1 of 3)

Data Item	Description	Comments
Date	Date and time of event capture	Corresponds to the date and time of the rising edge of ERTRIG (see *Figure 5.4*). Correlates with the date and time fields in the MHR and TDR record name as well as the HISTORY report.
Time		
Event Number	Unique event record number	Number between 10000 and 65535. Correlates with the event number field in the MHR and TDR record name as well as the # column of the HISTORY report.
Event Type	Indicates the mechanism that generated the event record	Event Type will display one of the following items: `AG`, `BG`, `CG`, `AB`, `BC`, `CA`, `ABG`, `BCG`, `CAG`, or `ABC`: For event records generated by TRIP or FLTRIG, the item indicates faulted phase involvement based on fault-type identification logic and trip logic phase selection. `T` is appended to the end if the TRIP Relay Word bit asserted during the event record. `TRIP`: Indicates that the event record includes the TRIP Relay Word bit and faulted phase involvement logic is indeterminate (`TRIP` has priority over `FL` and `ER`).

Table 5.4 Information Included in the SUMMARY Report (Sheet 2 of 3)

Data Item	Description	Comments
		FL: Indicates that the event record includes FLTRIG and faulted phase involvement logic is indeterminate (FL has priority over ER). ER: Indicates an event record generated by assertion of any Relay Word bit configured in the ER setting. TRIG: Indicates an event record generated by the **TRIGGER** command (TRIG has priority over TRIP, FL, and ER). PULSE: Indicates an event record generated by the **PULSE** command (PULSE has priority over TRIP, FL, and ER).
Targets	Protection element and scheme targets involved in the event record	TD21, TD32, TW32, TW87, COMM, LOP: These targets correspond to the identically named target LEDs on the relay front panel and are listed if they appear on the last row of the event record and the TRIP Relay Word bit is present in the record. See *Status and Target LEDs on page 8.10* for additional information.
Frequency	System frequency	Reports the measured system frequency in hertz at the time of the event trigger. See *Frequency on page G.11* for additional information.
Fault Time	Time of fault	This is the assertion time of the TD50DH Relay Word bit. This time stamp differs from the event report trigger time stamp determined by ERTRIG. **Note:** This field is only included if the event record contains assertion of the START Relay Word bit.
Fault Location	Fault location result with units determined by the LLUNIT setting and fault-locating method	This is the most accurate fault location result among the four possible fault-locating methods. If a fault location calculation was not possible, $$$$$$$ is displayed. See *Section 4: Fault Locator and Line Monitor* for more information. **Note:** This Field is only included if an event record contains assertion of the START Relay Word bit.
Prefault Quantities	Local prefault currents and voltages	Values reported in primary A and kV. See *Section 4: Fault Locator and Line Monitor* for additional information. **Note:** These fields are only included if an event record contains assertion of the START Relay Word bit.
Fault Quantities	Local fault currents and voltages	

Table 5.4 Information Included in the SUMMARY Report (Sheet 3 of 3)

Data Item	Description	Comments
Remote Prefault Quantities	Remote prefault currents and voltages	Values reported in primary A and kV. See *Section 4: Fault Locator and Line Monitor* for additional information. **Note:** These fields are only included if an event record contains assertion of the START Relay Word bit and the TW87OK Relay Word bit was asserted at the event-trigger time.
Remote Fault Quantities	Remote fault currents and voltages	
MB Status (Trigger)	MIRRORED BIT status at time of event report trigger	Status includes state of the receive and transmit bits as well as the channel monitor bits for MIRRORED BITS Ports 1–3. See *MIRRORED BITS Communications on page 3.5* for additional details. **Note:** The TRIP row is only included if an event record contains an assertion of the TRIP Relay Word bit.
MB Status (Trip)	MIRRORED BIT status at time of TRIP Relay Word bit assertion	

HISTORY Report

NOTE: A compressed version of the HISTORY report is available in comma-delimited format via the **CHISTORY** command for ease of machine parsing. See *SEL Compressed ASCII Commands on page 9.9* for additional information.

The HISTORY report provides the complete list of event records stored in the relay. Use the **HISTORY** command (see *HISTORY on page C.8*) to access this report information. *Figure 5.7* shows a sample HISTORY report, and *Table 5.5* explains the individual data items. The event records are listed newest to oldest (i.e., in descending order).

```
SEL-T400L                                   Date: 2017/03/15  Time: 08:15:00:342
Station A                                   Time Source: HIRIG
                                            Serial Number: 1170231369

#        DATE        TIME     EVENT   LOCAT  CURR  FREQ TARGETS
15035 2017/03/15 07:43:18.822 ABC T   40.97  2715 60.00 TD21 TD32 COMM TW87
15034 2017/03/15 07:42:51.705 ABG T  102.35  1073 60.00 TD32 TW32 COMM
15033 2017/03/15 07:41:25.969 BC T   102.24  1076 60.00 TD32 TW32 COMM
15032 2017/03/15 07:39:42.655 BC T     4.31  3992 60.00 TD21 TD32 COMM TW87
15031 2017/03/15 07:26:05.776 CG T    73.47  1193 60.00 TD21 TD32 TW32 COMM TW87
15030 2017/03/14 13:42:10.233 CA T    53.54  2311 60.00 TD21 TD32 COMM TW87


=>>
```

Figure 5.7 Sample HISTORY Report

Table 5.5 Information Included in the HISTORY Report (Sheet 1 of 2)

Data Item	Description	Comments
#	Unique event record number	Number between 10000 and 65535. Correlates with the event number field in both the MHR and TDR record name and the SUMMARY report.
DATE	Date and time of event capture	Corresponds to the date and time of the rising edge of ERTRIG (see *Figure 5.4*). Correlates with the date and time fields in both the MHR and TDR record name and the SUMMARY report.
TIME		

Table 5.5 Information Included in the HISTORY Report (Sheet 2 of 2)

Data Item	Description	Comments
EVENT	Indicates the mechanism that generated the event record	See **Event Type** row in *Table 5.4* for a description of possible values and their meaning.
LOCAT	Fault location result in units determined by the LLUNIT setting	The calculated fault location. If fault location calculation was not possible, `$$$$$$$` will be displayed. See *Section 4: Fault Locator and Line Monitor* for more information.
CURR	Maximum phase fault current measured during event	Value reported in primary A. Corresponds to the maximum phase current from the Fault Quantities row of *Table 5.4*. A value larger than 99999 will be displayed as `$$$$$`.
FREQ	System frequency	Reports the measured system frequency in hertz at the time of the event trigger. See *Frequency on page G.11* for additional information.
TARGETS	Protection element and scheme targets involved in the event record	See **Targets** row in *Table 5.4* for a description of possible values. A maximum of five targets will be displayed.

Event Storage Capacity

Table 5.6 lists the relay event storage capacity for a few sample event report lengths. For example, if LER = 0.2 seconds, the relay can store 300 event records (300 MHR records and 300 TDR records). The records are stored in nonvolatile memory.

Table 5.6 Event Storage Capacity

Event Length (LER Setting) in Seconds	Event Record Capacity[a]
0.2	300
0.7	90
1.2	50

[a] The relay is guaranteed to hold at least the capacity listed when storing records of a single event length.

Each event record receives a unique event record number between 10000 and 65535, incrementing for each new record, and restarting at 10000 after record number 65535. Note that upon deletion of the event records from the relay memory (see **HIS C** in *HISTORY on page C.8*), the event record numbering does not reset, but continues to increment sequentially. For example, if the largest event record number stored in the relay is 10120 and the event records are deleted, the next event record to be generated receives an event number of 10121, and a subsequent HISTORY response shows only the single 10121 record stored in the relay.

NOTE: Deleting event records via the **HIS C** command does not reset event record numbering.

Once the event record reaches capacity, each new record the relay generates results in the oldest event record being overwritten. This loss of the oldest record is reflected in the HISTORY response, because it no longer appears in the response. Establish an automated event retrieval system between the relay and a client if event report loss as a result of overwriting is a concern.

Event Retrieval and Deletion

The SEL-T400L supports the following file transfer protocols that can be used to retrieve events stored in relay memory:

- File Transfer Protocol (FTP) through an FTP client established via a Port 5 TCP/IP connection (see *File Transfer Protocol on page 9.4*)
- Ymodem through a terminal session established via a Port 5 Telnet connection (see *Telnet Protocol on page 9.6*)
- Ymodem through a terminal session established via a Port F USB connection (see *Communications Setup on page 8.42*)

Event files can be retrieved from the relay either manually or automatically. The most common manual event retrieval methods are as follows:

- ACSELERATOR QuickSet SEL-5030 Software (see *PC Software on page 8.14*)
- A terminal emulator (e.g., HyperACCESS, PuTTY, Tera Term)
- An FTP client (e.g., Microsoft Windows File Explorer, FileZilla, FireFTP)

The most common automatic event retrieval methods are as follows:

- ACSELERATOR TEAM SEL-5045 Software (see selinc.com/products/5045/)
- An SEL-3530 Real-Time Automation Controller (RTAC; see selinc.com/products/3530/)

Table 5.7 lists all of the event retrieval methods and indicates their file transfer protocol capabilities. Descriptions of how to retrieve events through use of each method follow *Table 5.7*.

Table 5.7 Event Retrieval Methods and Their Supported Protocols

Method	FTP	Ymodem-Telnet	Ymodem-USB
Manual Retrieval			
QuickSet	×	×	×
Terminal Emulator		×	×
FTP Client	×		
Automatic Retrieval			
TEAM	×	×	×
SEL RTAC		×	

Manual Retrieval Methods

QuickSet

As shown in *Table 5.7*, QuickSet provides the most flexibility for manual event retrieval.

The most efficient way to download events in QuickSet is via FTP over Port 5. To use this method, perform the following steps (these steps assume the relay has already been properly set for basic Ethernet communications; if not, refer to *Communications Setup on page 8.42*):

1. Ensure the relay FTP server for the relay is properly enabled and set (see *Table 9.3 on page 9.4*).
2. Follow the steps in *Establishing Communication With an SEL-T400L Over Ethernet Port 5 on page 8.49*, but when choosing the **File Transfer Option** shown in *Figure 8.44*, select **FTP**.
3. To view, select, and save events, follow the steps outlined in *Tools > Events on page 8.30*.

If a Port 5 connection between the SEL-T400L and QuickSet is not possible, download the events through use of a Port F USB connection. To use this method, perform the following steps (these steps assume that the proper USB drivers have already been installed; if not, refer to *Communications Setup on page 8.42*):

1. Follow the steps in *Establishing Communication With an SEL-T400L Over Front-Panel USB Port F on page 8.44* to enable a USB connection with QuickSet.
2. To view, select, and save events, follow the steps outlined in *Tools > Events on page 8.30*.

Terminal Emulator

Perform the following steps to use a third-party terminal emulator to manually download event reports (these steps assume that the proper USB drivers have already been installed and the relay has been properly set for basic Ethernet communications; if not, refer to *Communications Setup on page 8.42*):

1. Establish a connection between the SEL-T400L and the terminal software.
   a. For USB communications, follow the steps on *Using a Terminal Emulator on page 8.45*.
   b. For Telnet communications, follow the steps on *Using a Terminal Emulator on page 8.50*.
2. At the terminal, use the **FILE DIR EVENTS** command to display the contents of the EVENTS directory. The contents will match that of the HISTORY report, but will show all six files attached to each unique event record number (i.e., the CFG, DAT, and HDR files for both the TDR and MHR records).
3. At the terminal, use the **FILE READ EVENTS *filename.ext*** command (where *filename* is the name of the file, and *ext* is CFG, DAT, or HDR) to prepare the relay to send the specified file. Use the terminal emulator receive file functionality, with the transfer protocol set to YMODEM, to initiate the file transfer from the relay. Note that at a minimum, you will need to download the CFG and DAT file for a given record (TDR or MHR) in order for waveform-viewer software

(such as SYNCHROWAVE Event) to be able to open the record file. The HDR file is not required for viewing the waveforms, but it provides important event information and allows for several convenient, automated features in SYNCHROWAVE Event (see *Analyzing Events With SYNCHROWAVE Event Software on page 5.22*).

FTP Client

To use an FTP client to manually download event reports, refer to *File Transfer Protocol on page 9.4* for instructions on enabling the FTP server in the relay. See *SEL-T400L File Directories on page 9.17* for explanation of the directory structure of the relay and the location of the event records. Use any FTP client such as Windows Explorer to browse and copy the event files.

Automatic Retrieval Methods

TEAM Software

TEAM communicates with the relay through use of a Port 5 or Port F connection and can be used to automatically poll the relay for event reports at a specified interval, collect any new events, and store them in a specified location (collecting TDR records, MHR records, or both). TEAM can retrieve the events through use of either FTP or the Ymodem file transfer protocol. See the *ACSELERATOR TEAM SEL-5045 Software Instruction Manual* for additional information.

SEL RTAC

The SEL RTAC communicates with the relay through use of a Port 5 connection and can be used to automatically poll the relay for event reports at a specified interval and store any new events to its internal memory (collecting both the TDR and MHR records). Additionally, the SEL RTAC listens for the Port 5 automatic SUMMARY messages from the relay indicating a new event record, and immediately begins to retrieve the new files when the automatic message is sent (see *Telnet Protocol on page 9.6* for information on enabling automatic messages in the relay). The SEL RTAC can only retrieve the events through use of the Ymodem file transfer protocol. See the *SEL-3530 Real-Time Automation Controller (RTAC) Instruction Manual* for additional information.

Event Download Times

SEL-T400L event files can be very large. Carefully consider the corresponding download time when choosing a file transfer method for retrieving events. *Table 5.8* lists the time it takes to download a single TDR or MHR record with the default event report length of 0.2 seconds for each of the three file transfer methods. As shown in *Table 5.8*, FTP downloads are approximately 10 times faster than both of the Ymodem file transfer options. Additionally, TDR record downloads are approximately 40 times faster than MHR record downloads. Note that download times increase proportionally for longer event report lengths and are significant for the maximum report length when using Ymodem. SEL recommends using FTP for event retrieval. *Table 5.9* lists the time it takes to download a single TDR or MHR record through use of FTP for three different event report lengths: the minimum length (0.2 seconds), a mid-range length (0.7 seconds), and the maximum length (1.2 seconds).

NOTE: SEL recommends using FTP over Port 5 for retrieving event reports.

Table 5.8 File Transfer Method Download Times for TDR and MHR Records With LER = 0.2 s

Method	TDR	MHR
FTP	2 s	1 min 20 s
Ymodem over TELNET	22 s	13 min 30 s
Ymodem over USB	25 s	14 min 30 s

Table 5.9 FTP Download Times for TDR and MHR Records of Various Lengths

Report Length	TDR	MHR
LER = 0.2 s (minimum)	2 s	1 min 20 s
LER = 0.7 s	8 s	5 min
LER = 1.2 s (maximum)	13 s	8 min

Because of the large variation in event download times depending on the file transfer protocol used, consider the following when selecting one of the methods from *Table 5.7* to retrieve event records from the relay:

- Event report length—Longer event records (LER setting) result in longer download times.
- Record resolution—If your application only needs access to the TDR record and the MHR record will be ignored, download times will be fairly short. However, if the MHR (or both MHR and TDR) records are needed, download times will be significantly longer.
- Frequency of event report generation—Considering your ER and LER settings, estimate how soon you will reach the event record capacity (*Table 5.6*) to determine how often you need to download event records before event records are overwritten. This consideration especially applies to bench-testing and frequent triggering during onsite troubleshooting activities.

Event Deletion

Issue a **HIS C** command via any terminal session to clear all event records from the relay memory (see *HISTORY on page C.8*). Type **Y <Enter>** at the resulting confirmation prompt to complete the event record deletion.

Sequential Event Recording

SER Report

The Sequential Events Recorder (SER) provides detailed information on relay states and relay element and scheme operation in a report format. The SER captures and time-stamps state changes of Relay Word bits you specify. You can specify as many as 96 Relay Word bits (SER digital points, see *Table 5.11*). The SER also time-stamps selected relay conditions, some of which include turn-on/restart, settings changes, relay time source changes, and SER archive clearing (see *Table C.27* for a complete list of conditions). The SER runs at a 10 kHz rate along with the 0.1 ms protection processing (see *Figure G.1*), and the time-stamping of the state changes is reported with 100 µs resolution. The time-stamping of the state changes reported in the SER aligns with the time stamps of

NOTE: An alternative SER report format is SEL Fast SER, a binary machine-to-machine protocol that allows for unsolicited SER data. See *SEL Fast Meter and SEL Fast SER Protocols on page 9.15* for more information on this format.

the corresponding digital channels found in the TDR record. The SER stores as many as 10,000 records in nonvolatile memory before new records begin overwriting the oldest report records.

Use the **SER** command (see *SER on page C.13*) to access the SER report information. *Figure 5.8* shows a sample SER report. *Table 5.10* explains the individual data items.

```
SEL-T400L                                   Date: 2017/03/12  Time: 08:41:59.326
Station A                                   Time Source: Remote HIRIG
                                            Serial Number: 1170231369

FID=SEL-T400L-R100-V0-Z001001-D20170321     CID=5E08

#       DATE        TIME           ELEMENT              STATE
26    2017/03/12  04:22:55.0908   SER archive cleared
25     Invalid Data
24    2017/03/12  04:50:41.9085   ROKP1 Deserted
23    2017/03/12  04:50:41.9185   ROKP1 Asserted
22    2017/03/12  04:50:41.9285   ROKP1 Deasserted
21    2017/03/12  04:50:41.9385   ROKP1 Asserted
20    2017/03/12  04:50:41.9485   ROKP1 Auto-Removed
19    2017/03/12  04:51:41.2155   ROKP1 Auto-Reinstated
18    2017/03/12  04:51:41.2155   ROKP1 Asserted
17    2017/03/12  05:52:08.3795   Time Source: Free Running
16    2017/03/12  05:52:08.6306   Time Source: Remote HIRIG
15    2017/03/12  05:52:43.3794   Settings changed
14    2017/03/12  05:53:30.2112   CAARM                Asserted
13    2017/03/12  05:53:30.2112   ABARM                Asserted
12    2017/03/12  05:53:30.2112   AGARM                Asserted
11    2017/03/12  05:53:30.4501   START                Asserted
10    2017/03/12  05:53:30.4501   AGFLT                Asserted
9     2017/03/12  05:53:30.4508   TD32F                Asserted
8     2017/03/12  05:53:30.4508   TD32FA               Asserted
7     2017/03/12  05:53:30.4626   AGARM                Deasserted
6     2017/03/12  05:53:30.4634   CAARM                Deasserted
5     2017/03/12  05:53:30.4634   ABARM                Deasserted
4     2017/03/12  05:53:30.4652   START                Deasserted
3     2017/03/12  05:53:30.4652   TD32F                Deasserted
2     2017/03/12  05:53:30.4652   TD32FA               Deasserted
1     2017/03/12  05:53:30.4653   AGFLT                Deasserted
```

Figure 5.8 Sample SER Report

Table 5.10 Information Included in the SER Report

Data Item	Description	Comments
#	SER record number	The oldest record has the highest number. The newest record is always record 1. See *SER on page C.13* for report ordering options.
DATE	Date and time of SER record occurrence	The record time stamp is given in the local relay date and time with 100 µs resolution.
TIME		
ELEMENT	Relay Word bit or condition involved in record	See *Appendix D: Relay Word Bits* for element descriptions. See *Table C.27* for condition descriptions.
STATE	Relay Word bit state	Asserted or Deasserted.

Use the SER report for diagnosing relay behavior as well as for testing and commissioning the relay. For example, the SER report shown in *Figure 5.8* was captured during bench-testing of the A-phase incremental-quantity directional element for which a test set was used to apply a forward A-phase single-line-to-ground fault to the relay. The SER was configured to include the appropriate Relay Word bits that feed into the TD32 logic (see *Figure 2.9*). When the prefault signals were applied with the test set, the supervising ARM Relay Word bits asserted. Upon application of the fault, the SER logs the assertion of the START Relay Word bit, which asserts at the first sign of a change in the line current,

along with the appropriate faulted-loop identification logic (in this case, the AGFLT Relay Word bit). The assertion of START releases the TD32 restraining torque integrators while the assertion of AGFLT releases the operating-torque integrator. When the operating torque exceeds the forward restraining torque (700 µs later), the SER captures the assertion of the TD32FA and overall TD32F Relay Word bits, indicating proper detection of a forward fault on the A-phase and restraint of the other directional elements.

If the relay retrieves an SER record from nonvolatile memory that does not match its checksum, the relay displays `Invalid Data` for that record. If the SER report is full (10,000 records maximum) and the relay generates new SER records upon your ordering of an SER report in descending order (from newest record to oldest record), the relay stops displaying SER records and instead displays `Command aborted, data overwrite occurred`.

Issue an **SER C** command via any terminal session to clear all SER records from the relay memory (see *SER on page C.13*). Type **Y <Enter>** at the confirmation prompt to complete the record deletion. The relay will delete all records and add a single record to the SER report indicating `SER archive cleared`.

Record Configuration

SER1, SER2, SER3, and SER4

Table 5.11 lists the settings related to the SER. The SER points are divided into four different groups to allow for logical grouping and standardization across different lines and applications. State changes of any Relay Word bits appearing in settings SER1, SER2, SER3, or SER4 are displayed within the same SER report. Refer to *Configuring the Sequential Events Recorder on page 6.25* for settings guidelines related to the SER and comments on the default Relay Word bits loaded in the SER.

The SER also includes an automatic deletion and reinsertion function. The relay automatically deletes oscillating SER points from the SER. This function prevents overflow of the SER memory buffer and report as a result of chattering information.

ESERDEL, SRDLCNT, and SRDLTIM

Set SER setting ESERDEL (Enable SER Delete) to Y to enable this function, and select values for settings SRDLCNT (SER Delete Count) and SRDLTIM (SER Delete Time) that mask the chattering SER point. Once a point has changed state more than SRDLCNT times in an SRDLTIM period, the relay removes any new assertions of that point from the SER and gives the `Auto-Removed` message (see *Table C.27*) in the report. Once these new assertions are removed from the SER report, the relay waits for a time period of 10 • SRDLTIM. At the end of this period, the relay checks the chatter criteria and, if the point does not exceed the criteria, the relay automatically reinserts the point into the SER report along with the `Auto-Reinstated` message. The SER Report shown in *Figure 5.8* provides an example of the ROKP1 Relay Word bit chattering, being automatically removed from the report, and then being reinstated. To see a list of presently deleted SER points, enter the **SER D** command.

Table 5.11 SER Points and Chatter Criteria Settings

Name	Description	Range	Default
SER1	Sequential Events Recorder 1 (as many as 24 Relay Word bits)	All RWBs, NA	TPA, TPB, TPC, TD21P, TD21G, TD32F, TD32R, TW87, START, TDOUT, BLK, ALPARM
SER2	Sequential Events Recorder 2 (as many as 24 Relay Word bits)	All RWBs, NA	KEYA, KEYB, KEYC, PTRXA, PTRXB, PTRXC, DTRXA, DTRXB, DTRXC
SER3	Sequential Events Recorder 3 (as many as 24 Relay Word bits)	All RWBs, NA	LOP, OPA, OPB, OPC, ROKP1, ROKP2, ROKP3, TW87OK, FREQOK, TIRIG
SER4	Sequential Events Recorder 4 (as many as 24 Relay Word bits)	All RWBs, NA	LMEVE, LMA, LMAB1, LMAB2, VILEMI, ILREMI, SALARM, HALARM, PULSE
ESERDEL	Auto-removal of chattering SER points	Y, N	N
SRDLCNT	Number of counts before automatic removal	2–20	5
SRDLTIM	Time for automatic removal (seconds)	0.1–30.0	0.5

Report Records

The SEL-T400L includes a REPORTS directory containing event history, metering, and SER reports available for direct download in text format. These reports are a convenient way to capture metering or SER information in a readable format for record archiving. The REPORTS directory contains the following text files:

- CHIS.TXT (see *CHISTORY Report on page 9.12*)
- HIS.TXT (see *HISTORY Report on page 5.13*)
- MET.TXT (see *Verifying Voltage and Current Inputs on page 11.48*)
- SER.TXT (see *SER Report on page 5.18*)

These files contain content identical to the corresponding reports. When you retrieve a file from the REPORTS directory, the relay executes the corresponding command to produce the most recent data, places these data in the file, and provides the file to you.

When using an FTP client, browse to the REPORTS directory and copy the files you want to your SCADA/HMI computer. When interfacing with the relay through a terminal session, use the **FILE DIR REPORTS** command to display the contents of the REPORTS directory and the **FILE READ REPORTS *filename*.TXT** command to prepare the relay to send the specified file. See *DNP3 LAN/WAN Protocol on page 9.3* for additional information on the REPORTS directory.

Analyzing Events With SYNCHROWAVE Event Software

Overview

Use SYNCHROWAVE Event to view and analyze the oscillography records generated by the SEL-T400L. SYNCHROWAVE Event provides great flexibility in viewing the analog and digital data stored in the records. For example, you can perform the following:

- Create customized views of record data and save the views as standard templates.
- Quickly view key event summary information and relay settings.
- Create custom calculations to analyze protection operations.
- Overlay and align MHR and TDR records from a single relay or records from several relays.
- Perform a Bewley lattice diagram analysis of traveling-wave currents and voltages.

NOTE: The SEL-T400L event records are stored in the Binary32 data format defined by the 2013 revision of the COMTRADE standard. SYNCHROWAVE Event supports the 2013 revision.

Obtaining the Software

SYNCHROWAVE Event can be obtained at selinc.com/products/5601-2/. A 60-day trial period allows evaluation of the software with its full functionality. Once the trial period expires, functionality is limited to only analog and digital charts until a license is purchased and activated. See the *SYNCHROWAVE Event Software Instruction Manual* for additional installation information. Use the SEL Compass Software (available at selinc.com/products/compass/) to receive alerts about any newer version of SYNCHROWAVE Event software. The **Updates** tab in SEL Compass displays a listing of any version of SYNCHROWAVE Event newer than your current version. The **Changes** tab at the bottom of the SEL Compass screen displays a listing of all software changes for the current version and all previous versions.

Event Record Analysis Examples

The following examples illustrate oscillography record analyses and demonstrate several features of SYNCHROWAVE Event:

- *Example 5.1 Analyzing TDR Records*
- *Example 5.2 Analyzing MHR Records*
- *Example 5.3 Viewing MHR Record Bewley Lattice Diagrams*

Example 5.1 Analyzing TDR Records

Figure 5.9 shows a sample TDR record. This event record resulted from a TRIP condition the relay issued for an in-zone A-phase single-line-to-ground fault. The event information shown in the upper-right pane is a selection of the information the software pulls from the record name and from the relay SUMMARY report (see *Figure 5.6* and *Table 5.4*) if the HDR file for that record was saved. Click **Relay Settings** in the upper-right pane to display the contents of the events HDR file, which contains all relay settings (see *Figure 5.3* and *Table 5.2*).

Example 5.1 Analyzing TDR Records (Continued)

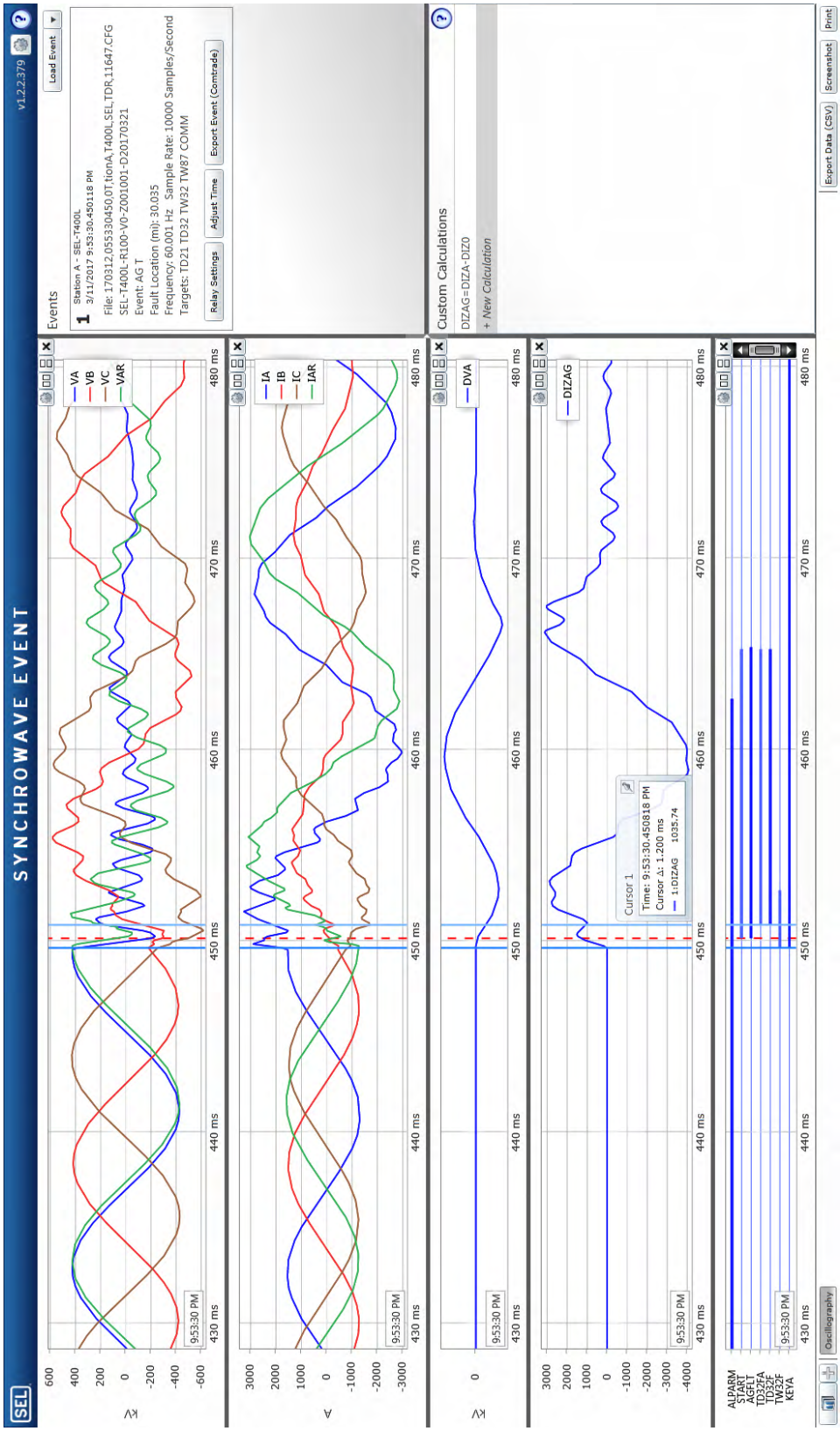

Figure 5.9 TDR Record Capturing a Forward A-Phase Fault

Example 5.1 Analyzing TDR Records (Continued)

For the analog channels, the raw line voltage and raw line currents are plotted as the top two analog charts shown in *Figure 5.9*. For this particular record, the direct point-to-point fiber-optic channel is installed, so the remote A-phase voltage and line current are plotted as well (**VAR** and **IAR** in the top two charts, respectively).

In this example, we are interested in observing how the incremental-quantity directional element, TD32, responded to this A-phase fault. As shown in *Figure 2.9*, the A-phase TD32 element uses the AG-loop incremental replica current, DIZAG, and the AG-loop incremental voltage, DVAG. The TDR record stores the A-phase incremental replica line current, DIZA; the zero-sequence incremental replica current, DIZ0; and the A-phase incremental line voltage, DVA (see *Table E.2*). The AG loop uses the A-phase incremental line voltage as its loop voltage and the difference between the A-phase incremental replica line current and zero-sequence incremental replica line current (see *Table G.4*). Using the custom calculation engine (shown in the lower-right of *Figure 5.9*), we calculate the AG-loop incremental replica current as DIZAG = DIZA – DIZ0. We then plot DVA and DIZAG as the bottom two analog charts on the left-hand side. As expected, these two quantities are of opposite polarities for a forward fault.

We place a digital chart below the analog charts to monitor the TD32 protection digitals. We see that all six fault loops are armed prior to the fault, as indicated by the ALPARM Relay Word bit. Shortly after the fault inception (indicated by the dark blue cursor), the START Relay Word bit asserts after the relay senses a change in the line current, along with the appropriate faulted-loop identification (in this case, the AGFLT Relay Word bit). The assertion of START releases the TD32 restraining torque integrators, while the assertion of AGFLT releases the operating-torque integrator. Once the operating torque exceeds the forward restraining torque, the TD32FA and TD32F Relay Word bits assert, indicating a forward fault on the A-phase. The light blue cursor marks the assertion of the TD32F Relay Word bit, and the **Cursor** Δ measurement indicates that the element asserted 1.2 ms after fault inception. Comparing the time stamp of the TD32F Relay Word bit assertion with the time stamp of the TD32F assertion of the SER report in *Figure 5.8* indicates the identical time-stamping between the TDR and SER records. *Figure 5.8* also includes the TW32FA Relay Word bit, which asserts within 100 µs of fault inception and acts as an accelerator for the POTT key (when ETW32 = Y), resulting in KEYA asserting along with TW32FA.

NOTE: SYNCHROWAVE Event uses the UTC offset information stored in the CFG file to display time stamps in local time, whereas the relay only uses UTC time.

See the online SYNCHROWAVE Event help file (accessible by pressing **<F1>**) or the *SYNCHROWAVE Event Software Instruction Manual* for additional instructions on plotting and calculating data from the TDR report.

Example 5.2 Analyzing MHR Records

Figure 5.10 shows a sample MHR record. This event record resulted from a TRIP condition the relay issued for an in-zone A-phase single-line-to-ground fault (the same event as the one *Figure 5.9* depicts).

Example 5.2 Analyzing MHR Records (Continued)

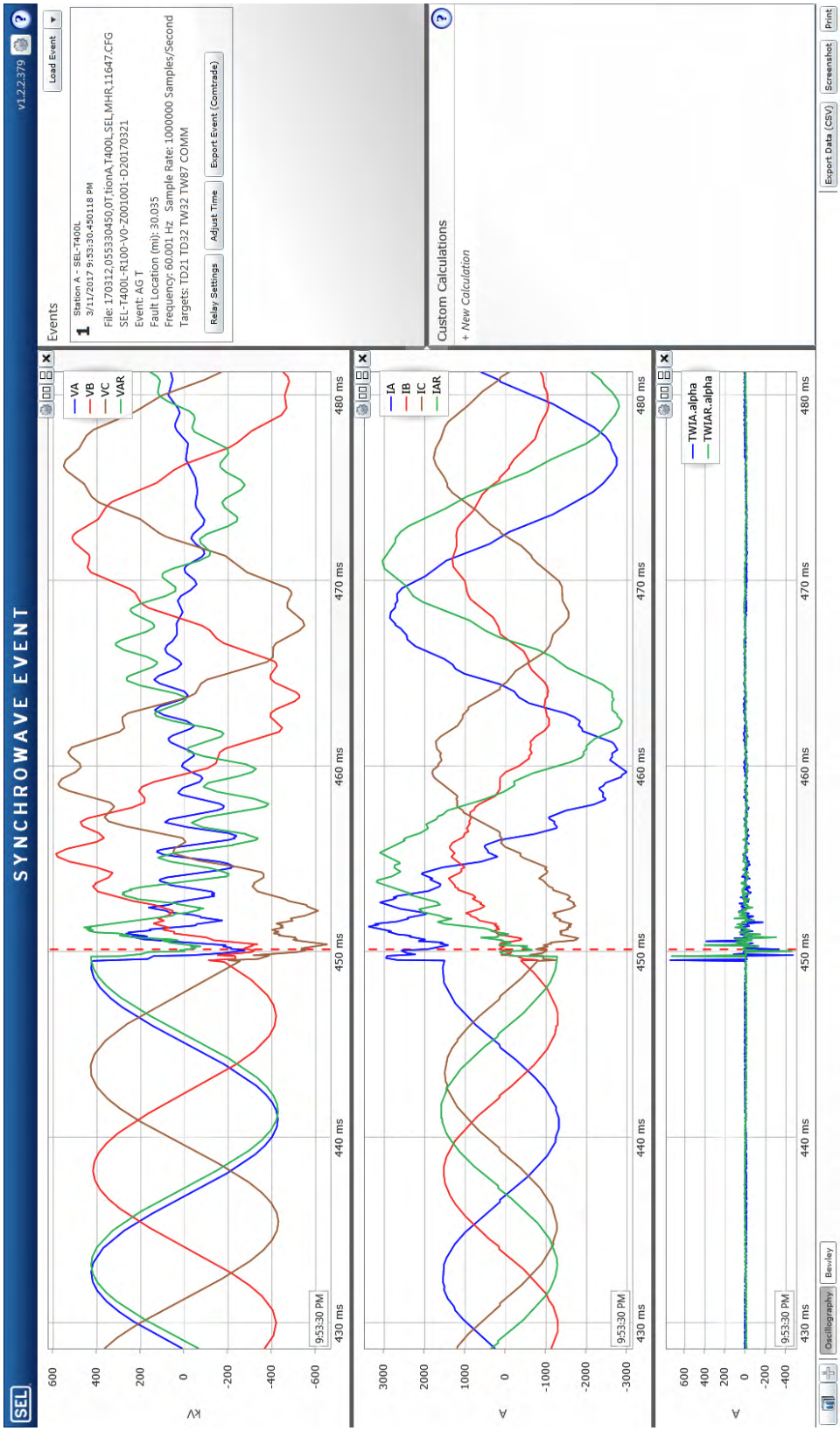

Figure 5.10 MHR Record Capturing a Forward A-Phase Fault – Oscillography

Example 5.2 Analyzing MHR Records (Continued)

For the analog channels, the line voltage and line currents are plotted as the top two analog charts shown in *Figure 5.10*. For this particular record, the direct point-to-point fiber-optic channel is installed, so the remote A-phase line voltage and line current are available and plotted as well. Note that the MHR record only includes the individual W and X local currents, but there are several signals that SYNCHROWAVE Event calculates in addition to the currents and voltages contained in the record. These include the line current, derived using the LINEI setting stored in the HDR file, as well as several TW-derived signals. See *Ultra-High-Resolution Fault Record on page E.1* for a complete list of the available signals the software calculates.

In the case of our single-line-to-ground fault, we plot the A-phase alpha mode TW line current for both the local and the remote relay in the bottom analog chart (see *Traveling Waves on page G.4* for additional information). *Figure 5.11* shows a 1 ms window of the event report beginning at the fault inception and illustrates the resolution of the MHR record. The polarity of the local and remote traveling waves match, as expected for an internal fault (see *Traveling-Wave Differential Scheme on page 2.31* for additional information). Aligning the time cursors on the first wave that arrives at the local and remote terminals provides the time difference between the two waves, which can be used to compute an approximate fault location (as shown in *Equation 4.1 on page 4.7*). Note that this time difference does not include CT cable delay compensation or data interpolation that the relay performs in order to yield an improved fault location result (see *Section 4: Fault Locator and Line Monitor* for additional information). The summary pane shown in the upper right of *Figure 5.10* pulls the precise fault location result calculated by the relay from the HDR file.

While the MHR record contains no digital elements, we can use the record overlay feature in SYNCHROWAVE Event to add the TDR record into the session (by way of the **Load Event** drop-down arrow) to plot the TDR record digitals and observe the performance of the relay TW protection elements. From *Figure 5.11*, we can see that the forward-looking A-phase TW32 element, TW32FA, asserted within 100 µs after fault inception, and because the TW32 elements are set to accelerate the POTT key (ETW32 = Y), KEYA asserts along with TW32FA.

Example 5.2 Analyzing MHR Records (Continued)

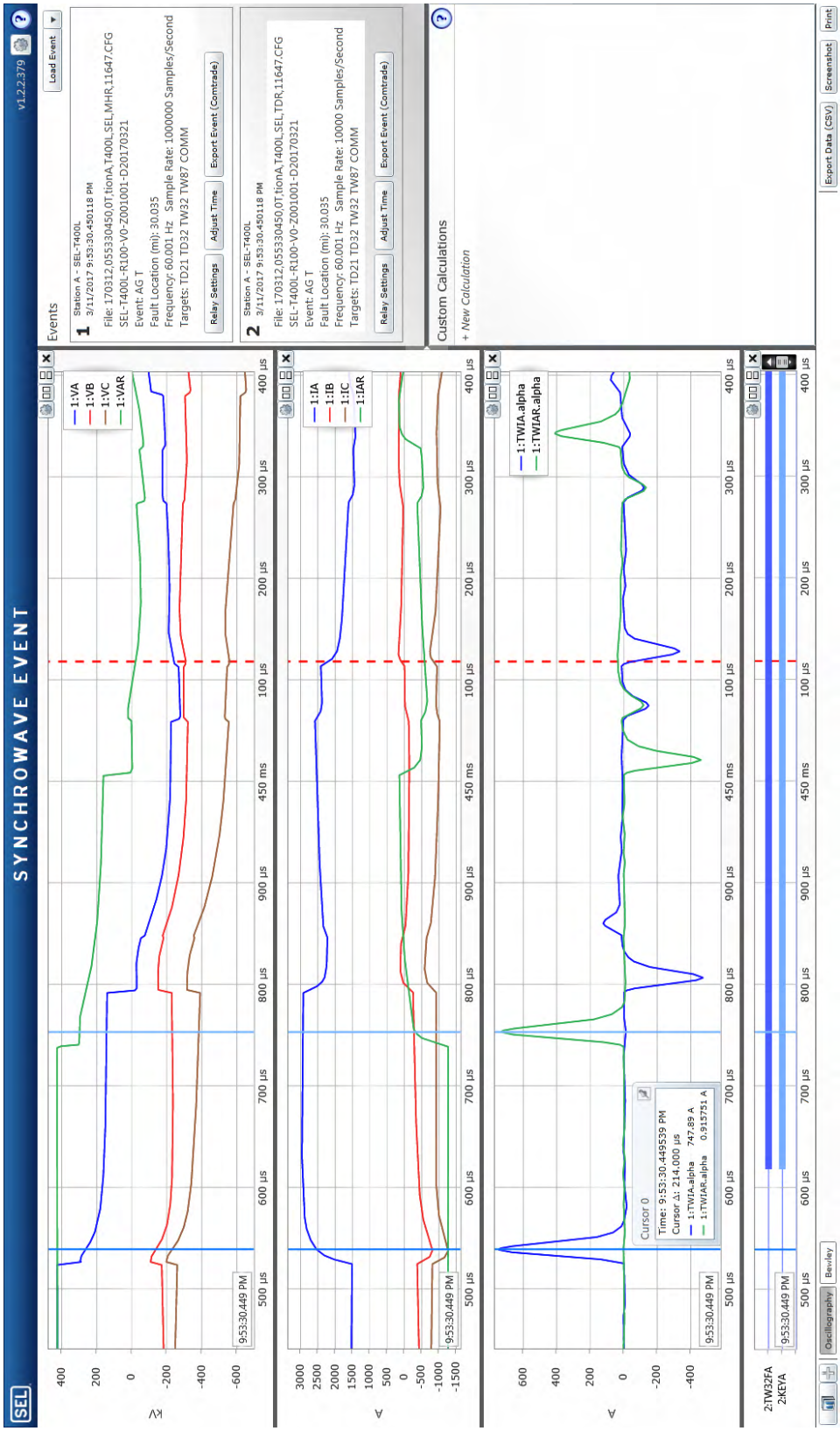

Figure 5.11 MHR Record Capturing a Forward A-Phase Fault – Oscillography (Zoomed In)

Example 5.2 Analyzing MHR Records (Continued)

See the online SYNCHROWAVE Event help file (accessible by pressing **<F1>**) or the *SYNCHROWAVE Event Software Instruction Manual* for additional instructions on plotting and calculating data from the MHR report.

Example 5.3 Viewing MHR Record Bewley Lattice Diagrams

Figure 5.12 shows a sample MHR record Bewley lattice diagram. This event record resulted from a TRIP condition the relay issued for an in-zone A-phase single-line-to-ground fault (the same event as the one *Figure 5.10* depicts). We can add a Bewley diagram in its own tab within the same SYNCHROWAVE Event session as the MHR analog plots shown in *Figure 5.10* (see the Bewley tab in the lower left of *Figure 5.12*).

Example 5.3 Viewing MHR Record Bewley Lattice Diagrams (Continued)

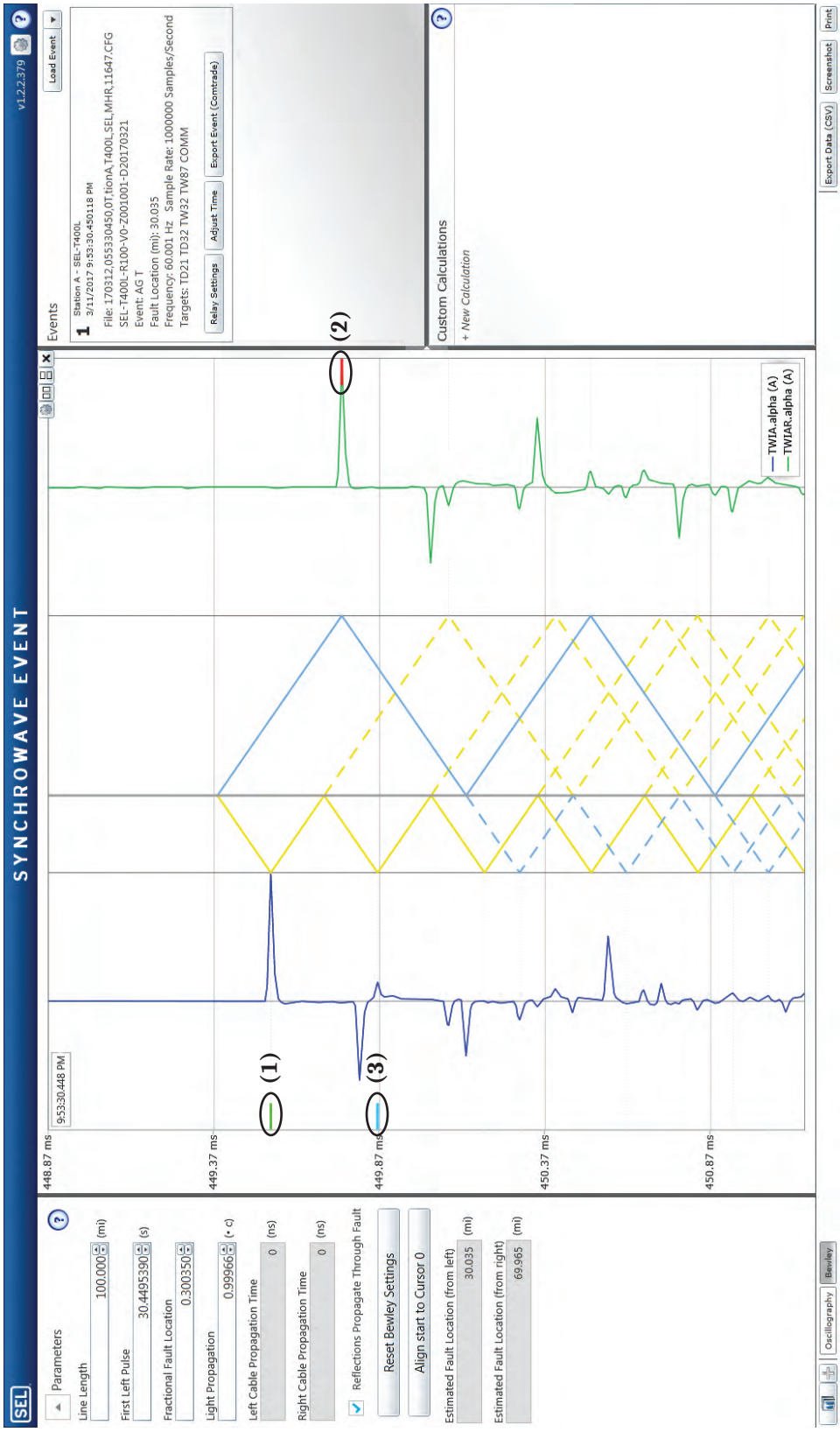

Figure 5.12 MHR Record Capturing a Forward A-Phase Fault – Bewley Lattice Diagram (Double-Ended Data)

Example 5.3 Viewing MHR Record Bewley Lattice Diagrams (Continued)

For this single-line-to-ground fault, we first add the local A-phase alpha mode TW line current. This results in the software plotting the current on the left side of the lattice diagram and identifying the local terminal values as the **Left** terminal in the **Parameters** pane shown in *Figure 5.12*. The software then automatically populates the **Line Length**, **Left Cable Propagation Time**, and **Light Propagation** fields with information from the LL, TWCPT, and TWLPT settings values stored in the HDR file. Additionally, the software reads the time stamp from the **First_TW_Time_Local** field of the HDR file (which corresponds to the time the first TW arrives at the local terminal) and uses that information to align the green stub cursor ((1) in *Figure 5.12*) with the first local TW. The placement of the green stub cursor defines the time stamp shown in the **First Left Pulse** field. The software also uses the **Fault_Location** field in the HDR file to automatically set the fault location on the diagram (vertical gray bar in *Figure 5.12*) and to draw the lattice.

Next, we add the remote end A-phase alpha mode TW line current, which links the remote values to the **Right** terminal fields (note that remote data are available in the event record because the direct point-to-point fiber-optic channel was installed for this example). Use the red stub cursor ((2) in *Figure 5.12*) to fine-tune the alignment of the cursor with the first remote TW. Lastly, refine the **Light Propagation** time SYNCHROWAVE Event calculated by adjusting the cyan stub cursor ((3) in *Figure 5.12*) to align with the first local TW reflected from the fault point. The software calculates the fault location from the left and right terminals and presents results in the **Estimated Fault Location** fields. Compare these values with the fault location the relay reports (**Fault Location** field). Note that the relay performs additional interpolation of the MHR data that SYNCHROWAVE Event does not, which can result in slightly different fault location calculations (see *Section 4: Fault Locator and Line Monitor* for additional information).

If the event record does not contain remote terminal data (i.e., the direct point-to-point fiber-optic channel is not installed or there is a problem with the channel), you may use the remote relay MHR record as long as the two relays are synchronized to the satellite clocks. Also, it may still be possible to perform a single-ended TW lattice fault location analysis (as shown in *Figure 5.13*). In such a case, we begin by adding the appropriate local current to the diagram as we did previously. For our example, we use the same A-phase single-line-to-ground fault as we did for *Figure 5.12*, and plot the local A-phase alpha mode TW line current. As before, the software automatically aligns the green stub cursor with the first TW and sets the fault point based on the fault location the relay calculated (**Fault Location** field). We then align the red stub cursor with the first local TW reflected from the fault point (the same location as the cyan stub cursor in the case of working with double-ended data, shown in *Figure 5.12*). Finally, we align the cyan stub cursor with the first full-line-traversal TW, as shown in *Figure 5.13* (ensure that the **Reflections Propagate Through Fault** check box is selected to display the dashed lattice lines), in order to refine the **Light Propagation** and **Estimated Fault Location** results.

Example 5.3 Viewing MHR Record Bewley Lattice Diagrams (Continued)

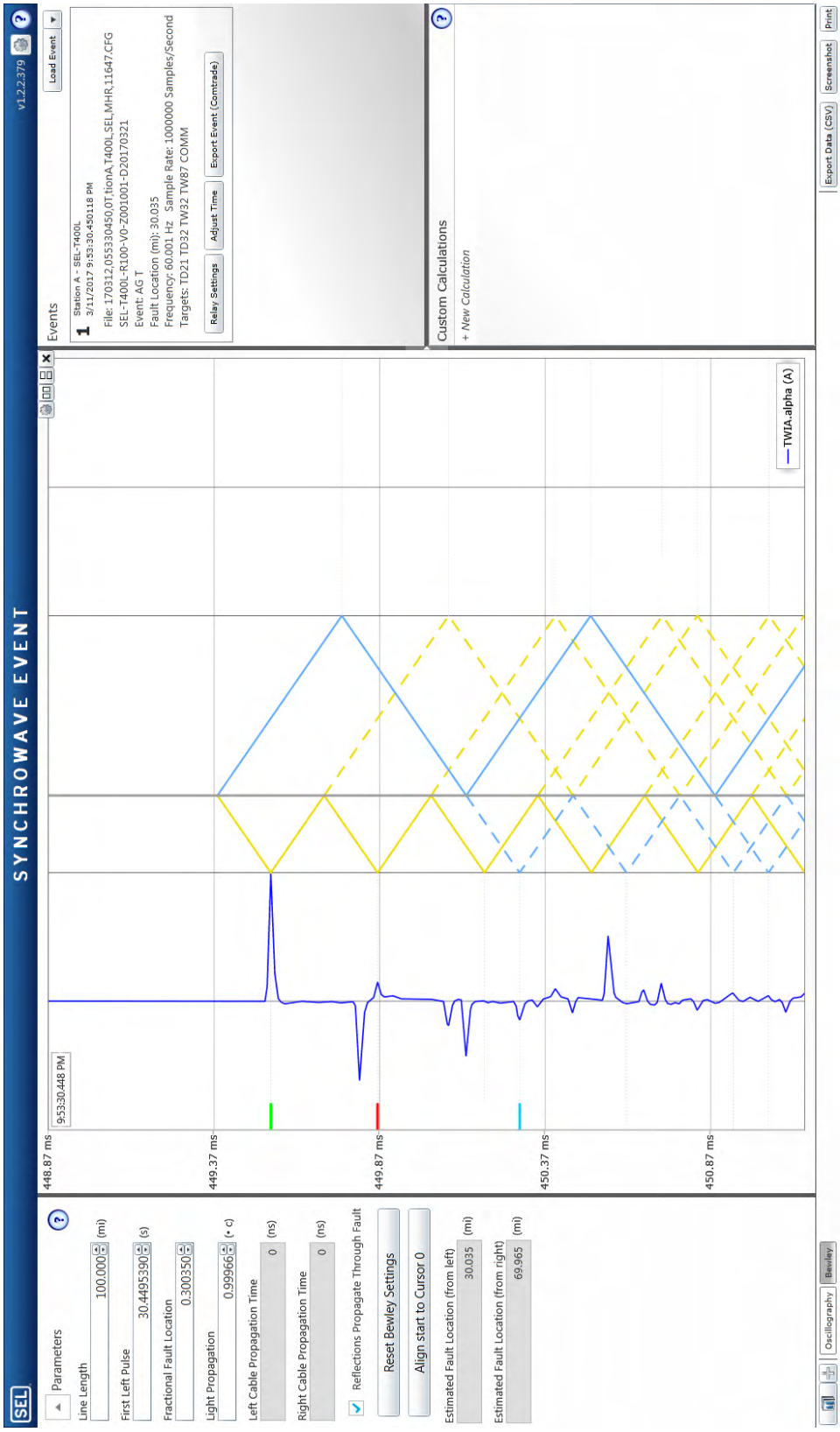

Figure 5.13 MHR Record Capturing a Forward A-Phase Fault – Bewley Lattice Diagram (Single-Ended Data)

Example 5.3 Viewing MHR Record Bewley Lattice Diagrams (Continued)

See the online SYNCHROWAVE Event help file (accessible by pressing **<F1>**) or the *SYNCHROWAVE Event Software Instruction Manual* for additional instructions on configuring and manipulating a Bewley lattice diagram for an MHR record.

SECTION 6

Settings Guidelines

This section provides settings guidelines for the SEL-T400L. It explains key settings of the SEL-T400L and offers application guidelines for each. This section is organized into six main parts.

- *Device Configuration Settings* on page 6.2 explains settings and parameters associated with the SEL-T400L as a protection system asset.
- *AC Inputs and Line Configuration Settings* on page 6.5 explains how to configure the voltage and current inputs of the relay and provide parameters of the protected line.
- *Protection Settings* on page 6.11 offers guidelines related to applying and configuring the protection functions of the SEL-T400L.
- *Fault Locator Settings* on page 6.22 offers guidelines related to the SEL-T400L fault locator.
- *Reports Settings* on page 6.25 offers guidelines for configuring the Sequence of Events recorder and the event recorder of the SEL-T400L.
- *Current Transformer Requirements* on page 6.29 offers guidelines (using both ANSI and IEC methods) for selecting or verifying CTs for SEL-T400L protection applications.

This section discusses application considerations in general and offers settings guidelines and recommendations. *Section 7: Protection Applications Examples* provides a number of examples that illustrate the general principles this section outlines. *Figure 6.1* shows an overview of the SEL-T400L setting selection process.

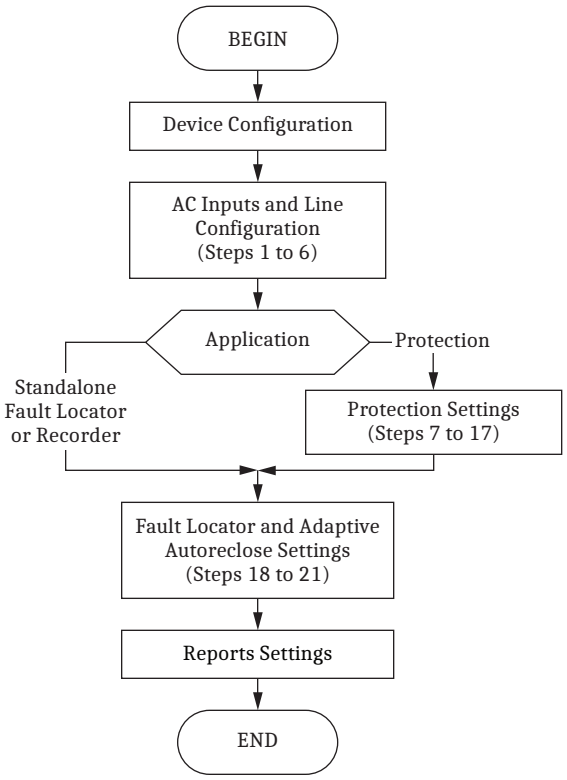

Figure 6.1 Overview of the SEL-T400L Setting Selection Process

Follow the sequence of steps shown in *Figure 6.1* when selecting SEL-T400L settings. First configure the device and its ac voltage and current inputs and enter the line parameters. In protection applications, follow with setting the protection elements and schemes. In standalone fault-locating and event-recording applications, proceed directly to *Fault Locator Settings* on page 6.22 and *Reports Settings* on page 6.25.

Device Configuration Settings

SEL-T400L device configuration includes settings associated primarily with the device itself rather than with any particular function the device provides. Device configuration encompasses the following three categories:

- General Settings
- Communications Ports
- Contact Inputs

General Settings

Use general settings to identify the SEL-T400L as a protection asset, and to enable advanced settings if needed.

Table 6.1 lists the general device settings.

Table 6.1 General Settings

Name	Description	Range	Default
CONAM	Company name	ASCII string with a maximum length of 4	CONM
SID	Station identifier	ASCII string with a maximum length of 40	Station A
RID	Relay identifier	ASCII string with a maximum length of 40	SEL-T400L
EADVS	Advanced settings	Y, N	N

CONAM

Follow your company asset-labeling practice and enter a designation for your organization or a region in your organization. CONAM is a relay setting stored in the COMTRADE event record header file that allows you to better identify the record source.

SID

Follow your company asset-labeling practice and enter a station identifier for the relay location. Use informative names for ease of event analysis and accuracy of recordkeeping. SID is a relay setting stored in the COMTRADE event record header file that allows you to better identify the record source. Consider replacing this setting with a generic name if you must anonymize your settings files before sending them to a third party (including SEL).

RID

Follow your company asset-labeling practice and enter a unique relay identifier. Use informative names for ease of event analysis and accuracy of recordkeeping. Consider embedding designations of the protected line, breaker or breakers, and protection system (main 1 or main 2) in the RID string. RID is a relay setting stored in the COMTRADE event record header file that allows you to better identify the record source. Consider replacing this setting with a generic name if you must anonymize your settings files before sending them to a third party (including SEL).

EADVS

Enable (EADVS = Y) or disable (EADVS = N) access to advanced SEL-T400L settings.

Communications Ports

NOTE: On a per port basis, select either SEL MB8 encoding for signaling local SEL relays and SEL I/O devices or IEEE C37.94 encoding for signaling the remote SEL-T400L over compliant multiplexers. Use SEL MB8 encoding and a media converter to interface with multiplexers not compliant with IEEE C37.94. When using SEL MB8 encoding, select the baud rate on a per port basis. When using IEEE C37.94 encoding, the data rate is 1x64 kbps.

Enable communication on all ports that you intend to use by setting EPORT = Y. This can include any of the following:

- MIRRORED BITS Ports 1, 2, and 3, and direct point-to-point fiber-optic Port 6, for protection signaling
- Ethernet Port 5 for remote permanent engineering access, SCADA, and HMI
- Front-panel USB Port F for local temporary engineering access

The relay does not transmit or receive data on a port if EPORT = N for that port. The relay does not annunciate the status or gather statistics for ports that are disabled. SEL recommends disabling unused ports.

Ports 1, 2, and 3

Set ENCODING to MB8 when exchanging MIRRORED BITS with SEL devices, such as the SEL-411L or SEL-421, or when connecting to an SEL-2814 or an SEL-2507. Set ENCODING to C37.94 when connecting directly to a fiber-optic interface on an IEEE C37.94-compliant multiplexer. In this application, set DATACLK = E at both line terminals. Use DATACLK = I only when connecting two SEL-T400L Relays back-to-back for testing. In this case, set one relay to E and the other to I. When ENCODING is set to MB8, set SPEED for MIRRORED BITS ports to match the connected channel and the MIRRORED BITS-compatible device with which you intend to communicate. For protection applications (POTT, DTT, breaker failure), consider using the fastest available baud rate to reduce communications latency.

Secure the MIRRORED BITS connections with transmit and receive identifiers (TXID and RXID, respectively) to prevent accidental cross-connection of MIRRORED BITS devices. Match the TXID to the RXID of the device you communicate with on any given port. Assign the TXID and RXID numbers carefully, considering relays in close proximity that may be prone to cross-connection during testing, commissioning, or troubleshooting.

Enable permissive and direct trips through use of the EPOTT and EDTT port settings, respectively. See *Protection Settings* on page 6.11 for more detail. Note that the relay always transmits permissive and direct trips as long as the port is enabled (EPORT = Y). The EPOTT and EDTT settings control reception of the permissive and direct trips.

Use Port 1, 2, or 3 for double-ended TW-based fault locating. Use the FLPORT setting to indicate which port the relay uses to receive the fault-locating data. In this application, you must set the port ENCODING setting to C37.94 and ensure that the channel latency is below 30 ms. You must also ensure both relays are connected to accurate time sources, such as IEEE C37.118-compliant satellite clocks. The fault-locating data are sent independent of the MIRRORED BITS and have no impact on these bits.

Port 6

Enable Port 6 by setting EPORT = Y to use the TW87 protection scheme, the POTT and DTT schemes over the point-to-point fiber-optic channel, and the double-ended fault-locating method. Assign unique transmit and receive addresses to prevent accidental cross-connection of SEL-T400L devices, as explained in *Protection Settings* on page 6.11. Enable POTT and DTT applications over the direct point-to-point fiber-optic channel (settings EPOTT and EDTT, respectively) as required.

Order Port 6 small form-factor pluggable (SFP) transceivers to account for the distance and losses of your fiber-optic channel (see *Section 3: Protection Communications Channels* for details).

Port 5

Enable Port 5 (EPORT = Y) for a permanent connection to a LAN for permanent engineering access, SCADA, and HMI applications. Configure the port accordingly (see *Section 9: SCADA and HMI Protocols*).

Port F

Enable Port F for a temporary connection to a portable computer for engineering access via the front-panel USB port (EPORT = Y). Assign the maximum access level (the MAXACC setting) to control privileges of the front-panel port user. See *Section 8: Engineering and Operator Access Interfaces and Tools* for more details.

Contact Inputs

The SEL-T400L uses the BLK input to block all protection elements and schemes. The remaining inputs are not used by default and are available to bring in binary information such as a fault locator trigger, an event report trigger, a control signal from the automatic reclosing relay, or a cross-tripping signal from an external relay.

By default, debounce delays for the contact inputs are set to 2 ms. If necessary, enable advanced settings (EADVS = Y) and use the IN101D, IN102D, IN103D, IN104D, and BLKD settings to configure contact input debounce timers. Consider extending the debounce timers for inputs exposed to interference (such as inputs connected to long control cables from the substation switchyard).

You do not need to change debounce settings unless you bring, via contact inputs, such critical information as a trip command from the local breaker failure relay and use it in the SEL-T400L trip setting. For security and speed, use of MIRRORED BITS communications is preferred for bringing critical binary inputs to the SEL-T400L.

AC Inputs and Line Configuration Settings

Use the information in the following section to configure ac inputs of the SEL-T400L for protection, fault-locating, and event-recording applications. The section also explains line parameters you will need to provide for protection and fault-locating applications.

AC Inputs

Follow the steps in *Figure 6.2* to configure the ac inputs of the relay.

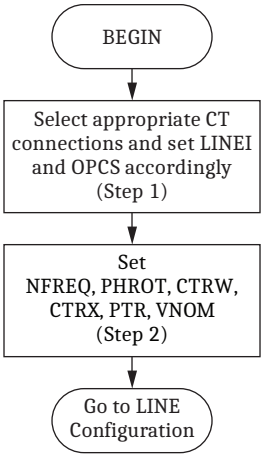

Figure 6.2 Configuring the AC Inputs

STEP 1. CT Connections, Line Current Source, and Open-Pole Source Settings

Select one of five line terminal configurations as shown in *Figure 6.3*.

The configuration of *Figure 6.3(a)* is a single-breaker application such as single-bus single-breaker or double-bus single-breaker. Connect the line protection CT to the IW input of the relay and set the line current source LINEI = IW and the open-pole current source OPCS = LINEI.

The configuration of *Figure 6.3(b)* is a dual-breaker application such as breaker-and-a-half, ring-bus, or double-bus double-breaker. Connect the line protection CTs individually to the IW and IX inputs of the relay, and set LINEI = COMB and OPCS = LINEI. The relay allows for different CT ratios for the IW and IX inputs, with a maximum mismatch of 1:15.

The configuration of *Figure 6.3(c)* is a dual-breaker application with CTs of the same ratio paralleled for a single CT input relay (typically a retrofit application). Connect the paralleled CTs to the IW input of the relay and set LINEI = IW and OPCS = LINEI.

The configuration of *Figure 6.3(d)* is a single-breaker application with a line-side reactor. If the reactor cannot be switched when the line is energized, you may leave the reactor inside the line protection zone. However, if the reactor can be switched on or off when the line is energized, connect the reactor CTs to the IX input of the relay, as shown in *Figure 6.3(d)*, to remove the reactor from the line protection zone. Connect the line CT to the IW relay input, and set LINEI = COMB and OPCS = IW. Typically, the line and reactor CTs would have different ratios and the relay compensates for the CT ratio difference.

The configuration of *Figure 6.3(e)* is similar to that of *Figure 6.3(d)*, except that the line is terminated with two breakers. In this case, parallel the two breaker CTs with the same ratio and connect them to the IW input of the relay. Connect the reactor CT to the IX input of the relay, and set LINEI = COMB and OPCS = IW. Typically, the line and reactor CTs would have different ratios and the relay compensates for the CT ratio difference.

Providing the reactor current to the relay, as shown in *Figure 6.3(d)* and *Figure 6.3(e)*, allows the relay to remain secure during reactor switching. The switching causes an abrupt change in voltage within the line zone of protection, and this change causes incremental voltages and currents at both terminals of the line. These incremental voltages and currents appear as a forward event to relays at both line terminals and cause the POTT logic to operate unless the solution of *Figure 6.3(d)* or *Figure 6.3(e)* is in use. Apply the application shown in *Figure 6.3(d)* and *Figure 6.3(e)* to a line-side transformer or a line-side shunt capacitor bank if you plan to allow switching it on or off when the line is energized.

SEL strongly discourages using interposing CTs to match the breaker CT ratios, because the interposing CTs may interfere with traveling-wave-based functions of the SEL-T400L. Interposing CTs can be considered for matching the reactor CT ratio because the relay does not attempt to measure TWs in the reactor currents.

Refer to *Current Transformer Requirements* on page 6.29 for CT sizing rules in SEL-T400L protection applications.

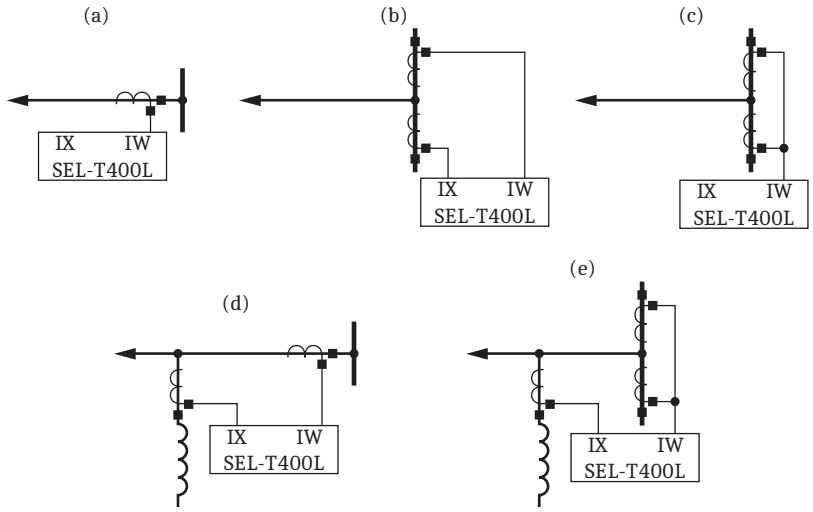

Figure 6.3 SEL-T400L Line Terminal Configurations

STEP 2. Installation Parameters

Enter the power system nominal frequency (NFREQ) and phase rotation (PHROT) values. Configure the CT ratios of the relay current inputs in use: CTRW, CTRX, or both, according to the LINEI setting.

The relay compensates for a difference in CT ratios as great as 1:15. With different CT ratios, the relay, when using secondary overcurrent and impedance settings, applies an effective CT ratio equal to the greater of the two ratios:

$$\text{Effective CTR} = \text{MAX}(\text{CTRW}, \text{CTRX})$$

Equation 6.1

Use the effective CT ratio when calculating secondary overcurrent and impedance settings.

For the TW87 scheme, the relay compensates for the mismatch of the local and remote effective CT ratios as great as 1:10. The remote secondary currents are scaled to the effective local CT ratio before the local settings in secondary units are applied to any signals derived from the remote currents.

Configure the PT ratio (PTR) and enter the nominal system voltage (VNOM) as a secondary root-mean-square (rms) line-to-line value.

Line Configuration

Follow the process shown in *Figure 6.4* to provide line configuration. Line parameters are protection settings. Provide accurate values to ensure security and dependability of the relay protection elements and accuracy of the relay fault locator.

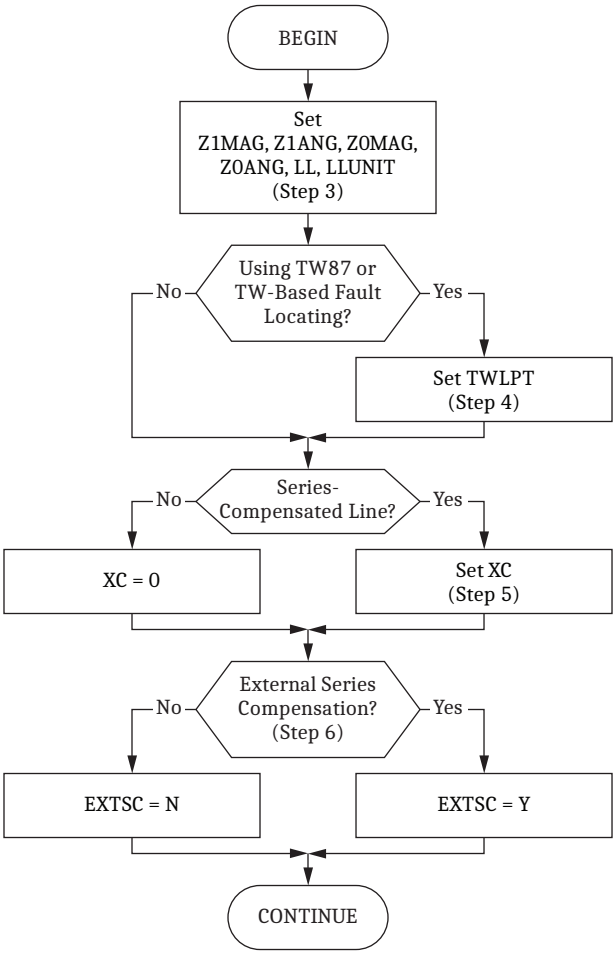

Figure 6.4 Process of Configuring Line Parameters

STEP 3. Line Impedances and Length

Set the positive- and zero-sequence line impedances, with the magnitudes (Z1MAG, Z0MAG) in secondary ohms and the angles (Z1ANG, Z0ANG) in electrical degrees. The impedance values are at the nominal system frequency (NFREQ). When converting primary ohms to secondary ohms, use the effective CT ratio if LINEI = COMB:

$$\text{OHMS SECONDARY} = \text{OHMS PRIMARY} \bullet \text{Effective CTR/PTR}$$

Equation 6.2

Set the line length unit (LLUNIT) as mi or km, and then set the line length (LL) in units of LLUNIT.

STEP 4. Traveling-Wave Line Propagation Time

When using the TW87 protection scheme, you must set the traveling-wave line propagation time (TWLPT). The TWLPT is the one-way TW travel time from one line terminal to the opposite terminal in microseconds. SEL recommends setting the TWLPT in all applications because the TW-based fault-locating methods (both single- and double-ended) use this setting.

The TWLPT setting is critical for TW fault-locating accuracy and for security of the TW87 protection scheme. The TW87 scheme tolerates as much as 10 µs inaccuracy in the TWLPT. Each microsecond of error in the TWLPT setting may result in a TW-based fault location error of 150–300 m (492–984 ft).

SEL recommends measuring the TWLPT value when commissioning the relay. With the remote circuit breaker open, close the local circuit breaker to energize the line. Measure the two-way TW travel time as the TW caused by energizing the line travels to the remote line end, reflects from the open remote breaker, and returns. Use the SEL-T400L high-resolution event recorder to capture the currents (MHR COMTRADE record). Use SEL-5601-2 SYNCHROWAVE Event Software to plot current TWs and measure TW round-trip time. Use half of the measured time as the TWLPT setting. Refer to *Section 11: Testing and Commissioning* for a step-by-step procedure to measure the TWLPT value.

For overhead lines, you may expect the TWLPT to be approximately the line length divided by 98 percent of the speed of light in free space. For example, a 300 km (186 mi) overhead line has a TWLPT of about 1021 µs (about 340 µs per 100 km or 548 µs per 100 mi).

STEP 5. In-Line Series Compensation

The in-line series compensation setting is required in protection applications. In fault-locating applications, you can leave this setting at its default value of 0 ohms. From the relay's perspective, in-line series compensation takes place if the series capacitor bank is located between the local PT and the remote bus of the protected line (see *Figure 6.5* for examples).

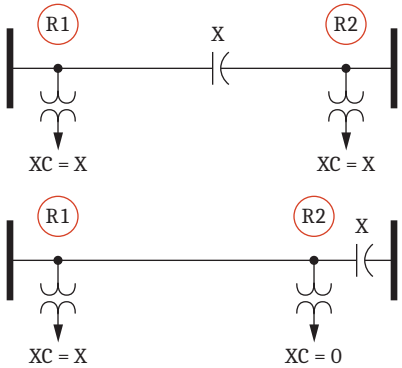

Figure 6.5 Examples of Determining the In-Line Series Compensation Setting

When protecting a line with in-line series compensation, set the total series capacitive reactance (XC) in secondary ohms at the nominal system frequency (NFREQ). Use the effective CT ratio when converting primary ohms to secondary ohms, if you are using both IW and IX current inputs with CTs of different ratios.

Alternatively, you can calculate XC as a product of the percentage compensation value and the secondary positive-sequence line impedance magnitude.

When two or more in-line series capacitor banks are present, set XC as the sum of their reactances.

STEP 6. External Series Compensation

IMPORTANT: Examine the opposite line terminal when determining the EXTSC setting.

The external series compensation setting is required in protection applications. In fault-locating applications, you can leave this setting at its default value of N. External series compensation takes place if a series capacitor is located external to the protected line at such an electrical distance from the remote bus that the sum of the capacitor's negative reactance and the positive inductive reactance of the line section between the remote bus and the capacitor is negative. If the sum is positive, do not consider the capacitor as an external capacitor.

If there is external series compensation at a line terminal, set EXTSC = Y for the opposite terminal. Otherwise, set EXTSC = N for the opposite terminal. Note that two SEL-T400L Relays protecting a given line may have different EXTSC settings.

Figure 6.6 provides an example of setting the EXTSC value. At Terminal B, the net reactance between the positive inductive reactance of the BC line (+100 percent) and the negative reactance of the series capacitor (–80 percent) sums to +20 percent of the BC line reactance. Therefore, set EXTSC = N in Relay R1. At Terminal A, the net reactance between the positive inductive reactance from Bus A to the series capacitor (+50 percent) and the negative reactance of the series capacitor (–80 percent) sums to –30 percent of the AD line reactance. Therefore, set EXTSC = Y in Relay R2.

Figure 6.7 provides an example of both in-line and external series capacitors.

When using the TW87 scheme, set EXTSC = Y in both SEL-T400L Relays if external series compensation occurs at one or more line terminals.

In multiterminal applications, set EXTSC = Y if any external series compensation occurs at any of the remote line terminals.

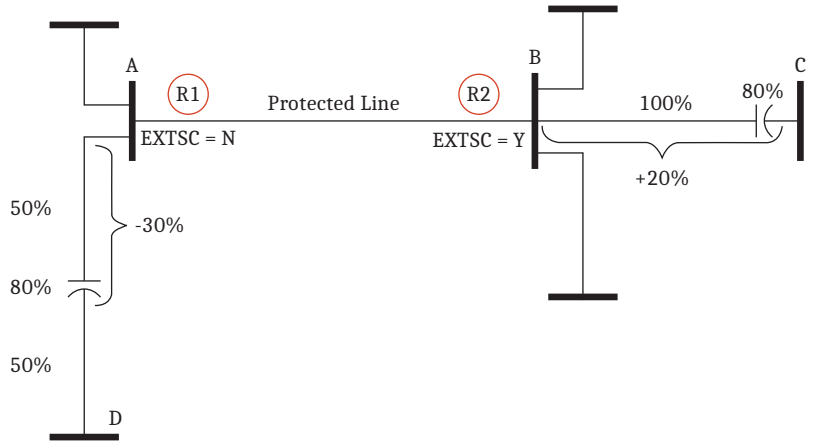

Figure 6.6 Example of Determining the EXTSC Setting

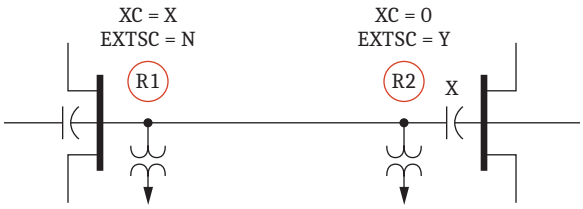

Figure 6.7 Example of Both In-Line and External Series Compensation

Protection Settings

Follow the sequence of steps shown in *Figure 6.8* when selecting settings for SEL-T400L protection elements and schemes.

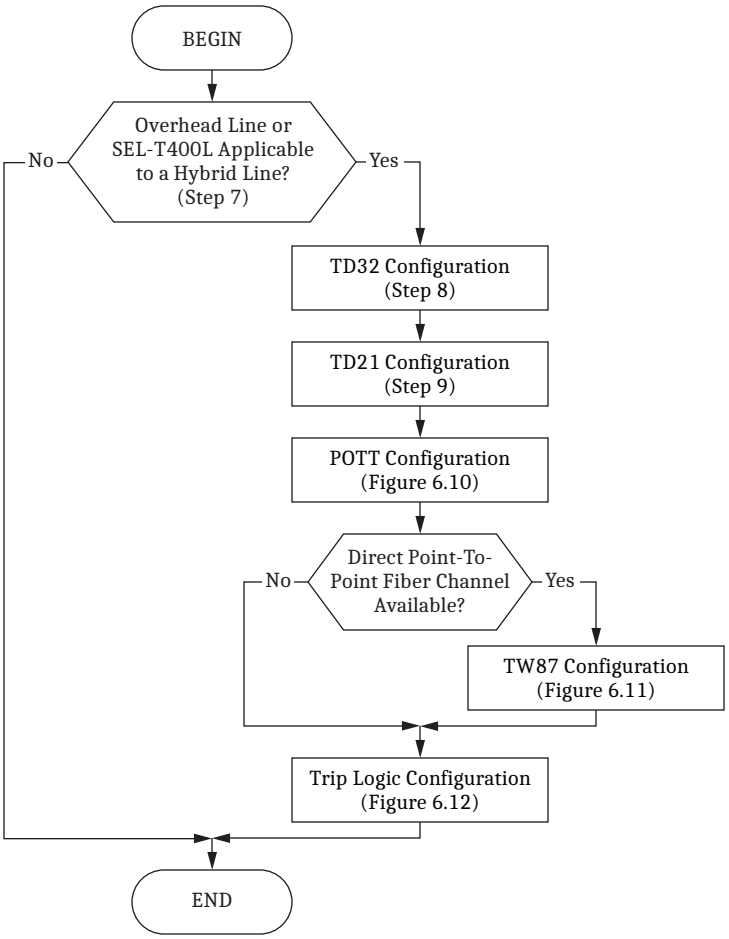

Figure 6.8 Protection Settings Selection Process Overview

STEP 7. Assessing SEL-T400L Applicability to Hybrid Lines

The SEL-T400L is designed to protect overhead transmission lines. However, with careful engineering and analysis, you may consider the SEL-T400L for applications to some hybrid lines with overhead and underground cable sections.

Follow these rules to determine the applicability of the SEL-T400L protection elements to hybrid lines consisting of overhead lines and underground cables:

- Apply both the TD21 element (for unconditional tripping) and the TD32 element in the POTT scheme to lines where the positive- and zero-sequence impedance of the underground cable section is less than about 20 percent of the total line impedance, and the line steady-state, positive-sequence charging current is less than 300 A.
- Apply the TW87 scheme to lines where positive- and zero-sequence impedance of the cable section is less than about 5 percent of the total line impedance and the cable section is not more than 2 km in length.

Follow these rules to determine the MODE setting for TW-based fault locating:

- Apply MODE = CLARKE for overhead lines and for hybrid lines with underground sections consisting of three single-phase conductors in a common shield.
- Apply MODE = PHASE for underground cables consisting of single-phase cables with individual shields.
- Contact SEL for recommendations and analysis on how to set the MODE for hybrid lines with overhead sections and underground cable sections.

If MODE = PHASE, the SEL-T400L disables the TW87 protection scheme.

TD32 Directional and TD21 Distance Element Settings

STEP 8. TD32 Impedance Thresholds

The TD32 element, intended for use in the POTT scheme, is also used to supervise the TD21 protection element and the TW87 protection scheme in applications to series-compensated lines. Therefore, always set the TD32ZF and TD32ZR thresholds irrespective of which SEL-T400L protection elements are enabled and configured to trip.

Set the forward impedance threshold, TD32ZF, less than the positive-sequence system impedance behind the relay, assuming the strongest local system configuration. Use your short-circuit program to obtain the local system positive-sequence equivalent impedance. SEL recommends a margin of about 70 percent to account for nonhomogeneity between the system and line impedances. Set TD32ZF to 0.3 of the minimum system impedance as follows:

$$TD32ZF = 0.3 \bullet MIN(|Z1SYS|)$$

Equation 6.3

Set the reverse impedance threshold, TD32ZR, less than the sum of the positive-sequence line impedance and the positive-sequence remote system impedance, assuming the strongest remote system configuration. For simplicity, SEL recommends disregarding the remote system impedance and applying a margin of about 70 percent of the positive-sequence line impedance. Set TD32ZR to 0.3 of the line positive-sequence impedance:

$$TD32ZR = 0.3 \bullet |Z1LINE|$$

Equation 6.4

In applications without series compensation, use Z1MAG for Z1LINE.

Setting the TD32ZF and TD32ZR thresholds lower than the recommended values does not improve dependability, but it may improve operating time to a small degree. However, the TD32 element is inherently very fast, and for optimum security, SEL discourages reducing TD32 impedance thresholds below recommended values.

When using your short-circuit program to obtain system impedances, ensure that it calculates the apparent impedance from the voltage at the relay PT location and the current at the relay CT location, assuming the remote end is open for the protected line. This rule is especially important if series capacitors are present near the relay location. In applications to series-compensated lines, use the net impedance between the inductive line impedance (Z1MAG) and the total capacitor reactance (XC) for Z1LINE in *Equation 6.4*. Furthermore, if the PT is located on the bus side of the series capacitor, the series capacitor reactance affects the

TD32ZR setting. If the PT is located on the line side of the series capacitor, the series capacitor reactance affects the TD32ZF setting. For example, SC2 affects the TD32ZF setting and SC1 affects the TD32ZR setting in the application shown in *Figure 6.9(a)*. In the application shown in *Figure 6.9(b)*, however, both SC1 and SC2 affect the TD32ZF setting, but neither SC2 nor SC1 affects the TD32ZR setting.

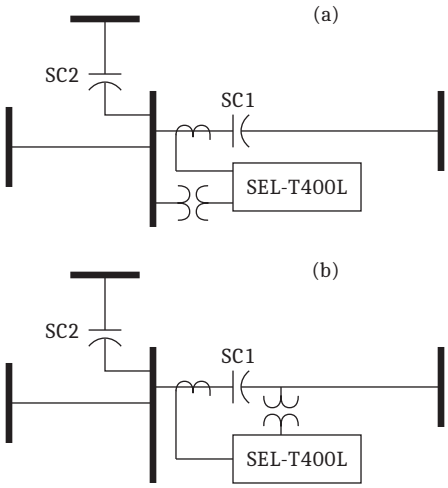

Figure 6.9 Example of the Impact of Series Capacitors on the TD32 Impedance Threshold Settings

TD32ZF and TD32ZR are set in secondary ohms on the effective CT ratio base and are both positive numbers signifying the magnitude of the impedances.

STEP 9. TD21 Reach

Select the phase and ground reach settings of the TD21 element (TD21MP and TD21MG, respectively) to cover most of the protected line, but leave a sufficient security margin short of the remote bus.

Use a security margin that is a sum of the percentage errors of the PTs, CTs, line impedance data, steady-state relay accuracy, and the transient overreach of the TD21 element. The SEL-T400L TD21 transient overreach is less than 10 percent of the set reach. The sum of the other errors typically equals 10 to 15 percent. Consider setting TD21MG to less than TD21MP to account for greater errors and greater variability in the zero-sequence line impedance.

NOTE: Set the TD21 reach in per unit of the line length (not in secondary ohms).

For convenience, set the TD21 reach in per unit of the line length. Consider a TD21MP value of 0.75 pu and a TD21MG value of 0.70 pu as typical SEL-T400L TD21 settings.

Apply shorter ground reach settings for lines with mutual coupling, per the general rules of distance protection. You do not need to consider the source-to-impedance ratio (i.e., the relative electrical length of the line) when setting the TD21 reach. However, you may consider more conservative TD21 reach settings in applications to very long lines drawing considerable capacitive charging current.

Also, apply shorter reach settings for hybrid overhead and cable lines to account for errors resulting from line nonhomogeneity. Reducing the reach by half of the total cable section impedance in these applications is a good practice. For example, if the total impedance of the cable section is 30 percent of the entire line impedance, you may consider reducing the TD21 reach by an extra 0.15 pu.

In series-compensated line applications, when a series capacitor is located between the local PT and the remote bus, select the TD21 reach settings without accounting for the negative reactance of in-line capacitors or external series compensation. For example, for a line with 60 percent series compensation located in the middle of the line, the reach can still be set to 75 percent of the line length (i.e., TD21MP = 0.75 pu, and not 0.75 • (1 – 0.6) = 0.30 pu).

Disable the TD21 element for hybrid overhead and cable lines that do not meet the applicability criteria described in *STEP 7. Assessing SEL-T400L Applicability to Hybrid Lines* on page 6.11 (i.e., set TD21P = OFF and TD21G = OFF).

POTT Logic

Follow the steps in *Figure 6.10* to configure the POTT logic.

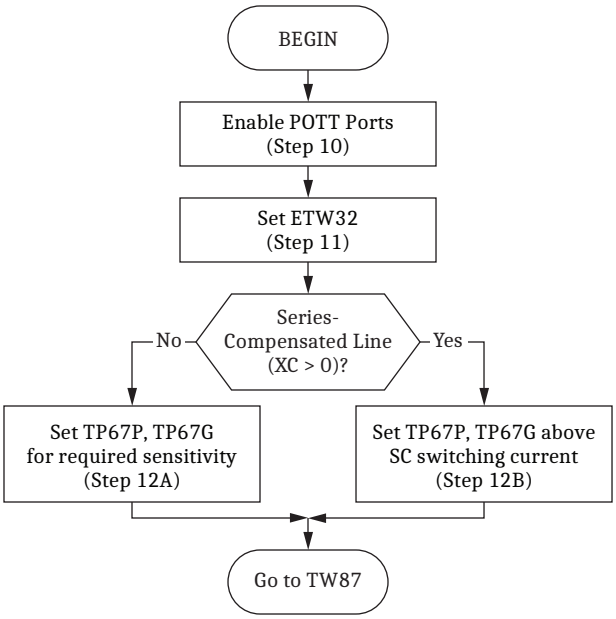

Figure 6.10 Configuring the POTT Logic

STEP 10. POTT Communications

Use of MIRRORED BITS communications on Ports 1, 2, and 3 is an economical way to provide the POTT protection scheme with SEL-T400L Relays. Depending on the number of line terminals, enable the POTT scheme communications on one, two, or all three MIRRORED BITS communications ports (EPOTT = Y on Ports 1, 2, and 3), and connect the ports you selected to one, two, or three remote SEL-T400L Relays in the POTT scheme (see *Permissive Overreaching Transfer Trip Logic* on page 2.46). Use an SEL-2814M (male connection) media converter to connect an SEL-T400L MIRRORED BITS port to a SONET or SDH multiplexer. Use an SEL remote I/O module such as the SEL-2507 to connect an SEL-T400L MIRRORED BITS port to I/O teleprotection equipment such as a power line carrier (PLC). See *Section 3: Protection Communications Channels* and *Section 10: Installation* for further detail. When using I/O communications for the POTT channel, such as with a PLC channel, limit any chance of a spurious permissive trip pickup at the receiving relay by ensuring that you wire and ground your signals following the PLC manufacturer's recommendations. Set a debounce time in the PLC equipment accordingly.

NOTE: On a per port basis, select either SEL MB8 encoding for signaling local SEL relays and SEL I/O devices or IEEE C37.94 encoding for signaling the remote SEL-T400L over compliant multiplexers. Use SEL MB8 encoding and a media converter to interface with multiplexers not compliant with IEEE C37.94. When using SEL MB8 encoding, select the baud rate on a per port basis. When using IEEE C37.94 encoding, the data rate is 1x64 kbps.

In two-terminal applications, you can use the direct point-to-point fiber-optic channel connected on Port 6 to provide POTT communications (EPOTT = Y on Port 6). Use the Port 6 channel as a primary POTT channel or as a redundant channel for the primary MIRRORED BITS channel on Port 1, 2, or 3. In two- or three-terminal applications, you may consider using the direct point-to-point fiber-optic channel for the TW87 scheme or double-ended TW-based fault locating. Do not enable EPOTT on Port 6 in three- or four-terminal applications.

The SEL-T400L sends and receives phase-segregated permissive trip signals as MIRRORED BITS 1, 2, and 3, and you cannot reprogram them. When using the SEL-T400L in a POTT scheme with a different relay or relays at the remote terminal or terminals, remember to program MIRRORED BITS 1, 2, and 3 in these relays to represent permissive trip signals sent to the SEL-T400L.

STEP 11. Permissive Trip Keying

The POTT logic uses the TD32 element to key the permissive signals and to supervise the received permissive signals before initiating a trip. The POTT logic provides an option to allow the TW32 directional element to accelerate permissive keying. Using the TW32 element in addition to the TD32 element is recommended when the PT reproduces the first voltage TW reasonably well. Capacitively coupled voltage transformers (CCVTs) may reproduce the polarity and timing of the first TWs reasonably well, depending on the CCVT type and amount of parasitic capacitance in the tuning reactor and the step-down transformer. Use a line energization test to assess the performance of your PT in terms of reproducing the very first TW in the primary voltage. Refer to *Section 11: Testing and Commissioning* for more details on the line energization test.

The TW32 element has no settings and provides a speed advantage of about 1 to 2 ms over the TD32 element. The TW32 element keys permission using a dedicated bit. Set ETW32 = Y to allow the TW32 element to accelerate permissive keying. Do not set ETW32 = Y in the following applications:

- Lines with a TW propagation time shorter than 50 µs (TWLPT < 50 µs)
- Hybrid lines with overhead and underground cable sections
- Tapped lines
- Multiterminal lines

Setting ETW32 = Y may bring only marginal gains if your POTT channel is relatively slow, such as if you use a power line carrier. Also, remember that using the TW32 element to accelerate the POTT operation requires an additional bit (KEYTW) in your protection channel that may be unavailable unless you use a digital channel for your POTT scheme. You will obtain the fastest operating time with ETW32 = Y if you use Port 6 for your POTT scheme.

STEP 12A. POTT Overcurrent Supervision for Desired Sensitivity

Set the TP67G and TP67P thresholds below the minimum fault current. In strong systems, you can set the thresholds at a fraction of the nominal current and avoid performing calculations. When in doubt or in applications to weak systems, use your short-circuit program to calculate the minimum fault current level under the worst-case scenario according to your protection philosophy and guidelines. This typically assumes a fault at the end of the line (at the remote bus), the weakest local system, the strongest remote system, and a certain fault resistance for single-line-to-ground (SLG) faults. Find the minimum short-circuit current for line-to-line (LL) and three-phase (3P) faults in secondary amperes. Typically, the results for LL faults and 3P faults will give identical results, and therefore you can choose to perform calculations for 3P faults only.

Obtain the phase incremental currents (ΔIA, ΔIB, and ΔIC) for each minimum fault current by subtracting—as complex numbers—the load current from the fault current. Often, a short-circuit program provides the fault component of the current directly. If so, do not subtract the load current (the load is zero). If the short-circuit program models the load current, subtract the particular load for which you obtained the fault current (you do not have to consider multiple load values).

Use the following procedure to calculate the TP67G setting.

➤ Use complex numbers algebra to convert the phase incremental currents for the SLG fault to the incremental replica ground loop current (AG loop) as follows:

$$\Delta IAG = \Delta IA + \left(\frac{Z0}{Z1} - 1\right) \bullet \Delta I0 = \Delta IA + \left(\frac{1}{3}\right) \bullet \left(\frac{Z0}{Z1} - 1\right) \bullet \Delta IG$$

Equation 6.5

where Z0 and Z1 are the line zero- and positive-sequence impedances, respectively; the $(1/3) \bullet (Z0/Z1 - 1)$ value is the k0 factor for the line.

Neglecting the load and using k0, *Equation 6.5* becomes:

$$\Delta IAG = IA + k0 \bullet IG$$

Equation 6.5a

➤ Apply a 50 percent dependability margin and set the POTT ground loop overcurrent supervision as follows:

$$TP67G = 0.50 \bullet |\Delta IAG|$$

Equation 6.6

Use the following procedure to calculate the TP67P setting.

➤ Use complex numbers algebra to convert the phase incremental currents for the LL fault to the incremental replica phase loop current (AB loop) as follows:

$$\Delta IAB1 = \Delta IA - \Delta IB$$

Equation 6.7

You can omit the LL fault calculations in most cases (when Z2 = Z1) and proceed to the 3P fault calculations.

➤ Use complex numbers algebra to convert the phase incremental currents for the 3P fault to the incremental replica phase loop current (AB loop) as follows:

$$\Delta IAB2 = \Delta IA - \Delta IB$$

Equation 6.8

Neglecting the load current, *Equation 6.8* becomes:

$$\Delta IAB2 = \sqrt{3} \bullet IA$$

Equation 6.8a

➤ Apply a 50 percent dependability margin and set the POTT ground loop overcurrent supervision as follows:

$$TP67P = 0.50 \bullet MIN(|\Delta IAB1|, |\Delta IAB2|)$$

Equation 6.9

Ensure that the TP67G and TP67P settings exceed 130 percent of the positive-sequence line charging current (I_{1C}):

$$TP67G > 1.30 \bullet I_{1C} \text{ and } TP67P > 1.30 \bullet \sqrt{3} \bullet I_{1C}$$

Equation 6.10

Note that the requirements of *Equation 6.10* do not apply to the setting of overcurrent supervision for the TW87 protection scheme (TP50G and TP50P settings). You can set the TP50G and TP50P overcurrent thresholds below 130 percent of the line charging current.

STEP 12B. POTT Overcurrent Supervision for Security When Switching Series Capacitors

Set the POTT overcurrent supervision trip levels (TP67P for phase faults and TP67G for ground faults) greater than the maximum incremental current caused by capacitor switching, as discussed in following text.

In applications with in-line series compensation (XC setting is greater than 0 at any line terminal), use the total impedance of the system and the line (ZTOT) to calculate the incremental replica loop current resulting from capacitor switching and set the TP67G and TP67P settings greater than the capacitor-switching current.

The vast majority of series-compensated lines are two-terminal lines. In two-terminal line applications, use your short-circuit program to obtain the local and remote system equivalent positive-sequence (Z1LOC, Z1REM) and zero-sequence (Z0LOC, Z0REM) impedances in secondary ohms on the effective CT ratio base. Apply at least a 25 percent security margin, and calculate the TP67G setting by using the following empirical formula:

$$TP67G = \frac{1.25}{\sqrt{3}} \bullet \frac{VNOM}{|ZTOT|}$$

Equation 6.11

where:

$$ZTOT = \frac{1}{2} \bullet \frac{Z1 \bullet Z0}{Z1 + Z0}$$

Equation 6.11a

$$Z1 = Z1LOC + Z1MAG\angle Z1ANG + Z1REM$$

Equation 6.11b

$$Z0 = Z0LOC + Z0MAG\angle Z0ANG + Z0REM$$

Equation 6.11c

and VNOM, Z1MAG, Z1ANG, Z0MAG, and Z0ANG are SEL-T400L settings.

Calculate the TP67P setting as follows:

$$TP67P = \sqrt{3} \bullet TP67G$$

Equation 6.12

The settings guidelines that *Equation 6.11* and *Equation 6.12* provide apply to lines with one or more series capacitors and cover the worst case when all series capacitors are switched in or out of service at exactly the same time.

When evaluating sensitivity of POTT protection, observe that the SEL-T400L scales the TP67G and TP67P settings with the prefault load current (see *Overcurrent Supervision Elements* on page 2.22). To check sensitivity for any given prefault load current (ILOAD), use the following derating formula:

$$\text{Effective TP67G} = \text{TP67G} \bullet \text{ILOAD} \bullet \frac{\text{XC} \bullet \sqrt{3}}{\text{VNOM}}$$

Equation 6.13

$$\text{Effective TP67P} = \text{TP67P} \bullet \text{ILOAD} \bullet \frac{\text{XC} \bullet \sqrt{3}}{\text{VNOM}}$$

Equation 6.14

where:

XC and VNOM are the SEL-T400L settings.

ILOAD is the load current magnitude in secondary amperes on the effective CT ratio.

For example, if the voltage drop across the series capacitor (ILOAD • XC) is 30 percent of the line-to-neutral nominal voltage ($\text{VNOM}/\sqrt{3}$), the POTT logic effectively uses 30 percent of the set TP67P and TP67G values. These 30 percent values are sufficient to ride through capacitor switching during a load current that produces 30 percent of nominal voltage drop across the capacitor.

Series-compensated lines are rarely multiterminal. Conduct a detailed simulation study or contact SEL to evaluate feasibility of the POTT logic on multiterminal series-compensated lines.

TW87 Scheme

Follow the steps in *Figure 6.11* to configure the TW87 scheme.

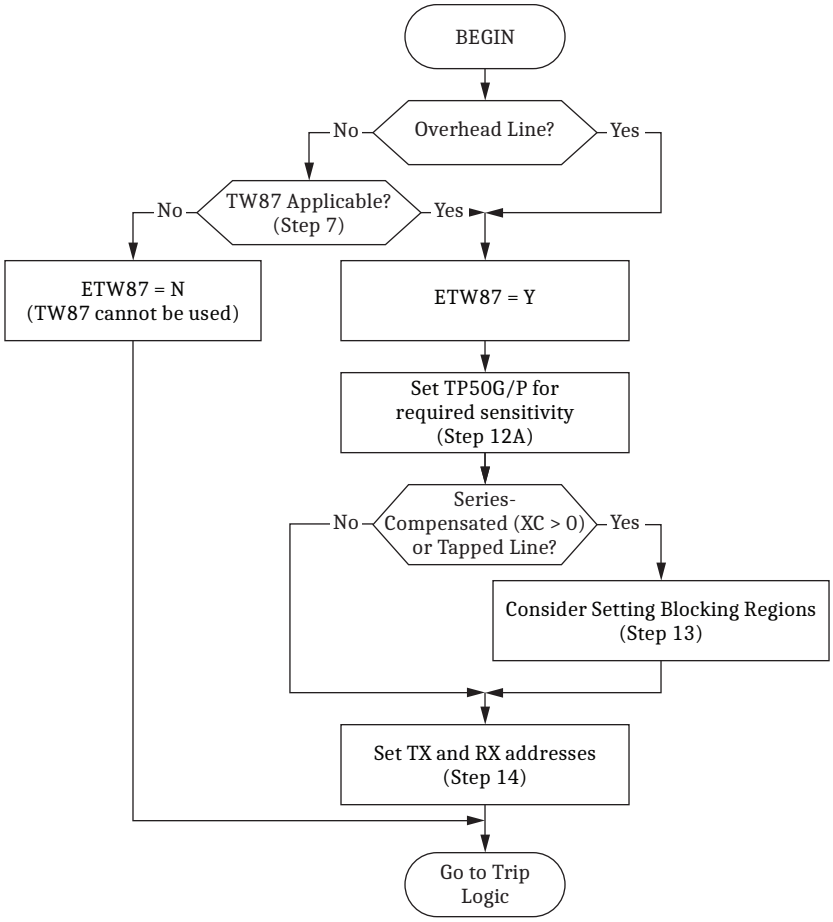

Figure 6.11 Configuring the TW87 Scheme

STEP 13. TW87 Blocking Regions

Use the blocking regions built into the TW87 logic to coordinate the TW87 protection scheme with protection systems on unmeasured line taps for selectivity during external faults downstream from the unmeasured taps. You may also consider using blocking regions to coordinate the TW87 scheme with the protection systems of in-line series capacitors. This coordination is not required for security of the TW87 scheme on series-compensated lines. The blocking region settings are available as advanced settings (set EADVS = Y to access the blocking region settings).

Set the TW87BL1 and TW87BL2 blocking locations to specify per-unit location of as many as two blocking regions. The location is defined as a distance from the local terminal. For example, if an unmeasured line tap is located 25 percent of the line length from the local terminal, set TW87BL1 = 0.25 pu for the local relay and TW87BL1 = 0.75 pu for the remote relay.

Set the TW87BR1 and TW87BR2 blocking radiuses to create blocking regions ±TW87BR1 from TW87BL1 and ±TW87BR2 from TW87BL2. SEL recommends 1 km (0.6 mi) for the blocking region margins.

STEP 14. Port 6 Transmitting and Receiving Addresses

Use the transmitting and receiving addresses to pair two SEL-T400L Relays and prevent unexpected operation resulting from accidental loopback or cross-connection.

Ensure unique transmitting addresses for a fleet of SEL-T400L Relays located in a vicinity where they could be accidentally cross-connected. Set the receiving address (87RADR) to match the transmitting address (87TADR) of the remote SEL-T400L protecting the same line. Never set 87RADR equal to 87TADR, except when performing the loopback test.

Disable the TW87 scheme (set ETW87 = N) for hybrid overhead and cable lines that do not meet the applicability criteria discussed in *STEP 7. Assessing SEL-T400L Applicability to Hybrid Lines* on page 6.11.

Trip Logic

Follow the steps in *Figure 6.12* to configure the trip logic.

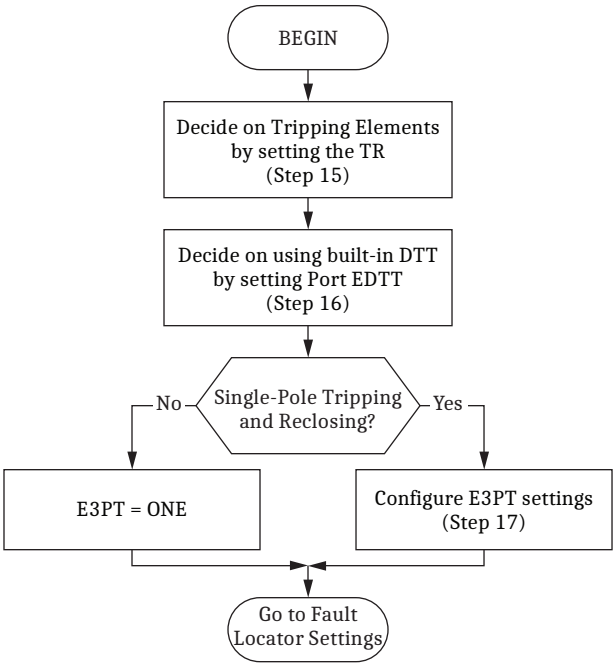

Figure 6.12 Configuring the Trip Logic

STEP 15. Local Tripping Elements and Schemes

Configure the TR setting by including all protection elements or relay inputs from which you want to initiate a trip. Typically, the TD21 element and the TW87 scheme are configured to trip, and the TR default setting is [TD21P, TD21G, TW87]. The POTT and DTT schemes are incorporated in the trip logic by default and there is no need to, neither should you, configure Relay Word bits related to the POTT or DTT in the TR setting. Configure the POTT and DTT schemes by using their respective EPOTT and EDTT port settings.

You may consider tripping the SEL-T400L outputs through use of a contact input or a MIRRORED BIT by including them in the TR setting, but be aware that the relay will execute such trips as three-pole trips if the local elements fail to assert

and identify the fault type. If you want to force the SEL-T400L to trip single-pole from another device, consider using the phase-segregated DTT bits over MIRRORED BITS communications.

Also, if you enabled DTT in the SEL-T400L, a trip initiated from a local relay (such as a breaker failure relay) through use of a contact input in the SEL-T400L, a MIRRORED BIT or the DTT bits will be communicated to the remote relay or relays. At the remote SEL-T400L Relay or SEL-T400L Relays, you may have difficulty in distinguishing between a DTT received from the SEL-T400L protection elements and schemes for a line fault from trips for other conditions such as from local breaker failure protection brought in using a contact input or a MIRRORED BIT. Apply caution when cross-tripping the SEL-T400L via inputs by using the TR setting or the DTT scheme.

STEP 16. DTT Communications

Use of MIRRORED BITS communications on Ports 1, 2, and 3 is an economical way to provide a DTT protection scheme with SEL-T400L Relays. Depending on the number of line terminals, enable the DTT scheme communications on one, two, or all three MIRRORED BITS communications ports (EDTT = Y on Ports 1, 2, and 3), and connect the ports you selected to one, two, or three remote SEL-T400L Relays in the DTT scheme (see *Direct Transfer Trip Logic* on page 2.48). Use an SEL-2814M (male connection) media converter to connect an SEL-T400L MIRRORED BITS port to a SONET or SDH multiplexer. Use an SEL remote I/O module such as the SEL-2507 to connect an SEL-T400L MIRRORED BITS port to such I/O teleprotection equipment as a PLC channel (see *Section 3: Protection Communications Channels* and *Section 10: Installation*). When using I/O communications for the DTT channel, such as with a PLC channel, limit any chance of a spurious direct trip pickup at the receiving relay by ensuring that you wire and ground your signals following the PLC manufacturer's recommendations. If possible, set a debounce time in the PLC equipment accordingly. Consider, however, that the DTT logic includes security debouncing: direct trip signals are accepted and processed immediately if the local relay detects a disturbance. If the local relay detects no disturbance, the DTT logic processes direct trips after 10 ms of intentional delay. If a direct trip asserts spuriously for less than 10 ms, the DTT logic will proceed through the spurious DTT signal assertion without misoperation.

In two-terminal applications, you can use the direct point-to-point fiber-optic channel connected on Port 6 to provide DTT communications (EDTT = Y on Port 6). Use the Port 6 channel as a primary DTT channel or as a redundant channel for the primary MIRRORED BITS channel on Port 1, 2, or 3.

The SEL-T400L sends and receives phase-segregated direct trip signals as MIRRORED BITS 4, 5, and 6, and you cannot reprogram them. When using the SEL-T400L in a DTT scheme with a different relay or relays at the remote terminal or terminals, remember to program MIRRORED BITS 4, 5, and 6 in these relays to represent direct trip signals sent to the SEL-T400L.

STEP 17. Single-Pole vs. Three-Pole Tripping

Set E3PT to ONE (Boolean logical 1) for three-pole tripping applications.

In single-pole tripping and reclosing applications, configure setting E3PT to specify conditions under which the relay must convert a single-pole trip for an SLG fault to a three-pole trip. Typically, you want to force a three-pole trip when the breaker cannot reclose following a single-pole trip, when system operators temporarily suspend single-pole tripping, or when the single-pole-and-reclose sequence is already in progress. Use a MIRRORED BIT or a digital input to bring this information from the autoreclosing relay to the SEL-T400L trip logic. The

SEL-T400L provides a TOP Relay Word bit to indicate a single-pole-and-reclose sequence in progress. If necessary, this bit can substitute for the external signal from your autoreclosing relay.

In single-pole tripping dual-breaker applications, use the E3PT1 and E3PT2 settings for the trip outputs TP1 and TP2, respectively, to decide if a given breaker will trip single-pole or three-pole. For example, in breaker-and-a-half bus arrangements, you may consider always tripping the middle breaker three-pole. If you choose such tripping, set E3PT*n* = ONE for the middle breaker.

The E3PT setting supersedes the E3PT1 and E3PT2 settings. If E3PT is asserted, the SEL-T400L trips both sets of outputs three-pole. If E3PT is deasserted, the SEL-T400L trips each set of outputs based on the value of the E3PT*n* setting. The E3PT1 and E3PT2 settings are available as advanced settings (set EADVS = Y to access E3PT1 and E3PT2).

Fault Locator Settings

Follow the steps in *Figure 6.13* to configure the SEL-T400L fault locator, and optionally, the associated autoreclose cancel logic.

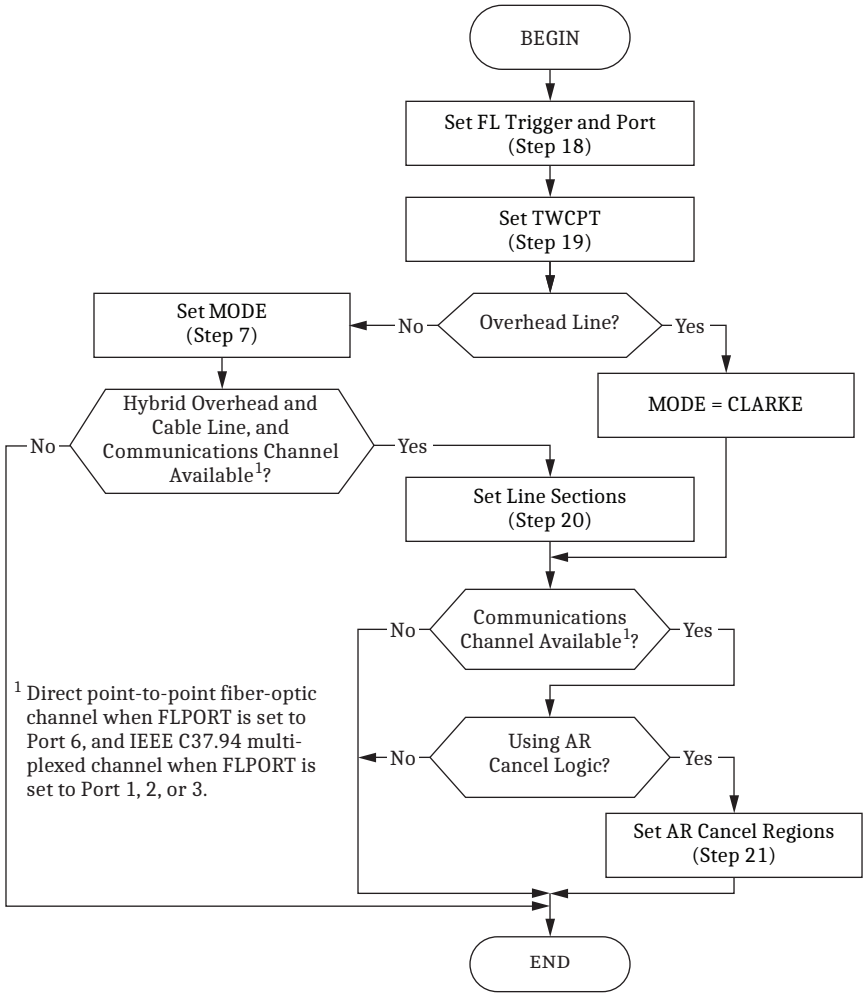

Figure 6.13 Configuring the Fault Locator and Autoreclose Cancel Logic

STEP 18. Fault Locator Trigger and Port

Trigger the fault locator for line faults by selecting Relay Word bits in the FL setting. The TRIP Relay Word bit is included in the fault locator trigger by default to initiate fault locating on internal SEL-T400L trips, including received direct transfer trips. Use a MIRRORED BIT or a contact input to initiate the fault locator on trips issued by other line relays.

In standalone fault locator applications, use a MIRRORED BIT or a digital input to initiate the fault locator. Optionally, you may configure the SEL-T400L protection elements, particularly TD21, to provide an internal SEL-T400L trigger in addition to the trip commands from protective relays. The SEL-T400L fault locator should be initiated on instantaneous trips.

When using double-ended methods, you must select a port to be used for fault locating. Set FLPORT to P6 if your application uses a direct fiber connection on Port 6. When FLPORT = P6, the relay executes both the double-ended TW-based and impedance-based methods. Set FLPORT to P1, P2, or P3 if your application uses an IEEE C37.94 multiplexed channel on the corresponding port. You must ensure the maximum channel latency is below 30 ms when using an IEEE C37.94 channel for fault locating. When FLPORT = P1, P2, or P3, the relay executes only the double-ended TW-based method and the TW-based and impedance-based single-ended methods. When using an IEEE C37.94 channel for double-ended TW-based fault locating, you must connect both relays to accurate time sources or else the relays will not execute the double-ended TW-based fault-locating method. See *Appendix H: High-Accuracy Timekeeping* for more information, time source requirements, and best practices.

STEP 19. CT Cable-Delay Compensation

Use the traveling-wave cable propagation time setting (TWCPT) to increase accuracy of the double-ended TW-based fault-locating method by compensating for the time delay associated with the CT secondary cables. Calculate the time delay by dividing the CT secondary cable length by the traveling-wave propagation velocity in your CT control cable (typically considerably slower than the speed of light in free space). You can use about 70 percent of the speed of light in free space to approximate the propagation velocity in control cables. For better results, consult your cable data sheet or contact the manufacturer to obtain the propagation velocity, or measure the velocity for any given cable type by using time-domain reflectometry. Refer to *Section 11: Testing and Commissioning* for more details on how to select the TWCPT setting.

The CT secondary cable compensation is only required for the double-ended TW-based fault-locating algorithm. The compensation is not needed if both relays use CT cables with the same propagation time (i.e., similar cable types with similar lengths). Assuming the traveling-wave propagation velocity for cables to be 70 percent of the speed of light in free space, 50 m of difference in cable length between line terminals may result in 36 m of fault location error for the double-ended traveling-wave method on an overhead line.

For best results in dual-breaker applications, use the same CT cable length for both CTs. If you have unequal CT cable lengths, use the average length of the two CT cables when calculating the CT cable propagation time.

Fault location reported by a single-ended TW-based fault-locating method, a single-ended impedance-based fault-locating method, or a double-ended impedance-based fault-locating methods is unaffected by the CT cable delay.

STEP 20. Line Sections for Hybrid Overhead and Underground Cable Lines

The SEL-T400L locates faults on hybrid overhead and underground cable lines, but only through use of the double-ended TW-based fault-locating method. It therefore requires either a direct point-to-point fiber-optic channel on Port 6 or an IEEE C37.94 multiplexed channel on Port 1, 2, or 3. When using an IEEE C37.94 channel with this application, you must connect both relays to accurate time sources, such as IEEE C37.118-compliant satellite clocks.

The relay calculates accurate fault location for hybrid lines when you provide the line nonhomogeneity data by specifying individual line sections.

The line length setting (LL) specifies the total line length and the line propagation time setting (TWLPT) specifies the propagation time for the entire line, irrespective of whether the line is homogeneous or nonhomogeneous. These two settings are always used to specify the line as a whole, even if the line is built from a number of nonhomogeneous sections.

In applications with nonhomogeneous hybrid lines, enter the length (LL*x*) and propagation time (TWLPT*x*) for each section *x*. Use the same unit for the section length as for the LL setting. The relay allows as many as five sections, but you only have to specify as many as four sections. The final section (LL5 and TWLPT5 settings) is calculated by the relay as the balance between the total line (LL length and TWLPT propagation time) and the sum of the specified sections. Review and verify the accuracy of the data for the last section as a check for your data.

For example, consider a line comprising an 80 km overhead section, followed by a 5 km cable section, followed by a 90 km overhead section. Set LL = 175 km, LL1 = 80 km, and LL2 = 5 km. Leave LL3 and LL4 at their default OFF values. Ensure that LL5 = 90 km. Set the corresponding propagation times TWLPT, TWLPT1, and TWLPT2, and inspect the TWLPT5 value to check your data.

Refer to *Section 11: Testing and Commissioning* for information on how to obtain the TW propagation time during relay commissioning, including for nonhomogeneous lines.

STEP 21. Adaptive Autoreclose Cancel Application

The adaptive autoreclose cancel logic is operational only if the relay uses the double-ended TW-based fault-locating method. It therefore requires either a direct point-to-point fiber-optic channel on Port 6 or an IEEE C37.94 multiplexed channel on Port 1, 2, or 3. When using an IEEE C37.94 channel in adaptive autoreclose cancel applications, you must connect both relays to accurate time sources, such as IEEE C37.118-compliant satellite clocks.

Apply this feature to hybrid overhead and underground cable lines. Based on the accurate real-time fault-locating calculations, this feature allows you to distinguish faults on the overhead sections from faults on the cable sections. Knowing where the fault is, you can allow autoreclosing for faults on the overhead line but prevent autoreclosing for faults on the cable sections. You may also consider using this feature to block reclosing for faults close to large generating stations.

Specify the beginnings (ARC1B and ARC2B) and ends (ARC1E and ARC2E) of as many as two regions where autoreclosing will not be allowed. The settings are in LL units, and the regions are defined from the local terminal. Use a 2–3 percent margin or 1 km (0.6 mi), whichever is greater, to ensure that autoreclose is canceled for faults near the transition points between the overhead and cable sections. For example, for a cable section located between 75 km and 90 km on a 150 km line, you may set the blocking region as ARC1B = 75 km – 0.02 • 150 km = 72 km, and ARC1E = 90 km + 0.02 • 150 km = 93 km.

Configure the default output of the autoreclose cancel logic for cases when the double-ended traveling-wave-based fault-locating method fails to locate a fault. Causes of such a failure can include the fiber-optic differential channel being down or a fault at the voltage zero-crossing resulting in no or small current traveling waves. Use ARCD = 1 to cancel and ARCD = 0 to allow autoreclosing for the entire line if the SEL-T400L fails to locate the fault.

The SEL-T400L provides the autoreclose cancel Relay Word bit, ARC, as output MIRRORED BIT 7 on all three MIRRORED BITS ports. Use an SEL-2507 or any other SEL remote I/O module to provide this signal to autoreclose relays incapable of using MIRRORED BITS communications.

In standalone fault-locating applications, you can use trip outputs to provide the ARC bit to the autoreclose relays. Configure the ARC bit in the TR setting to activate all six trip outputs from the ARC bit.

Reports Settings

Configure the Sequential Events Recorder (SER) and the event report (oscillography) of the SEL-T400L to obtain valuable information about the relay operation and the state of relay inputs and outputs, including bits received over protection channels, for post-event analysis.

Configuring the Sequential Events Recorder

Specify as many as 96 Relay Word bits (digital points) to be logged in the SEL-T400L SER. Use four separate SER lists (SER1 through SER4), each supporting as many as 24 items, to logically group your choices and support standardization of your SER settings across multiple SEL-T400L applications.

Remember that the event report (i.e., the TDR COMTRADE records) includes all SEL-T400L Relay Word bits by default. These bits help in post-event analysis related to operation of protection elements, especially under transients. Therefore, the event report and the SER contain redundant information and you may consider including only major indications of the relay status and operation in the SER. Select Relay Word bits associated with assertion of the protection elements you configured for tripping, LOP condition, sent and received permissive and direct trips, status of the protection channels, etc. Avoid including bits that are redundant or which bring little extra information. Include only items that are related to the functionality you enabled. For example, do not monitor MIRRORED BITS ports that you left disabled.

Table 6.2 through *Table 6.5* list default SER digital points. The tables group these points into four categories for ease of list maintenance. Remove or replace items that do not apply to your particular application.

Consider enabling automatic removal of chattering SER points by setting ESERDEL = Y if you suspect that you may have chattering points. For example, if you troubleshoot an intermittent MIRRORED BITS connection that may result in ROKP*n* point chatter, you may want to enable ESERDEL.

Follow the explanation in *Section 5: Fault and Event Recording* to select settings associated with the automatic removal of chattering SER points (SRDLCNT [number of points before removal] and SRDLTIM [time for automatic removal]).

Table 6.2 SER1 Default Settings With Comments

No.	Relay Word Bit	Description	Comments
1	TPA	Phase A trip	Monitor relay trips on a per-phase basis
2	TPB	Phase B trip	
3	TPC	Phase C trip	
4	TD21P	TD21 phase distance operated	Monitor TD21 element operation
5	TD21G	TD21 ground distance operated	
6	TD32F	TD32 directional element asserted forward	Monitor direction of the event by using the TD32 directional element
7	TD32R	TD32 directional element asserted reverse	
8	TW87	TW87 scheme operated	Monitor TW87 scheme operation
9	START	Starting logic asserted	Monitor starting logic operation
10	TDOUT	Time-out following a protection start	
11	BLK	BLK contact input asserted	Monitor the blocking contact input
12	ALPARM	All protection measurement loops armed	Monitor starting logic operation

Table 6.3 SER2 Default Settings With Comments

No.	Relay Word Bit	Description	Comments
1	KEYA	Transmit permissive trip signal; Phase A, B, and C, respectively	Monitor permissive trip keying of the POTT scheme on a per-phase basis
2	KEYB		
3	KEYC		
4	PTRXA	Supervised permissive trip received; Phase A, B, and C, respectively	Monitor POTT permissive trips received on a per-phase basis
5	PTRXB		
6	PTRXC		
7	DTRXA	Supervised direct transfer trip received; Phase A, B, and C, respectively	Monitor DTT direct trips received on a per-phase basis
8	DTRXB		
9	DTRXC		

Table 6.4 SER3 Default Settings With Comments (Sheet 1 of 2)

No.	Relay Word Bit	Description	Comments
1	LOP	Loss-of-potential condition	Monitor loss-of-potential condition
2	OPA	Pole A open	Monitor open-pole condition
3	OPB	Pole B open	
4	OPC	Pole C open	
5	ROKP1	MIRRORED BITS Port 1 operating correctly	Monitor the status of the MIRRORED BITS protection channels on a per-port basis (only include ports that are enabled and in use)
6	ROKP2	MIRRORED BITS Port 2 operating correctly	
7	ROKP3	MIRRORED BITS Port 3 operating correctly	

Table 6.4 SER3 Default Settings With Comments (Sheet 2 of 2)

No.	Relay Word Bit	Description	Comments
8	TW87OK	Relay receives time-synchronized data over Port 6	Monitor the direct point-to-point fiber-optic channel on Port 6 (include if Port 6 is in use)
9	FREQOK	Frequency measurement is locked and accurate	Monitor frequency measurement to understand if the incremental quantities are accurate
10	TIRIG	Relay receives a valid IRIG-B signal	Monitor the source of the local time

Table 6.5 SER4 Default Settings With Comments

No.	Relay Word Bit	Description	Comments
1	LMEVE	Line monitoring new event detected[a]	Log the line monitor operation and alarms.
2	LMA	Line monitoring alarm	
3	LMAB1	Line monitoring Blocking Region 1 alarm	
4	LMAB2	Line monitoring Blocking Region 2 alarm	
5	VILEMI	EMI activity detected in local voltages or currents	Monitor the EMI at the relay location
6	ILREMI	EMI activity detected in local or remote currents	Monitor the EMI at the remote relay (in applications with the direct point-to-point fiber-optic channel only)
7	SALARM	OR combination of TWTEST, PLAY, PLAYP, BADPASS, and SETCHG	Monitor software alarms
8	HALARM	OR combination of HALARMP and HALARML	Monitor hardware alarms
9	PULSE	Asserts when you use the **PULSE** command to test relay outputs	Monitor pulse command provided for testing relay outputs

[a] 20 ms pulse.

Configuring the Event Report

The analog channels of the event report are preconfigured and include voltages and currents, derived signals for ease of post-event analysis (see *Appendix G: Signal Processing*), and all Relay Word bits. You do not need to configure the analog and digital channels of the SEL-T400L event recorder, and you cannot deselect the factory-preconfigured event report content.

Select as many as 24 Relay Word bits (digital points) in the ER trigger setting for the SEL-T400L event report. The FL and TRIP Relay Word bits are included by default. Consider other triggers based on your application. *Table 6.6* lists the default ER settings and provides additional explanation.

Table 6.6 ER Default Settings With Comments

No.	Relay Word Bit	Description	Comments
1	EVNTPKP	Event with potential to cause SEL-T400L protection operation detected	Use the EVNTPKP Relay Word bit when evaluating the relay in the field. EVNTPKP asserts on events that are significant enough to assert an overcurrent supervision for at least one of the protection elements and schemes that are enabled and configured to trip (see *Figure 6.14*).
2	LMA	Line monitoring alarm	Capture voltage and current signals when the line monitoring alarm is triggered and validate the line monitor operation.
3	LOP	Loss-of-potential condition	Capture voltage and current signals for an LOP event to help diagnose the LOP problem.
4	PTRXA	Supervised permissive trip received; Phase A, B, and C, respectively	Capture local voltages and currents when permissive trips are received.
5	PTRXB		
6	PTRXC		
7	DINVLS	Invalid or clipped local voltage or current data	Capture local voltages and currents when problems are detected with the local voltages and currents as processed by the internal circuitries of the relay.

The SEL-T400L includes logic to help you evaluate protection security of your pilot installations in the field or during batch testing with automated test scripts. *Figure 6.14* shows the EVNTPKP logic. This logic asserts if the overcurrent supervision picks up for one or more of these relay tripping elements and schemes which are enabled and configured to trip. The EVNTPKP Relay Word bit asserts for events that generate enough incremental current to satisfy the overcurrent supervision condition for an element or a scheme. With the overcurrent condition asserted, an element or a scheme must restrain based on its operating principle, without reliance on low current to hold the element or the scheme back. Therefore, each time the EVNTPKP Relay Word bit asserts, the SEL-T400L is tested for performance either using normally occurring events in the field or during batch testing in the laboratory.

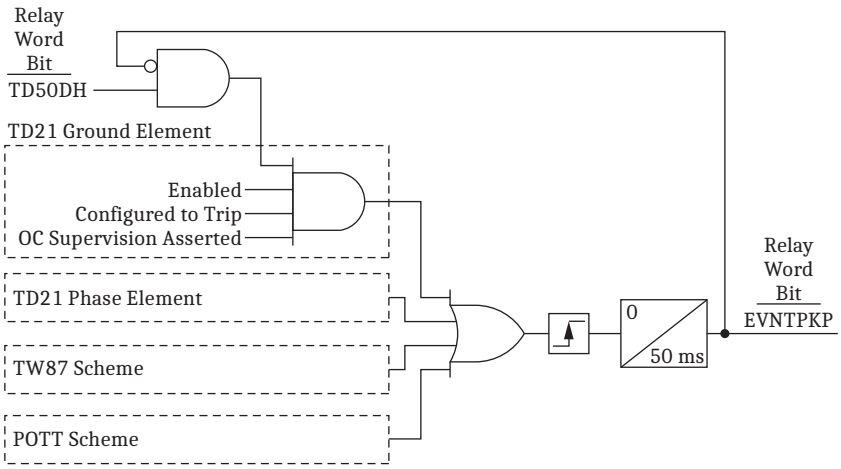

Figure 6.14 Simplified EVNTPKP Logic

The EVNTPKP Relay Word bit drives an EVNTCNT counter. Similarly, the TRIP Relay Word bit drives a TRPCNT counter. SEL recommends you reset both counters at the beginning of the relay evaluation by using the **HIS C** command. If you upgrade relay firmware during the field evaluation period, you may consider making a record of the counter values before the upgrade and optionally resetting the counters. Firmware upgrades may result in losing some of the nonvolatile data, so it is a good practice to save records and counters prior to the upgrade. During the course of the evaluation, you can obtain these counters from the header file of the SEL-T400L COMTRADE record. Inspect these counters to see how many times the relay was exposed to considerable transients (the EVNTCNT counter) and how many times the relay tripped (the TRPCNT counter). Use these values to methodically evaluate security of the relay in your pilot installation with the settings you applied.

Add other triggers based on your application. *Table 6.7* list other candidates for the ER trigger and their intended applications.

Table 6.7 Frequently Used ER Triggers and Their Applications

Relay Word Bit	Description	Application	Precautions
TWDD	Traveling-wave disturbance detector asserted	Extremely sensitive nondirectional trigger based on traveling-wave disturbance detection. Use when investigating high-frequency events on the line or in the vicinity.	TWDD triggers on all switching events (even for events located far from the terminal). Using this trigger may fill the available memory very quickly.
START	Starting logic asserted	Sensitive nondirectional trigger that will assert for faults and switching events in immediate proximity to the terminal.	Using this trigger may fill the available memory relatively quickly.

Current Transformer Requirements

The SEL-T400L is an ultra-high-speed line protective relay that operates in milliseconds for line faults. Taking advantage of fast operation, the relay engages extra security measures quickly following a disturbance. As a result, the SEL-T400L is not affected by CT saturation if the CT time to saturation is longer than the short time before the extra security measures are in place.

Verify that installed CTs are adequate for the SEL-T400L, or select CTs in new installations, by using the following recommendations.

CT Ratio

If possible, select CT ratio in such a way that the emergency line load current approximately equals the CT nominal current. When using CTs with the nominal current much greater than the average line load current, such as in dual-breaker applications, ensure that your current-related settings (TP67P/G, TP50P/G, Z1MAG, and Z0MAG) fit the relay settings ranges.

General CT Requirements

The CT sizing guidelines for the SEL-T400L rely on the CT time to saturation for external faults close to the line terminals. The CT sizing rule is based on the CT sizing factor, K_{TD}, corresponding to the saturation-free CT operation time interval with a zero remanence flux that the SEL-T400L requires for security.

Apply $K_{TD} = 6$ when sizing CTs for SEL-T400L applications.

Fault Current Calculations

For each CT of the SEL-T400L line protection scheme, consider fault locations at all line terminals external to the line zone of protection. *Figure 6.15* shows an example of a line with two breaker CTs (CT-1 and CT-2) and one in-line CT (CT-3). For each CT you select, consider all fault locations in order to find the highest current flowing through that CT for any external fault.

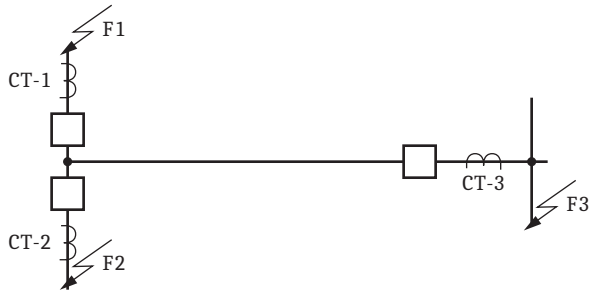

Figure 6.15 Sample Application Showing Fault Locations for Sizing CTs

In three- and four-terminal applications, consider faults at all remote terminals when sizing the local CT or CTs.

For each fault location, calculate the CT currents for a three-phase fault and a single-line-to-ground fault. Perform CT sizing calculations for the two fault types separately, and select the worst case for the final result.

CT and Application Parameters

You will need the following parameters for CT sizing calculations:

K_{TD}	SEL-T400L-specific CT oversizing factor; $K_{TD} = 6$
I_F	CT primary current for a fault (symmetrical current, rms value)
I_n	CT nominal secondary current
N	CT ratio (CTRW or CTRX relay setting accordingly)
R_{CT}	Resistance of the CT secondary winding
R_B	Total CT external burden resistance (assume SEL-T400L burden to be 0 ohms and remember to factor in the return lead of the CT cable for single-line-to-ground fault calculations)
VA	Volt-ampere CT rating (for IEC calculations only)

CT Selection Based on ANSI Specifications

Calculate the CT saturation (C-class) voltage, assuming $K_{TD} = 6$, as follows:

$$V_{SAT} = K_{TD} \bullet \frac{I_F}{N} \bullet R_B$$

Equation 6.15

Apply *Equation 6.15* for all external fault locations for three-phase and single-line-to-ground fault types. Obtain the maximum value of the saturation voltage, $V_{SAT(max)}$, considering both fault types and all fault locations.

Make sure your CT has a saturation (C-class) voltage not less than the maximum value from *Equation 6.15*, $V_{SAT(max)}$. You can also use *Equation 6.15* to determine other parameters of the CT. Specifically, you can calculate the maximum CT burden given the saturation voltage and CT ratio; or you can calculate the CT ratio given the saturation voltage and CT burden.

Section 7: Protection Applications Examples provides a numerical example of selecting CTs for SEL-T400L applications.

CT Selection Based on IEC Specifications

Calculate the CT-rated equivalent limiting secondary emf as follows:

$$E_{AL} = K_{TD} \bullet \frac{I_F}{N} \bullet (R_{CT} + R_B)$$

Equation 6.16

Apply *Equation 6.16* for all external fault locations for three-phase and single-line-to-ground fault types. Obtain the maximum value of E_{AL} ($E_{AL(max)}$) considering both fault types and all fault locations.

Calculate the rated Accuracy Limit Factor (ALF) through use of the following formula:

$$ALF = \frac{E_{AL(max)}}{\frac{VA}{I_n} + I_n \bullet R_{CT}}$$

Equation 6.17

Make sure your CT has a rated symmetrical short-circuit current factor not less than the value from *Equation 6.17*. You can also use *Equation 6.16* and *Equation 6.17* to determine other parameters of the CT. Specifically, you can calculate the maximum CT burden given the E_{AL} value and CT ratio; or you can calculate the CT ratio given the E_{AL} value and CT burden.

Section 7: Protection Applications Examples provides a numerical example of selecting CTs for SEL-T400L applications.

This page intentionally left blank

SECTION 7

Protection Applications Examples

Overview

This section provides the following SEL-T400L application examples:

- *Example 1. Two-Terminal Overhead Transmission Line on page 7.1*
- *Example 2. Two-Terminal Series-Compensated Overhead Transmission Line on page 7.11*
- *Example 3. CT Selection on page 7.19*

Settings examples include calculations for key protection settings and simplified diagrams showing connections among the SEL-T400L and CTs, breaker failure relays, and autoreclosing relays as necessary.

Example 1. Two-Terminal Overhead Transmission Line

Consider the two-terminal overhead line with an SEL-T400L (R1), as shown in *Figure 7.1*.

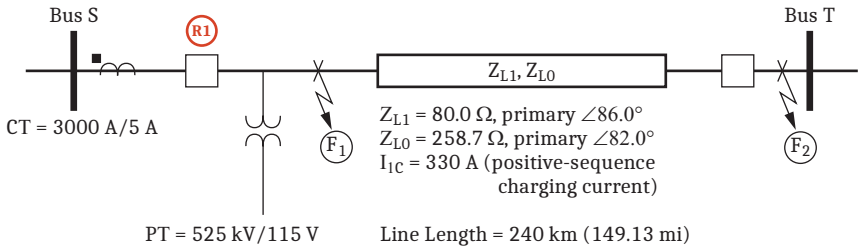

Figure 7.1 Single-Breaker Two-Terminal Overhead Transmission Line

This example assumes the following protection philosophy and requirements:

- Phase and ground underreaching directly tripping element (TD21)
- Permissive Overreaching Transfer Trip (POTT) scheme by using an IEEE C37.94-compliant multiplexer (DS0 channel) and a point-to-point fiber-optic channel
- Traveling-wave differential (TW87) scheme
- Direct Transfer Trip (DTT) scheme by using an IEEE C37.94-compliant multiplexer (DS0 channel) and a point-to-point fiber-optic channel
- Single-pole tripping with an external autoreclose (AR) relay
- An external breaker failure (BF) relay
- Protection against single-line-to-ground faults with a fault resistance of as much as 100 Ω

Begin by calculating the current transformer and potential transformer ratios and then use them to convert the line impedances from primary to secondary values.

$$CTR = 3000\ A/5\ A = 600 \qquad PTR = 525000\ V/115\ V = 4565.22$$

$$Z_{L1_SEC} = z_{L1} \bullet \frac{CTR}{PTR} = 80.0\ \Omega\angle 86.0° \bullet \frac{600}{4565.22} = 10.51\ \Omega\angle 86.0°$$

$$Z_{L0_SEC} = z_{L0} \bullet \frac{CTR}{PTR} = 258.7\ \Omega\angle 82.0° \bullet \frac{600}{4565.22} = 34.0\ \Omega\angle 82.0°$$

$$I_{1C_SEC} = \frac{I_{1C}}{CTR} = \frac{330\ A}{600} = 0.55\ A$$

This example follows the settings order in ACSELERATOR QuickSet SEL-5030 Software. The following tables include values and descriptions for settings used in Example 1.

Device

Table 7.1 General Setting

Setting Name	Set Value	Unit	Comment
EADVS	Y	N/A	Set to Y in order to access the ETW32 advanced setting.

Table 7.2 Power System, AC Inputs

Setting Name	Set Value	Unit	Comment
NFREQ	60	Hz	Set to match nominal frequency of the power system.
PHROT	ABC	N/A	Set to match phase rotation of the buses connected by the protected line.
LINEI	IW	N/A	Wire the line CT to the IW current inputs of the relay.
CTRW	600	N/A	CT ratio.
PTR	4565.22	N/A	PT ratio.
VNOM	115	V, secondary	Nominal line-to-line secondary voltage of the PT.

Table 7.3 Power System, Line Configuration (Sheet 1 of 2)

Setting Name	Set Value	Unit	Comment
Z1MAG	10.51	Ω, secondary	Positive-sequence line impedance magnitude.
Z1ANG	86.0	deg	Positive-sequence line impedance angle.
Z0MAG	34.00	Ω, secondary	Zero-sequence line impedance magnitude.
Z0ANG	82.0	deg	Zero-sequence line impedance angle.
LL	149.13 or 240.00	N/A	Set the line length in the unit you prefer. For this example, enter 149.13 and set LLUNIT = mi if you prefer miles, or 240.00 and set LLUNIT = km if you prefer kilometers.

Table 7.3 Power System, Line Configuration (Sheet 2 of 2)

Setting Name	Set Value	Unit	Comment
TWLPT	816.33	µs	Set the traveling-wave line propagation time. Expect the following value, assuming a propagation velocity of 98 percent of the speed of light in free space: 240 km / (0.98 • 300 000.00 km/s) = 816.33 µs. SEL recommends updating this value based on test results obtained during commissioning (see *Measuring Line Propagation Time During Line Energization Test on page 11.50*).
XC	0.00	Ω, secondary	Because the line is not series-compensated, set XC = 0.
EXTSC	N	N/A	There is no external series compensation in this example (see *STEP 6. External Series Compensation on page 6.10* for information on how to determine the EXTSC for a given terminal of your protected line).

Protection Elements

Traveling-Wave Differential Element

Following the assumed protection philosophy and requirements, enable the TW87 scheme (ETW87 = Y).

TP50G Setting

In your short-circuit program, configure the power system model so that the source behind Bus S is at its expected weakest value (highest impedance) and the source behind Bus T is at its expected strongest value (lowest impedance). Apply an AG fault with 100 Ω fault resistance, per your application requirements, at location F_2 in *Figure 7.1*. Record the phase and ground currents at the relay location for the fault.

Most short-circuit programs calculate fault values assuming zero prefault load:

$$I_{A_PRE} = 0.0 \text{ A}$$
$$I_{B_PRE} = 0.0 \text{ A}$$
$$I_{C_PRE} = 0.0 \text{ A}$$

Fault Currents (AG Fault With R_F = 100 Ω):

$$I_{A_FLT} = 321.0 \text{ A}\angle 0.0°$$
$$I_{B_FLT} = 48.0 \text{ A}\angle 173.0°$$
$$I_{C_FLT} = 48.0 \text{ A}\angle 173.0°$$
$$I_{G_FLT} = 226.0 \text{ A}\angle 3.0°$$

NOTE: When voltage is not required to determine settings, the following examples use the A-phase fault current (I_{A_FLT}) as the phase angle reference. If voltage is required, the A-phase prefault voltage (V_{A_PRE}) provides the phase angle reference.

Calculate the magnitude of the incremental replica current for the AG loop ($|\Delta I_{AG}|$). Incremental current is calculated by subtracting the prefault current (I_{A_PRE}) from the fault current (I_{A_FLT}). The incremental replica loop current is then obtained by calculating the incremental current in the faulted loop through use of *Equation 6.5 on page 6.16*:

$$\begin{aligned}|\Delta I_{AG}| &= \left|\Delta I_A + \frac{1}{3} \bullet \Delta I_G \bullet \left(\frac{Z_{L0}}{Z_{L1}} - 1\right)\right| \\ &= \left|321.0\ \text{A}\angle 0.0° + \frac{1}{3} \bullet 226.0\ \text{A}\angle 3.0° \bullet \left(\frac{34.0\ \Omega\angle 82.0°}{10.51\ \Omega\angle 86.0°} - 1\right)\right| \\ &= 489.8\ \text{A}\end{aligned}$$

where the incremental currents are:

$$\begin{aligned}\Delta I_A &= I_{A_FLT} - I_{A_PRE} \\ &= 321.0\ \text{A}\angle 0.0° - 0.0\ \text{A} \\ &= 321.0\ \text{A}\angle 0.0° \\ \Delta I_G &= I_{G_FLT} - I_{G_PRE} \\ &= 226.0\ \text{A}\angle 3.0° - 0.0\ \text{A} \\ &= 226.0\ \text{A}\angle 3.0°\end{aligned}$$

Convert the $|\Delta I_{AG}|$ value to secondary amperes:

$$\begin{aligned}|\Delta I_{AG_SEC}| &= \frac{|\Delta I_{AG}|}{CTR} \\ &= \frac{489.8\ \text{A}}{600} \\ &= 0.816\ \text{A}\end{aligned}$$

Calculate the TP50G threshold setting by using a 50 percent margin per *Equation 6.6 on page 6.16*:

$$\begin{aligned}TP50G &= 0.5 \bullet |\Delta I_{AG_SEC}| \\ &= 0.5 \bullet 0.816\ \text{A} \\ &= 0.41\ \text{A}\end{aligned}$$

TP50P Setting

With the same system configuration, simulate a zero-resistance line-to-line fault and a three-phase fault at fault location F_2 (shown in *Figure 7.1*). For both fault cases, record the phase fault currents measured by the relay (R1).

Line-to-Line Fault

Fault currents for a zero-resistance line-to-line fault (AB fault) at fault location F_2 are calculated below. Assume prefault currents are the same as for the AG fault case (i.e., zero).

Fault Currents (AB Fault):

$$\begin{aligned}I_{A_FLT} &= 1363.8\ \text{A}\angle 0.0° \\ I_{B_FLT} &= 1363.8\ \text{A}\angle 180.0° \\ I_{C_FLT} &= 0.0\ \text{A}\end{aligned}$$

Calculate the incremental replica current for the AB fault loop through use of *Equation 6.7*:

$$\begin{aligned} \left|\Delta I_{AB1}\right| &= \left|\Delta I_A - \Delta I_B\right| \\ &= \left|1363.8\ \text{A}\angle 0.0° - 1363.8\ \text{A}\angle 180.0°\right| \\ &= 2727.6\ \text{A} \end{aligned}$$

Convert the $|\Delta I_{AB1}|$ value to secondary amperes:

$$\begin{aligned} \left|\Delta I_{AB1_SEC}\right| &= \frac{\left|\Delta I_{AB1}\right|}{CTR} \\ &= \frac{2727.6\ \text{A}}{600} \\ &= 4.55\ \text{A} \end{aligned}$$

Three-Phase Fault

The phase currents at the relay location for a three-phase fault at location F_2 are calculated as follows.

Fault Currents:

$$\begin{aligned} I_{A_FLT} &= 1575.0\ \text{A}\angle 0.0° \\ I_{B_FLT} &= 1575.0\ \text{A}\angle -120.0° \\ I_{C_FLT} &= 1575.0\ \text{A}\angle 120.0° \end{aligned}$$

Assume prefault currents are the same as for the AG fault (i.e., zero). Using *Equation 6.8*, calculate the AB-loop current.

$$\begin{aligned} \left|\Delta I_{AB2}\right| &= \left|\Delta I_A - \Delta I_B\right| \\ &= \left|1575.0\ \text{A}\angle 0.0° - 1575.0\ \text{A}\angle -120.0°\right| \\ &= 2727.8\ \text{A} \end{aligned}$$

Convert the $|\Delta I_{AB2}|$ value to secondary amperes:

$$\begin{aligned} \left|\Delta I_{AB2_SEC}\right| &= \frac{\left|\Delta I_{AB2}\right|}{CTR} \\ &= \frac{2727.8\ \text{A}}{600} \\ &= 4.55\ \text{A} \end{aligned}$$

Then use *Equation 6.9 on page 6.16* to determine the TP50P setting:

$$\begin{aligned} TP50P &= 0.5 \bullet \text{MIN}(\left|\Delta I_{AB1}\right|, \left|\Delta I_{AB2}\right|) \\ &= 0.5 \bullet \text{MIN}(4.55\ \text{A}, 4.55\ \text{A}) \\ &= 2.27\ \text{A} \end{aligned}$$

Note: In this example, only a small part of an actual transmission system was modeled in the short-circuit program to obtain the short-circuit currents and voltages. The model consisted of only transmission lines and ideal power sources. For a transmission line $Z_{L1} = Z_{L2}$, therefore, a phase-to-phase fault and a three-phase fault produce the same incremental fault currents on this ideally modeled power system. In actual power systems, $Z_1 \neq Z_2$ ($Z_1 \neq Z_2$ in a synchronous generator), and therefore SEL recommends considering both fault types.

Incremental-Quantity Directional Elements

TD32ZF Setting

Configure the short-circuit program so that the source behind Bus S is the strongest. Then apply a three-phase fault at fault location F_1 (as shown in *Figure 7.1*) and record the prefault and fault voltages and currents.

Prefault Values:

$$V_{A_PRE} = 303.11\ \text{kV}\angle 0.0° \qquad I_{A_PRE} = 0.0\ \text{A}$$
$$V_{B_PRE} = 303.11\ \text{kV}\angle -120.0° \qquad I_{B_PRE} = 0.0\ \text{A}$$
$$V_{C_PRE} = 303.11\ \text{kV}\angle 120.0° \qquad I_{C_PRE} = 0.0\ \text{A}$$

Fault Values:

$$V_{A_FLT} = 0.0\ \text{kV} \qquad I_{A_FLT} = 9971.0\ \text{A}\angle -87.0°$$
$$V_{B_FLT} = 0.0\ \text{kV} \qquad I_{B_FLT} = 9971.0\ \text{A}\angle 153.0°$$
$$V_{C_FLT} = 0.0\ \text{kV} \qquad I_{C_FLT} = 9971.0\ \text{A}\angle 33.0°$$

Determine the magnitude of the positive-sequence source impedance:

$$\begin{aligned} |Z_{S1}| &= \left| -\frac{\Delta V_A}{\Delta I_A} \right| \\ &= \left| -\frac{303.11\ \text{kV}\angle 180.0°}{9971.0\ \text{A}\angle -87.0°} \right| \\ &= 30.4\ \Omega \end{aligned}$$

where:

$$\begin{aligned} \Delta V_A &= V_{A_FLT} - V_{A_PRE} \\ &= 0.0\ \text{kV} - 303.11\ \text{kV}\angle 0.0° \\ &= 303.11\ \text{kV}\angle 180.0° \\ \Delta I_A &= I_{A_FLT} - I_{A_PRE} \\ &= 9971.0\ \text{A}\angle -87.0° - 0.0\ \text{A} \\ &= 9971.0\ \text{A}\angle -87.0° \end{aligned}$$

Convert the positive-sequence source impedance magnitude from primary ohms to secondary ohms:

$$\begin{aligned} |Z_{S1_SEC}| &= |Z_{S1}| \bullet \frac{CTR}{PTR} \\ &= 30.4\ \Omega \bullet \frac{600}{4565.22} \\ &= 4.0\ \Omega \end{aligned}$$

Use a 70 percent margin per *Equation 6.3 on page 6.12* to calculate the impedance magnitude for the TD32ZF setting:

$$\begin{aligned} TD32ZF &= 0.3 \bullet |Z_{S1_SEC}| \\ &= 0.3 \bullet 4.0\ \Omega \\ &= 1.2\ \Omega \end{aligned}$$

TD32ZR Setting

To determine the impedance value of the reverse impedance threshold (TD32ZR), ignore the impedance of the remote source and consider only the positive-sequence impedance of the transmission line (Z_{L1_SEC}). Use a 70 percent margin per *Equation 6.4 on page 6.12* to calculate the impedance magnitude for the TD32ZR setting:

$$\begin{aligned} TD32ZR &= 0.3 \bullet \left|Z_{L1_SEC}\right| \\ &= 0.3 \bullet 10.5\ \Omega \\ &= 3.15\ \Omega \end{aligned}$$

Incremental-Quantity Distance Element

Set the phase and ground distance element reach setting according to the best practices of your company. For this example, the phase distance element reach (TD21MP) is set at 75 percent of Z1MAG and the ground distance element (TD21MG) is set at 70 percent.

TD21MP = 0.75 pu

TD21MG = 0.70 pu

Trip Logic

Trip Condition

TR =TD21G, TD21P, TW87

Communications-Assisted Trip

Enable TW32 to accelerate keying of the POTT scheme:

ETW32 = Y

POTT Overcurrent Supervision Threshold

Because there is no in-line series compensation, calculate the POTT overcurrent supervision threshold per *Equation 6.10 on page 6.17*:

$$\begin{aligned} TP67G &= MAX(TP50G, 1.3 \bullet I_{1C_SEC}) \\ &= MAX(0.41\ A, 1.3 \bullet 0.55\ A) \\ &= 0.72\ A \\ TP67P &= MAX(TP50P, 1.3 \bullet \sqrt{3} \bullet I_{1C_SEC}) \\ &= MAX(2.27\ A, 1.3 \bullet \sqrt{3} \bullet 0.55\ A) \\ &= 2.27\ A \end{aligned}$$

Three-Pole Trip

E3PT = RMB7P2	Configure the reclose relay connected on Port 2 via MIRRORED BITS communications to provide the Force Three-Pole Trip signal to drive the E3PT setting. (preferred method)
Or	
E3PT = IN101	Configure the reclose relay to provide the Force Three-Pole Trip signal via IN101 to drive the E3PT setting. (alternative method)

Communications Port Settings

The POTT and DTT schemes are applied via MIRRORED BITS Port 1 by using an IEEE C37.94-compliant multiplexer (DS0 channel).

MIRRORED BITS Port 1

EPORT = Y

EPOTT = Y

EDTT = Y

ENCODING = C37.94

DATACLK = E (Ensure DATACLK = E in the relay at Bus T. When bench-testing this application with the relays connected back-to-back, set DATACLK = I in one of the relays.)

TXID = 1 (Ensure RXID = 1 in the relay at Bus T)

RXID = 2 (Ensure TXID = 2 in the relay at Bus T)

NOTE: On a per port basis, select either SEL MB8 encoding for signaling local SEL relays and SEL I/O devices or IEEE C37.94 encoding for signaling the remote SEL-T400L over compliant multiplexers. Use SEL MB8 encoding and a media converter to interface with multiplexers not compliant with IEEE C37.94. When using SEL MB8 encoding, select the baud rate on a per port basis. When using IEEE C37.94 encoding, the data rate is 1x64 kbps.

Differential Port 6

EPORT = Y

EPOTT = Y (Use the fiber channel as a redundant POTT channel)

EDTT = Y (Use the fiber channel as a redundant DTT channel)

87TADR = 1 (Ensure 87RADR = 1 in the relay at Bus T)

87RADR = 2 (Ensure 87TADR = 2 in the relay at Bus T)

Interfacing With Autoreclose (AR) and Breaker Failure (BF) Devices

Assume this application uses the SEL-T400L in conjunction with either an SEL-421 or SEL-411L Relay. The SEL-421 and SEL-411L Relays can perform both the autoreclose (AR) and the breaker failure (BF) functions. This example requires only one set of trip contacts (TPA1, TPB1, TPC1) on the SEL-T400L and one MIRRORED BITS port for communications-assisted tripping. You can therefore interface the SEL-T400L with the SEL-421/SEL-411L either via one of the two unused MIRRORED BITS ports or via the second set of output contacts (using MIRRORED BITS is the preferred method). This example explains both methods.

Interfacing With the AR and BF Functions Via a MIRRORED BITS Port

NOTE: MIRRORED BITS communications is the preferred method for interfacing the SEL-T400L with an SEL-421 or SEL-411L.

Apply the following settings to the SEL-T400L:

MIRRORED BITS Port 2:

EPORT = Y

EPOTT = N[a]

EDTT = N[a]

ENCODING = MB8

SPEED = 38400 (match this setting to that of the SEL-421/SEL-411L, but use the fastest data rate possible)

TXID = 3

RXID = 4

[a] The signals the SEL-T400L transmits are not impacted by this setting; KEYA, KEYB, and KEYC are still sent.

In this example, EIA-232 Port 1 on the SEL-421/SEL-411L Relay is being used for a communications-assisted protection scheme via MIRRORED BITS protocol Channel A. Therefore, using MIRRORED BITS Channel B, connect MIRRORED BITS Port 2 on the SEL-T400L to EIA-232 Port 2 on the SEL-421/SEL-411L via an SEL-2814 Fiber-Optic Transceiver to access the SEL-421/SEL-411L AR and BF functionality.

Apply the following settings to the SEL-421/SEL-411L:

NOTE: When using MIRRORED BITS communications between the SEL-T400L and SEL-400 series relays, be sure to set the SEL-400 series relay settings to TXMODE = P (because the SEL-T400L operates only in paced mode) and STOPBIT = 2 (because the SEL-T400L supports only the MB8 format).

Port 2:

PROTO = MBB

MBT = N

SPEED = 38400

STOPBIT = 2

MIRRORED BITS Protocol

TXID = 4

RXID = 3

TXMODE = P

MBNUM = 8

Protection Logic 1:

PSV01[a] := RMB4B AND RMB5B AND RMB6B # Three-pole reclose and breaker failure initiate

PSV02[a] := (RMB4B OR RMB5B OR RMB6B) AND NOT PSV01 # Single-pole reclose initiate

Breaker 1 Failure Logic:

BFI3P1[b] := … OR PSV01

BFIA1[b] := … OR RMB4B

BFIB1[b] := … OR RMB5B

BFIC1[b] := … OR RMB6B

Reclosing and Manual Closing:

ESPR1[b] := … OR PSV02

E3PR1[b] := … OR PSV01

Outputs:

MIRRORED BITS Transmit Equations:

Channel B Equations:

TMB7B = E3PT

[a] Any two available Protection SELOGIC variables can be used; PSV01 and PSV02 are shown here for illustrative purposes only.

[b] These settings are in addition to the settings already present in the SEL-421/SEL-411L Relay.

Interfacing With the AR and BF Functions Via the Second Set of Trip Contacts

NOTE: If using MIRRORED BITS communications to interface the SEL-T400L with an SEL-421 or SEL-411L (preferred method) is not possible, you can interface via the second set of trip contacts.

Connect the SEL-T400L to the SEL-421/SEL-411L as shown in *Figure 7.2*.

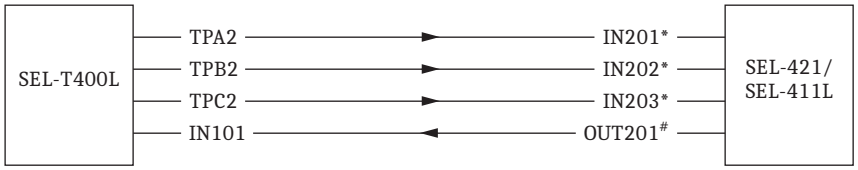

* IN201, IN202, and IN203 are shown for illustrative purposes only; any three spare available input contacts can be used for a single-pole tripping scheme. For a three-pole tripping scheme, only one input contact is required.

\# OUT201 is shown for illustrative purposes only; any available output contact can be used.

Figure 7.2 Wiring Connections Between the SEL-T400L and an SEL-421 or SEL-411L Relay for AR and BF Functionality

Apply the following settings to the SEL-421/SEL-411L:

Protection Logic 1:

PSV01[a] := IN201 AND IN202 AND IN203 # Three-pole reclose and breaker failure initiate

PSV02[a] := (IN201 OR IN202 OR IN203) AND NOT PSV01 # Single-pole reclose initiate

Breaker 1 Failure Logic:

BFI3P1[b] := … OR PSV01

BFIA1[b] := … OR IN201

BFIB1[b] := … OR IN202

BFIC1[b] := … OR IN203

Reclosing and Manual Closing:

ESPR1[b] := … OR PSV02

E3PR1[b] := … OR PSV01

Outputs:

Interface Board Outputs

OUT201 := E3PT

[a] Any two available Protection SELOGIC variables can be used; PSV01 and PSV02 are shown here for illustrative purposes only.

[b] These settings are in addition to the settings already present in the SEL-421/SEL-411L Relay.

Example 2. Two-Terminal Series-Compensated Overhead Transmission Line

Consider the two-terminal series-compensated overhead line shown in *Figure 7.3*.

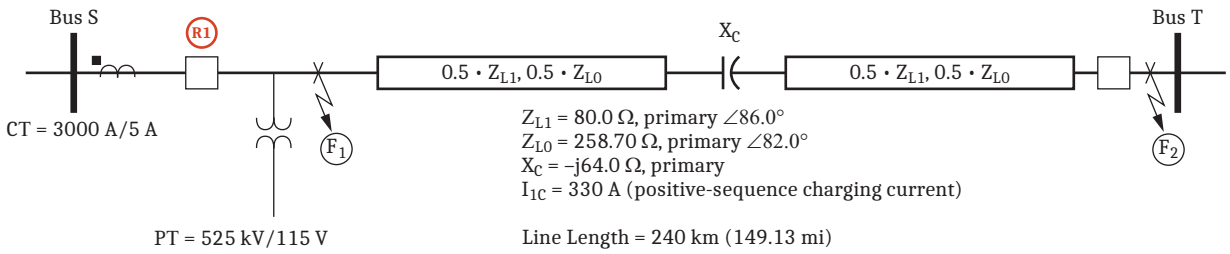

Figure 7.3 Two-Terminal Midline Series-Compensated Overhead Transmission Line

This example assumes the following protection philosophy and requirements:

- Phase and ground underreaching directly tripping element (TD21)
- POTT scheme over a multiplexed DS0 channel (not compliant with IEEE C37.94) and a point-to-point fiber-optic channel
- Traveling-wave differential (TW87) scheme
- DTT scheme over a multiplexed DS0 channel (not compliant with IEEE C37.94) and a point-to-point fiber-optic channel
- Single-pole tripping with an external autoreclose (AR) relay
- An external breaker failure (BF) relay
- Protection against single-line-to-ground faults with a fault resistance of as much as 100 Ω

The example follows the settings order in QuickSet. The following tables include values and descriptions for settings used in Example 2.

Device

Table 7.4 General Setting

Setting Name	Set Value	Unit	Comment
EADVS	Y	N/A	Set to Y in order to access the ETW32 advanced setting.

Table 7.5 Power System, AC Inputs

Setting Name	Set Value	Unit	Comment
NFREQ	60	Hz	Set to match nominal frequency of the power system.
PHROT	ABC	N/A	Set to match phase rotation of the buses connected by the protected line.
LINEI	IW	N/A	Wire the line CT to the IW current inputs of the relay.
CTRW	600	N/A	CT ratio.
PTR	4565.22	N/A	PT ratio.
VNOM	115	V, secondary	Nominal line-to-line secondary voltage of the PT.

Table 7.6 Power System, Line Configuration

Setting Name	Set Value	Unit	Comment
Z1MAG	10.51	Ω, secondary	Positive-sequence line impedance magnitude.
Z1ANG	86.0	deg	Positive-sequence line impedance angle.
Z0MAG	34.00	Ω, secondary	Zero-sequence line impedance magnitude.
Z0ANG	82.0	deg	Zero-sequence line impedance angle.
LL	149.13 or 240.00	N/A	Set the line length in the unit you prefer. For this example, enter 149.13 and set LLUNIT = mi if you prefer miles, or 240.00 and set LLUNIT = km if you prefer kilometers.
TWLPT	816.33	µs	Set the traveling-wave line propagation time. Expect the following value assuming a propagation velocity of 98 percent of the speed of light in free space: 240 km / (0.98 • 300 000 km/s) = 816.33 µs. SEL recommends updating this value based on test results obtained during commissioning (*Measuring Line Propagation Time During Line Energization Test on page 11.50*)
XC	8.41	Ω, secondary	Capacitive reactance magnitude of the in-line series compensation (see *STEP 5. In-Line Series Compensation on page 6.9*).
EXTSC	N	N/A	There is no external series compensation in this example (see *STEP 6. External Series Compensation on page 6.10* for information on how to determine if you have external series compensation for your protection line).

NOTE: XC is calculated as follows:

$$XC = X_C \bullet \frac{CTR}{PTR}$$

$$= 64.0\Omega \bullet \frac{600}{4565.22}$$

$$= 8.41\Omega$$

Protection Elements

Traveling-Wave Differential Element

Following the assumed protection philosophy and requirements, enable the TW87 scheme (ETW87 = Y).

TP50G Setting

In your short-circuit program, configure the power system model so that the source behind the relay (R1) is at its expected weakest value (highest impedance), the source behind Bus T is at its expected strongest value (lowest impedance), and the in-line series capacitor is bypassed (i.e., removed from service).

Apply an AG fault with 100 Ω fault resistance at location F_2 in *Figure 7.3*. Record the phase and ground currents at the relay location for the fault.

Most short-circuit programs calculate fault values assuming zero prefault load:

$$I_{A_PRE} = 0.0 \text{ A}$$
$$I_{B_PRE} = 0.0 \text{ A}$$
$$I_{C_PRE} = 0.0 \text{ A}$$

Fault Currents (AG Fault With R_F = 100 Ω):

$$I_{A_FLT} = 405.0 \text{ A}\angle 0.0°$$
$$I_{B_FLT} = 76.8 \text{ A}\angle 175.8°$$
$$I_{C_FLT} = 76.8 \text{ A}\angle 175.8°$$
$$I_{G_FLT} = 252.1 \text{ A}\angle 2.56°$$

Calculate the magnitude of the incremental replica current for the AG loop ($|\Delta I_{AG}|$). Incremental current is calculated by subtracting the fault current (I_{A_FLT}) from the prefault current (I_{A_PRE}). The incremental replica loop current is then obtained by calculating the incremental current in the faulted loop through use of *Equation 6.5 on page 6.16*:

$$\begin{aligned} |\Delta I_{AG}| &= \left| \Delta I_A + \frac{1}{3} \bullet \Delta I_G \bullet \left(\frac{Z_{L0}}{Z_{L1}} - 1 \right) \right| \\ &= \left| 405.0 \text{ A}\angle 0.0° + \frac{1}{3} \bullet 252.1 \text{ A}\angle 2.56° \bullet \left(\frac{34.0 \ \Omega\angle 82.0°}{10.51 \ \Omega\angle 86.0°} - 1 \right) \right| \\ &= 592.9 \text{ A} \end{aligned}$$

where the incremental currents are:

$$\begin{aligned} \Delta I_A &= I_{A_FLT} - I_{A_PRE} \\ &= 405.0 \text{ A}\angle 0.0° - 0.0 \text{ A} \\ &= 405.0 \text{ A}\angle 0.0° \\ \Delta I_G &= I_{G_FLT} - I_{G_PRE} \\ &= 252.1 \text{ A}\angle 2.56° - 0.0 \text{ A} \\ &= 252.1 \text{ A}\angle 2.56° \end{aligned}$$

Convert the $|\Delta I_{AG}|$ value to secondary amperes:

$$\begin{aligned} \left|\Delta I_{AG_SEC}\right| &= \frac{\left|\Delta I_{AG}\right|}{CTR} \\ &= \frac{592.9\ A}{600} \\ &= 0.988\ A \end{aligned}$$

Calculate the TP50G threshold setting by using a 50 percent margin per *Equation 6.6 on page 6.16*:

$$\begin{aligned} TP50G &= 0.5 \bullet \left|\Delta I_{AG_SEC}\right| \\ &= 0.5 \bullet 0.988\ A \\ &= 0.49\ A \end{aligned}$$

TP50P Setting

With the same system configuration, simulate a zero-resistance line-to-line fault and a three-phase fault at fault location F_2 (shown in *Figure 7.3*). For both fault cases, record the phase fault currents measured by the relay.

Line-to-Line Fault

Fault currents for a zero-resistance line-to-line fault (AB fault) at fault location F_2 are as follows. Assume prefault currents are the same as for the AG fault case (i.e., zero).

Fault Currents (AB Fault):

$$\begin{aligned} I_{A_FLT} &= 1873.8\ A\angle 0.0° \\ I_{B_FLT} &= 1873.8\ A\angle 180.0° \\ I_{C_FLT} &= 0.0\ A \end{aligned}$$

Calculate the incremental replica current for the AB fault loop through use of *Equation 6.7 on page 6.16*:

$$\begin{aligned} \left|\Delta I_{AB1}\right| &= \left|\Delta I_A - \Delta I_B\right| \\ &= \left|1873.8\ A\angle 0.0° - 1873.8\ A\angle 180.0°\right| \\ &= 3747.6\ A \end{aligned}$$

Convert the $|\Delta I_{AB1}|$ value to secondary amperes:

$$\begin{aligned} \left|\Delta I_{AB1_SEC}\right| &= \frac{\left|\Delta I_{AB1}\right|}{CTR} \\ &= \frac{3747.6\ A}{600} \\ &= 6.25\ A \end{aligned}$$

Three-Phase Fault

The phase currents at the relay location for a three-phase fault at location F_2 are calculated as follows.

Fault Currents:

$$I_{A_FLT} = 2163.6\ \text{A}\angle 0.0°$$
$$I_{B_FLT} = 2163.6\ \text{A}\angle -120.0°$$
$$I_{C_FLT} = 2163.6\ \text{A}\angle 120.0°$$

Assume prefault currents are the same as for the AG fault (i.e., zero). Use *Equation 6.8 on page 6.16* to calculate the magnitude of the incremental replica current for all the phase-to-phase fault loops:

$$\begin{aligned} \left|\Delta I_{AB2}\right| &= \left|\Delta I_A - \Delta I_B\right| \\ &= \left|2163.6\ \text{A}\angle 0.0° - 2163.6\ \text{A}\angle -120.0°\right| \\ &= 3747.5\ \text{A} \end{aligned}$$

Convert the $|\Delta I_{AB2}|$ value to secondary amperes:

$$\begin{aligned} \left|\Delta I_{AB2_SEC}\right| &= \frac{\left|\Delta I_{AB2}\right|}{\text{CTR}} \\ &= \frac{3747.5\ \text{A}}{600} \\ &= 6.25\ \text{A} \end{aligned}$$

Then use *Equation 6.9 on page 6.16* to determine the TP50P setting:

$$\begin{aligned} \text{TP50P} &= 0.5 \bullet \text{MIN}(\left|\Delta I_{AB1}\right|, \left|\Delta I_{AB2}\right|) \\ &= 0.5 \bullet \text{MIN}(6.25\ \text{A}, 6.25\ \text{A}) \\ &= 3.13\ \text{A} \end{aligned}$$

Note: In this example, only a small part of an actual transmission system was modeled in the short-circuit program to obtain the short-circuit currents and voltages. The model consisted of only transmission lines and ideal power sources. For a transmission line $Z_{L1} = Z_{L2}$, therefore, a phase-to-phase fault and a three-phase fault produce the same incremental fault currents on this ideally modeled power system. In actual power systems, $Z_1 \neq Z_2$ ($Z_1 \neq Z_2$ in a synchronous generator), and therefore SEL recommends considering both fault types.

Incremental-Quantity Directional Elements

TD32ZF Setting

Configure the short-circuit program so that the source behind Bus S is the strongest. Then apply a three-phase fault at fault location F_1 (shown in *Figure 7.3*) and record the prefault and fault voltages and currents.

Prefault Values:

$$V_{A_PRE} = 303.11\ \text{kV}\angle 0.0° \qquad I_{A_PRE} = 0.0\ \text{A}$$
$$V_{B_PRE} = 303.11\ \text{kV}\angle -120.0° \qquad I_{B_PRE} = 0.0\ \text{A}$$
$$V_{C_PRE} = 303.11\ \text{kV}\angle 120.0° \qquad I_{C_PRE} = 0.0\ \text{A}$$

Fault Values:

$$V_{A_FLT} = 0.0\ \text{kV} \qquad I_{A_FLT} = 16505.0\ \text{A}\angle{-87.0°}$$
$$V_{B_FLT} = 0.0\ \text{kV} \qquad I_{B_FLT} = 16505.0\ \text{A}\angle{153.0°}$$
$$V_{C_FLT} = 0.0\ \text{kV} \qquad I_{C_FLT} = 16505.0\ \text{A}\angle{33.0°}$$

Determine the magnitude of the positive-sequence source impedance:

$$\begin{aligned} |Z_{S1}| &= \left|-\frac{\Delta V_A}{\Delta I_A}\right| \\ &= \left|-\frac{303.11\ \text{kV}\angle{180.0°}}{16505.0\ \text{A}\angle{-87.0°}}\right| \\ &= 18.36\ \Omega \end{aligned}$$

where:

$$\begin{aligned} \Delta V_A &= V_{A_FLT} - V_{A_PRE} \\ &= 0.0\ \text{kV} - 303.11\ \text{kV}\angle{0.0°} \\ &= 303.11\ \text{kV}\angle{180.0°} \\ \Delta I_A &= I_{A_FLT} - I_{A_PRE} \\ &= 16505.0\ \text{A}\angle{-87.0°} - 0.0\ \text{A} \\ &= 16505.0\ \text{A}\angle{-87.0°} \end{aligned}$$

Convert the positive-sequence source impedance magnitude from primary ohms to secondary ohms:

$$\begin{aligned} Z_{S1_SEC}| &= |Z_{S1}| \bullet \frac{CTR}{PTR} \\ &= 18.36\ \Omega \bullet \frac{600}{4565.22} \\ &= 2.41\ \Omega \end{aligned}$$

Use a 70 percent margin per *Equation 6.3 on page 6.12* to calculate the impedance magnitude for the TD32ZF setting:

$$\begin{aligned} TD32ZF &= 0.3 \bullet |Z_{S1_SEC}| \\ &= 0.3 \bullet 2.41\ \Omega \\ &= 0.72\ \Omega \end{aligned}$$

TD32ZR Setting

To determine the impedance value of the reverse impedance threshold (TD32ZR), ignore the impedance of the remote source and consider only the positive-sequence impedance of the transmission line (Z_{L1_SEC}) and the capacitive reactance of the series compensation (XC) in the line. Use *Equation 6.4 on page 6.12* to calculate the impedance magnitude for TD32ZR setting:

$$\begin{aligned} TD32ZR &= 0.3 \bullet |Z_{L1_SEC} + (-jXC)| \\ &= 0.3 \bullet |10.5\ \Omega\angle{86.0°} - 8.41\ \Omega\angle{90.0°}| \\ &= 0.66\ \Omega \end{aligned}$$

NOTE: If TD32ZR calculates to a value of less than 0.1 Ω, include the strongest remote system source impedance in the TD32ZR calculation (see *STEP 8. TD32 Impedance Thresholds on page 6.12*).

Incremental-Quantity Distance Element

Set the phase and ground distance element reach setting according to the best practices of your company. For this example, the phase distance element reach (TD21MP) is set at 75 percent of Z1MAG and the ground distance element

(TD21MG) is set at 70 percent. (Note that the reach setting for the distance elements is set without accounting for the series capacitor; see *Section 6: Settings Guidelines* for more information.)

TD21MP = 0.75 pu

TD21MG = 0.70 pu

Trip Logic

Trip Condition

TR =TD21G, TD21P, TW87

Communications-Assisted Trip

Enable TW32 to accelerate keying of the POTT scheme:

ETW32 = Y

POTT Overcurrent Supervision Threshold

Because the line is series-compensated, set the POTT overcurrent supervision levels to greater than the maximum incremental current caused by switching of the line series capacitor bank. To calculate the maximum incremental current resulting from capacitor switching through use of *Equation 6.11 on page 6.17*, you need the strongest equivalent source impedance for the local source (Z_{S1}) and the remote source (Z_{T1}). By calculating TD32ZF, you have already obtained the strongest equivalent local source impedance (Z_{S1}). Similarly obtain the strongest equivalent remote source impedance (Z_{T1}). For this example, assume Z_{T1} = 3.63 Ω ∠82.0°.

Use *Equation 6.11 on page 6.17* to calculate the TP67G setting:

$$\begin{aligned} TP67G &= \frac{1.25}{\sqrt{3}} \bullet \frac{VNOM}{\left|Z_{S1} + Z_{L1} + Z_{T1}\right|} \\ &= \frac{1.25}{\sqrt{3}} \bullet \frac{115\ V}{\left|2.41\ \Omega\angle 87.0° + 10.51\ \Omega\angle 86.0° + 3.63\ \Omega\angle 82.0°\right|} \\ &= 5.02\ A \end{aligned}$$

Use *Equation 6.12 on page 6.17* to calculate the TP67P setting:

$$\begin{aligned} TP67P &= \sqrt{3} \bullet TP67G \\ &= \sqrt{3} \bullet 5.02\ A \\ &= 8.7\ A \end{aligned}$$

Note: The relay adapts the actual threshold based on the actual voltage drop across the series capacitors (see *Overcurrent Supervision Elements on page 2.22*). For example, if the line was carrying nominal current (i.e., I_{LOAD} = 3000 A primary [5 A secondary]), the effective threshold settings for TP67G and TP67P (TP67G(E) and TP67P(E), respectively) are load-dependent and can be calculated through use of *Equation 6.13 on page 6.18*.

$$\begin{aligned} TP67G(E) &= \sqrt{3} \bullet TP67G \bullet I_{LOAD} \bullet \frac{XC}{VNOM} \\ &= \sqrt{3} \bullet 5.02\ A \bullet 5.00\ A \bullet \frac{8.41\ \Omega}{115\ V} \\ &= 3.18\ A \\ TP67P(E) &= \sqrt{3} \bullet TP67G(E) \\ &= \sqrt{3} \bullet 3.18\ A \\ &= 5.51\ A \end{aligned}$$

Three-Pole Trip

E3PT = RMB7P2 — Configure the reclose relay connected via MIRRORED BITS on Port 2 of the SEL-T400L to provide this signal; see *Three-Pole Trip on page 7.8* of *Example 1. Two-Terminal Overhead Transmission Line* for details.

Communications Port Settings

MIRRORED BITS Port 1 is used for applying a POTT scheme via a DS0 channel with a multiplexer that is not compliant with IEEE C37.94. Use an SEL-2814 Fiber-Optic Transceiver to connect the fiber-optic Port 1 to an electrical input of the multiplexer.

MIRRORED BITS Port 1

NOTE: On a per port basis, select either SEL MB8 encoding for signaling local SEL relays and SEL I/O devices or IEEE C37.94 encoding for signaling the remote SEL-T400L over compliant multiplexers. Use SEL MB8 encoding and a media converter to interface with multiplexers not compliant with IEEE C37.94. When using SEL MB8 encoding, select the baud rate on a per port basis. When using IEEE C37.94 encoding, the data rate is 1x64 kbps.

EPORT = Y

EPOTT = Y

EDTT = Y

ENCODING = MB8

SPEED = 57600 (Ensure SPEED = 57600 in the relay at Bus T)

TXID = 1 (Ensure RXID = 1 in the relay at Bus T)

RXID = 2 (Ensure TXID = 2 in the relay at Bus T)

Differential Port 6

Use the settings in *Differential Port 6 on page 7.8* of *Example 1. Two-Terminal Overhead Transmission Line*.

Interfacing With Autoreclose (AR) and Breaker Failure (BF) Devices

Use the settings in *Interfacing With Autoreclose (AR) and Breaker Failure (BF) Devices on page 7.8* of *Example 1. Two-Terminal Overhead Transmission Line*.

Example 3. CT Selection

In this example, we determine the requirements for CT1. Refer to *Current Transformer Requirements on page 6.29* for general recommendations for selecting current transformers for the SEL-T400L.

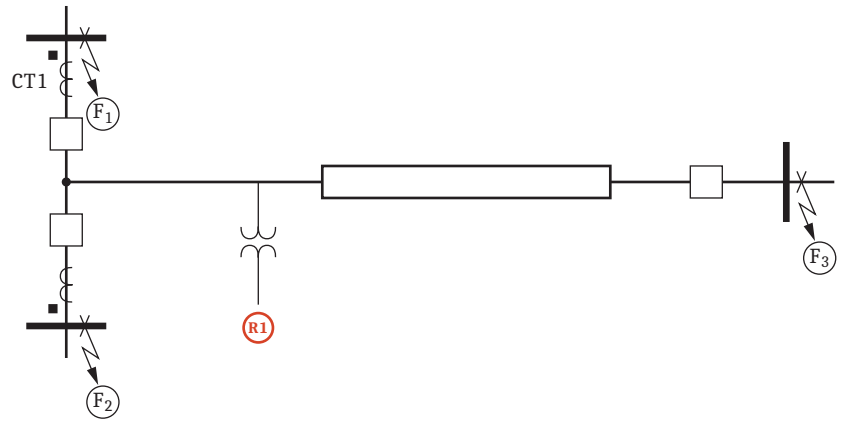

Figure 7.4 Example System for Illustrating CT Selection Rules

This example assumes an emergency load current for the CT1 breaker of 960 A and a nominal CT secondary rating of 5 A for the ANSI calculation and 1 A for the IEC calculation.

Determine the single-line-to-ground (SLG) and three-phase (3P) fault currents measured by CT1 for faults at F_1, F_2, and F_3. Either use your short-circuit software to calculate these values or obtain them from the project file if possible.

Assume the following currents flow through CT1 for the considered fault locations:

$$\text{Fault at } F_1\text{:}\quad IF_{3P} = 5318.0\text{ A} \qquad IF_{SLG} = 3609.0\text{ A}$$

$$\text{Fault at } F_2\text{:}\quad IF_{3P} = 8851.0\text{ A} \qquad IF_{SLG} = 4802.0\text{ A}$$

$$\text{Fault at } F_3\text{:}\quad IF_{3P} = 1903.0\text{ A} \qquad IF_{SLG} = 1309.0\text{ A}$$

According to *Current Transformer Requirements on page 6.29*, select the maximum magnitude from the three fault locations for each fault type.

$$IF_{3P(max)} = 8851.0\text{ A}(\text{for the } F_2 \text{ fault})$$

$$IF_{SLG(max)} = 4802.0\text{ A}(\text{for the } F_2 \text{ fault})$$

ANSI CT Calculation

Because the emergency load current for the CT1 breaker is 960 A, select a CT ratio of 1000:5 (N = 200).

For this application, we assume 1000 feet of 10 AWG wire. This gives a one-way lead resistance of approximately 1.0 Ω.

Calculate the CT saturation (C-class) voltage, assuming $K_{TD} = 6$, through use of *Equation 6.15 on page 6.31*:

NOTE: Remember to factor in the return lead of the CT cable for SLG fault calculations (i.e., multiply R_B by 2).

$$V_{SAT(3P)} = K_{TD} \bullet \frac{IF_{3P(max)}}{N} \bullet R_B = 6 \bullet \frac{8851.0\ A}{200} \bullet 1.0\ \Omega = 265.5\ V$$

$$V_{SAT(SLG)} = K_{TD} \bullet \frac{IF_{SLG(max)}}{N} \bullet 2 \bullet R_B = 6 \bullet \frac{4802.0\ A}{200} \bullet 2 \bullet 1.0\ \Omega = 288.1\ V$$

The voltage rating for CT1 must be greater than the larger of $V_{SAT(3P)}$ and $V_{SAT(SLG)}$:

$$V_{RATED} \geq MAX(V_{SAT(3P)}, V_{SAT(SLG)})$$

$$V_{RATED} \geq 288.1\ V$$

Therefore, select a C400 class for CT1 in this application.

IEC CT Calculation

Because the emergency load current for the CT1 breaker is 960 A, select a CT ratio of 1000:1 (N = 1000).

Assume a CT resistance of 2.5 mΩ per turn and a VA rating of 10 VA.

The CT winding resistance is 1000 turns • 0.0025 Ω/turn = 2.5 Ω.

For this application, we assume 300 m of 4 mm^2 wire. This gives a one-way lead resistance of approximately 2.6 Ω.

Calculate the CT-rated equivalent limiting secondary emf, assuming $K_{TD} = 6$, through use of *Equation 6.16 on page 6.31*:

NOTE: Remember to factor in the return lead of the CT cable for SLG fault calculations (i.e., multiply R_B by 2).

$$E_{AL(3P)} = K_{TD} \bullet \frac{IF_{3P(max)}}{N} \bullet (R_{CT} + R_B)$$

$$= 6 \bullet \frac{8851.0\ A}{1000} \bullet (2.5\ \Omega + 2.6\ \Omega) = 270.8\ V$$

$$E_{AL(SLG)} = K_{TD} \bullet \frac{IF_{SLG(max)}}{N} \bullet (R_{CT} + 2 \bullet R_B)$$

$$= 6 \bullet \frac{4802.0\ A}{1000} \bullet (2.5\ \Omega + 2 \bullet 2.6\ \Omega) = 221.8\ V$$

Using $E_{AL(max)}$ (i.e., the greater of $E_{AL(3P)}$ or $E_{AL(SLG)}$), calculate the rated Accuracy Limit Factor (ALF) through use of *Equation 6.17 on page 6.31*:

$$ALF = \frac{E_{AL(max)}}{\frac{VA}{I_n} + I_n \bullet R_{CT}} = \frac{270.8\ V}{\frac{10.0\ VA}{1.0\ A} + 1.0\ A \bullet 2.5\ \Omega} = 21.7$$

Therefore, select an ALF of 25 for CT1 in this application (e.g., 10P25).

SECTION 8

Engineering and Operator Access Interfaces and Tools

This section provides information related to the engineering and operator access interfaces and tools for configuring the SEL-T400L, viewing and retrieving data from the relay, and performing specific operations such as triggering a record or closing a control output. This section is organized as follows:

- *Introduction on page 8.1* provides a high-level overview of the engineering and operator interfaces and tools.
- *Front-Panel Operations on page 8.4* describes front-panel functionality, including LED indicators and the LCD display.
- *PC Software on page 8.14* provides information about ACSELERATOR QuickSet SEL-5030 Software, which is the primary engineering interface for the SEL-T400L.
- *SEL ASCII Command Language on page 8.33* describes an alternative engineering interface for the SEL-T400L.
- *Access Control and Passwords on page 8.35* describes the access control scheme of the relay for managing access for human operators and machine clients.
- *Settings Structure on page 8.38* describes organization of the relay settings and how to view and edit settings.
- *Communications Setup on page 8.42* provides step-by-step instructions for configuring the SEL-T400L communications ports and your personal computer (PC) for engineering access communications.

Introduction

Perform engineering and operator tasks from the SEL-T400L by using any of the following three methods:

- Front-panel human-machine interface (HMI)
- ACSELERATOR QuickSet SEL-5030 Software
- SEL ASCII command language

The front-panel HMI includes LED indicators for signaling relay information such as relay health, protection targets, status of communications ports, and status of a connected external timing source. The relay includes a **TARGET RESET** pushbutton and provides a lamp test function to verify integrity of the LED indicators. You can print and use your own configurable labels for the LED targets.

The front-panel HMI includes an LCD screen and navigation keys to view relay identification information, status, and basic metering data. You do not need to enter a password to access the information provided on the LCD screen. Use the

NOTE: You cannot view or change settings by using the SEL-T400L front-panel HMI. Use communications ports for engineering access.

front-panel HMI as an information source for operators in the field, and when inspecting a new relay before you establish access over a communications port for engineering or testing tasks. The front-panel HMI requires acknowledgment from the user to enter TW test mode or to play back a test file. The HMI displays selected event playback options and a countdown timer when event playback is pending.

QuickSet is a dedicated Windows-based application for performing common engineering tasks with all SEL relays. These tasks include, but are not limited to, creating a new settings file; downloading or uploading settings files to a relay; managing relay settings files; retrieving relay records; uploading, managing, and playing back test files; and viewing relay status and other data. QuickSet is free of charge and you can obtain it from selinc.com by using your mySEL account.

NOTE: The SEL-T400L ships with Port F enabled and Port 5 disabled. You must first connect over Port F to gain access to settings and to configure Port 5 before you can use Port 5 for access over Ethernet.

You can use QuickSet over a direct cable connection to the front-panel USB Port F or over an Ethernet LAN connected to Port 5 on the rear panel. You must first prepare your PC for operation over Port F, and you must connect to Port F in order to configure access to Port 5 for communication over Ethernet (see *Communications Setup on page 8.42* for step-by-step instructions).

The SEL ASCII command language is a dialog language for human-machine communications, with the human operator (or a machine client) issuing commands to the device (SEL-T400L) and the device responding with a dialog or a report. Use a computer with a USB port and terminal emulator to issue SEL ASCII commands to the SEL-T400L. You can also use a Telnet client to issue SEL ASCII commands to the SEL-T400L over an Ethernet LAN. QuickSet includes both a simple terminal emulator and a Telnet client, but you can use any compliant terminal emulator or Telnet client.

Table 8.1 lists common engineering tasks and provides information on how to accomplish the tasks through use of the front-panel HMI, QuickSet, or ASCII commands.

Table 8.1 Typical Engineering and Operator Tasks and How to Accomplish Them With the SEL-T400L (Sheet 1 of 2)

Task	QuickSet	Front-Panel HMI	ASCII Commands
Identify the relay (serial number, firmware revision, name, etc.)	Tools > HMI > HMI > Status, Edit > Part Number	`Status` menu	VERSION, ID, STATUS
Navigate between access levels (user privileges)	Communications > Parameters	N/A	ACCESS, 2ACCESS, BACCESS, CAL
Change passwords	Device Manager Plug-In Module	N/A	PASSWORD
View an individual setting in the relay	Settings Editor	N/A	SHOW
Archive settings from the relay	Database Manager	N/A	FILE READ
Change an individual setting in the relay	Settings Editor	N/A	SET
Download a settings file to the relay	File > Send	N/A	FILE WRITE
Reset all settings to factory defaults	N/A	N/A	R_S
Inspect relay health status	Tools > HMI > HMI > Status	`Status` menu	STATUS
Inspect relay targets and operating status	Tools > HMI > HMI > Device Overview	LEDs	TARGET
Clear relay targets	Tools > HMI > HMI > Control Window	**TARGET RESET** pushbutton	TARGET R

Table 8.1 Typical Engineering and Operator Tasks and How to Accomplish Them With the SEL-T400L (Sheet 2 of 2)

Task	QuickSet	Front-Panel HMI	ASCII Commands
View relay metering	Tools > HMI > HMI > Instantaneous Metering	`Meter` menu	METER
View relay I/O status	Tools > HMI > HMI > Device Overview	N/A	TARGET
Set relay time and date	Tools > HMI > HMI > Control Window	N/A	TIME, DATE
Inspect status of the IRIG-B time source	Tools > HMI > HMI > IRIG Status	N/A	TIME Q, TARGET
Trigger event record	Tools > HMI > HMI > Control Window	N/A	TRIGGER
Check for new event records	Tools > HMI > HMI > Events > Get Event Files	`Events` menu	HISTORY
Download selected event records	Tools > HMI > HMI > Events > Get Event Files	N/A	FILE READ
Clear selected event records	Tools > HMI > HMI > Control Window	N/A	HISTORY
Check for new SER records	Tools > HMI > HMI > SER	N/A	SER
Download selected SER records	Tools > HMI > HMI > SER	N/A	FILE READ
Clear selected SER records	Tools > HMI > HMI > Control Window	N/A	SER C
View fault record including fault location	N/A (use SEL-5601-2 SYNCHROWAVE Event Software)	`Events` menu	HISTORY
View line monitor counters	N/A	N/A	LIMO
Clear line monitor counters	N/A	N/A	LIMO C
Retrieve line monitor report	N/A	N/A	FILE READ REPORTS LINEMON.TXT (also use FTP)
Inspect status of relay binary points (Relay Word bits)	Tools > HMI > HMI > Targets	N/A	TARGET
View port performance statistics	Tools > HMI > HMI > Communications Ports	N/A	COM P
Initiate a MIRRORED BITS protection port loopback test	N/A	N/A	LOOP
Initiate traveling-wave test mode	Tools > HMI > HMI > Control Window	N/A	TWTEST
Perform event playback test	Tools > Event Playback > Playback dashboard	N/A	PLAY
Clear port performance statistics	N/A	N/A	COM P C
Upgrade relay firmware	Tools > Firmware Loader (see *Appendix B: Firmware Upgrade Instructions*)	N/A	L_D
Force contact outputs	Tools > HMI > HMI > Control Window	N/A	PULSE
Downgrade relay firmware	Contact SEL		

SEL issues firmware upgrades from time to time. Upgrading the firmware in the SEL-T400L is an infrequent but critical task. See *Appendix B: Firmware Upgrade Instructions* for step-by-step instructions for firmware upgrade. The SEL-T400L only allows you to upgrade firmware via the front-panel USB Port F.

Front-Panel Operations

Front-Panel Layout

Figure 8.1 shows the layout of the SEL-T400L front panel. The front-panel LCD and LED targets provide an overview of the operating status of the SEL-T400L and the protected line.

The LCD and associated navigation pushbuttons form the HMI, which allows direct access to metering, events, and relay identification and status information. Multicolor LEDs provide visual indication of relay status, protection element and scheme targets, and fault-type identification.

The SEL-T400L front panel includes a **TARGET RESET** pushbutton. The front-panel USB 2.0 port allows you to communicate with the relay for engineering access. The SEL-T400L front panel includes two transparent pockets for slide-in configurable labels. Use these labels to rename the LEDs or to show diagrams or other useful information (see *Figure 8.11* for more information).

Figure 8.1 SEL-T400L Front Panel

Front-Panel Communications Port F

The SEL-T400L front panel includes a USB 2.0 Type B serial port (**PORT F**). Use Port F for temporary engineering access to the relay, such as for commissioning and testing in the field. The SEL-T400L ships with Port F enabled and all other ports disabled. Therefore, you must connect to Port F first in order to configure other ports before you can use them. You can upgrade relay firmware only through Port F. Refer to *Communications Setup on page 8.42* for step-by-step instructions on how to configure the SEL-T400L ports and your PC to communicate with one another.

Front-Panel HMI

The alphanumeric LCD and six navigation pushbuttons provide a simple HMI for the SEL-T400L. Use the HMI to perform the following tasks:

- View metering
- View event summaries
- View relay status and diagnostics information
- View fault location information

- Acknowledge traveling-wave test mode command issued over a communications port for security
- Acknowledge event playback test initiation for security
- View countdown timer and options for a pending event playback
- View relay identification such as part and serial numbers, the firmware identification number, etc.

NOTE: The SEL-T400L does not allow settings changes from the front-panel HMI. To make settings changes, use the front-panel USB Port F or the rear-panel Ethernet Port 5.

The LCD displays two lines, each containing 16 characters. You can scroll to the right to view messages longer than 16 characters. Six navigation pushbuttons below the LCD window control the LCD menus and information screens.

Basic HMI Operation

Use the six-button keypad to navigate the HMI menu. *Table 8.2* describes the function of each pushbutton.

Table 8.2 Navigation Pushbutton Functions

Pushbutton	Function
Up Arrow	Move up within a menu or data list.
Down Arrow	Move down within a menu or data list.
Left Arrow	Move the cursor to the left.
Right Arrow	Move the cursor to the right.
ESC ESC	Escape from the current menu or display. Hold for 2 seconds to display contrast adjustment screen.
ENT ENT	Select the menu item at the cursor.

You can adjust the LCD screen contrast to suit your viewing angle and lighting conditions. To change the screen contrast, press and hold the **ESC** pushbutton for two seconds. The relay displays a contrast adjustment box similar to that shown in *Figure 8.2*.

Press the **Right Arrow** or **Left Arrow** pushbutton to increase or decrease the contrast, respectively. When finished, press the **ENT** pushbutton to save the selected contrast. Press **ESC** once at any time to discard the changes and exit the adjustment function.

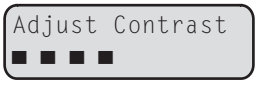

Figure 8.2 LCD Contrast Adjustment

Default Messages

If the navigation buttons are unused for 15 minutes, the backlight turns off and the LCD shows either the default metering, fault location, line monitoring trigger or alarm message for 15 seconds, or internal diagnostic information. *Figure 8.3* shows the default metering screen, displaying positive-sequence voltage scaled to the line-to-line base in primary kV and line currents in primary amperes. These values are updated every 2 seconds.

```
V=500.1  IA=1020
IB=1014  IC=1017
```

Figure 8.3 Default Display (Primary kV and A)

If a trip occurs and the relay is able to determine the fault location, the relay interrupts any present display with a fault location message similar to that shown in *Figure 8.4* (see *Events Menu on page 8.8* for more information).

```
Fault Location
DE TW  94.825 mi
```

Figure 8.4 Fault Location Message

The LCD displays the fault location message until one of the following occurs:

- The **TARGET RESET**, **ENT**, or **ESC** pushbutton is pressed.
- Navigation buttons are unused for 15 minutes.
- Another fault occurs within 15 minutes of the previous fault. (If this happens, the relay updates the present message with the newer fault location message.)
- A self-test warning or alarm occurs and the relay displays a diagnostic message.

Menu Navigation

The SEL-T400L HMI organizes access to metering, events, and relay status in a menu-driven system. Use the LCD and the six pushbuttons below the LCD to navigate these menus. *Figure 8.5* shows the menu structure of the relay.

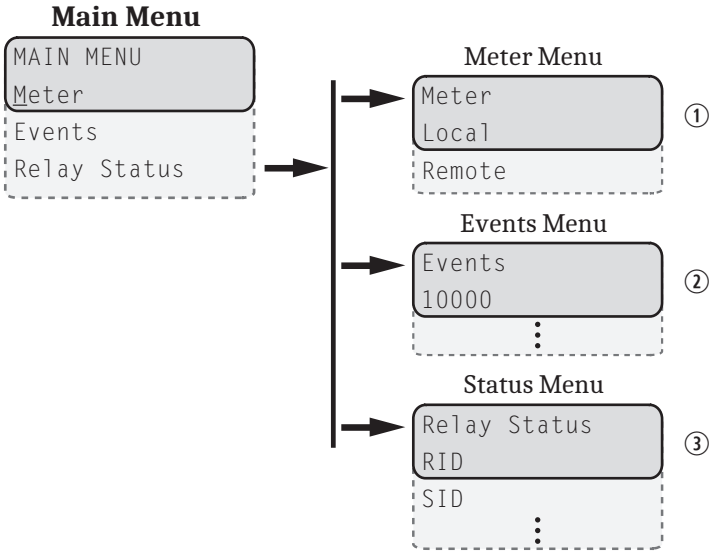

① See *Table 8.3* for more information.
② See *Table 8.4* for more information.
③ See *Table 8.5* for more information.

Figure 8.5 Menu Navigation Structure

Press the **Up Arrow** or **Down Arrow** pushbutton to scroll the cursor to the previous or next menu selection, respectively. The selected menu is indicated by underlining of its first character. Pressing the **ESC** pushbutton returns the LCD display to the

previous screen. Pressing **ESC** repeatedly returns you to the `MAIN MENU`. If a status warning, alarm condition, or event condition is active (i.e., neither acknowledged nor reset), the relay displays the status warning, alarm screen, or trip event screen in place of the `MAIN MENU`.

Figure 8.6 shows an example selection of the `Meter` item in the `MAIN MENU`. Select an item by moving the cursor to a menu item and then pressing the **ENT** pushbutton.

```
MAIN MENU
Meter
Events
Relay Status
```

Figure 8.6 Meter Item Highlighted in the MAIN MENU

Meter Menu

The Meter menu provides local and remote metering data. After selecting `Local` or `Remote`, use the **Up Arrow** and **Down Arrow** pushbuttons to scroll through the metering data. *Figure 8.7* shows an example of the metering data.

```
VAB (kV)   Local
508.32     31.2°
```

Figure 8.7 Metering Data Example Screen

Table 8.3 shows all the local and remote metering values available from the HMI. Note that the remote metering values include only the line currents and not the individual W- or X-terminal currents. Remote metering values are not available if Port 6 is not enabled.

Table 8.3 Available LCD Metering Values (Sheet 1 of 2)

Name	Description
VAB	A-phase-to-B-phase primary line voltage magnitude (kV) and angle (°)
VBC	B-phase-to-C-phase primary line voltage magnitude (kV) and angle (°)
VCA	C-phase-to-A-phase primary line voltage magnitude (kV) and angle (°)
VA	A-phase-to-neutral primary phase voltage magnitude (kV) and angle (°)
VB	B-phase-to-neutral primary phase voltage magnitude (kV) and angle (°)
VC	C-phase-to-neutral primary phase voltage magnitude (kV) and angle (°)
IA	A-phase primary line current magnitude (A) and angle (°)
IB	B-phase primary line current magnitude (A) and angle (°)
IC	C-phase primary line current magnitude (A) and angle (°)
FREQ[a]	System frequency (Hz)
V1	Positive-sequence primary voltage magnitude (kV) and angle (°)
3V2	Negative-sequence primary voltage magnitude (kV) and angle (°)
3V0	Zero-sequence primary voltage magnitude (kV) and angle (°)
I1	Positive-sequence primary line current magnitude (A) and angle (°)
3I2	Negative-sequence primary line current magnitude (A) and angle (°)
3I0	Zero-sequence primary line current magnitude (A) and angle (°)
IAW[a]	Terminal W primary A-phase current magnitude (A) and angle (°)

Table 8.3 Available LCD Metering Values (Sheet 2 of 2)

Name	Description
IBW[a]	Terminal W primary B-phase current magnitude (A) and angle (°)
ICW[a]	Terminal W primary C-phase current magnitude (A) and angle (°)
IAX[a]	Terminal X primary A-phase current magnitude (A) and angle (°)
IBX[a]	Terminal X primary B-phase current magnitude (A) and angle (°)
ICX[a]	Terminal X primary C-phase current magnitude (A) and angle (°)

[a] Local data only.

Events Menu

The Events menu shows information similar to the event report history (see *Section 5: Fault and Event Recording* for more information). The HMI displays the events from newest to oldest. If there is more than one event stored, press the **Down Arrow** pushbutton to access the older events. Press **ESC** to exit the Events menu.

Figure 8.8 shows the first Events menu screen (in this example, the latest event was Event 10021), and *Table 8.4* shows the remaining available event data. To see the data shown in *Table 8.4*, select an event report and then press the **ENT** button. Use the **Up Arrow** and **Down Arrow** pushbuttons to navigate the event data.

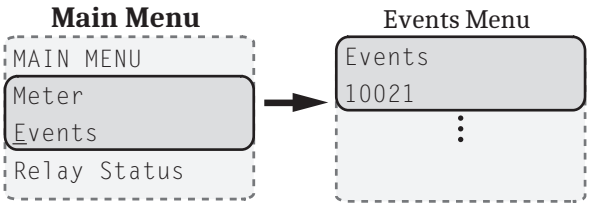

Figure 8.8 First Screen of the Events Menu

If there are no entries in the event buffer, the relay displays the following message: `No Fault Data`.

Table 8.4 Available Event Data (Sheet 1 of 2)

Display	Description
`Event Number [12345]`	A unique number for each event (between 10000 and 65535).
`Date/Time yyyy/mm/dd hh:mm:ss.sss`	The date and the time of the event.
`Event [Type]`	Event type, see *Table 6.5* for more information.
`Fault Location [Method] [123.456] [units]`	Fault-locating method and fault location in LLUNITs. If no valid fault location is available, the LCD displays `$$$$$$$`. Inspect the IEEE COMTRADE header file for all fault-locating results.
`Current 12345 A`	Maximum of the local line currents (IA, IB, or IC) in primary amperes at time of the trip. If the value exceeds 99999 A, the LCD displays `$$$$$`.

Table 8.4 Available Event Data (Sheet 2 of 2)

Display	Description
Frequency 60.001 Hz	System frequency.
Targets [Targets]	Protection elements tripping targets. If Relay Word bit TRIP asserts during an event, the LCD displays as many as five of the following applicable tripping targets: TD21, TD32, TW32, TW87, COMM, or LOP. If TRIP did not assert during the event, the LCD displays no targets.

Status Menu

The Status menu provides relay identification and diagnostics information. The diagnostics messages include both warnings (W) and failures (F). *Figure 8.9* shows how to access this information.

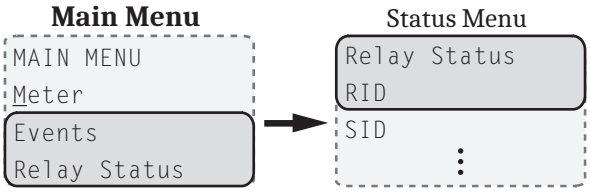

Figure 8.9 Relay Status

The Status menu consists of a subset of the relay **STA** command response (see *Appendix F: Diagnostics* for information on steps to take if the relay displays a warning or failure). *Table 8.5* shows the status information available on the LCD.

Table 8.5 Available LCD Status Data (Sheet 1 of 2)

Display[a]	Description
RID [Value]	Relay Identifier (Setting)
SID [Value]	Station Identifier (Setting)
FID [Value]	Firmware Identification String
Serial Number [Value]	Relay serial number
IAW DC Offset [Value] mV [S]	IAW DC offset value (Warning or Failure)
IBW DC Offset [Value] mV [S]	IBW DC offset value (Warning or Failure)
ICW DC Offset [Value] mV [S]	ICW DC offset value (Warning or Failure)
IAX DC Offset [Value] mV [S]	IAX DC offset value (Warning or Failure)
IBX DC Offset [Value] mV [S]	IBX DC offset value (Warning or Failure)
ICX DC Offset [Value] mV [S]	ICX DC offset value (Warning or Failure)
VA DC Offset [Value] mV [S]	VA DC offset value (Warning or Failure)

Table 8.5 Available LCD Status Data (Sheet 2 of 2)

Display[a]	Description
VB DC Offset [Value] mV [S]	VB DC offset value (Warning or Failure)
VC DC Offset [Value] mV [S]	VC DC offset value (Warning or Failure)
MB Power Supply [Status]	Main board power supply (Warning or Failure)
AI Power Supply [Status]	Analog input board power supply (Warning or Failure)
Temperature [Value]° C [S]	Main board temperature (Warning or Failure)
Real time clock [Status]	Real-time clock (Warning or Failure)
HMI [Status]	Human-machine interface (Warning or Failure)
RAM [Status]	Random-access memory (Warning or Failure)
ROM [Status]	Read-only memory (Warning or Failure)
AI_BRD [Status]	Analog input board (Warning or Failure)
FLASH [Status]	Flash memory (Warning or Failure)
FPGA [Status]	Field-programmable gate array (Warning or Failure)
EEPROM [Status]	Electrically erasable read-only memory (Warning or Failure)
USB [Status]	Universal serial bus (Warning or Failure)
SFP5 [Status]	Small form-factor pluggable transceiver (Warning or Failure)
SFP6 [Status]	Small form-factor pluggable transceiver (Warning or Failure)
No Failures or Warnings	Message displayed when no failures or warnings are detected

[a] Where:
[S] is either "W" (warning) or "F" (Fail); blank under healthy conditions.
[Status] is either "WARN" or "FAIL"; blank under healthy conditions.

The warnings and failures shown in *Table 8.5* appear on the LCD only when the relay detects a particular warning or failure. When no warnings or failures are present, the LCD displays: `No Failures or Warnings`.

Status and Target LEDs

The SEL-T400L front panel provides an at-a-glance overview of relay operating conditions via multicolor factory-programmed status and target LEDs.

Figure 8.10 shows the arrangement of the status and target LEDs. *Table 8.6* describes functionality for each LED. The relay latches the TRIP and fault-identification targets upon a protection trip and stores their state in nonvolatile memory.

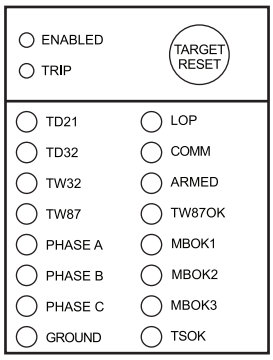

Figure 8.10 Front-Panel Status and Target LED Layout

Table 8.6 Front-Panel Status and Target LEDs

Label	Function
ENABLED, TRIP, ARMED	Key operational indications
TD21, TD32, TW32, TW87, COMM	Protection elements and schemes targets
PHASE A, PHASE B, PHASE C, GROUND	Fault-type identification targets
LOP	Loss-of-potential indication
TW87OK	Port 6 communications status
MBOK1, MBOK2, MBOK3	Ports 1, 2, and 3 MIRRORED BITS communications status
TSOK	Relay time synchronization status

Key Operational Indications

The green ENABLED LED is illuminated if the relay is functioning normally. The ENABLED LED turns off to indicate that the self-test logic has taken the relay out of service because of a major self-test error. See *Appendix F: Diagnostics* for more information on relay self-tests.

The red TRIP LED indicates that the relay tripped for a fault either from its selective protection elements or schemes, or from an input programmed in the TR setting. When the TRIP LED is illuminated, the relay has closed the trip output contacts and has sent the direct trip signals on all enabled protection ports. The TRIP LED target latches and remains latched until you clear it.

The ARMED tricolor LED indicates the status of the relay protection elements and schemes.

Expect the ARMED LED to be illuminated green under normal conditions. Ensure that the ARMED LED illuminates green after you energize and load the protected line following relay commissioning or maintenance testing.

The ARMED LED illuminates red if one or more of the protection elements and schemes are enabled and configured to trip, but none of them are operational.

The ARMED LED illuminates yellow if one or more of the protection elements and schemes are enabled and configured to trip, but there are issues or operating conditions present that may degrade their dependability or protection functionality. See *ARMED LED Target Logic on page 2.60* for more information.

When the TW test mode is enabled, the ARMED LED pulses. The test mode has a 30-minute time-out limit. Cancel the test mode via the **TWTEST C** or **TWTEST X** command before returning the relay to service.

Protection Element and Scheme Targets

The **TD21**, **TD32**, **TW32**, **TW87**, and **COMM** green LEDs indicate the corresponding protection elements and schemes that operated for the most recent trip event. The **COMM** LED illuminates upon receiving either permissive or direct trip signals. These five target LEDs illuminate for 1 second upon operation of the corresponding elements and schemes, and they reset if no trip is issued or if their operation did not lead to a trip. If an element or a scheme led to a trip, its corresponding target LED latches. The TD21 and TW87 targets latch only if these elements have been configured to trip in the TR setting. The TD32 target latches only when the POTT scheme operated for a trip event. The TW32 target latches only if the TW32 element is enabled to key permissive POTT signals and the POTT scheme operated for an event.

Once latched, these LEDs remain latched until you clear them. If the targets are not cleared before the next trip event, they will be overwritten and the new targets will show the most recent trip event.

Fault-Type Identification Targets

The **PHASE A**, **PHASE B**, **PHASE C**, and **GROUND** LED targets illuminate red according to the SEL-T400L fault-type identification logic and the per-phase assertion of the TD21, POTT, DTT, and TW87 protection elements and schemes if these schemes and elements are configured for tripping. This logic accurately classifies whether Phase A, B, C, or ground was involved in the most recent trip event.

The **PHASE A** LED illuminates for faults on the power system A-phase. Single-phase-to-ground faults involving the A-phase illuminate both the **PHASE A** and **GROUND** LEDs. A phase-to-phase fault between A-phase and B-phase illuminates the **PHASE A** and **PHASE B** LEDs. Faults involving other phase combinations are indicated similarly. If the phase-to-phase fault includes ground, the **GROUND** LED also illuminates. For a three-phase fault, the **PHASE A**, **PHASE B**, **PHASE C**, and **GROUND** LEDs all illuminate.

The fault-identification target LEDs latch upon the trip event and remain latched until you clear them. If the targets are not cleared before the next trip event, they will be overwritten and the new targets will show the most recent trip event.

Loss-of-Potential Indication

The red **LOP** LED illuminates when the relay detects a loss-of-potential condition (Relay Word bit LOP is asserted). See *Loss-of-Potential Logic on page 2.42* for complete details. The LOP target self-resets (i.e., the LOP target does not latch, but turns off when the LOP condition is no longer present). The LOP logic stores the LOP bit in nonvolatile memory. Therefore, if the relay restarts with the LOP condition present, the **LOP** LED illuminates upon restart and remains illuminated until the LOP logic resets (upon measuring normal voltages).

Port 6 Communications Status

The TW87OK bicolor LED indicates the status of the direct point-to-point fiber-optic protection channel over Port 6. The TW87OK LED is off when Port 6 is disabled. When Port 6 is enabled (EPORT = Y), the TW87OK LED illuminates as follows:

- Green if Port 6 is receiving data normally and the local and remote relay clocks are synchronized and locked.
- Red if Port 6 is not receiving data or the remote and local clocks are not synchronized.

Use communications port diagnostics to troubleshoot problems with Port 6 communications and time synchronization (see *Section 3: Protection Communications Channels*).

MIRRORED BITS Communications Status

The MBOK1, MBOK2, and MBOK3 bicolor LEDs indicate the status of the MIRRORED BITS communications channels over Ports 1, 2, and 3, respectively. The LED is off when the corresponding port is disabled (EPORT = N). The LED illuminates green if the corresponding port is enabled and operating normally, and it illuminates red if the corresponding port is enabled but *not* operating correctly. Use communications port diagnostics to troubleshoot problems with MIRRORED BITS ports (see *Section 3: Protection Communications Channels*).

Relay Time Synchronization Status

The green TSOK LED indicates the status of relay time synchronization with respect to absolute time provided by an external time source. Such time sources can include a satellite clock or a network-based clock (e.g., an SEL-8000 ICON multiplexer).

The TSOK LED is off if the relay is not synchronized to absolute time. The lack of internal relay clock synchronization to the absolute time does not compromise the SEL-T400L protection (including the TW87 scheme). The SEL-T400L time-stamps all of its records with the internal relay time if the relay is not synchronized to an absolute time source.

The TSOK LED illuminates green if the internal relay clock is locked to an accurate external time source connected to the IRIG-B signal. When the Port 6 channel is available, the relay synchronizes to the remote time source if the local time source is either not connected or unavailable.

The SEL-T400L time-stamps all records with absolute time when the TSOK LED is illuminated. Expect timing accuracy better than one microsecond.

Target Reset

For a trip event, the relay latches the trip-related LEDs (protection element and scheme targets and fault-identification targets). Press the TARGET RESET pushbutton to reset the latched target LEDs. When a new trip event occurs and you have not reset the previously latched trip targets, the relay clears the latched targets and displays the new trip targets.

Pressing the TARGET RESET pushbutton illuminates all the LEDs. Upon releasing the TARGET RESET pushbutton, two possible trip situations can exist: the trip outputs are still asserted, or the trip outputs are unlatched.

If the trip outputs are unlatched, the latched target LEDs turn off. If the trip outputs are still asserted, the relay reilluminates the latched target LEDs.

You can reset the target LEDs by issuing the **TAR R** command (see *TARGET on page C.17* for more information). The **TAR R** command and the TARGET RESET pushbutton also control the TRGTR Relay Word bit.

You can reset the targets by clicking the TARGET RESET button in the QuickSet Control Window branch of the HMI tree view (see *PC Software on page 8.14* for more information).

Lamp Test

The TARGET RESET pushbutton also provides a front-panel lamp test. Press and hold TARGET RESET to illuminate all front-panel LEDs (except the ENABLED LED). They remain illuminated until you release the TARGET RESET pushbutton, at which point the LEDs return to their operational state.

The SEL-T400L target LEDs are multicolor. The lamp test cycles through the green, yellow, and red colors in 4-second intervals for all LEDs simultaneously (except the ENABLED and TRIP LEDs), regardless of how many colors any specific LED actually uses.

Configurable Labels

The SEL-T400L comes with pre-printed labels for the front panel (Area 1 and Area 2 shown in *Figure 8.11*). *Figure 8.11* also shows the two openings that allow you access to the labels. If you prefer different labels, you can insert your own labels. You can print your own custom labels or download more labels from the literature section at selinc.com/products/T400L/.

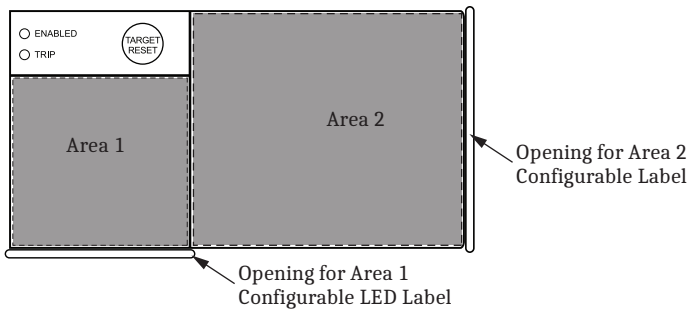

Figure 8.11 Openings for Front-Panel Configurable Labels

PC Software

QuickSet is a tool for engineers and technicians to quickly and easily configure, deploy, and manage SEL devices for power system protection, metering, and monitoring. Through use of this software, you can perform the following:

- Create and manage settings files
- Communicate with the relay via the built-in terminal emulator
- Upload configured settings to the SEL-T400L
- Upgrade the firmware of the SEL-T400L with the Firmware Loader
- Download event reports from the SEL-T400L for post-event analysis

- Organize devices through use of the QuickSet Device Manager
- View operational information with the built-in virtual HMI
- Perform playback tests to verify protection and fault locating functionality

QuickSet is a free PC software program that supports the SEL-T400L. When indicated, some advanced functionality of the software requires a license. See the *ACSELERATOR QuickSet SEL-5030 Software Instruction Manual* that can be found at selinc.com for information on PC requirements, installation, licensing, and additional information regarding configuring the software. Click **Help > Contents** to view the *QuickSet Instruction Manual*.

Obtaining and Installing QuickSet

QuickSet can be obtained from the software download area of the SEL website. To be alerted of new relay drivers, download and install SEL Compass Software, then use Compass to download and install QuickSet. When you download QuickSet within Compass, you will be asked to select which relay drivers you want to install. Select drivers for all SEL relays that you plan on setting and managing. If later you find that additional drivers are required, Compass provides an easy method to request new drivers and updates (see *Updating QuickSet on page 8.33*). QuickSet is also available on CD upon request.

To install QuickSet, perform the following steps:

Step 1. Obtain the QuickSet installation files from the website (selinc.com/products/5030/).

Step 2. Run the installation file as administrator.

Step 3. On the **License Agreement** page, you can select the **Show advanced options during installations** check box to run through individual application installation wizards. Alternatively, leave this unselected to have the system perform a silent installation and use default installation settings. The following describes a silent installation and uses default installation settings.

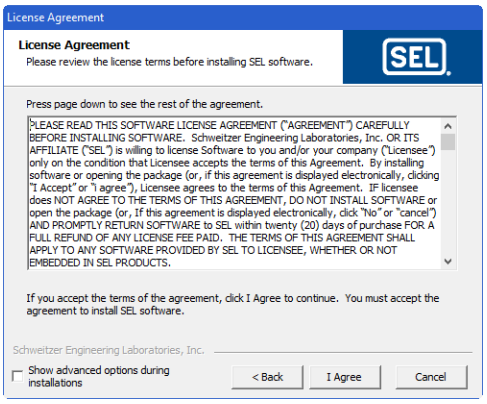

Figure 8.12 License Agreement

Step 4. If you agree to the terms of the license agreement, click **I Agree** to begin the installation of SEL Compass and QuickSet.

Step 5. Once you have completed installation of SEL Compass and QuickSet, the installer displays the driver selection screen, as shown in *Figure 8.13*. Select the drivers for the device models with which you plan to work. If you want to install only certain drivers, right-click in the window, choose **Deselect All**, and then individually select the drivers you want to install. When finished, click **OK** to continue with the installation. By default, SEL Compass selects all drivers for installation, as shown in *Figure 8.13*.

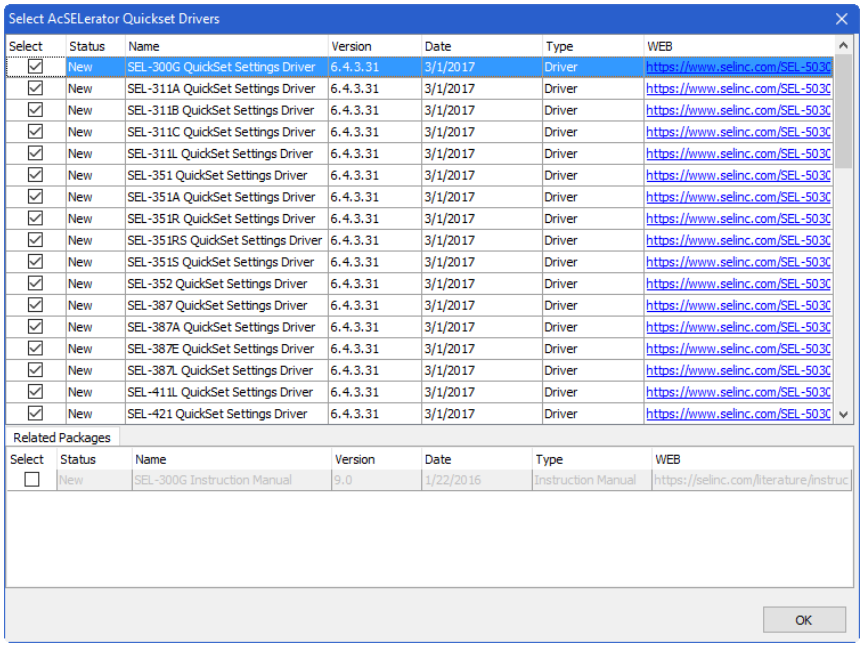

Figure 8.13 Select the Device Drivers You Want to Install With QuickSet

Step 6. After the device drivers have completed downloading, the installer displays a screen from which you can select QuickSet plugins. You do not need to install any plugins to communicate with or to set the SEL-T400L, but if you plan to use Device Manager, select **QuickSet DeviceManager Plugin**, as shown in *Figure 8.14*. When you are finished choosing the plugins that you want to install, click **OK** to continue with the installation.

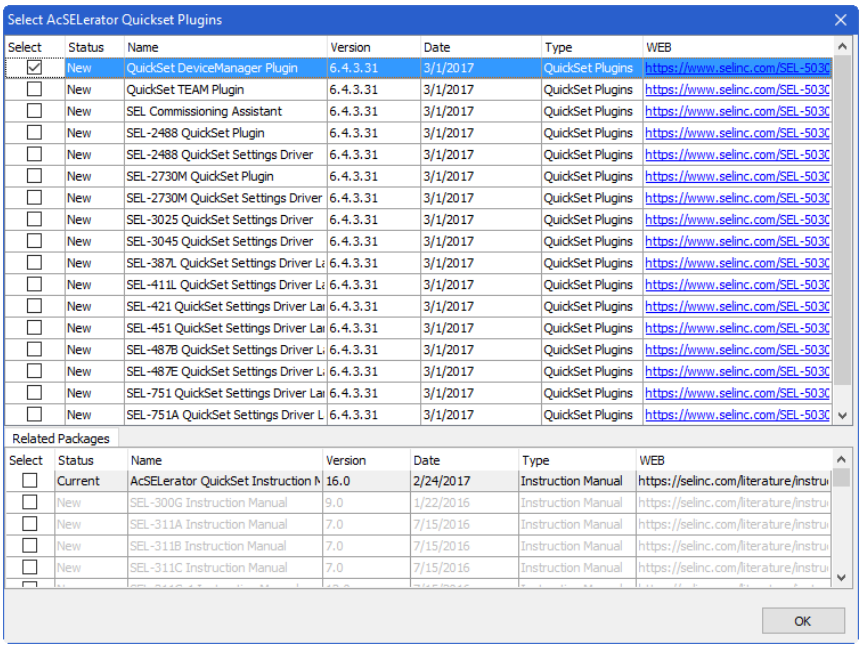

Figure 8.14 Available Plugins for Installation With QuickSet

Step 7. When a prompt declaring successful installation appears, click **Close** to finish the installation.

QuickSet Interface

When you launch QuickSet, the initial window (shown in *Figure 8.15*) appears. This consists of a welcome screen and a menu. The welcome screen consists of the Settings and Setup categories.

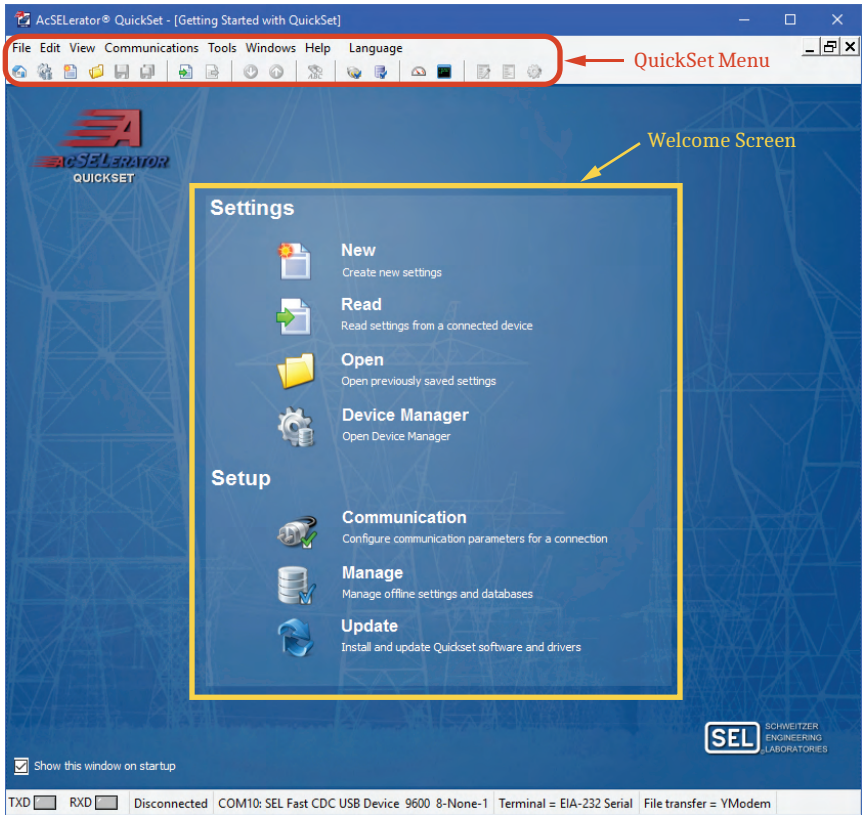

Figure 8.15 Initial QuickSet Window

The welcome screen provides the following options.

Settings

New	Create new settings.
Read	Read settings from a connected device and display the settings in the QuickSet window.
Open	Open settings stored in a Relay Database file.
Device Manager	Open Device Manager (asset management tool for SEL devices). See the *QuickSet Instruction Manual* for more information (click **Help > Contents** to view this manual).

Setup

Communication	Configure serial (including USB) and network connections.
Manage	Manage offline settings and databases.
Update	Install and update QuickSet software and drivers.

QuickSet Menu

The menu provides File, Edit, Communications, Tools, Windows, Help, and Language options. All of the functions included in the welcome screen are also present in the menu. The menu provides the following options.

File

New	Create new settings.
Open	Open settings stored in a Relay Database file.
Close	Close settings instance that is open in the QuickSet window.
Save/Save As	Save settings instance that is open in the QuickSet window to the active Relay Database file.
Print Device Settings	Print settings reports.
Read	Read settings from a connected device and display the settings in the QuickSet window.
Send	Send settings instance that is open in the QuickSet window to a connected device.
Database Manager	Open Database Manager to create a new Relay Database file, copy settings within the active Relay Database file, add descriptions to settings within the database, and copy and move settings between different databases.
Exit	Quit QuickSet.

Edit

Copy	Copy settings.
Search	Search for a text string within the settings instance.
Compare	Compare the presently selected settings instance that is open in the QuickSet window to another settings instance in the Relay Database file.
Merge	Merge the settings instance that is open in the QuickSet window with another settings instance in the Relay Database file.
Part Number	Change the current device part number for the settings instance that is open in the QuickSet window.

Communications

Connect	Connect to a device through use of the current Connection Parameters.
Parameters	Modify the communications parameters, including connection type (serial [including USB], network, or modem); PC port numbers, speed, and settings; device passwords, IP addresses, ports, and file transfer options; and modem phone numbers and speeds.
Network Address Book	Select from a list of Ethernet-connected devices. Add or modify devices by specifying the connection name, IP address, Telnet port number, user ID, and password.
Terminal	Open a terminal window to issue ASCII commands directly to a connected relay.
Logging	Initiate terminal logging to record terminal communications. View and clear the connection log.

Tools

Settings	Convert settings between settings versions. Import and export settings to and from text files.
HMI	Open HMI for the connected device and manage custom HMI Device Overviews.
Events	Collect event and view reports from connected devices.
Event Playback	Convert COMTRADE files to playback test files, upload the test files to the relay, and play them back.
Options	Control QuickSet options, including settings comments, event viewer, and terminal options.
Firmware Loader	Upgrade relay firmware.
Device Manager	Open Device Manager (asset management tool for SEL devices). See the *QuickSet Instruction Manual* for more information (click **Help > Contents** to view this manual).
Help	Access program and settings help.

For more detailed descriptions of the submenu functions, refer to the *QuickSet Instruction Manual*.

Working With Settings Files

QuickSet provides the ability to create settings for SEL relays without the need for a connection to a physical relay. After creating the settings files, you can upload them from the settings library to a relay. QuickSet uses a database to store and manage SEL device settings.

File > New

To begin creating SEL-T400L settings, click **File > New** from the menu to cause QuickSet to display the **Settings Editor Selection** window (as shown in *Figure 8.16*). The **Device Family** column indicates the relay family, the **Device Model** column shows the specific device type, and the **Version** column specifies the settings version the program will create. Select SEL-T400L from the **Device Family** menu, the appropriate model (SEL-T400L) from the **Device Model** menu, and the settings version number (SVN; 001 in this example) from the **Version** menu. Click **OK**.

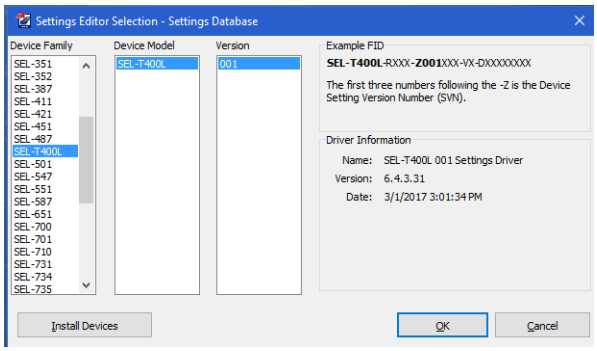

Figure 8.16 Settings Editor Selection

If you create settings offline, the SVN of the device may be unknown at the time you create the settings. If this settings version number is unknown, select the largest SVN in the **Version** box in the QuickSet **Settings Editor Selection** dialog

box. Once you know the correct SVN, you can convert the settings to the correct version by using the SVN convert utility in QuickSet. (See *Tools > Settings > Convert on page 8.27* for more information.)

If you can communicate with the relay, one way of obtaining the driver version is to issue the **ID** command (see *Appendix C: SEL ASCII Commands* for more information) from Access Level 1, and then to view the Firmware Identification (FID) string. From the response of the **ID** command, locate and record the Z-number in the FID string (as shown in *Figure 8.17*).

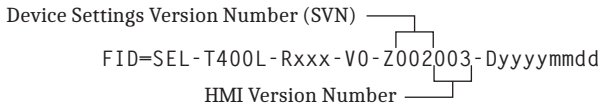

Figure 8.17 QuickSet Driver Information in the FID String

The first portion of the Z-number (Z002xxx in *Figure 8.17*) denotes the QuickSet device settings version number you use when creating or editing device settings files. The latter portion of the Z-number (Zxxx003 in *Figure 8.17*) denotes the HMI version number.

Figure 8.18 shows the **Settings Editor** window. The settings tree (on the left side) shows the three settings categories the SEL-T400L supports.

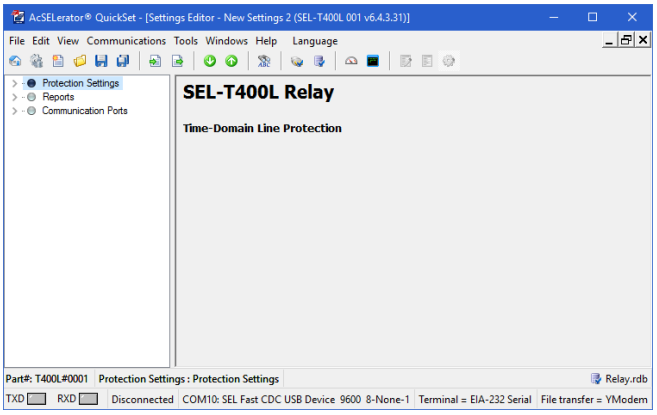

Figure 8.18 Settings Editor Screen

Click each arrow (▷) and button in the settings tree as necessary to expand and select the settings with which you want to work. *Figure 8.19* shows an expanded view of the settings tree.

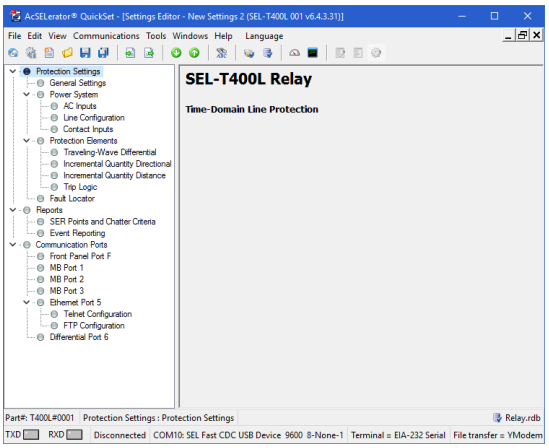

Figure 8.19 Expanded Settings Tree

Entering Settings

To select a setting, either click on it in the settings tree or press **<Tab>** until that setting is highlighted. To restore the previous value for a setting, right-click the setting and select **Previous Value**. To restore the factory-default settings value, select the setting, right-click anywhere in the settings dialog box, and select **Default Value**. If you enter a setting that is out of range or has an error, QuickSet shows the error at the bottom of the **Settings Editor**. Double-click the error listing to go to the setting to enter a valid input.

Expression Builder

Some relay settings, such as the Sequential Events Recorder (SER) settings, consist of a list of Relay Word bits. QuickSet provides the Expression Builder utility in which to organize these lists, making it easy to find, select, and use these Relay Word bits.

Expression Builder is only available for settings with an ellipsis button (...) to the right of the corresponding setting box. For example, if you want to add Relay Word bit TIRIG to SER4 to track the availability of high-accuracy time, click the ellipsis button to the right of SER4, as shown in *Figure 8.20*.

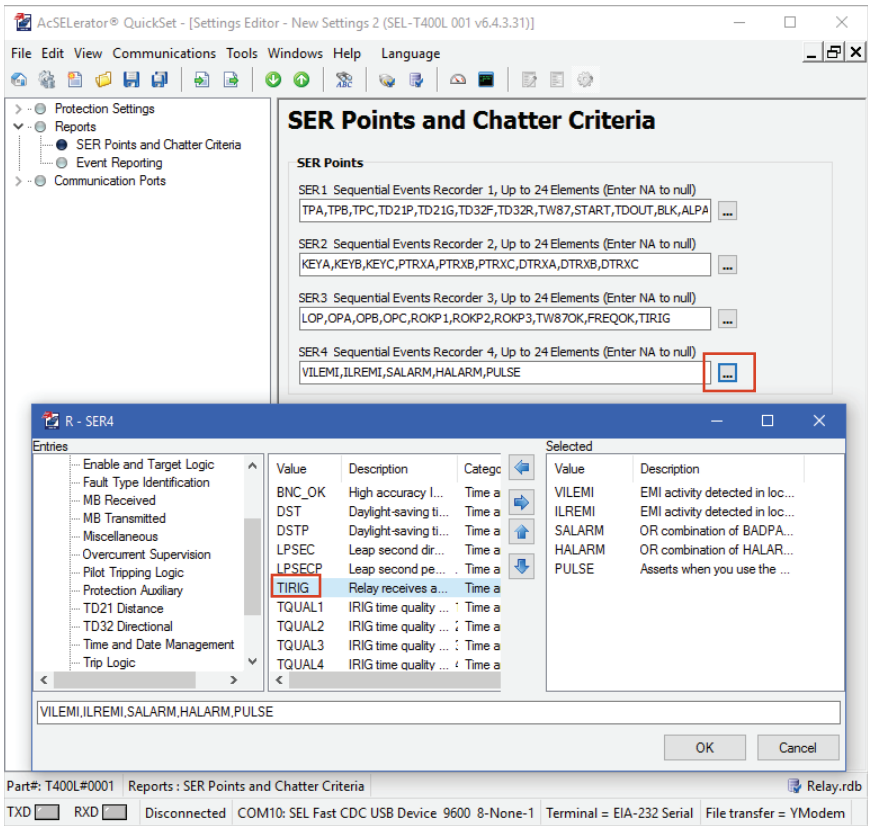

Figure 8.20 Select Relay Word Bit TIRIG

Click the ellipsis to display available Relay Word bits. Scroll to the **Time and Date Management** entry and left-click on that category. The available Time and Date Management Relay Word bits appear. Left-click **TIRIG**, then click the right arrow ( ), as shown in *Figure 8.21*. Relay Word bit TIRIG moves to the **Selected** column and also appears in the list at the bottom of the prompt to indicate that TIRIG is added to the SER4 settings. Click **OK**.

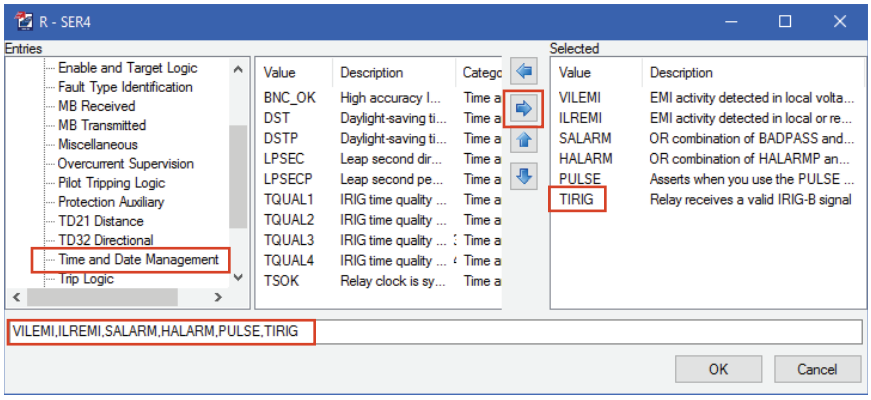

Figure 8.21 Adding Relay Word Bit TIRIG to Setting SER4

Use the up and down arrows to move any Relay Word bit in the **Selected** column up or down in the list, and use the left arrow ( ) to remove a Relay Word bit from the **Selected** list.

The SEL-T400L Relay Word bits are organized in the Expression Builder as follows:

- Arming and Starting Logic
- Communication Channels Diagnostics
- Contact I/O
- Device Monitoring and Alarming
- Enable and Target Logic
- Fault Type Identification
- MB Received
- MB Transmitted
- Miscellaneous
- Overcurrent Supervision
- Pilot Tripping Logic
- Protection Auxiliary
- TD21 Distance
- TD32 Directional
- Time and Date Management
- Trip Logic
- TW Disturbance Detection
- TW32 Directional
- TW87 Differential

File > Save

NOTE: You can also use Device Manager to manage database files (see the *QuickSet Instruction Manual* for more information [click **Help > Contents** to view this manual]).

When you finish making settings changes, click **File > Save** from the menu to save the modified device settings files to a settings database file (with an .rdb extension), which can then be sent to a device at a later time.

File > Open

Click **File > Open** from the menu to open device settings files previously saved in a settings database, as shown in *Figure 8.22*.

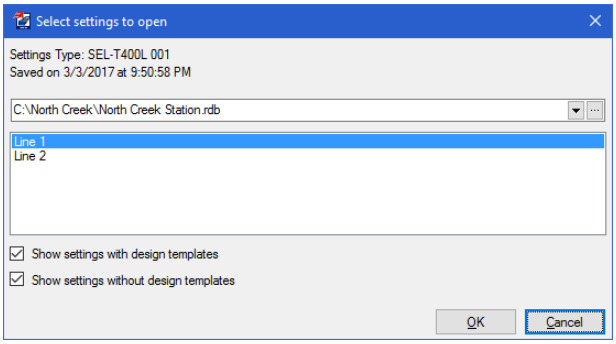

Figure 8.22 Select Settings to Open

File > Read

Click **File > Read** from the menu to load all settings from an SEL-T400L to your PC. If you want the ability to select just certain settings classes to load, navigate to **Tools > Options > Settings** and make sure that the **Specify Groups** check box is selected, as shown in *Figure 8.23*.

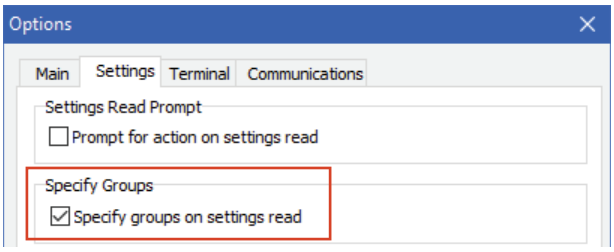

Figure 8.23 Specify Groups Check Box

When you select the **Read** function (with the **Specify Groups** option selected), QuickSet displays the **Settings Group/Class Select** window (shown in *Figure 8.24(a)*). Specify with your selection of check boxes which settings classes you want to read from the SEL-T400L, and click **OK**. When you select only a subset of the available settings classes, QuickSet populates those classes you do not select with default settings, as shown in *Figure 8.24(b)*. As QuickSet reads the device settings, a **Transfer Status** window appears (shown in *Figure 8.24(c)*).

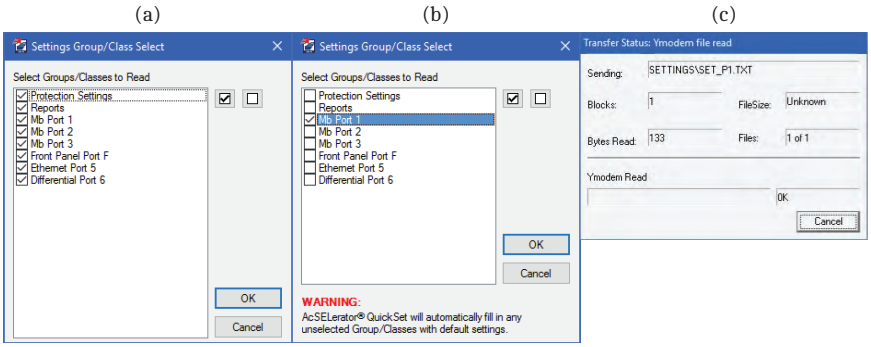

Figure 8.24 (a) Reading All Settings; (b) Reading Port 1 Settings Only; (c) Transfer Status Window

File > Send

Click **File > Send** from the menu to send settings from your PC to an SEL-T400L. Select which settings you want to send and click **OK**. *Figure 8.25(a)* shows an example of sending all settings, and *Figure 8.25(b)* shows an example of sending only Report settings.

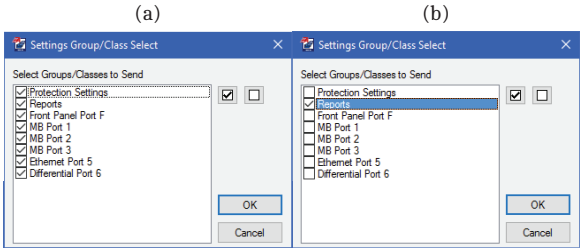

Figure 8.25 (a) Send All Settings; (b) Send Report Settings Only

Communications Menu

Communicate with the SEL-T400L via the front-panel USB Port F or via Ethernet LAN through the rear-panel Port 5.

See *Preparing a PC for Communicating With an SEL-T400L Over Front-Panel USB Port F on page 8.43* for instructions on how to prepare your PC for communication with the SEL-T400L via Port F, and *Establishing Communication With an SEL-T400L Over Front-Panel USB Port F on page 8.44* for information on how to establish communication between QuickSet and an SEL-T400L via Port F.

See *Configuring Port 5 for an Ethernet Local-Area Network on page 8.46* for instructions on how to configure Port 5 for communication over Ethernet LAN, and *Establishing Communication With an SEL-T400L Over Ethernet Port 5 on page 8.49* for information on how to establish communication between QuickSet and an SEL-T400L via Port 5.

Terminal Emulator Window

The terminal window provides an SEL ASCII command language interface to the relay. This is a basic terminal emulation with no file transfer capabilities. Many third-party terminal emulators are available with file transfer capabilities.

Open the terminal window by clicking **Communications > Terminal** from the menu (*Figure 8.26(a)*), clicking the terminal ( ) icon on the toolbar, or by pressing **<Ctrl+T>**. Verify proper communication with the relay by opening a terminal window, pressing **<Enter>** a few times, and verifying that you receive an = (equal) Access Level 0 prompt for each press of the **<Enter>** key, as shown in *Figure 8.26(b)*. If you receive no prompt, verify correct communications setup. Be sure to select the **Send Ctrl Characters** check box to enable the software to process control characters such as **<Ctrl+X>**.

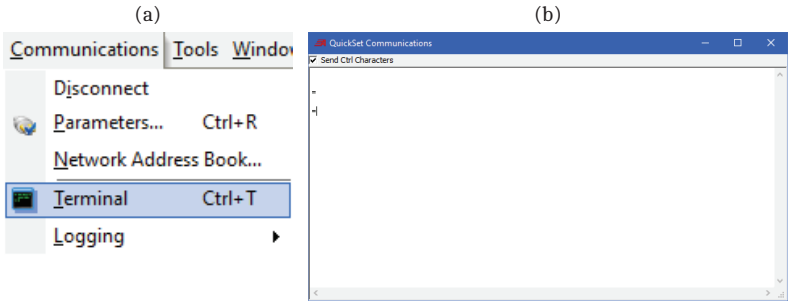

Figure 8.26 (a) Open a Terminal Window From the Menu; (b) Terminal Window

QuickSet can log any terminal session and save it to a text file for future reference. To enable terminal logging, click **Communications > Logging > Terminal Logging**. From the window that appears, you can specify a name and save location for the text file that records all activity in the terminal window. In addition, a check mark appears next to the menu option to indicate that logging is currently enabled, as shown in *Figure 8.27*. To disable terminal logging, click **Communications > Logging > Terminal Logging** again (the check mark disappears, indicating that logging is disabled).

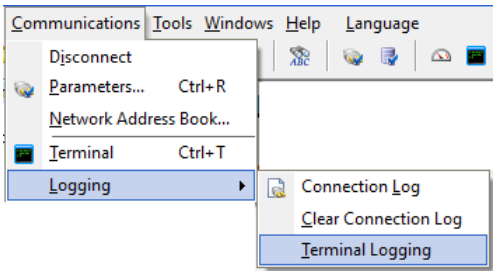

Figure 8.27 Terminal Logging Is Enabled

Tools Menu

The **Tools** menu provides access to the HMI (see *Tools > HMI on page 8.28*), event reports (see *Tools > Events on page 8.30*), and settings menus.

Tools > Settings > Convert

When you need to update settings from an older SVN to a newer SVN, you can convert the older settings to the new SVN through use of the settings conversion utility. To convert settings, click **Tools > Settings > Convert** from the menu. Select **Settings to Convert**, and then select the new SVN to convert, specify the device type (**Device Family**, **Device Model**, and **Version**), and click **Convert** to convert the selected settings. This function is typically used to upgrade an existing settings file to a newer version when installed relays have a newer setting version number. In all settings conversions, new settings in the latest settings version are populated with default settings unless QuickSet indicates otherwise. QuickSet provides a **Convert Settings** report (see *Figure B.1 on page B.4*) that shows missed, changed, and invalid settings resulting from the conversion. Review this report to determine whether you need to modify any settings manually. See *Evaluating Settings Changes and Preparing Settings Files for the New Firmware on page B.4* for additional information.

Import Settings From Text Files

To import settings from text files, navigate to **Tools > Settings > Import**. Use this option when there are multiple saved settings text files for a particular device. Instead of having to import all of the settings, you can select each text file to be imported into the existing device settings. QuickSet will only import files with names corresponding to those files you selected.

Export Settings to Text Files

To export settings to text files, navigate to **Tools > Settings > Export** and then select the relay groups/classes that you want to export. This option will export the present settings into separate text files. This can be useful when you must store the settings in a different format or import them into a different database. The **Export Selection** window provides a list of available Device Groups/Classes as well as four additional options for exporting settings. You can export all visible, valid settings by selecting all groups/classes in the Device Groups pane and clearing the four options, as shown in *Figure 8.28*. The options allow for customization of the data to be exported to text.

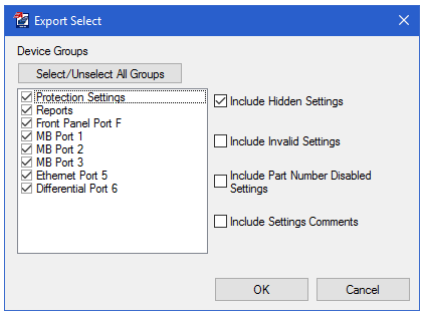

Figure 8.28 Export Settings to Text

Tools > HMI

Click **Tools > HMI** from the menu to view real-time relay information and selected control functions. The HMI function provides the following features:

Device Overview	View the status of control inputs, control outputs, and the virtual front panel.
Phasors	View phase and sequence voltages, currents, and frequency.
Instantaneous	View response to the **MET** command.
Relay Word Bits	View the status of all Relay Word bits.
Status	View a list of relay status conditions.
Communications Port Status	View the status of communications ports.
IRIG Status	View the status of IRIG.
SER	View the Sequential Events Recorder data.
Control Window	Clear event records and SER data, trigger event reports, reset front-panel targets, set the date and time, pulse output contacts, and initiate/cancel the TW test mode.

To open the virtual HMI and download interface data, click **Tools > HMI** in the QuickSet menu bar. You can also click the Human-Machine Interface icon ( ) to access the HMI.

Select the **Device Overview** branch to view the contact input/output status and the status of the front-panel target LEDs, as shown in *Figure 8.29*. You can customize the colors of the contact inputs and outputs. White LED symbols indicate a deasserted condition; any other color indicates an asserted condition.

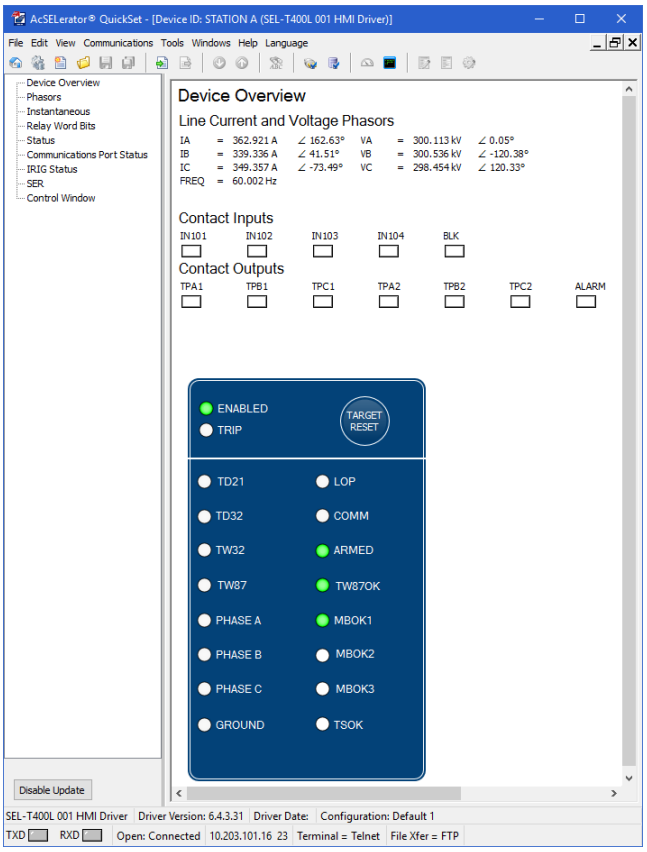

Figure 8.29 Virtual Relay Front Panel

You can save customized **Device Overviews** as HMI configurations. To save the current configuration under the current name, click **Tools > HMI > Save Configuration**; click **Tools > HMI > Save Configuration As** to specify a different configuration name.

HMI configurations are identified by configuration name and relay type. To use an existing configuration, click **Tools > HMI > Select Configuration**. To view available configurations, click **Tools > HMI > Manage**.

Configurations. To make an existing configuration the default configuration for a given relay type, select the configuration in the **Manage Configurations** window, click **Edit**, and select the **Default** check box.

Select the **Control Window** branch (shown in *Figure 8.30*) to clear event records and SER data, trigger event reports, reset front-panel targets, set the date and time, pulse output contacts, and initiate/cancel the TW test mode.

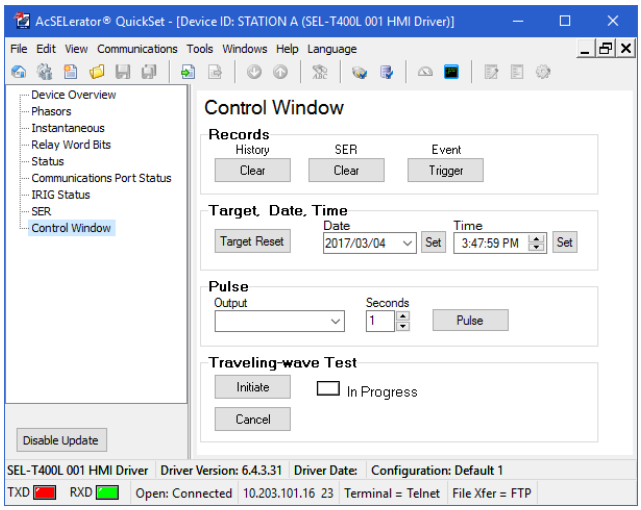

Figure 8.30 Control Window

Tools > Events

The SEL-T400L provides COMTRADE event reports recorded at 10 kHz and 1 MHz sampling rates, labeled as 10 kHz Comtrade Report (TDR) and 1 MHz Comtrade Report (MHR), respectively. To retrieve events from the SEL-T400L, click **Tools > Events > Get Event Files**, as shown in *Figure 8.31*. See *Section 5: Fault and Event Recording* for more information on event analysis.

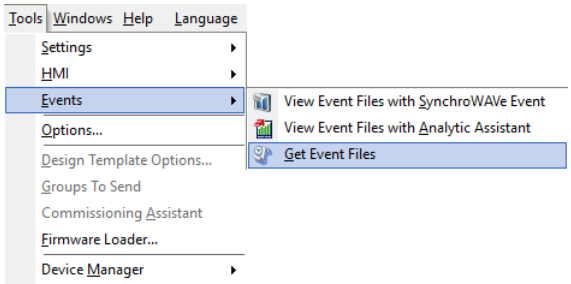

Figure 8.31 Events Menu

The window shown in *Figure 8.32* appears. QuickSet downloads the 10 kHz and 1 MHz event reports in two separate operations.

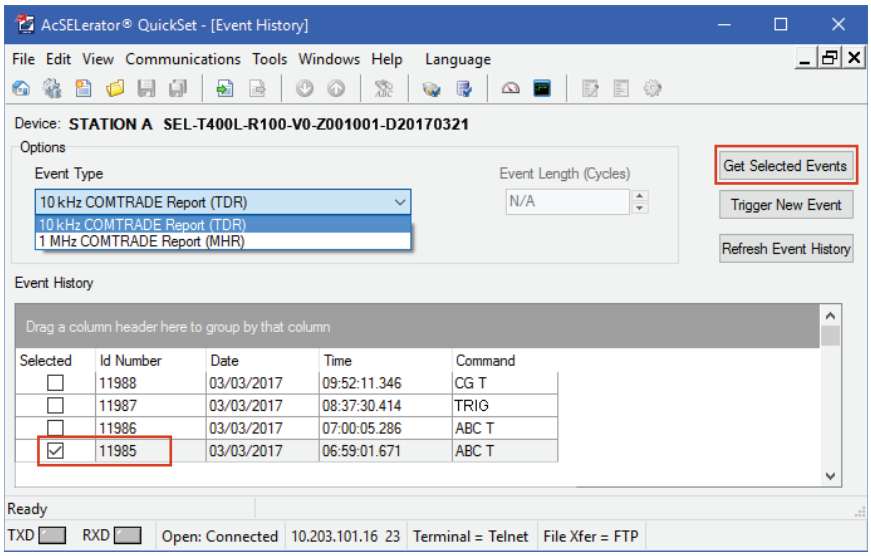

Figure 8.32 Available COMTRADE Event Reports

The **Event History** shows the stored event files. In this example, one event report was stored as a result of a **TRIGGER** command and the other event report was stored as a result of a relay trip (i.e., **Command** column values of TRIG and TRIP, respectively, as shown in *Figure 8.32*). To download the 10 kHz file TRIP event report, select **10 kHz Comtrade Report (TDR)** as the **Event Type**, check the **Selected** box for the record stored as a result of a relay trip (**Id Number** 11985), and click **Get Selected Events**, as shown in *Figure 8.32*.

The window in *Figure 8.33* appears. Either enter the location where you want to store the event reports, or click the ellipsis button and navigate to the location. To download all of the selected event files into a zip folder, leave the **Save As Zip File** check box selected and enter a name for the zip file when prompted.

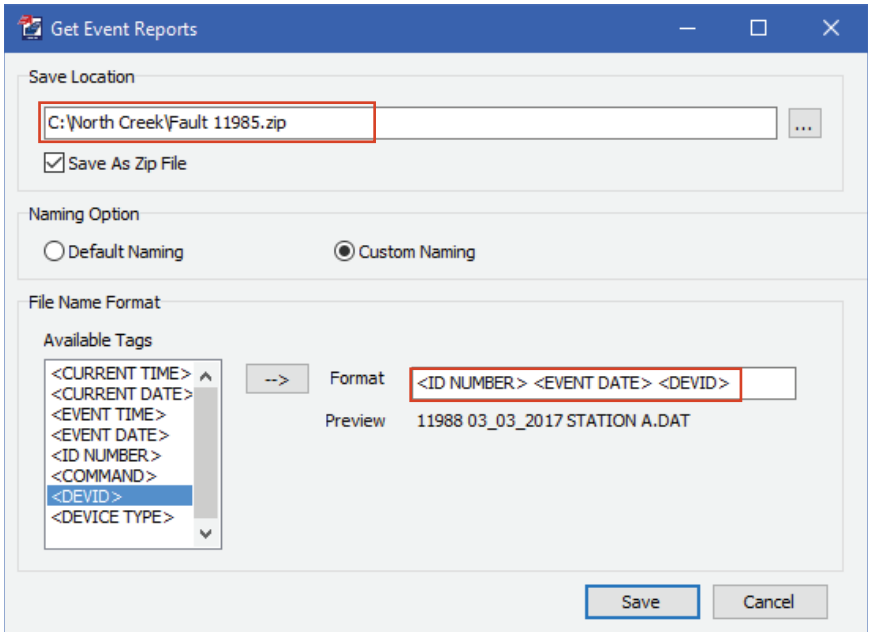

Figure 8.33 Get Event Reports Options

Selecting **Custom Naming** allows you to enter a more descriptive file name for COMTRADE files. Select tags from the **Available Tags** list and click the right arrow (-->) to move these tags to the **Format** box. You can enter spaces between the elements in the file name to make it easier to read. *Figure 8.34(a)* shows the saved COMTRADE files with the file name elements (<ID NUMBER> <EVENT DATE> <DEVID>) shown in *Figure 8.33*. For contrast, *Figure 8.34(b)* shows the default file names. Click **Save** to save the event report.

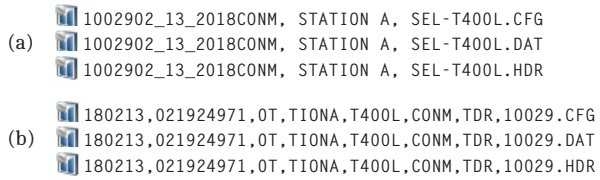

Figure 8.34 (a) Custom File Names; (b) Default File Names

To download the 1 MHz file TRIP event report, select **1 MHz Comtrade Report (MHR)** as the **Event Type**, select the **Selected** check box for the record stored as a result of a relay trip (**Id Number** 11985), and click **Get Selected Events**. Be sure to use a file name other than the 10 kHz file previously saved (e.g., Line 1 MHR.zip).

To trigger a new event, click **Trigger New Event**.

Tools > Event Playback

Figure 8.35 shows the Event Playback options. Use the **File Conversion Utility** to convert COMTRADE files to playback (.ply) test files, and the **Playback Dashboard** to upload the test files to the relay and play them back. *Section 11: Testing and Commissioning* provides details on how to perform these tasks.

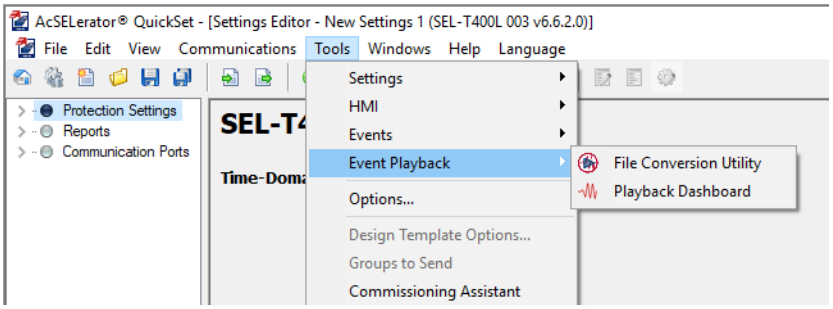

Figure 8.35 Event Playback Menu

Tools > Firmware Loader

The Firmware Loader is a built-in tool that guides you through the process of upgrading the firmware in the device. See *Appendix B: Firmware Upgrade Instructions* for a detailed description of how to use the Firmware Loader.

Help Menu

If you need more information about a particular setting while using QuickSet, left-click the setting and press **<F1>**. QuickSet opens the SEL-T400L Instruction Manual to the relevant section for the selected setting.

If you need more information about QuickSet in general, click **Help > Contents** from the menu to launch the *QuickSet Instruction Manual*.

Updating QuickSet

NOTE: An Internet connection is required to add new drivers in QuickSet and to receive update notifications.

QuickSet consists of the main software program and separate driver files for individual SEL devices. As new device firmware versions are released, you may need to update QuickSet to add new driver files. This can be accomplished by one of the following methods:

- When **Enable Update Notifications** is selected in the **Tools > Options** menu of SEL Compass, the Compass software automatically checks for updates on a specified schedule and facilitates the update process.
- The **Update** icon on the QuickSet initial screen starts SEL Compass and checks for updates.
- The **Install Devices** button on the Settings Editor Selection window starts SEL Compass and presents a menu of available drivers.
- The **Check for updates** option in the Help menu starts SEL Compass and checks for updates.

SEL ASCII Command Language

Human operators can use the SEL ASCII command language to set the relay, interrogate the relay for data, retrieve relay records, and command the relay such as to manually trigger an event record. When using SEL ASCII commands for engineering access, apply a terminal emulator software to type commands and view and copy relay responses. QuickSet includes a simple terminal emulator.

You can use the SEL ASCII command language through the front-panel USB Port F. Port F is intended for temporary usage such as commissioning or testing the relay. You will need a terminal emulator to issue SEL ASCII commands over Port F.

You can also use the SEL ASCII command language over the rear-panel Ethernet Port 5 connected to an Ethernet LAN. You will need a Telnet client to issue SEL ASCII commands over Port 5.

An SEL ASCII command consists of the command, including optional parameters, followed by either a CR character (carriage return) or CR and LF characters (carriage return and line feed) as follows:

<command> <Enter> or **<command> <Enter> <CR>**

The **<Enter>** key on standard computer keyboards sends the ASCII character CR for a carriage return. Press the **<Enter>** key after commands to send the proper ASCII code to the relay.

You may truncate commands to the first three characters. For example, **HISTORY <Enter>** is equivalent to **HIS <Enter>**. You may use upper- and lowercase characters without distinction, except when typing passwords. In response to a command, the relay may respond with an additional dialog line or message. The relay transmits dialog lines in the following format:

<DIALOG LINE ><CR><LF>

The relay transmits messages in the following format:

<STX><MESSAGE LINE 1><CR><LF>
<MESSAGE LINE 2><CR><LF>
…
<LAST MESSAGE LINE><CR><LF>< ETX>

For example, a **COM TW87** command interrogates the SEL-T400L for the status and performance statistics of the communications Port 6. To use the command, type:

```
=>>COM TW87 <Enter>
```

The SEL-T400L responds as follows:

```
SEL-T400L                                   Date: 2017/03/04  Time: 20:25:47.862
Station A                                   Time Source: HIRIG
                                            Serial Number: 1170231369

FID=SEL-T400L-R100-V0-Z001001-D20170321     CID=58D8
Summary for Port 6 protection channel

Port 6 SFP
    1000BASE-SX (850nm, 300/550m)
    Temperature            35.1 C
    Tx Power               0.3123 mW
    Rx Power               0.3280 mW
    MAC Address            00-30-A7-5C-C7-B0


Transmit Address Setting   1
Receive Address Setting    2
Protocol version           0

Channel status
   TW87OK = 1      LINK6 = 1


For 2017/03/04 20:06:10 to 2017/03/04 20:25:47

   Link Delay              0.01 us
   Frames Sent             280722
   Frames Received         280722
   Frames Corrupted        0
   Max SFP Temp            35.2 C
   Max SFP Temp Date       2017/03/04
   Max SFP Temp Time       20:25:24
   Min Rx Power            0.3276 mW
   Min Rx Power Date       2017/03/04
   Min Rx Power Time       20:21:31
```

Table 8.1 lists the most frequently used commands for the frequent engineering tasks. *Appendix C: SEL ASCII Commands* provides a reference table and an alphabetical list of all SEL-T400L ASCII commands.

Machine clients can use the SEL ASCII command language to autonomously interrogate the relay for data and for other SCADA/HMI functions. When programing or configuring a machine client for integration applications, you must observe the printing characters and control characters the ASCII command syntax uses.

The ASCII character set specifies numeric codes that represent printing characters and control characters. See *Table 8.7* for selected control characters of the SEL ASCII command language.

Table 8.7 Selected ASCII Control Characters

Decimal Code	Name	Usage	Keystroke(s)
13	CR	Carriage return	**<Enter>** or **<RETURN>** or **<Ctrl+M>**
10	LF	Line feed	**<Ctrl+J>**
02	STX	Start of transmission	**<Ctrl+B>**
03	ETX	End of transmission	**<Ctrl+C>**
24	CAN	Cancel	**<Ctrl+X>**
17	XON	Flow control on	**<Ctrl+Q>**
19	XOFF	Flow control off	**<Ctrl+S>**

Each ASCII message begins with the start-of-transmission character, STX, and ends with the end-of-transmission character, ETX. Each line of the message ends with a carriage return, CR, and line feed, LF.

Send the CAN character to the relay to abort a transmission in progress. For example, if you request a long report and want to terminate transmission of this report, press **<Ctrl+X>** to terminate the report.

Access Control and Passwords

Access Levels

Access levels restrict operations a user can perform on the SEL-T400L. Each access level is protected by a unique password. Use access level passwords to restrict access for human operators and machine clients. The SEL-T400L access levels are 0, 1, B, 2, and C. Refer to the following information when deciding on access privileges for the SEL-T400L:

- Access Level 0 is the most basic and default level. Its only purpose is to allow a login to Access Level 1.
- Access Level 1 allows you read-only access to relay data such as settings or metering information.
- Access Level B allows you to actuate control outputs of the relay (such as for testing) in addition to all Access Level 1 privileges.
- Access Level 2 allows you to read and write data (such as to modify settings).
- Access Level C allows you access to calibration and other data related to internal relay circuits and computer code. You should perform Access Level C tasks only under direct supervision of SEL personnel. Consider not releasing Level C passwords to your field staff unless absolutely necessary.
- The front-panel HMI effectively operates at Access Level 1 because it provides read-only access to the basic relay identification, status, and metering data (see *Front-Panel Operations on page 8.4*). However, the front-panel HMI does not prompt for a password because the HMI requires a physical presence, and therefore it is protected by the physical security perimeter.

Table 8.8 summarizes the SEL-T400L access levels.

Table 8.8 SEL-T400L Access Levels

Access Level	Prompt	Allowed Operations
0	=	Log in to Access Level 1
1	=>	View data and status information
B	==>	Access Level 1 functions plus **PULSE** command
2	=>>	Perform all user functions
C	==>>	SEL calibration-related functions (**Note:** Use only under direct supervision of SEL personnel)

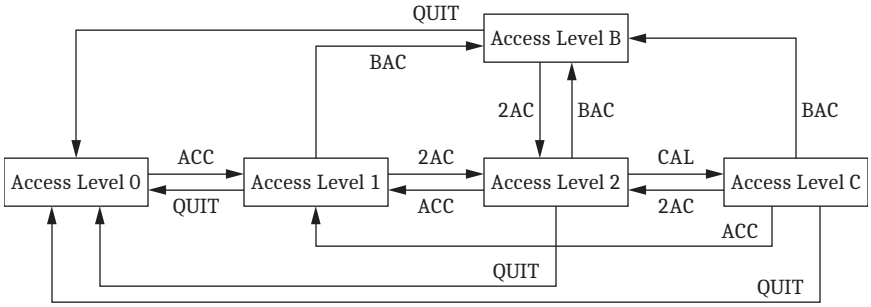

Figure 8.36 Access Level Navigation Structure

As *Figure 8.36* shows, you can move between access levels by using the SEL ASCII commands summarized in *Table 8.9*. See *Appendix C: SEL ASCII Commands* for a full list of SEL ASCII commands, including the access levels at which any given command is available. The SEL-T400L performs command interpretation and execution according to your current access level. Each access level has a password that you must enter before you can control the relay at that level.

Table 8.9 Access Level Commands and Default Passwords

Access Level	SEL ASCII Command	Factory-Default Password
0	QUIT	(None)
1	ACC	OTTER
B	BAC	EDITH
2	2AC	TAIL
C	CAL	CLARKE

The relay prompts for a password in response to **ACC**, **BAC**, **2AC**, and **CAL** commands. You must enter the correct password to enter Access Levels 1, B, 2, and C. Passwords are case-sensitive; you must enter a password exactly as set. If you enter the password correctly, the SEL-T400L moves to the target access level and displays a level-specific prompt as shown in *Table 8.8*.

To support audits of your field work, the relay asserts alarm Relay Word bit ACCESS when entering Access Level B or 2 from a lower access level.

After the third failed password attempt, the SEL-T400L asserts the BADPASS and PASNVAL Relay Word bits for one second, operates the ALARM output contact, and displays the following error message:

```
WARNING: ACCESS BY UNAUTHORIZED PERSONS STRICTLY PROHIBITED
```

You will not be able to make further access level entry attempts for 30 seconds. The relay terminates the Ethernet communications connection after the third failed attempt.

The BADPASS and SALARM Relay Word bits pulse the alarm output of the relay (see *Appendix F: Diagnostics*). Monitor the alarm output to detect failed password entry attempts.

When a connection with the SEL-T400L times out after 15 minutes of inactivity, the relay closes the communications connection for that communications port and reverts to Access Level 0.

Passwords

NOTE: This device is shipped with default passwords. Default passwords should be changed to private passwords at installation. Failure to change each default password to a private password may allow unauthorized access. SEL shall not be responsible for any damage resulting from unauthorized access.

It is important that you change all of the passwords from their default values. This helps protect the relay from unauthorized access. Valid passwords are character sequences of as many as 12 characters and are case-sensitive. Valid password characters are any printable ASCII characters.

See *Cybersecurity Features on page 9.21* for more information about electronic and physical security features of the SEL-T400L.

Changing the Passwords

Use strong passwords. Strong passwords contain a mix of the valid password characters in a combination that does not spell common words in any portion of the password.

Perform the following steps to change passwords:

Step 1. Establish communication with the SEL-T400L.

Step 2. Make sure the Port setting MAXACC = 2, and enter Access Level 2 (Level 2 is sufficient to change passwords, except when changing the Level C password).

a. Type **ACC <Enter>**.

b. Type the Access Level 1 password and press **<Enter>**. The factory-default password is **OTTER**.

c. Type **2AC <Enter>**.

d. At the password prompt, type the Access Level 2 password and press **<Enter>**. The factory-default password is **TAIL**.

e. You will see the Access Level 2 =>> prompt.

Step 3. To set a new password for Access Level 2, use the **PAS 2** command; when prompted, enter the old password, the new password, and a confirmation of the new password, as follows:

```
=>>PAS 2 <Enter>
Old PW: ? **** <Enter>
New PW: ? **** <Enter>
Confirm PW: ? **** <Enter>
Password Changed

CAUTION: This password can be strengthened.  Strong passwords do not include a
name, date, acronym, or word.  They consist of the maximum allowable
characters, with at least one special character, number, lower-case letter, and
upper-case letter.  A change in password is recommended.
```

Step 4. In a similar manner as *Step 3*, create new, strong passwords for Access Levels 1 and B by using the **PAS 1** and **PAS B** commands. To change the Access Level C password, use the **PAS C** command from Access Level C.

Step 5. Following your company procedures and best practices, record your new passwords and store this record in a secure location.

If you forget a password, or encounter difficulty changing the default passwords, you can temporarily disable password verification by means of a jumper on the main board. See *Accessing and Configuring Relay Jumpers on page 10.18* for information on the PASSWORD jumper.

Settings Structure

Settings Menu Tree and Classes

The SEL-T400L settings are organized in a hierarchical manner for ease of use in QuickSet and when using SEL ASCII commands.

When using QuickSet, note that the settings are organized into a three-level-deep structure, as shown in *Table 8.10*. Each menu item of the settings tree corresponds to a settings screen you use to view and edit settings, and to invoke a context-sensitive help for each of the settings.

Table 8.10 SEL-T400L Settings Structure in QuickSet (Sheet 1 of 2)

Settings Tree Category	Function
Protection Settings	All protection and fault locating settings
General Settings	Relay identification; enabling advanced settings
Power System	Settings related to the protected line and CTs/PTs
AC Inputs	AC input configuration
Line Configuration	Line parameters
Contact Inputs	Debounce timers for control inputs
Protection Elements	Settings related to protection elements and schemes
Traveling-Wave Differential	TW87 scheme settings
Incremental Quantity Directional	TD32 element settings
Incremental Quantity Distance	TD21 element settings
Trip Logic	Trip Logic settings
Fault Locator	Settings related to fault locating
Line Monitor	Settings related to line monitoring
Reports	Setting for reporting functions
SER Points and Chatter Criteria	SER settings
Event Reporting	DFR/Oscillography settings
Communications	Settings related to communications ports
Front Panel Port F	USB front-panel Port F settings
Port 1	MIRRORED BITS Port 1 settings
Port 2	MIRRORED BITS Port 2 settings

Table 8.10 SEL-T400L Settings Structure in QuickSet (Sheet 2 of 2)

Settings Tree Category	Function
Port 3	MIRRORED BITS Port 3 settings
Ethernet Port 5	Ethernet engineering access/SCADA Port 5 settings
Telnet Configuration	Telnet settings
FTP Configuration	FTP settings
DNP Configuration	DNP settings
DNP Master *n*[a] Settings	DNP Master *n* settings
DNP Maps	Settings for configurable DNP maps
DNP Map Settings *m*[b]	Configurable DNP map *m* settings
Binary Input Map	Binary Inputs for configurable DNP map *m*
Binary Output Map	Binary Outputs for configurable DNP map *m*
Analog Input Map	Analog Inputs for configurable DNP map *m*
Differential Port 6	Direct point-to-point fiber-optic channel Port 6 settings

[a] *n* = 1–6.
[b] *m* = 1–5.

When you use the SEL ASCII command language, the settings are organized into a single-level structure with three classes, as shown in *Table 8.11*. QuickSet also uses the settings classes and instances when transferring settings to and from the SEL-T400L and when printing or comparing settings.

Table 8.11 View and Set SEL-T400L Settings Classes and Instances

Settings Class	Instance	SEL ASCII Command to View Settings	SEL ASCII Command to Set Settings	QuickSet Menu Item
Protection	N/A	SHO	SET	Protection Settings
Report	N/A	SHO R	SET R	Reports
Port	Port F	SHO P F	SET P F	Communications
	Port 1	SHO P 1	SET P 1	
	Port 2	SHO P 2	SET P 2	
	Port 3	SHO P 3	SET P 3	
	Port 5	SHO P 5	SET P 5	
	Port 6	SHO P 6	SET P 6	
DNP	DNP Map Settings *m*[a]	SHO D *m*	SET D *m*	

[a] *m* = 1–5.

Viewing Settings

In QuickSet, click **View > Settings Editor** from the menu and navigate directly to the setting of interest to view the setting, its description, units, ranges, and a context-sensitive help text.

When using the SEL ASCII command language, view settings by using the **SHO** command, as shown in *Table 8.11*. *Figure 8.37* shows a relay response to the **SHO** command (Protection Settings). The relay responds similarly to **SHO R** (Report Settings) and **SHO P *n*** (Port *n* settings).

```
Protection Settings

General Settings
CONAM   := CONM
SID     := Station A
RID     := SEL-T400L
EADVS   := Y


Power System

AC Inputs
NFREQ   := 60        PHROT   := ABC       LINEI   := IW
OPCS    := LINEI     CTRW    := 200       CTRX    := 200
PTR     := 2000.00   VNOM    := 115


Line Configuration
Z1MAG   := 7.80      Z1ANG   := 84.00
Z0MAG   := 24.80     Z0ANG   := 81.50
LL      := 100.00    LLUNIT  := mi
TWLPT   := 537.00    XC      := 0.00      EXTSC   := N


Contact Inputs
IN101D  := 2.0       IN102D  := 2.0
IN103D  := 2.0       IN104D  := 2.0       BLKD    := 2.0


Protection Elements
Traveling-Wave Differential Element
ETW87   := N


Incremental Quantity Directional Element
TD32ZF  := 0.20      TD32ZR  := 0.20

Incremental Quantity Distance Element
TD21MP  := 0.70      TD21MG  := 0.65


Trip Logic
TR      := TD21P,TD21G,TW87
ETW32   := N         TP67P   := 0.3       TP67G   := 0.3
E3PT    := ONE
E3PT1   := 0
E3PT2   := 0


Fault Locator
FL      := TRIP
FLPORT  := P1
TWCPT   := 0.000     MODE    := CLARKE
LL1     := OFF       LL2     := OFF       LL3     := OFF
LL4     := OFF       LL5     := OFF
TWLPT1  := 10.00     TWLPT2  := 10.00     TWLPT3  := 10.00
TWLPT4  := 10.00     TWLPT5  := 537.00
ARC1B   := 0.00      ARC1E   := 0.00
ARC2B   := 0.00      ARC2E   := 0.00      ARCD    := 1

Line Monitor
ELM     := Y         LMALRM  := 3
LMBL1   := OFF
LMBL2   := OFF
```

Figure 8.37 SEL-T400L Response to the SHO Command (Device/Protection Settings Class)

Figure 8.38 compares the QuickSet settings screen and the response to the **SHO** command for Line Configuration settings.

(a)

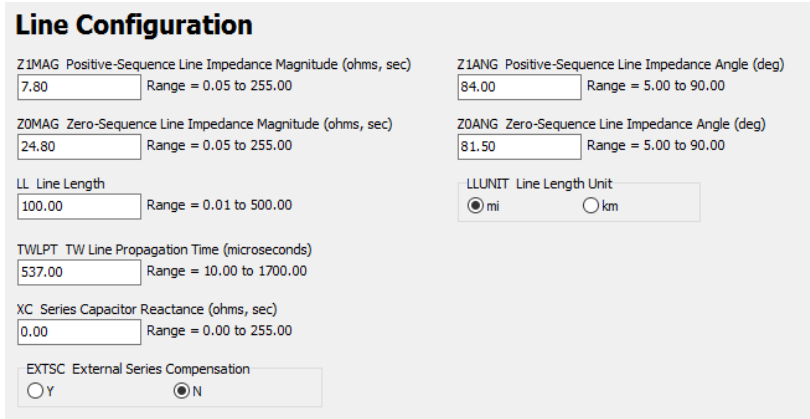

(b)

```
Line Configuration
Z1MAG   := 7.80      Z1ANG   := 84.00
Z0MAG   := 24.80     Z0ANG   := 81.50
LL      := 100.00    LLUNIT  := mi
TWLPT   := 537.00    XC      := 0.00
EXTSC   := N
```

Figure 8.38 Line Configuration Settings: (a) in the QuickSet Settings Screen, and (b) Via the SHO Command

Editing Settings

When using QuickSet, navigate to the setting of interest and edit the settings value. Periodically save your edits.

When using the SEL ASCII command language, use the **SET** command, as shown in *Table 8.11*. When you issue the **SET** command, the relay presents a list of settings one at a time. Enter a new setting, or press **<Enter>** to accept the existing setting. *Table 8.12* lists keystrokes that you can use to speed up access to settings of interest.

Table 8.12 Actions at Settings Prompts

Action	Relay Response
<Enter>	Accept current setting and move to the next setting; if at the last setting, exit settings.
[value] <Enter>	Enter the given value and move to the next setting if valid; if at the last setting, exit settings.
^ <Enter>	Move to the previous setting; if at the top of settings, stay at the present setting.
< <Enter>	Move to the top of the previous settings category; if in the first category, stay at the present setting.
> <Enter>	Move to the next settings category; if in the last category, exit settings.
END <Enter>	Go to the end of the present settings session, select whether to save your settings, and exit the editing session.
<Ctrl+X>	Abort the editing session without saving changes.

As you enter relay settings, the relay verifies the settings entered against the valid ranges for the settings shown in the setting prompt. If you enter a value that is outside of the corresponding range for that setting, the relay responds `Out of Range` and prompts you to reenter the setting.

When you exit from the **SET** command, the relay responds, `Save settings (Y,N) ?`. If you answer **Y <Enter>**, the relay writes the new settings to nonvolatile memory. If you answer **N <Enter>**, the relay discards any settings changes you have made. *Figure 8.39* presents a sample terminal session for the **SET P 1** command.

```
=>>SET P 1 <Enter>

Port 1
Enable Port(Y,N)                                EPORT   := Y          ? Y<Enter>
Enable POTT On This Port(Y,N)                   EPOTT   := Y          ? Y<Enter>
Enable DTT On This Port(Y,N)                    EDTT    := Y          ? Y<Enter>
Data Encoding(MB8,C37.94)                       ENCODING:= MB8        ? MB8<Enter>
Baud Rate(19200,38400,57600,115200)             SPEED   := 38400      ? <Enter>
Transmit Identifier(1,2,3,4)                    TXID    := 2          ? 2<Enter>
Receive Identifier(1,2,3,4)                     RXID    := 1          ? 3<Enter>

EPORT   := Y         EPOTT   := Y         EDTT    := Y
ENCODING:= MB8       SPEED   := 38400     TXID    := 2
RXID    := 3

Save Changes(Y/N)? Y<Enter>

Settings saved
=>>
```

Figure 8.39 Configuring the MIRRORED BITS Port 1 Through Use of the SET Command

At the end of the settings class/instance, the relay provides a summary of all the settings from the current SET dialog before prompting to accept the changes. You can waive the summary by appending the **TE** (TERSE) parameter to the **SET** command, as shown in *Figure 8.40*.

```
=>>SET P 1 TE <Enter>

Port 1
Enable Port(Y,N)                                EPORT   := Y          ? <Enter>
Enable POTT On This Port(Y,N)                   EPOTT   := Y          ? <Enter>
Enable DTT On This Port(Y,N)                    EDTT    := Y          ? <Enter>
Data Encoding(MB8,C37.94)                       ENCODING:= MB8        ? <Enter>
Baud Rate(19200,38400,57600,115200)             SPEED   := 38400      ? <Enter>
Transmit Identifier(1,2,3,4)                    TXID    := 2          ? <Enter>
Receive Identifier(1,2,3,4)                     RXID    := 3          ? <Enter>
Save Changes(Y/N)? Y<Enter>
Settings saved
=>>
```

Figure 8.40 Example of Using the TE Parameter in the SET Command (Compare With *Figure 8.39*)

Refer to *PC Software on page 8.14* for information on how to store, compare, and print relay settings through use of QuickSet.

Communications Setup

The SEL-T400L does not allow settings changes via the front-panel HMI. You must use one of two communications ports—Port F or Port 5—to configure the relay and perform other engineering tasks. The SEL-T400L ships with Port 5 disabled and Port F enabled. Therefore, when working with a new SEL-T400L, you must first use a PC to access the relay on Port F. Upon establishing communication with the relay, either continue working over Port F or enable and configure Port 5 to perform engineering tasks over an Ethernet network.

Preparing a PC for Communicating With an SEL-T400L Over Front-Panel USB Port F

Before using a PC to communicate for the first time with the SEL-T400L, you must prepare that PC as explained in the following text.

Background

You must install a USB 2.0 driver (SEL Fast CDC USB Device) on your Windows PC before you can communicate with the SEL-T400L by means of the front-panel USB 2.0 Port F. The USB driver creates a virtual communications port on your PC suitable for communication with the SEL-T400L over the front-panel Port F (by using such settings as baud rate and parity). Each time you connect a relay to the USB port on your PC, Windows determines if the required driver has already been installed and is ready for use.

When you connect a PC to the front-panel USB Port F, you will encounter one of three possibilities:

1. Reconnecting the relay via Port F to a USB port (on the PC) that has been previously connected to the relay causes Windows to recognize that the driver is already installed and that there is a connection to the same virtual COM port created the first time the relay was connected to that particular USB port (e.g., COM 13). No action is required on your part.
2. Connecting the relay via Port F to a USB port on the PC (in which the USB driver is installed) that has not been previously connected to the relay causes Windows to launch the **Found New Hardware Wizard**. Use the wizard and select **Install the software automatically (Recommended)** and click **Next**. Windows locates the required driver and creates a new virtual COM port (e.g., COM 13). Windows creates a new virtual COM port on your PC each time you connect a relay to a physical USB port that has not previously been connected to that relay. The virtual COM port number remains associated with the same physical USB port on your PC until you uninstall the driver.
3. Connecting a PC for the first time to a relay USB port causes Windows to launch the **Found New Hardware Wizard**. Do not use the wizard; instead, follow the manual installation process described in *Installing the SEL Fast CDC USB Device Driver on page 8.43*.

The USB port uses a connection-based protocol. Under certain circumstances, such as relay reboot, the USB connection may be terminated. If this occurs, either use your Windows application software (such as QuickSet) to reconnect to the relay or disconnect and then reconnect the USB connector at either the computer or the relay.

Installing the SEL Fast CDC USB Device Driver

Obtain the USB driver file “SEL Fast CDC USB Device.inf” from the SEL-T400L product page on the SEL website (selinc.com/products/T400L/), from the corresponding Product Literature CD, or from the ACSELERATOR QuickSet SEL-5030 Installation CD. Place the .inf file in any convenient directory, such as C:\SEL\Drivers\Relay_USB\. Follow the installation instructions available at selinc.com/products/T400L/. To identify your version of the Windows operating system, click the **Start** button, type **winver.exe**, and press **<Enter>**.

Establishing Communication With an SEL-T400L Over Front-Panel USB Port F

Connect an SEL-C664 cable, or any standard A-to-B USB cable, between Port F on the SEL-T400L and your PC.

Using QuickSet Software

Launch QuickSet and select **Communications > Parameters** from the menu or click the **Communication** icon from the welcome screen (See *PC Software on page 8.14* for more information on QuickSet). Your PC should display a communications menu such as that shown in *Figure 8.41*.

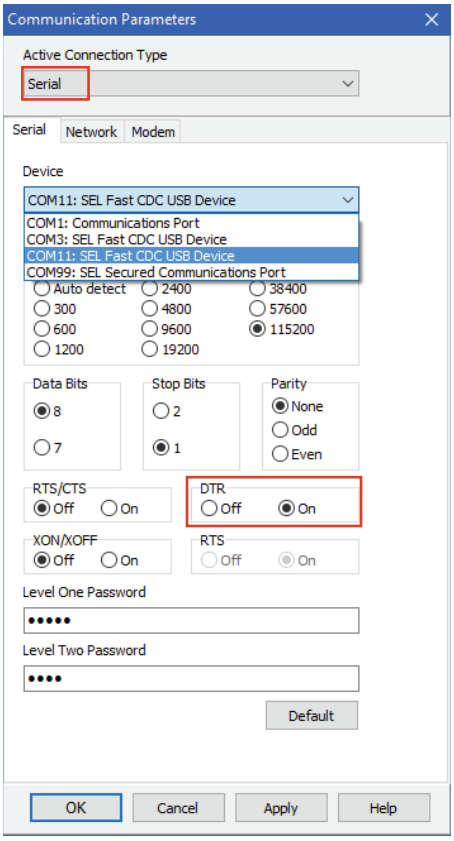

Figure 8.41 QuickSet Communications Parameters for Port F Access

NOTE: If you do not see **COM11: SEL Fast CDC USB Device** as listed in *Figure 8.41*, make sure that the driver is installed properly. If you are unable to install the driver, contact your system administrator for assistance.

To use USB front-panel Port F, select **Serial** from the Active Connection Type menu. Select **COM11: SEL Fast CDC USB Device** from the available drivers in the **Device** list (in the example of *Figure 8.41*). Make sure DTR is turned ON and enter the correct Level One and Level Two passwords. Ignore other settings such as Parity and Baud Rate.

Click **OK** to complete the settings. Click the icon in QuickSet to launch the built-in terminal emulator. If a window such as that shown in *Figure 8.42(a)* appears, the PC and the SEL-T400L are communicating properly. Press **<Enter>** to establish communication with the relay at Access Level 0, as shown in *Figure 8.42(b)*. Type **ACC <Enter>** at the Access Level 0 prompt (=) to enter Access Level 1.

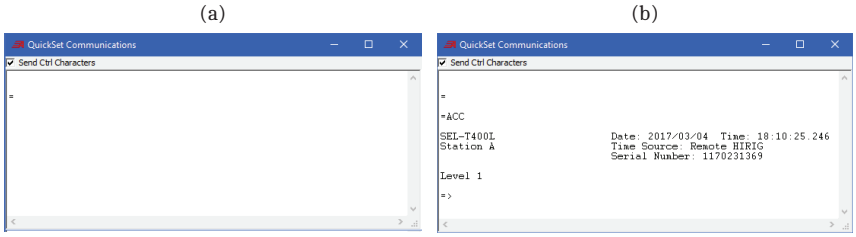

Figure 8.42 (a) Communication Working Properly; (b) Communicating With the Device

If the driver is properly installed, but you still have difficulty communicating with the relay, perform the following steps:

1. Close the communications window (*Figure 8.41*).
2. Disconnect the USB cable.
3. Wait 10 seconds.
4. Reconnect the USB cable.
5. Click **Communications > Parameters** from the menu to open the communications window.
6. Select **COM11: SEL Fast CDC USB Device** from the available drivers in the Device list.
7. Click **OK**.

Using a Terminal Emulator

Open Device Manager in Windows to determine which virtual port has been assigned to the SEL Fast CDC USB driver. Make sure to specify that assigned port in your terminal emulator, as shown in *Figure 8.43*.

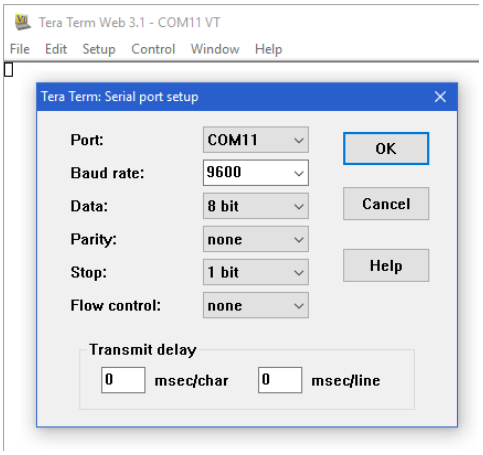

Figure 8.43 Selecting the USB Communications Port in the Terminal Emulator

You can ignore the BAUD setting. If you do not see the assigned communications port listed (COM 13 in the example shown in *Figure 8.43*), make sure that the driver is installed properly. If you are unable to install the driver, contact your system administrator for assistance.

Launch your terminal emulator. If the window shown in *Figure 8.42(a)* appears, the PC and the SEL-T400L are communicating properly. Press **<Enter>** to establish communication with the relay at Access Level 0, as shown in *Figure 8.42(b)*.

If the driver is properly installed, but you still have difficulty communicating with the relay, perform the following steps:

1. Close your terminal emulator.
2. Disconnect the USB cable.
3. Wait 10 seconds.
4. Reconnect the USB cable.
5. Open your terminal emulator.
6. Select the assigned port in your terminal emulator.

Changing Port F Settings

Front-panel Port F is enabled by default and you must use it to communicate with the relay for the first time. You must use Port F to enable and configure Ethernet engineering access and SCADA/HMI on Port 5 before you can use Port 5.

Use the Port F settings shown in *Table 8.13* to control Port F access.

Table 8.13 Port F Settings

Name	Description	Range	Default
EPORT	Enable the port	Y, N	Y
MAXACC	Set the maximum access level for the port	1, B, 2, C	C

EPORT

Use the EPORT setting to enable and disable Port F. Keep in mind that the SEL-T400L does not allow settings changes via the front-panel HMI, and it has two engineering access ports—Port F and Port 5. If you disable both Port F and Port 5, you will not be able to access the relay. Should this happen, use the password jumper to regain access to the relay over Port F (see *Accessing and Configuring Relay Jumpers on page 10.18*).

NOTE: If you disable both Port F and Port 5, you will not be able to access the relay and will have to use the password jumper to regain access.

MAXACC

Use the MAXACC setting to set the maximum access level for Port F. Note that you need to provide authentication with a unique access password before you can enter a given access level. The MAXACC setting restricts the highest access level on Port F even for users with valid passwords for levels above MAXACC.

Configuring Port 5 for an Ethernet Local-Area Network

Before connecting the SEL-T400L to your substation Ethernet LAN and using Port 5 for engineering access and SCADA/HMI functions, you must configure Port 5 to match your LAN configuration. The SEL-T400L does not allow settings changes via the front-panel HMI, and therefore you need to use the front-panel USB Port F to configure Ethernet Port 5 (see *Preparing a PC for Communicating With an SEL-T400L Over Front-Panel USB Port F on page 8.43*).

Table 8.14 shows Port 5 settings. Contact your Information Technology or Substation Communications group responsible for network configuration and request network settings for a specific SEL-T400L asset (network device).

Table 8.14 Port 5 Settings

Name	Description	Range	Default
EPORT	Enable the port	Y, N	N
IPADDR	Device IP address assigned by network administrator	IP address *w.x.y.z* where: *w*: 1–126, 128–223 *x*: 0–255 *y*: 0–255 *z*: 0–255	192.168.1.2
SUBNETM	Subnet mask	Subnet mask *w.x.y.z* where: *w* = 128, 192, 224, 240, 248, 252, 254, 255 *x* = y = 0, 128, 192, 224, 240, 248, 252, 254, 255 *z* = 0, 128, 192, 224, 240, 248, 252, 254	255.255.255.0
DEFRTR[a]	Default router IP address	IP address *w.x.y.z* where: *w*: 1–126, 128–223 *x*: 0–255 *y*: 0–255 *z*: 0–255	192.168.1.1
ETCPKA	Enable TCP keep-alive—applies to all TCP communications	Y, N	Y
KAIDLE	Time to wait with no detected activity before sending a keep-alive packet	1–20 s (must be greater than or equal to KAINTV)	10
KAINTV	Time to wait between sending keep-alive packets after receiving no response for the prior keep-alive packet	1–20 s (must be less than or equal to KAIDLE)	10
KACNT	TCP keep-alive count range	1–20	5
ETELNET	Enable Telnet	Y, N	N
MAXACC	Maximum access level	0, 1, B, 2, C	2

[a] To disable the default router, set DEFRTR = 0.0.0.0.

The SEL-T400L ships with Port 5 disabled (EPORT = N). Port 5 settings are well-established Ethernet standard settings. This instruction manual does not provide any specific recommendations for these settings. Follow your company policies and the recommendations of your Information Technology or Substation Communications group when selecting Ethernet Port 5 settings. When enabling and configuring Port 5, you may leave Telnet disabled (ETELNET = N) because it is not integral to the basic operation of Port 5. You may use Port 5 settings to enable and configure Telnet at a later time. See *Section 9: SCADA and HMI Protocols* for more information on Port 5 settings.

Configuring Port 5 Through Use of SEL ASCII Commands

You can use QuickSet when configuring Port 5 as a part of a complete SEL-T400L settings file. You can also configure Port 5 settings through use of the SEL ASCII command language interface on Port F (as shown in the following example).

You can use a terminal emulator or the terminal function in QuickSet to execute commands. To change settings, including Port settings, you must be at Access Level 2. From Access Level 0, execute the **ACC** and **2AC** commands to enter Access Level 2.

```
=ACC <Enter>
Password: ? *****

SEL-T400L                                  Date: 2017/03/04  Time: 17:55:37.083
Station A                                  Time Source: HIRIG
                                           Serial Number: 1170231369

Level 1


=>2AC <Enter>
Password: ? **** <Enter>

SEL-T400L                                 Date: 2017/03/04  Time: 17:55:45.659
Station A                                  Time Source: HIRIG
                                           Serial Number: 1170231369

Level 2

=>>
```

From Access Level 2, execute the **SET P 5 TE** command to enable and set the Ethernet Port 5 (the **TE** parameter is optional).

```
=>>SET P 5 TE <Enter>

Port 5

Ethernet Settings
Enable Port(Y,N)                              EPORT   := N          ? Y <Enter>

Device IP Address(w.x.y.z)
IPADDR  :=  192.168.1.2
     ? 167.59.53.12 <Enter>

Subnet Mask(w.x.y.z)
SUBNETM :=  255.255.255.0
     ? <Enter>

Default Router(w.x.y.z)
DEFRTR  :=  192.168.1.1
     ? 167.59.53.1 <Enter>


Enable TCP Keep-Alive(Y,N)                    ETCPKA  := Y          ? <Enter>

TCP Keep-Alive Idle Range(1-20 s)             KAIDLE  := 10         ? <Enter>

TCP Keep-Alive Interval Range(1-20 s)         KAINTV  := 10         ? <Enter>

TCP Keep-Alive Count Range(1-20)              KACNT   := 5          ? <Enter>

Telnet Configuration
Enable Telnet(Y,N)                            ETELNET := N          ? Y <Enter>

Maximum Access Level(0,1,B,2,C)               MAXACC  := 2          ? END <Enter>

Save Changes(Y/N)? Y <Enter>

Settings saved
=>>
```

Issue the **QUIT** command to exit Access Level 2.

Using an LC-terminated fiber-optic cable or patch cord, connect Port 5 to a selected port of your LAN Ethernet switch. Issue a **PING** command from your PC to verify that the SEL-T400L is present on the network as expected. If the relay is not present on the network, apply standard Ethernet testing and troubleshooting methods. Seek help from your Information Technology or Substation Communications group, as necessary, if you encounter LAN connectivity problems with your SEL-T400L.

Establishing Communication With an SEL-T400L Over Ethernet Port 5

Make sure your PC is connected to the same LAN as, and has access to, the target SEL-T400L. Issue a **PING** command from your PC as necessary to confirm connectivity to the target SEL-T400L. If your PC does not have connectivity to the target SEL-T400L, rectify the problem first before working with QuickSet or the terminal emulator (see *ETHERNET Report on page 8.50*).

Using QuickSet

Launch QuickSet, select **Communications > Parameters**, and choose **Network** for the connection type, as shown in *Figure 8.44*.

Enter the following parameters in the QuickSet configuration window:

- IP address for the target SEL-T400L (Host IP address).
- File transfer option. The default logical port numbers for Telnet and FTP are 23 and 21, respectively.
- Level One and Level Two passwords.

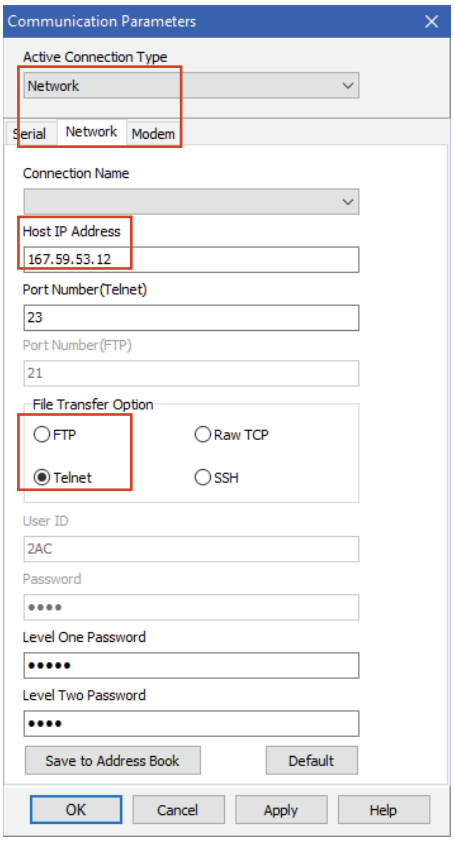

Figure 8.44 QuickSet Communications Parameters for Port 5 Access

Click **OK** to complete the settings. To verify your Port 5 connectivity, start a Telnet session. Telnet communication is equivalent to serial communication in that both methods of communication use a terminal emulator. The only difference is that Telnet communication is over Ethernet via rear-panel Port 5, and serial communication is via the front-panel USB Port F.

Using a Terminal Emulator

To start the Telnet session, launch the built-in terminal emulator by clicking the icon in QuickSet. If the window shown in *Figure 8.45(a)* appears, the PC and the SEL-T400L are communicating properly. Press **<Enter>** to establish communication with the relay at Access Level 0, as shown in *Figure 8.45(b)*. Type **ACC <Enter>** at the Access Level 0 prompt (=) to enter Access Level 1.

(a) (b)

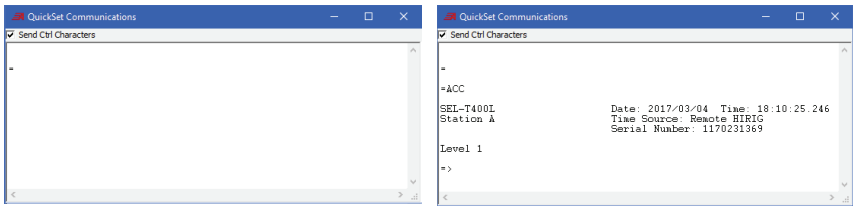

Figure 8.45 (a) Communication Working Properly; (b) Communicating With the Device

If you do not see the window in *Figure 8.45(a)*, perform the following actions:

- Verify that the IP addresses of both the SEL-T400L and your PC are correct
- Verify that Telnet is enabled in the SEL-T400L (ETELNET = Y)
- Verify that the switch/router configurations are correct

ETHERNET Report

You can use the **ETH** command (see *ETHERNET on page C.7*) to troubleshoot Port 5 Ethernet connections. When the Port 5 transceiver is installed and the port is enabled (EPORT = Y), the **ETH** command displays link status, speed, and other related Port 5 information. *Figure 8.46* shows the report format, and *Figure 8.47* shows an example report.

```
 [common header]

MAC: xx-xx-xx-xx-xx-xx
IP ADDRESS: www.xxx.yyy.zzz
SUBNET MASK: www.xxx.yyy.zzz
DEFAULT GATEWAY: www.xxx.yyy.zzz

            LINK   SPEED  DUPLEX  MEDIA
PORT 5      xxxx   xxxxx  xxxx    xx

       PACKETS                BYTES              ERRORS
     SENT     RCVD        SENT       RCVD     SENT    RCVD
     xxxx     xxxx      xxxxxxx    xxxxxxx    xxxx    xxxx
```

Figure 8.46 Data Items in the ETHERNET Report

```
SEL-T400L                                  Date: 2017/03/08  Time: 20:41:13.564
Station A                                  Time Source: HIRIG
                                           Serial Number: 1170231369

MAC: 00-30-A7-4C-43-55
IP ADDRESS: 192.168.1.2
SUBNET MASK: 255.255.255.0
DEFAULT GATEWAY: 192.168.1.1

            LINK   SPEED  DUPLEX  MEDIA
PORT 5      Up     1G     Full    SX

       PACKETS                BYTES              ERRORS
     SENT     RCVD        SENT       RCVD     SENT    RCVD
     5625     5625      8535842     360244       0       0
```

Figure 8.47 Sample ETHERNET Report

Table 8.15 explains the ETHERNET report fields.

Table 8.15 Information Included in the ETHERNET Report

Data Item	Description	Comments and Troubleshooting
MAC	Port 5 Media Access Control Address	The MAC address is assigned at the factory and should not be modified. Use the displayed MAC address to identify network traffic originating at this relay when troubleshooting network problems using a third-party analyzer.
IP ADDRESS	IP address defined in the Port 5 IPADDR setting	The IP address is typically assigned by your network administrator. If you encounter communications issues, consult your network administrator to verify if the displayed address is allowed on your network.
SUBNET MASK	Subnet mask defined in the Port 5 SUBNETM setting	The subnet mask divides the IP address into the subnet part, common to all devices on the local IP segment, and a unique part, identifying this relay. Consult your network administrator to verify if the displayed mask matches the local network configuration rules.
DEFAULT GATEWAY	Default IP gateway (router) address defined in the Port 5 DEFRTR setting	Consult your network administrator to obtain the default gateway address. The default gateway address cannot be the same as the IP Address, Network Address, or Broadcast Address.
LINK	Port 5 Link status	This field displays the current link status (Up or Down). If the link is down, check the Port 5 fiber connections, the Port 5 SFP module (verify that it is inserted and latched fully; see *Installing and Replacing SFP Transceivers on page 10.14*), and the link activity light located below it.
SPEED	Port 5 link speed	With SEL-supplied fiber-optic transceivers, Port 5 link speed is always 1G (one gigabit per second).
DUPLEX	Port 5 link operating mode	With SEL-supplied fiber-optic transceivers, Port 5 communications are always operating in full duplex mode.
MEDIA	Port 5 communications media designation (1000Base-*xx*)	Where *xx* indicates the type of the Port 5 fiber-optic transducer. Options include: ➤ SX for 850 nm short-range multimode fiber ➤ LX for 1310 nm 10–40 km single-mode fiber ➤ XD for 1550 nm 50 km single-mode fiber ➤ ZX for 1550 nm >50 km single-mode fiber

Additional counter fields PACKETS SENT, PACKETS RECEIVED, BYTES SENT, BYTES RECEIVED, ERRORS SENT, and ERRORS RECEIVED are self-explanatory. Use these fields to detect a broken fiber and to monitor the amount of traffic flowing through Port 5. ERRORS SENT and ERRORS RECEIVED fields count the number of packet errors and should remain at or close to zero. Increased count in these fields indicates noisy communications with insufficient link margin. Counters that are incremented until they are full are indicated by $$$$$$$.

Use the **ETH C** or **ETH R** command to clear the Ethernet connection statistics.

MAC Report

Use the **MAC** command (see *MAC on page C.10*) to inspect the Media Access Control (MAC) addresses for Port 5 (Ethernet) and Port 6 (SEL proprietary). *Figure 8.48* shows a sample **MAC** command response. MAC addresses are set at the factory and cannot be modified by the user. Contact SEL on the rare occasion that such a change may be necessary.

```
Port 5 (IP) MAC Address:               00-30-A7-4C-43-55
Port 6 (SEL Proprietary) MAC Address:  00-30-A7-4C-43-57
```

Figure 8.48 Sample MAC Command Response

Use the displayed MAC address to identify network traffic originating at this relay when troubleshooting network problems through use of a third-party analyzer.

SECTION 9

SCADA and HMI Protocols

Introduction

SCADA systems and other machine clients can communicate with the SEL-T400L through use of the following protocols:

- **DNP3 LAN/WAN Communications Protocol.** The SEL-T400L supports DNP3 LAN/WAN on Ethernet Port 5. Use DNP3 to retrieve metering data, Relay Word bit status, and fault summary information, including fault location, fault type, and the traveling-wave arrival time. Optimize data collection by using up to five configurable data maps that allow you to select and organize the data you need in up to six concurrent DNP sessions.
- **SEL ASCII commands.** SEL ASCII commands enable communication between a human operator and the relay via any standard terminal emulator or Telnet client. A computer can also use the SEL ASCII protocol to communicate with the relay, collect data, and issue commands. *Section 8: Engineering and Operator Access Interfaces and Tools* provides information on how to use SEL ASCII commands for engineering access, and *Appendix C: SEL ASCII Commands* describes SEL-T400L commands.
- **SEL Compressed ASCII commands.** SEL Compressed ASCII commands are a subset of SEL ASCII commands to which the SEL-T400L responds with comma-delimited messages formatted for ease of parsing by machine clients. Use SEL Compressed ASCII commands to obtain data contained in relay reports. Refer to *SEL Compressed ASCII Commands on page 9.9* for detailed information on how to use the SEL Compressed ASCII protocol. As many as three machine clients can interact concurrently with the SEL-T400L through use of SEL Compressed ASCII commands over Ethernet. Consider using a real-time automation controller (RTAC), such as the SEL-3530, as your SEL Compressed ASCII protocol client and SCADA gateway.
- **SEL Fast Meter and SEL Fast SER.** These are binary machine-to-machine protocols for obtaining time-variant data (metering and status) and SER data. SEL Fast Meter and SEL Fast SER communications transactions can be used concurrently with the SEL ASCII protocol session. SEL Fast Meter and SEL Fast SER protocols complement the SEL Compressed ASCII commands. Use the Fast Meter protocol to solicit time-variant data. Use the Fast SER protocol to obtain data typically contained in SEL-T400L reports. As many as three machine clients can concurrently interact with the SEL-T400L through use of these protocols over Ethernet. Consider using an RTAC, such as the SEL-3530, as your SEL Fast Meter and SEL Fast SER protocol client and SCADA gateway.

- **File Transfer Protocol.** File Transfer Protocol (FTP) is a standard TCP/IP protocol for exchanging files. Use FTP on Ethernet Port 5 for access to the SEL-T400L files including settings, reports, and event records. Use any standard FTP client such as Windows Explorer or an Internet browser.
- **Fast Time-Domain Values Streaming.** Fast Time-Domain Values (FTDV) protocol is a novel SEL protocol for streaming very-high-fidelity voltage and current values in real time to client software residing on a high-performance computing platform. The SEL-T400L either broadcasts or multicasts the FTDV packets according to the IP address setting. Contact SEL for prototype FTDV client software compatible with SEL high-performance computing platforms.

Table 9.1 summarizes the SEL-T400L protocols and their applications.

Table 9.1 SEL-T400L Ports, Protocols, and Applications

Port	Protocols	Application Description
Port F; USB	SEL ASCII commands SEL Compressed ASCII commands SEL Fast Meter and Fast SER	Temporary local engineering access for maintenance, testing and commissioning, and upgrading firmware.
Port 5; Ethernet	DNP3 LAN/WAN[a] SEL ASCII commands[b] SEL Compressed ASCII commands[b] SEL Fast Meter and Fast SER[b] FTP[c]	Remote engineering access and permanent connection to SCADA or HMI client.
	FTDV Streaming	Real-time continuous monitoring and recording of 1 MHz samples on a high-performance computing platform.

[a] As many as six concurrent sessions.
[b] Via Telnet; as many as three concurrent sessions.
[c] Single session.

This section is organized as follows:

- *DNP3 LAN/WAN Protocol on page 9.3* explains how to enable DNP3 LAN/WAN communications on Ethernet Port 5 and describes the basic DNP configuration settings necessary for communicating with your SCADA system. For additional information on DNP3 in the SEL-T400L, see *Appendix I: Distributed Network Protocol*.
- *File Transfer Protocol on page 9.4* explains how to enable and configure FTP on Ethernet Port 5 and how to use an FTP client to browse and copy relay files.
- *Telnet Protocol on page 9.6* explains how to enable and configure Telnet on Ethernet Port 5 to allow usage of SEL ASCII commands, SEL Compressed ASCII commands, and SEL Fast Meter and SEL Fast SER protocols.
- *Fast Time-Domain Values on page 9.7* explains how to enable and configure streaming of 1 MHz voltage and current samples on Ethernet Port 5.
- *SEL Compressed ASCII Commands on page 9.9* explains how to use SEL Compressed ASCII commands to communicate with the SEL-T400L.

- *SEL Fast Meter and SEL Fast SER Protocols on page 9.15* explains how to use SEL Fast Meter and SEL Fast SER protocols to support automated data collection and reporting of metering and other information.
- *SEL-T400L File Directories on page 9.17* provides information on the relay files and directories. These files include settings files, reports, event records, and diagnostic records.
- *Cybersecurity Features on page 9.21* summarizes cybersecurity features of the SEL-T400L and provides guidelines for secure application of the relay.

DNP3 LAN/WAN Protocol

The SEL-T400L supports up to 6 concurrent DNP3 LAN/WAN sessions on Ethernet Port 5 for communicating with your SCADA system. Use DNP3 to retrieve metering data, Relay Word bit status, fault summary information (including fault location, fault type, prefault and fault currents and voltages, and traveling-wave arrival time), and line monitoring data. See *Appendix I: Distributed Network Protocol* for more information on DNP3 LAN/WAN in the SEL-T400L.

Table I.2 on page I.2 shows the complete list of DNP3 settings. The following section describes SEL-T400L DNP3 communication settings required to establish DNP3 LAN/WAN communications with your SCADA system.

DNP Communications Settings

Table 9.2 lists the DNP Port 5 communications settings. These settings apply to all DNP sessions.

Table 9.2 Port 5 Settings Related to the DNP Protocol

Name	Description	Range	Default
EDNP	Enable DNP Sessions	0–6	0
DNPADR	Device DNP Address	0–65519	0
DNPPNUM	DNP TCP and UDP Port	1025–65534	20000
EVELOCK	Event Summary Lock Period	0–1000 seconds	0
DNPID	DNP ID for Object 0, Var 246	20 characters	RELAY1-DNP

EDNP

Use the EDNP setting to enable up to 6 DNP sessions (EDNP = 1–6) on Ethernet Port 5. Set EDNP = 0 to disable DNP. Make sure that the port is enabled (EPORT = Y) and configured properly for use on your Ethernet LAN. See *Establishing Communication With an SEL-T400L Over Ethernet Port 5 on page 8.49* for instructions on how to configure Port 5.

DNPADR

Use the DNPADR setting to specify the SEL-T400L DNP address.

DNPPNUM

Use the DNPPNUM setting to specify the TCP or UDP port for DNP3 LAN/WAN communications. If Telnet is enabled (ETELNET = Y), the DNP TCP or UDP port setting must be different than the Telnet port setting.

EVELOCK

Use the EVELOCK setting to specify the event summary lock period to ensure your DNP3 master has enough time to fetch all the intended data for an event. When DNP session *n* (*n* = 1–6) is in the single-event mode (see *Reading Relay Event Data on page I.13*), any new event causes event data to be latched into the event registers and made available in the DNP event summary data. The relay will not update the event registers for subsequent events for EVELOCK time. See *Reading Relay Event Data on page I.13* for additional information on EVELOCK, RPEVTYP*n*, and related settings.

DNPID

Set the DNP ID that will be returned for reads of Object 0, Variation 246.

File Transfer Protocol

FTP is a standard application-level protocol for exchanging files between computers over a TCP/IP network. The SEL-T400L operates as an FTP server presenting files to an FTP client. Use FTP to move files from the SEL-T400L to your SCADA/HMI computer. Typical applications include retrieval of event files.

You need Access Level 2 privileges to use FTP with the SEL-T400L. The relay serves one FTP session and denies any subsequent requests to establish multiple FTP sessions. You can use Telnet and FTP concurrently on the Ethernet Port 5.

Table 9.3 shows the FTP settings for the Ethernet Port 5.

Table 9.3 FTP Settings for Port 5

Name	Description	Range	Default
EFTPSERV	Enable FTP	Y, N	N
FTPUSER	FTP Username	ASCII string (maximum length of 20 characters)	2AC
FTPCBAN	FTP Connect banner	ASCII string (maximum length of 254 characters)	FTP SERVER
FTPIDLE	FTP Idle time-out	5–255 minutes	5 minutes

EFTPSERV

Enable (EFTPSERV = Y) or disable (EFTPSERV = N) FTP on Ethernet Port 5. Ensure Port 5 is enabled (EPORT = Y) and configured properly for use on your Ethernet LAN. See *Establishing Communication With an SEL-T400L Over Ethernet Port 5 on page 8.49* for instructions on how to configure Port 5. Issue the **PING** command from the computer to verify that your FTP client computer is connected to the target relay. If you experience problems with FTP, troubleshoot communications settings for your PC and the relay Port 5, the FTP client configuration, and your network configuration.

FTPUSER

Use the **FTPUSER** setting to specify the FTP username. Your FTP client will need to identify itself with this **FTPUSER** name and the Access Level 2 password (factory default is TAIL) at the start of the FTP session.

FTPCBAN

Use the **FTPCBAN** setting to specify the connect banner. The relay responds with this banner during the FTP session. Consider using unique banners to ensure your FTP client has accessed the correct relay.

FTPIDLE

Use the **FTPIDLE** setting to specify the time-out period for an inactive session. The relay terminates an FTP session after the client is inactive for **FTPIDLE** time.

You can use any compliant FTP client with the SEL-T400L over a TCP/IP Ethernet network. Note that Internet browsers often provide FTP functionality and that Windows Explorer also supports FTP.

To initiate an FTP session through use of Explorer or an Internet browser, type **ftp://** followed by the IP address of the target relay. You will see a prompt similar to that shown in *Figure 9.1*. Enter the username specified for the **FTPUSER** setting (the default is **2AC**) and your Access Level 2 password (the default is TAIL), and click **Log On**. After you have successfully logged on, you will see the SEL-T400L file directory, as shown in *Figure 9.2*, which you can browse, copy files from, and copy files to.

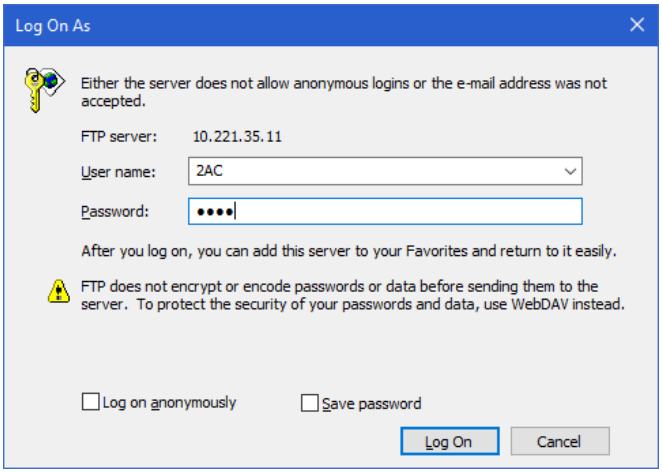

Figure 9.1 Windows Explorer FTP Client Logon Window

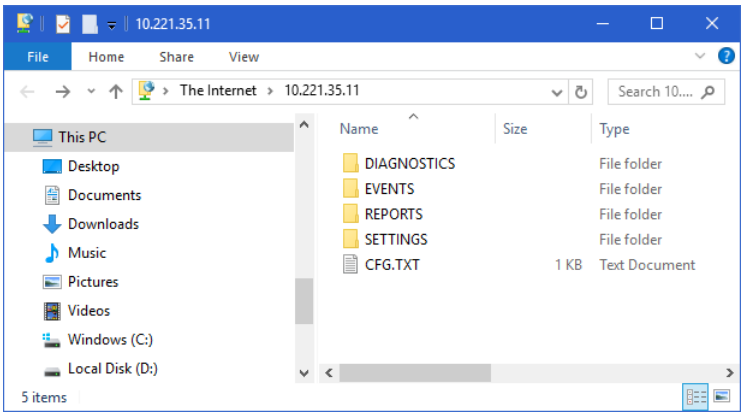

Figure 9.2 SEL-T400L Root Directory

The file structure in the SEL-T400L FTP session is organized as described in *DNP3 LAN/WAN Protocol on page 9.3*.

Telnet Protocol

Telnet is a terminal emulation protocol across a TCP/IP network. You can use SEL ASCII and SEL Compressed ASCII commands over Telnet (see *Appendix C: SEL ASCII Commands*).

The relay supports as many as three Telnet sessions and will deny any subsequent requests for additional sessions. You can use Telnet and FTP concurrently on Ethernet Port 5. You can use any compliant Telnet client with the SEL-T400L. You can initiate a Telnet session from QuickSet by clicking **Tools > Communication Parameters**, selecting **Network** from the **Active Connection Type** box, and entering the appropriate settings. Access the terminal window via the terminal icon on the menu bar or select the **QuickSet** window and press **<CTRL+T>**. To terminate a Telnet session, use the **EXI** command from any access level.

Table 9.4 shows the Telnet settings for Ethernet Port 5.

Table 9.4 Telnet Settings for Port 5

Name	Description	Range	Default
ETELNET	Enable Telnet	Y, N	N
MAXACC	Maximum access level	0, 1, B, 2	2
TPORT	Telnet port	23, 1025–65534	23
TCBAN	Telnet connect banner	ASCII string (maximum length of 20 characters)	TERMINAL SERVER
TIDLE	Telnet port time-out	1–30 minutes	15 minutes
AUTO	Send Automessage to port	Y, N	N

ETELNET

Enable (ETELNET = Y) or disable (ETELNET = N) the Telnet protocol on Ethernet Port 5. Verify that the port is enabled (EPORT = Y) and configured properly for use on your Ethernet LAN. See *Establishing Communication With an SEL-T400L Over Ethernet Port 5 on page 8.49* for instructions on how to configure Port 5. Issue the **PING** command from the computer to verify connection

of your Telnet client computer to the target relay. If you experience problems with the Telnet protocol, troubleshoot communications settings for your PC and the relay Port 5, the Telnet client configuration, and your network configuration.

MAXACC

Limit the maximum access level for Telnet sessions, even for users with privileges higher than what you set as MAXACC.

TPORT

Set the Telnet port for your Telnet sessions. Port 23 is typically used for this purpose.

TCBAN

Use the **TCBAN** setting to specify the connect banner. The relay responds with this banner upon initiation of the Telnet session. Consider using unique banners to ensure your Telnet client has accessed the correct relay.

TIDLE

Use the **TIDLE** setting to specify the time-out period for an inactive session. The relay terminates a Telnet session after the client is inactive for **TIDLE** time.

AUTO

Use **AUTO** to enable automatic messages on Port 5. With AUTO = Y, the SEL-T400L reports a message upon initiating a Telnet session, a diagnostic (self-test) failure, or an event trigger. For virtual (Telnet) ports/sessions, the relay issues automatic messages only if the connection is active. Automatic messages contain the following information:

- **Session Initiation:** Initiation of a Telnet session causes the relay to transmit a message providing common header information (including the Relay and Station ID, serial number, high-accuracy IRIG status, and the present date and time).
- **Diagnostic Failure:** When the relay detects an internal failure, the automatic message matches the relay response to the **STATUS** command.
- **Event:** When the relay triggers an event, the automatic message matches the relay response to the **SUMMARY** command.

You can use Telnet to work with files. See *FILE on page C.8* and *DNP3 LAN/WAN Protocol on page 9.3* for more information on how to use SEL ASCII commands to work with files.

Fast Time-Domain Values

The SEL-T400L streams voltages and currents sampled at 1 MHz in real time over the 1 Gbps Ethernet Port 5. These instantaneous values, called Fast Time-Domain Values (FTDV), are intended for advanced monitoring and research applications running on a receiving platform capable of matching the pace of data sent by the SEL-T400L. The data stream contains instantaneous samples of the six current channels and three voltage channels, along with the corresponding time stamps and scaling coefficients necessary to interpret the data. When the SEL-T400L is synchronized to an absolute time source (see *Appendix H: High-*

Accuracy Timekeeping), the FTDV time stamps are referenced to the absolute time. The SEL-T400L transmits sampled values in a 32-bit integer format with 18-bit resolution. The data stream uses about 310 Mbps of bandwidth and thus occupies about a third of the available 1 Gbps Port 5 bandwidth. The FTDV data streaming does not affect other Port 5 functions, but it may strain the external network that carries the Port 5 traffic. Make sure external network capacity and configuration are adequate before enabling the Port 5 data streaming function. The data stream contains UDP multicast/broadcast packets sent every 40 µs (i.e., at the 25 kHz rate) with each packet containing 40 one-microsecond sample sets.

Contact SEL to obtain detailed format description and tools to experiment with this advanced SEL-T400L functionality.

Table 9.5 shows the settings applicable to the Ethernet Port 5 data streaming function.

Table 9.5 Settings for FTDV Streaming

Name	Description	Range	Default
EFTDV	Enable Fast Time-Domain Values	Y, N	N
FTDVIPA	FTDV Multicast/Broadcast IP address	IP address w.x.y.z where: *w*: 224–239 (multicast), 255 (broadcast) *x*: 0–255 *y*: 0–255 *z*: 0–255	239.0.0.1
FTDVPORT	FTDV UDP port	1025–65534	50000
FTDVVLAN	FTDV VLAN ID	1–4094	1

EFTDV

Enable (EFTDV = Y) or disable (EFTDV = N) the Fast Time-Domain Values streaming protocol on Ethernet Port 5. Verify that the port is enabled (EFTDV = Y) and configured properly for use on your Ethernet LAN. Issue the **PING** command from the computer to verify connection of your FTDV client computer to the target relay. If you experience problems with the FTDV protocol streaming, troubleshoot the communications settings on your FTDV client computer.

FTDVIPA

Use the FTDVIPA setting to specify the multicast or broadcast IP address. The SEL-T400L sends the FTDV stream to either a multicast (first octet in the range of 224–239) or broadcast (first octet = 255) address, allowing multiple devices to receive the stream simultaneously.

FTDVPORT

Use the FTDVPORT setting to specify the UDP streaming protocol port. You can use any number in the range of 1025–65534. Be certain to configure the receiving device to listen on the same UDP port.

FTDVVLAN

Use the FTDVVLAN setting to specify the VLAN ID for the FTDV stream. VLAN tagging allows segregation of the time domain value stream from the rest of the network traffic. Use VLAN settings on your managed Ethernet switch to prevent the FTDV stream from reaching the unrelated network ports. You can use any number in the range of 1–4094 for the VLAN ID setting.

SEL Compressed ASCII Commands

SEL Compressed ASCII commands are a subset of SEL ASCII commands that result in the relay response in a comma-delimited format for ease of parsing by software (rather than messages formatted for human readability). SEL Compressed ASCII commands help machine clients in SCADA and HMI applications access relay data quickly and efficiently because SCADA and HMI software can parse and interpret comma-delimited messages without expending the customization and maintenance labor needed to interpret non-delimited messages formatted for human readability. Most spreadsheet and database programs can directly import comma-delimited files.

Responses to SEL Compressed ASCII commands include a checksum field. The relay calculates a checksum for each line by numerically summing all of the bytes that precede the checksum field in the message. The client software that uses the data can detect transmission errors in the message by summing the characters of the received message and comparing this sum to the received checksum.

Responses to SEL Compressed ASCII commands generally have fewer characters than conventional reports because the compressed reports reduce blanks, tabs, and other white space between data fields (typically used to ensure human readability) to a single comma.

Table 9.6 lists the Compressed ASCII commands and contents of the command responses. These commands are described in detail in *Commands for Machine Clients on page C.21*.

Table 9.6 SEL Compressed ASCII Commands

Command	Response	Access Level
BNAME	ASCII names of Fast Meter status bits	0
CASCII	Configuration data of all Compressed ASCII commands available at Access Level 1 and above	0
CHISTORY	List of events	1
CSTATUS	Self-diagnostic status	1
DNAME	ASCII names of digital I/O reported in Fast Meter	0
ID	Relay identification	0
SNS	ASCII names for SER data reported in Fast Meter	0

Relay Message Format in Response to SEL Compressed ASCII Commands

Each message begins with the start-of-transmission character, STX, and ends with the end-of-transmission character, ETX:

```
<STX><MESSAGE LINE 1><CR><LF>
<MESSAGE LINE 2><CR><LF>
...
<LAST MESSAGE LINE><CR><LF><ETX>
```

Each line in the message consists of one or more data fields, a checksum field, and a new line indication (<CR><LF>; carriage return and line feed). Commas separate adjacent fields. Each field is either a number or a string. Number fields contain base-10 numbers using the ASCII characters 0–9, plus (+), minus (–), and period (.). String fields begin and end with quote marks and contain standard ASCII characters. Hexadecimal numbers are contained in string fields.

The checksum consists of four ASCII characters that are the hexadecimal representation of the two-byte binary checksum. The checksum value is the sum of the first byte on a line (first byte following <STX>, <CR>, or <CR><LF>) through the comma preceding the checksum.

If you request data with an SEL Compressed ASCII command and these data are not available (such as in the case of an empty history buffer or invalid event request), the relay responds with the following SEL Compressed ASCII format message:

```
<STX>"No Data Available","0668"<CR><ETX>
```

where:

No Data Available	is a text string field.
0668	is the checksum field, which is a hexadecimal number represented by a character string.

CASCII Configuration Message for Compressed SEL ASCII Commands at Access Level 0

The SEL-T400L supports the **CASCII** (see *CASCII on page C.21*) command to allow automatic data extraction from messages responding to SEL Compressed ASCII commands. The relay responds to the **CASCII** command with a block of data for each of the Compressed ASCII commands it supports (**CHISTORY** and **CSTATUS** commands). The block of data for each supported command provides information allowing automatic data extraction from the message the relay sends in response to the command. Your SCADA and HMI client using SEL ASCII commands can issue the **CASCII** command to perform the following:

1. Identify or confirm the set of SEL Compressed ASCII commands that the SEL-T400L supports.
2. Learn how to parse and decode the SEL-T400L response to each of the supported SEL Compressed ASCII commands.

The relay arranges items in the SEL Compressed ASCII configuration message in a predefined order. For the purpose of improving products and services, SEL sometimes changes the items and item order. The information presented below explains the message and serves as a guide to the items in SEL Compressed ASCII configuration messages.

An SEL Compressed ASCII command can require multiple header and data configuration lines. The following is an example of the general format of an SEL Compressed ASCII configuration message:

```
<STX>"CAS",n,"yyyy"<CR><LF>
"COMMAND 1",ll,"yyyy"<CR><LF>
"#H","xxxxx","xxxxx",......,"xxxxx","yyyy"<CR><LF>
"#D","ddd","ddd","ddd","ddd",......,"ddd","yyyy"<CR><LF>
.
.
.
.
"COMMAND n",ll,"yyyy"<CR><LF>
"#H","xxxxx","xxxxx",......,"xxxxx","yyyy"<CR><LF>
"#D","ddd","ddd","ddd","ddd",......,"ddd","yyyy"<CR><LF><ETX>
```

where:

n is the number of SEL Compressed ASCII command descriptions to follow.

COMMAND is the ASCII name for the Compressed ASCII command that the relay supports. The naming convention for the Compressed ASCII commands is a C character preceding the typical command. For example, **CSTATUS**, abbreviated to **CST**, is the SEL Compressed ASCII **STATUS** command.

#H identifies a header line to precede one or more data lines in the relay response message; the # character represents the number of subsequent ASCII names. For example, 21H identifies a header line with 21 ASCII labels.

#D identifies a data line.

xxxxx is an ASCII name for corresponding data on following data lines in the relay response message. The maximum ASCII name length is 10 characters.

ddd identifies a format field containing one of the following type designators:

- I—Integer data
- F—Floating-point data
- *z*S—String of maximum *z* characters (for example, 10S indicates a 10-character string)

yyyy is the 4-byte hexadecimal ASCII representation of the checksum. A new line indication (<CR><LF>) follows every checksum.

Similar to the **CASCII** command, the **ID** command (see *ID on page C.22*) is used to extract identification information from the relay in compressed ASCII format. The following is an example of the general format of an SEL Compressed ID message:

```
"FID=SEL-T400L-Rnnn-Vx-Zsssppp-Dyyyymmdd","yyyy"
"BFID=SLBT-T400L-Rxxx-Vx-Zxxxxxx-Dxxxxxxxx","yyyy"
"CID=nnnn","yyyy"
"DEVID=CONAM, SID, RID","yyyy"
"DEVCODE=mm","yyyy"
"PARTNO=T400L#xxxx","yyyy"
"SERIALNO=xxxxxxxxxx","yyyy"
"CONFIG=abcdefg0","yyyy"
```

where:

FID is the firmware identification string for SEL devices (see *Table C.2 on page C.4* for further information).

BFID is the SELBOOT firmware identification string (see *SELBOOT on page A.7* for further information).

CID is the firmware file checksum (see *Table C.2 on page C.4* for further information).

DEVID is the device identifier specified by the CONAM, RID, and SID settings.

DEVCODE is a unique device code used for identification purposes.

PARTNO is the relay part number.

SERIALNO is the relay serial number.

CONFIG identifies a format field in which the designator positions (abcdefg) indicate a specific relay configuration as follows:

- a represents the nominal frequency, where 0 = N/A, 1 = 60 Hz, and 2 = 50 Hz.
- b represents the phase rotation, where 0 = N/A, 1 = ABC, and 2 = ACB.
- c represents the phase input current scaling, where 0 = N/A, 1 = 5 A, and 2 = 1 A.
- d represents the neutral input current scaling, where 0 = N/A, 1 = 5 A, and 2 = 1 A.
- e represents the voltage input connection, where 0 = N/A, 1 = Delta, and 2 = Wye.
- f represents the current input connection, where 0 = N/A, 1 = Delta, and 2 = Wye.
- g represents the date format, where 0 = MDY, 1 = YMD, and 2 = DMY.

Compressed Reports

The SEL-T400L supports two compressed ASCII reports, as indicated by the **CASCII** command response: the CHISTORY report and the CSTATUS report.

CHISTORY Report

The compressed history command, **CHISTORY** (see *CHISTORY on page C.21*), returns a compressed report containing the same information as the HISTORY report (see *HISTORY Report on page 5.13*). *Figure 9.3* shows a sample CHISTORY report, and *Table 9.7* describes the individual data items.

```
=>>CHI <Enter>
"RID","SID","FID","03E2"
"SEL-T400L","Station A","FID=SEL-T400L-R100-V0-Z001001-D20170321","0FEA"
"REF_NUM","YEAR","MONTH","DAY","HOUR","MIN","SEC","MSEC","USEC","EVENT","LOCATION",
   "CURR","FREQ","TARGETS","1995"
10245,2017,3,10,0,44,54,753,880,"ER",$$$$$$$,0,60.00,"","0A41"
10244,2017,3,9,22,17,6,99,611,"ER",$$$$$$$,0,60.00,"","09E4"
10243,2017,3,9,21,40,31,971,810,"ER",$$$$$$$,$$$$$,60.00,"","0AC0"
10242,2017,3,9,1,45,56,931,589,"ER",$$$$$$$,0,60.00,"","0A1E"
10241,2017,3,9,1,17,35,565,189,"ER",$$$$$$$,$$$$$,60.00,"","0A9C"
10240,2017,3,9,1,7,55,0,471,"ER",$$$$$$$,0,60.00,"","0972"
10239,2017,3,9,1,1,42,4,929,"ER",$$$$$$$,$$$$$,60.00,"","0A00"
```

Figure 9.3 Sample CHISTORY Report

Table 9.7 Information included in the CHISTORY Report

Data Item	Description	Comments
RID	Relay identifier specified by the RID setting	Refer to *Table C.2 on page C.4* for further information on each of these fields
SID	Station identifier specified by the SID setting	
FID	Firmware identification string for SEL devices	
REF_NUM	Unique event record number	Refer to *Table 5.5 on page 5.13* for further information on each of these fields
YEAR	Date and time of event capture	
MONTH		
DAY		
HOUR		
MIN		
SEC		
MSEC		
USEC		
EVENT	Indicates the mechanism that generated the event record	
LOCATION	Fault location result in units determined by the LLUNIT setting	
CURR	Maximum phase fault current measured during event	
FREQ	System frequency	
TARGETS	Protection element and scheme targets involved in the event	

CSTATUS Report

The compressed status command, **CSTATUS** (see *CSTATUS on page C.21*), returns a compressed status report containing information from extended diagnostic self-checks for detecting failures and out-of-tolerance conditions (see *Appendix F: Diagnostics* for additional information). *Figure 9.4* shows a sample CSTATUS report, and *Table 9.8* describes the individual diagnostic data items. The **Self-Test Description** column in *Table 9.8* references the column in *Table F.2 on page F.4* of the same name. Refer to *Table F.2 on page F.4* for recommended actions if one of the CSTATUS report self-test fields displays a warning or failure condition. Note that the CSTATUS report also contains the FID field, containing the firmware identification string of the relay (see *Table C.2 on page C.4* for additional information on the FID string), as well as the date and time that the CSTATUS report was generated (i.e., the MONTH, DAY, YEAR, HOUR, MIN, SEC, and MSEC fields).

```
=>>CST <Enter>
"FID","0143"
"FID=SEL-T400L-R100-V0-Z001001-D20170321","0932"
"MONTH","DAY","YEAR","HOUR","MIN","SEC","MSEC","0ACA"
3,10,2017,5,21,20,794,"0430"
"MB_PS","AI_PS","DC_OFFSET","SETTINGS","EEPROM","USB","SD_CARD","RAM","FLASH","DATA
    _ACQ","MB_PROC","MB_SOC","AI_FPGA","TEMP","RTC","
HMI","2192"
"OK","OK","OK","OK","OK","OK","OK","OK","OK","OK","OK","OK","OK",42.0,"OK","OK","10
    86"
```

Figure 9.4 Sample CSTATUS Report

Table 9.8 Diagnostic Information Included in the CSTATUS Report

Data Item	Self-Test	Possible Field Values	Self-Test Description
MB_PS	Main Board Power Supplies	OK, WARN, FAIL	Main Board Power Supply Out of Tolerance (WARN); Main Board Power Supply Failure (FAIL)
AI_PS	Analog Input Board Power Supplies	OK, WARN, FAIL	Analog Input Board Power Supply Out of Tolerance (WARN); Analog Input Board Power Supply Failure (FAIL)
DC_OFFSET	Current and Voltage Analog Channel DC Offset	OK, WARN	Current/Voltage Channel DC Offset Out of Tolerance (WARN)
SETTINGS	Board Settings	OK, WARN	Settings Failure (WARN)
EEPROM	EEPROM	OK, WARN, FAIL	EEPROM Warning (Invalid MAC address) (WARN); EEPROM Failure (FAIL)
USB	USB Controller	OK, FAIL	USB Failure (FAIL)
SD_CARD	SD Card	OK, WARN	SD Card Warning (WARN)
RAM	RAM	OK, FAIL	Random-Access Memory Failure (FAIL)
FLASH	FLASH	OK, WARN, FAIL	SELBOOT Checksum Warning (WARN); Checksum Failure (FAIL)
DATA_ACQ	Analog Input Board Data Acquisition System	OK, FAIL	Analog Input Board ADC Subsystem Failure (FAIL)
MB_PROC	Main Board Processor	OK, FAIL	Central Processor Failure (FAIL)
MB_SOC	Main Board SoC	OK, FAIL	Main Board Critical Single-Event Upset Detected (FAIL)
AI_FPGA	Analog Input Board FPGA	OK, FAIL	Analog Input Board Critical Single-Event Upset Detected (FAIL)
TEMP	Main Board temperature	Degrees Celsius (“W” appended if outside acceptable temperature range)	Main Board Temperature Warning
RTC	Real-Time Clock	OK, WARN	Real-Time Clock Warning (WARN)
HMI	HMI	OK, WARN	HMI Board Missing Warning (WARN)

Software Flow Control

Software handshaking is a form of flow control that two communicating devices use to prevent input buffer overflow and loss of characters. The relay uses XON and XOFF control characters to implement software flow control for SEL ASCII commands.

The relay transmits the XOFF character when the relay input buffer is more than 75 percent full. The connected device should monitor the data it receives for the XOFF character to prevent relay input buffer overflow. The external device should suspend transmission at the end of a message in progress when it receives the XOFF character. When the relay has processed the input buffer so that the buffer is less than 25 percent full, the relay transmits an XON character. The external device should resume normal transmission after receiving the XON character.

The relay also uses XON/XOFF flow control to pause data transmission to avoid overflow of the input buffer in a connected device. When the relay receives an XOFF character during transmission, it pauses transmission at the end of the message in progress. If there is no message in progress when the relay receives the XOFF character, it blocks transmission of any subsequent message. Normal transmission resumes after the relay receives an XON character.

SEL Fast Meter and SEL Fast SER Protocols

SEL Fast Meter is a communications protocol in the SEL-T400L that uses binary messages to provide responses to solicitations for metering information. In addition to solicited metering information, the relay can also send unsolicited SER data through use of the binary Fast SER protocol.

SEL-T400L interleaves SEL Fast Meter and SEL Fast SER messages with SEL ASCII command messages. The relay serves two separate data streams over the same port. Data communications with the relay consist of SEL ASCII commands and reports through use of a terminal or a terminal emulator with a human operator or a machine client sending commands and receiving relay responses. The binary data streams can interrupt the SEL ASCII data stream to obtain such time-sensitive information as metering or status data, and then allow the ASCII data stream to continue.

This mechanism allows use of a single communications channel for SEL ASCII command communications interleaved with short bursts of binary data to support fast acquisition of metering or status data (SEL Fast Meter and SEL Fast SER). The client software must support two separate data streams in order to use this feature. The binary commands and ASCII commands can also be accessed by a device that does not interleave the data streams. Real-time automation controllers, such as the SEL-3530 Real-Time Automation Controller (RTAC), use both binary messages and SEL ASCII commands to collect data from SEL relays for SCADA and HMI functions. SEL recommends using an SEL RTAC to collect Fast Meter and Fast SER data on Ethernet Port 5 over Telnet.

SEL Application Guide AG95-10, *Configuration and Fast Meter Messages*, available at selinc.com, provides a comprehensive description of the SEL binary messages.

This section summarizes the binary commands and messages supported by the SEL-T400L. SEL recommends using Fast Meter and SER Commands and Compressed ASCII configuration information to communicate with the relay. This information is necessary to develop or specify the software that an external device uses to communicate with the SEL-T400L through use of Fast Messages. To support this type of development, you will also need to contact SEL for Fast Message protocol details.

Table 9.9 lists the two-byte SEL Fast Meter commands and the actions the SEL-T400L takes in response to each command.

Table 9.9 SEL Fast Meter Binary Message List

Command (Hex)	Message Name	Device Response
A5B9	Status bits clear command	Device clears Fast Meter status byte and sends current status.
A5C0	Fast Meter definition	Device responds with available Fast Meter messages and general configuration information.
A5C1	Fast Meter configuration	Device responds with contents of Fast Meter data message.
A5D1	Fast Meter data	Device responds with present values of analog and digital data.

General Fast Messages have a two-byte identifier (A546h) and a function code. Fast SER messages are general Fast Messages that transport Sequential Events Recorder report information. The Fast SER messages include function codes to accomplish different tasks. *Table 9.10* lists the Fast SER function codes and the actions the SEL-T400L takes in response to each command.

Table 9.10 Fast Message Command Function Codes Used With Fast Messages (A546 Message) and Relay Response Descriptions

Function Code (Hex)	Function	Relay Action
00h	Fast Message definition block request	Relay transmits Fast Message definition request acknowledge (Function Code 80).
01h	Enable unsolicited transfers	Relay transmits Fast SER command acknowledged message (Function Code 81) and sets relay element bit FSER*x*. Relay will transmit subsequent SER events (Unsolicited SER broadcast, Function Code 18).
02h	Disable unsolicited transfers	Relay sends Fast SER command acknowledged message (Function Code 82) and clears relay element bit FSERP*x*. Relay will not transmit subsequent SER messages.
05h	Ping; determine channel is operable	Relay aborts unsolicited message in progress and transmits ping acknowledge message (Function Code 85).
98h	Fast SER message acknowledge	Relay completes dialog processing for unsolicited message sequence.
30h	Device description request	Relay sends summary of data blocks available (Function Code B0h).
31h	Data format request	Relay sends description of requested data block, including data labels and types (Function Code B1h).
33h	Bit label request	Relay sends set of bit labels for specific data item (Function Code B3h).
10h	Data request	Relay responds with set of requested data (Function Code 90h).

Recommended Use of Compressed ASCII and Fast Message Commands for Automatic Configuration

Compressed ASCII and Fast Message commands provide information that allows an external computer-based device to adapt to the messages (listed in *Table 9.11*) supported by the SEL-T400L. The SEL RTAC uses the self-description messages to configure a database and name the elements in that database.

Table 9.11 lists commands and command usage in the recommended order of execution for automatic configuration. See *Commands for Machine Clients on page C.21* for more information on the ASCII commands listed in *Table 9.11*.

Table 9.11 Commands in Recommended Sequence for Automatic Configuration

Command (ASCII or Hexadecimal [h suffix])	Response	Usage
ID	Relay identification	ID and FID
A5C0h	Relay Fast Meter definition block	Defines available Fast Meter messages and general relay configuration information
A5C1h, A5C2h, A5C3h	Fast Meter configuration blocks	Defines contents of Fast Meter data messages
BNA	Binary names	ASCII names of status bits
DNA X or **T**	Digital I/O names	ASCII names of digital I/O points
SNS	SER names	ASCII names for SER data points
CASCII	Compressed ASCII configuration block (Supports **CHISTORY** and **CSTATUS**)	Configuration data for Compressed ASCII commands with Access Levels 1 and above

SEL-T400L File Directories

The SEL-T400L works with a number of files organized in directories. These files include settings files, history and diagnostic reports, Sequential Events Recorder (SER) reports, and oscillography (event) files. You can browse and access these files through use of FTP or by using SEL ASCII commands in a terminal emulator on Port F or a Telnet client on Ethernet Port 5.

The SEL-T400L root directory contains a CFG.TXT file and four directories: SETTINGS, EVENTS, REPORTS, and DIAGNOSTICS.

The settings files and the CFG.TXT file use the System Data Format (SDF) file system unless otherwise specified. The files may contain keywords to aid file parsing. A keyword is defined as a string surrounded by the open and close bracket characters ([ ]), followed by a carriage return (<CR>) and line feed (<LF>). There can be only one keyword per line in the file. For example, the file would display the keyword INFO as follows: [INFO]<CR><LF>.

CFG.TXT File (Read-Only)

The CFG.TXT file contains general configuration information about the relay and each settings class. You may consider configuring SCADA/HMI software to retrieve the CFG.TXT file to determine the relay configuration before performing other operations.

Figure 9.5 shows a sample CFG.TXT file. Each line containing information on protection classes includes checksums for the data contained in that line.

```
[INFO]
RELAYTYPE=T400L
FID=SEL-T400L-R103-V0-Z004003-D20190215
BFID=SLBT-T400L-R100-V1-Z001001-D20170508
PARTNO=T400L#0001
[CLASSES]
"1","Protection Settings","\SETTINGS\SET_1.TXT","D821060B"
"D1","DNP Map Settings 1","\SETTINGS\SET_D1.TXT","49CD2E34"
"D2","DNP Map Settings 2","\SETTINGS\SET_D2.TXT","49CD2E34"
"D3","DNP Map Settings 3","\SETTINGS\SET_D3.TXT","49CD2E34"
"D4","DNP Map Settings 4","\SETTINGS\SET_D4.TXT","49CD2E34"
"D5","DNP Map Settings 5","\SETTINGS\SET_D5.TXT","49CD2E34"
"P1","Port 1","\SETTINGS\SET_P1.TXT","D44B5871"
"P2","Port 2","\SETTINGS\SET_P2.TXT","FE636013"
"P3","Port 3","\SETTINGS\SET_P3.TXT","801B28B5"
"PF","Front Panel Port F","\SETTINGS\SET_PF.TXT","55E6F678"
"P5","Ethernet Port 5","\SETTINGS\SET_P5.TXT","C78A372A"
"P6","Differential Port 6","\SETTINGS\SET_P6.TXT","94E9DA20"
"R","Reports","\SETTINGS\SET_R.TXT","40A46C3C"
[STORAGE]
```

Figure 9.5 Sample CFG.TXT File

SETTINGS Directory

You can access relay settings through a number of files in the SETTINGS directory. SEL strongly recommends that you use software specifically designed to manipulate SEL settings files (such as ACSELERATOR QuickSet SEL-5030 Software) rather than directly accessing or editing these text files. The relay only allows you to write to the individual SET_*cn* files, where *c* is the settings class code and *n* is the settings instance. Changing settings with software involves a number of steps, which you can have QuickSet perform for you. If, however, you choose to use your SCADA/HMI software for access to settings, note that the settings files are organized as shown in *Table 9.12*.

The SETTINGS directory contains the settings files shown in *Table 9.12*.

Table 9.12 SETTINGS Directory Files

File	Description
ERR.TXT	Report of the last settings write operation (read-only)
SET_ALL.TXT	All settings (read-only)
SET_1.TXT	Device/Protection settings
SET_D1.TXT	DNP Map Settings 1
SET_D2.TXT	DNP Map Settings 2
SET_D3.TXT	DNP Map Settings 3
SET_D4.TXT	DNP Map Settings 4
SET_D5.TXT	DNP Map Settings 5
SET_R.TXT	Recording settings (SER and Event Recorder)
SET_P1.TXT	Port 1 settings
SET_P2.TXT	Port 2 settings
SET_P3.TXT	Port 3 settings
SET_P5.TXT	Ethernet Port 5 settings
SET_P6.TXT	Direct point-to-point fiber-optic Port 6 settings
SET_PF.TXT	Front-panel USB Port F settings

See *Settings Structure on page 8.38* for more information on the organization of SEL-T400L settings.

SET_ALL.TXT File (Read-Only)

The SET_ALL.TXT file contains all relay settings. You can only read this file. Extract SET_ALL.TXT if you want to archive relay settings or inspect the relay settings. Do not modify the extracted SET_ALL.TXT file. You will not be able to save it back to the relay.

SET_*cn*.TXT Files (Read and Write)

The SETTINGS directory contains a file for each instance of each settings class. The settings class is designated by *c*, and the settings instance number by *n*. Read a file to archive and edit a given settings class and instance. Write back the file to modify relay settings for that class and instance. The relay processes the settings file immediately after it saves it; you do not need to issue any commands to prompt the relay to accept new settings.

ERR.TXT (Read-Only)

When you write a settings file, the relay checks the file format, settings ranges, and other settings rules. The ERR.TXT file reports errors (if any) for the last write operation for the settings file in the SETTINGS directory. If there were no errors, the ERR.TXT file still exists, but is empty.

EVENTS Directory

The relay stores history and compressed history reports, as well as oscillography files, in the EVENTS directory.

The HISTORY.TXT file contains event histories in an ASCII format (see *HISTORY on page C.8* and *Section 5: Fault and Event Recording* for more information). The CHISTORY.TXT file contains event history in an SEL Compressed ASCII format (see *CHISTORY on page C.21* and *SEL Compressed ASCII Commands on page 9.9* for more information).

The oscillography files are in the binary IEEE C37.111-2013 COMTRADE format. The high-resolution 10 kHz files are labeled as TDR, the ultra-high-resolution 1 MHz files are labeled as MHR, and the playback test files are labeled as TESTFILE*n* (where *n* = 1–5). These COMTRADE records comprise three individual files: a configuration file (CFG), a header file (HDR), and a data file (DAT). The header file for MHR and TDR records includes fault reports, settings, and other information you can use when analyzing an event. See *Section 5: Fault and Event Recording* for more information about relay records. See *Section 11: Testing and Commissioning* for more information about event playback testing and playback test files.

When using an FTP client, browse the EVENTS directory and copy files in which you are interested to your SCADA/HMI computer. When using SEL ASCII commands to interface with the relay, use the **FILE DIR EVENTS** command to display the contents of the EVENTS directory and the **FILE READ EVENTS *filename.**** command to copy files from the relay to your SCADA/HMI computer.

You cannot delete files in the EVENTS directory. You can, however, clear event reports by using the **HIS C** command. This command clears the history archive and deletes event reports in the relay. You can clear the playback test files by using the **PLAY C** command.

REPORTS Directory

Table 9.13 lists the files contained in the REPORTS directory. These files contain relay responses to the corresponding SEL ASCII commands. See *Section 5: Fault and Event Recording* for more information about the contents of these reports and how to interpret report data. See *Appendix C: SEL ASCII Commands* for more information about the commands that produce REPORTS directory files.

When you retrieve a file, the relay executes the corresponding command to produce the most recent report data, writes these data to the file, and provides the file to you.

When using an FTP client, browse the REPORTS directory and copy the files in which you are interested to your SCADA/HMI computer. When interfacing with the relay through use of SEL ASCII commands, use the **FILE DIR REPORTS** command to display the contents of the REPORTS directory and the **FILE READ REPORTS *filename.**** command to copy files from the relay to your SCADA/HMI computer.

You cannot delete files in the REPORTS directory. You can, however, clear these reports by using the **HIS C** command.

Table 9.13 REPORTS Directory Files

File	Description
HISTORY.TXT	Event history report (equivalent to the **HIS** command response)
LINEMON.TXT	Line monitoring report
MET.TXT	Instantaneous meter report (equivalent to the **MET** command response)
SER.TXT	Sequential Events Recorder report (equivalent to the **SER** command response)
TAR.TXT	Status of all the Relay Word bits (equivalent to the **TAR ROW LIST** command response)
CHISTORY.TXT	Compressed event history report (equivalent to the **CHI** command response)

DIAGNOSTICS Directory

The DIAGNOSTICS directory contains those files that are listed in *Table 9.14*. These files contain relay responses to the corresponding SEL ASCII commands. See *Appendix C: SEL ASCII Commands* for more information about the commands that produce reports (available as files) in the DIAGNOSTICS directory.

When you retrieve a file, the relay executes the corresponding command to produce the most recent report data, writes these data to the file, and provides the file to you.

When using an FTP client, browse the DIAGNOSTICS directory and copy the files of interest to your SCADA/HMI computer. When interfacing with the relay through use of SEL ASCII commands, use the **FILE DIR DIAGNOSTICS** command to display the contents of the DIAGNOSTICS directory and the **FILE READ DIAGNOSTICS *filename.**** command to copy files from the relay to your SCADA/HMI computer.

You cannot delete files in the DIAGNOSTICS directory.

Table 9.14 DIAGNOSTICS Directory Files

File	Description
STATUS.TXT	Status report (equivalent to the **STA** command response)
VEC_D.TXT	Diagnostics vector (equivalent to the **VEC D** command response)
VEC_E.TXT	Exceptions vector (equivalent to the **VEC E** command response)

Cybersecurity Features

The SEL-T400L contains a number of features to assist users with meeting their cybersecurity requirements. These features are as follows.

Electronic Access Control

The SEL-T400L has a number of mechanisms for managing electronic access. These include ways to limit access, provide user authentication, and monitor electronic and physical access.

Physical Port Controls

Each physical serial port and the Ethernet port can be individually disabled through use of the EPORT setting. By default, only the front-panel Port F is enabled. SEL recommends disabling ports that are not in use.

The SEL-T400L can limit the level of access on a port-by-port basis. Use the MAXACC setting to restrict the access levels at which each port is accessible. This permits you to operate under the principle of "least privilege"—restricting ports to only the levels needed for the functions performed on those ports.

Authentication and Authorization

⚠WARNING
This device is shipped with default passwords. Default passwords should be changed to private passwords at installation. Failure to change each default password to a private password may allow unauthorized access. SEL shall not be responsible for any damage resulting from unauthorized access.

The SEL-T400L supports five levels of access. Refer to *Access Levels on page 8.35* to learn which functions are allowed at each level, how each level is accessed, and what the default passwords are for each level. SEL recommends changing the default password of each access level to a unique password. The SEL-T400L supports strong passwords of as many as 12 characters, using any printable character, allowing users to select complex passwords if they so choose. SEL recommends that passwords contain a minimum of 8 characters containing at least one of each of the following: lowercase letter, uppercase letter, number, and special character.

TW test mode and the event playback function maintain security of in-service relays by requiring your testing and commissioning personnel to acknowledge the testing intent issued over the engineering port on the relay front panel, thus preventing an unintentional or malicious initiation of the test.

Monitoring and Logging

The SEL-T400L provides Relay Word bits that are useful for monitoring relay access, as shown in *Table 9.15*.

Table 9.15 Relay Word Bits for Monitoring Potential Cybersecurity Threats

Relay Word Bit	Description
ACCESS	Asserts when a user is logged in at Access Level B or higher
ACCESSP	Pulses for one second when any user increases their access level to 2 or higher
BADPASS	Pulses for approximately one second after entry of three successive bad passwords
PASNVAL	Pulses for one second when an incorrect password is entered when attempting to enter Access Level B or higher, or when changing passwords
LINK5	Port 5 valid link detected
SETCHG	Pulses for one second whenever settings are changed

These bits can be mapped for SCADA monitoring via SEL Fast Message or added to the SER log for later analysis. The SEL-T400L SER log is a useful tool for capturing a variety of relay events. In addition to capturing state changes of user-selected Relay Word bits, it captures all settings changes and all instances power was applied to the relay. See *Sequential Event Recording on page 5.18* for more information about SER.

Physical Access Control

Typically, SEL-T400L Relays are installed within a control house that provides physical security. Other times, they are installed in cabinets within the switch yard. For applications in the switch yard, you can monitor physical ingress by wiring a door sensor to one of the SEL-T400L contact inputs. This input can then be mapped for SCADA monitoring or added to the SER log so that you can monitor when physical access to the enclosure occurs.

Configuration Management

The SEL-T400L provides mechanisms for assisting users with the management of configuration data. As stated previously, all settings changes are logged to the SER log. Analysis of this log will let you determine if any unauthorized settings changes occurred.

The SEL-T400L also stores a hash code for each settings class in the CFG.TXT file. After configuring the device, you can read the CFG.TXT file and store it for future reference. You can then periodically read this file from the relay, extract the hash, and compare it to the stored reference. If any hash code has changed, you know that settings class has been modified. Use the **FILE READ CFG.TXT** command to download the CFG.TXT file (see *FILE on page C.8* for more information). *Figure 9.5* shows the contents of a sample CFG.TXT file. The hash code is the last eight digits on each line; for example, "9702B30D" is the hash code for the protection settings.

Firmware Hash Verification

SEL provides firmware hashes as an additional tool to verify the integrity of SEL firmware upgrade files. This helps ensure that the firmware you receive from the factory is complete and unaltered prior to your sending the firmware to the SEL device. Verify that the firmware file in your possession is a known good SEL firmware release by comparing the calculated hash value of the firmware in your

possession with the hash value provided at selinc.com/products/firmware/. See *Appendix B: Firmware Upgrade Instructions* for more information on how to verify firmware authenticity.

Malware Protection

The SEL-T400L has inherent and continuous monitoring for malware detection. For a full description, see selinc.com/mitigating_malware/.

Security Vulnerabilities

If SEL finds a security vulnerability with the SEL-T400L, users will receive disclosure of the issue through the standard SEL security notification process. For a full description of this process, see selinc.com/support/security-notifications/.

Erasing Private Data

SEL recommends erasing relay private data including passwords, settings, event history, SER data, and diagnostics from the relay memory when the relay is decommissioned. Perform the following procedure to erase all private data from an SEL-T400L:

Step 1. Go to Access Level C.

Step 2. Execute the **R_S** command.

Step 3. Allow the relay to restart.

IMPORTANT: Do not erase relay configuration or records when returning the SEL-T400L to SEL for investigation.

Once you complete these steps, all private data including passwords, event history, SER data, targets, settings, and disturbance diagnostics are erased and restored to factory-default values. Do not erase data before sending the relay to SEL for service. SEL needs to be able to see how the relay was configured in order to properly diagnose problems.

This page intentionally left blank

SECTION 10

Installation

This section describes installation features and installation requirements for the SEL-T400L Relay.

Consider the following when installing the SEL-T400L:

- *Environment and Mounting on page 10.1*
- *Connections on page 10.3*
- *Communications Interfaces on page 10.7*
- *AC/DC Connection Diagrams on page 10.17*
- *Accessing and Configuring Relay Jumpers on page 10.18*

This section also provides recommendations for *Inspecting the Relay on page 10.21*, *Cleaning Recommendations on page 10.25*, and *Replacing the Lithium Battery on page 10.25*.

Environment and Mounting

Relay Size

The SEL-T400L uses a horizontal, rack-mount 3U chassis, where one U is approximately 44.45 mm (1.75 in) high.

Physical Location

The SEL-T400L complies with Installation/Overvoltage Category III and Pollution Degree 2. This rating allows mounting of the relay indoors or in an outdoor enclosure where environmental conditions meet the ratings of the relay and the relay is protected against exposure to direct sunlight, precipitation, and full wind pressure.

The relay is rated for operating temperatures from –40° to +85°C (–40° to +185°F) and a maximum altitude of 2000 m (6560 ft) above mean sea level. For detailed environmental specifications, see *Environmental on page 1.14*.

Mounting

See *Figure 10.1* for exact mounting dimensions for the relay.

Use the reversible front flanges for either semiflush or projection mounting of the relay. Semiflush mounting results in a small panel protrusion from the relay rack rails of approximately 23.9 mm (0.94 in). Projection mounting places the relay front panel approximately 84.8 mm (3.34 in) past the relay rack rails. Use four screws of the appropriate size for your rack.

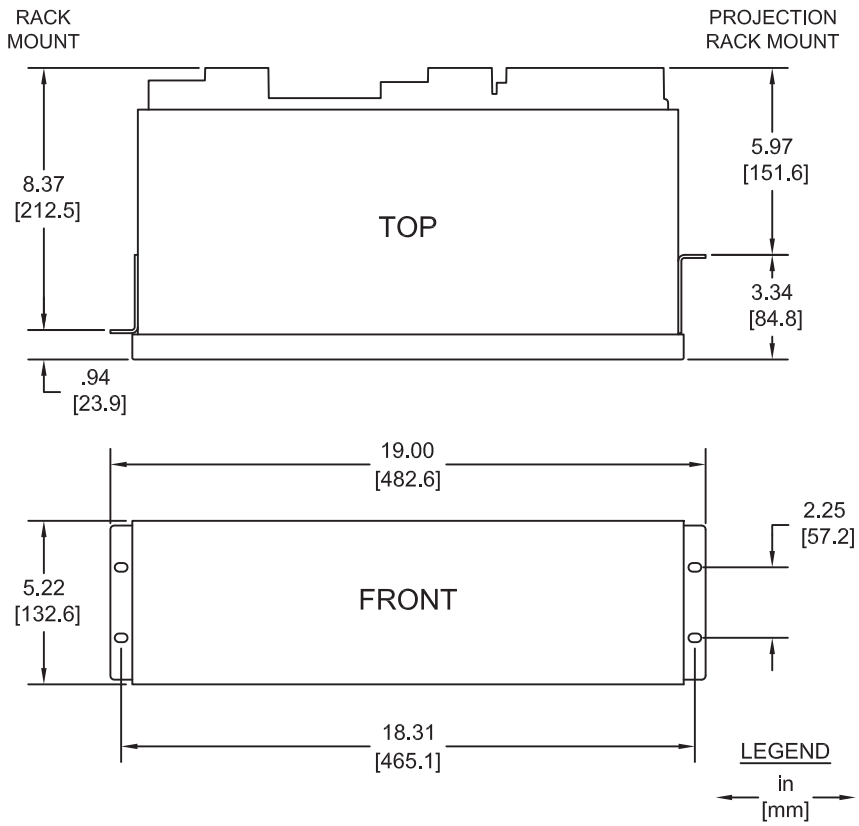

Figure 10.1 Chassis Dimensions

Figure 10.2 shows the front panel of the SEL-T400L. For more information about front-panel operations, see *Front-Panel Operations on page 8.4*.

Figure 10.2 Front Panel

Rear-Panel Layout

Figure 10.3 shows the rear panel of the SEL-T400L. The relay provides a terminal for grounding the chassis and a BNC IRIG-B connector, as well as terminals for the power supply, CTs and PTs, and contact I/O. It also includes the following communications ports: fiber-optic MIRRORED BITS Ports 1 through 3 for permissive overreaching transfer trip (POTT) and direct transfer trip (DTT) teleprotection applications and signaling with SEL devices, fiber-optic Ethernet Port 5 for engineering access and SCADA, and fiber-optic Port 6 for communication with a remote SEL-T400L Relay over a direct point-to-point fiber-optic channel (single form-factor pluggable transceiver ordered separately).

Figure 10.3 Rear Panel

Connections

Safety

Observe proper safety precautions when you connect the relay at terminals marked by the safety symbols shown in *Figure 10.4*. In particular, the danger symbol located on the rear panel corresponds to the following: *Contact with instrument terminals can cause electrical shock that can result in injury or death*. Ensure that you limit access to these terminals.

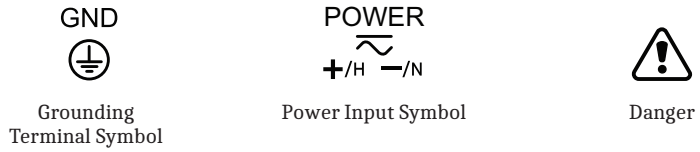

Figure 10.4 Rear-Panel Safety Symbols

Grounding

Connect the grounding (earthing) Terminal 25 (labeled **GND**; see *Figure 10.3*) to a rack frame ground or main station ground for proper safety and performance.

Use 4–6 mm^2 (12–10 AWG) wire less than 2 m (6.6 ft) long crimped to a green #8 hexagonal-head ground lug screw for this connection. This terminal connects directly to the internal chassis ground of the SEL-T400L.

Power Supply

Terminals 23 and 24, labeled **POWER**, must connect to a 125–250 Vdc or 110–240 Vac root-mean-square (rms) power source that matches the power supply range and ratings specified on the SEL-T400L rear-panel serial number label. *Figure 10.5* shows the terminals for the power supply connections. Note that only Terminals 23 and 24 are used for connecting power to the relay. Although Terminals 23 (**+/H**) and 24 (**−/N**) indicate polarity for convenience of troubleshooting wiring problems, the power supply is not polarity sensitive. The **POWER** terminals are isolated from chassis ground.

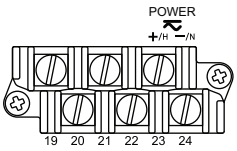

Figure 10.5 Terminals for the Power Supply Connections

Use 0.8–5.3 mm^2 (18–10 AWG) wire to connect direct current (dc) to the **POWER** terminals. Connection to external power must comply with IEC 60947-1 and IEC 60947-3. Place an external switch, circuit breaker, or overcurrent device in the SEL-T400L **POWER** leads to allow interruption of both the hot (**+/H**) and neutral (**–/N**) leads. The current rating for the power-disconnect circuit breaker or fuse must be 20 A maximum. *Table 10.1* shows the SEL-T400L internal power supply fuse information.

Table 10.1 Internal Power Supply Fuse Information

Rated Voltage	Operational Voltage Range	Fuse F1	Fuse Description
125–250 Vdc or 110–240 Vac	85–300 Vdc or 85–264 Vac (30–120 Hz)	T3.15AH250V	5x20 mm, time-lag, 3.15 A, high break capacity, 250 V

Secondary CT and PT Connections

The SEL-T400L has two sets of three-phase individually isolated current inputs and one set of three-phase voltage inputs with a common neutral, as shown in *Figure 10.6*. The alert symbol (⚠) on the rear panel indicates the need for proper safety precautions when working on secondary circuits connected to these terminals.

⚠DANGER
Contact with instrument terminals can cause electrical shock that can result in injury or death.

⚠WARNING
Before working on a CT circuit, first apply a short to the secondary winding of the CT.

Connect PT and CT inputs to the terminal blocks in the bottom row of the relay rear panel. Use 1.5–4 mm^2 (16–12 AWG) wire to connect the CT inputs and 0.8–2.5 mm^2 (18–14 AWG) wire to connect the PT inputs.

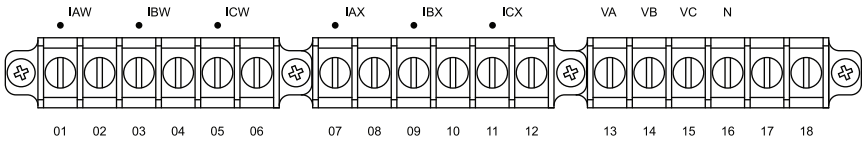

Figure 10.6 Terminal Blocks for PT and CT Inputs

Control Inputs

The SEL-T400L control inputs are fixed pickup threshold (see *Specifications on page 1.12* for more information), optoisolated control inputs (see *Figure 10.7*). Use these inputs to monitor power system equipment change-of-state conditions or the outputs of other devices.

The five inputs share Terminal A22 and are ground-isolated and polarity insensitive (the relay will detect input changes with voltage applied at either polarity). However, because of the common Terminal A22, connections on Terminals A17 through A21 must have the same polarity.

Nominal current drawn by these inputs is 3.3 mA at 125 Vdc. Input impedance is predominantly resistive, allowing a wide variety of control outputs to drive the inputs.

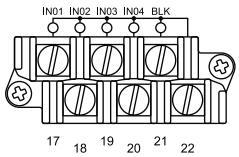

Figure 10.7 Terminal Blocks for Control Inputs

Inputs IN101 through IN104 can be assigned to existing functions such as event triggering, fault locator triggering, or for forcing three-pole trip in single-pole tripping applications. The BLK input has one specific application: when asserted, it blocks the relay trip outputs and forces the output MIRRORED BITS for POTT and DTT protection on Ports 1–3 and Port 6 (direct fiber-optic channel) to logical 0.

You must apply dc voltage to wet the control inputs.

Control Outputs

The SEL-T400L provides the following control outputs:

- Six high-speed, high-current interrupting (hybrid) Form A control outputs
- One Form C control output for alarm

High-Speed, High-Current Interrupting Tripping Outputs

Figure 10.8 shows terminals for the six high-speed, high-current interrupting tripping outputs and the Alarm output.

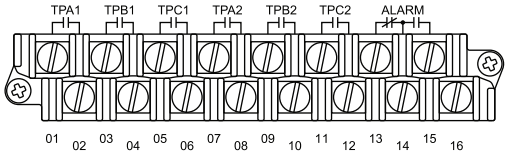

Figure 10.8 Terminal Blocks for Six High-Speed, High-Current Interrupting Form A Control Outputs, and One Alarm Form C Output Contact

All contact outputs have dedicated functions, as *Table 10.2* shows. Ensure, therefore, that you connect each particular control output only to its intended function.

In three-pole tripping applications, the SEL-T400L asserts all six tripping outputs simultaneously. You can use any of the six outputs to control three-phase-operated breaker(s).

Table 10.2 Function Assigned to Contact Outputs

Contact Output	Function
TPA1	A-Phase Trip Output 1
TPB1	B-Phase Trip Output 1
TPC1	C-Phase Trip Output 1
TPA2	A-Phase Trip Output 2
TPB2	B-Phase Trip Output 2
TPC2	C-Phase Trip Output 2
ALARM	Alarm Output (see *Appendix F: Diagnostics* for more information)

High-speed outputs are optimized for direct tripping of power circuit breakers. They operate in less than 10 µs, work with dc trip coil circuits, are polarity insensitive and capable of making 30 A, and can interrupt 10 A with an 8 ms dropout time. High-speed outputs are implemented as hybrid circuits, each of which consists of the parallel combination of a high-current, solid-state switch and an electromechanical bypass relay. SEL discourages using interposing relays with the SEL-T400L because the delay from such relays adds directly to the protection system trip time. Avoid using high-speed outputs to drive highly sensitive, high-input-resistance electronic inputs (e.g., <2 mA electronic circuits) unless such inputs are connected in parallel with a low-resistance load (e.g., a breaker trip coil). The minimum current requirement is especially important for low-power signaling circuits found on SONET/SDH multiplexers, power line carrier sets, and breaker failure and autoreclose initiation relay inputs.

Avoid connecting multiple high-speed outputs in parallel when driving highly sensitive electronic inputs. Keep wiring short, and use fiber-based MIRRORED BITS communications to bridge longer distances.

Alarm Output

The Alarm output contact uses a Form C configuration. Form C contacts share a common connection between normally closed (NC) and normally open (NO) contacts.

The SEL-T400L performs self-tests to monitor internal functions and hardware for out-of-tolerance conditions. If the relay detects an internal out-of-tolerance condition, the relay declares a Status Warning or a Status Failure condition and asserts Relay Word bit ALARM (see *Appendix F: Diagnostics* for more information). The Alarm output operates when the ALARM Relay Word bit asserts. To provide a remote alarm for the relay status that is independent of control power, connect the b contact of the Alarm output to your control system input. The relay also operates the Alarm output for non-failure conditions, such as when it enters a temporary state that warrants operator awareness, including TW test mode or playback test mode, or upon a failed password entry attempt. *Figure 10.9* shows the configuration of the a and b contacts in the control output Alarm.

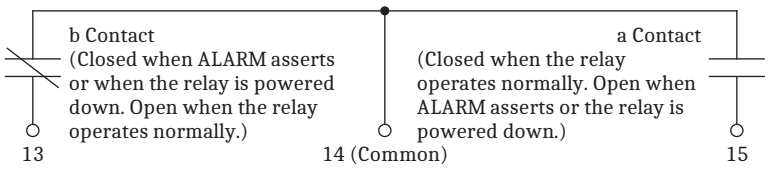

Figure 10.9 Alarm Contact Output and Terminal Assignments

Communications Interfaces

The SEL-T400L has several communications interfaces you can use for protection, SCADA, and engineering access. *Table 10.3* summarizes the communications ports and their applications.

Table 10.3 Communications Ports and Their Applications

Port	Application	Medium	Connectors
PORT 1	MIRRORED BITS communications	Fiber, multimode	ST, 62.5/125 µm, 820 nm
PORT 2	MIRRORED BITS communications	Fiber, multimode	ST, 62.5/125 µm, 820 nm
PORT 3	MIRRORED BITS communications	Fiber, multimode	ST, 62.5/125 µm, 820 nm
PORT F	Front port, local engineering access[a]	Copper	USB, Type B
PORT 5	Engineering access	Fiber (1 Gbps), multimode or single-mode[b]	LC (SFP)
PORT 6	Connection to a remote SEL-T400L (optional, used for the TW87, POTT, and DTT protection schemes and double-ended fault locating)	Fiber (1 Gbps), multimode or single-mode[b]	LC (SFP)

[a] Port F supports SEL ASCII (with Fast Meter) and File Transfer protocols.
[b] Depends on the cable length (see *Table 10.4* for more information).

Fiber-Optic MIRRORED BITS Ports

NOTE: On a per port basis, select either SEL MB8 encoding for signaling local SEL relays and SEL I/O devices or IEEE C37.94 encoding for signaling the remote SEL-T400L over compliant multiplexers. Use SEL MB8 encoding and a media converter to interface with multiplexers not compliant with IEEE C37.94. When using SEL MB8 encoding, select the baud rate on a per port basis. When using IEEE C37.94 encoding, the data rate is 1x64 kbps.

As shown in *Figure 10.10*, the relay provides three multimode rear-panel fiber-optic ports (**Port 1**, **Port 2**, and **Port 3**) with ST connectors. These three ports support multimode fiber-optic cables.

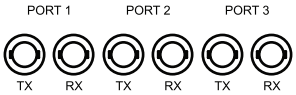

Figure 10.10 Multimode Fiber-Optic Ports With ST Connectors

These three ports support MIRRORED BITS communications with factory-assigned output MIRRORED BITS as shown in *Table 3.1*, *Table 3.2*, and *Table 3.3*. Use these ports to exchange POTT scheme, DTT scheme, and autoreclose control Relay Word bits with other devices through use of MIRRORED BITS.

Factory-programmed Relay Word bits (see *Figure 10.11*) drive all MIRRORED BITS on Ports 1–3. Transmission of these Relay Word bits occurs on a given port so long as that port is enabled (EPORT = Y). All received MIRRORED BITS in the SEL-T400L are available as Relay Word bits and you can use them in SEL-T400L logic if they are driven from appropriate conditions in the sending MIRRORED BITS-compliant relay. *Figure 10.11* illustrates the philosophy of using the SEL-T400L preprogrammed MIRRORED BITS in both the sending SEL-T400L and the receiving SEL-T400L. *Figure 10.12* illustrates use of the SEL-T400L in receiving bits from an SEL relay with programmable MIRRORED BITS.

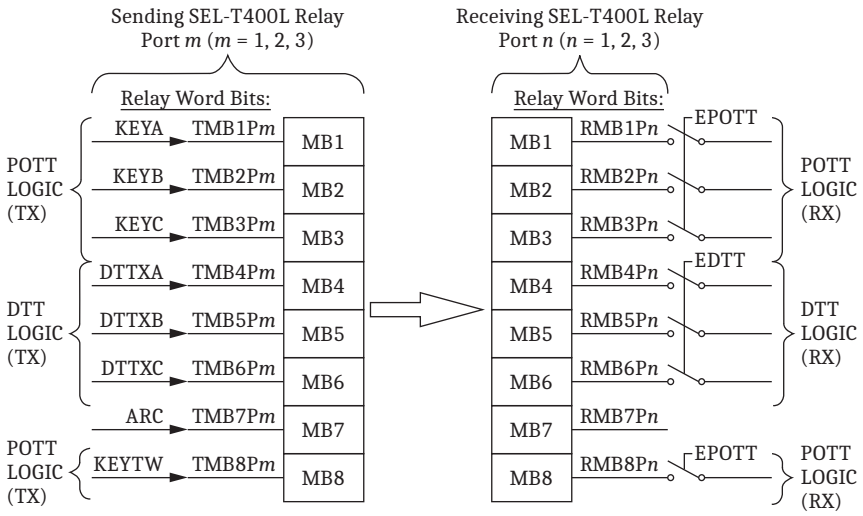

Figure 10.11 SEL-T400L Mirrored Bits Assignment and Usage Philosophy (SEL-T400L as a Sending and Receiving Relay)

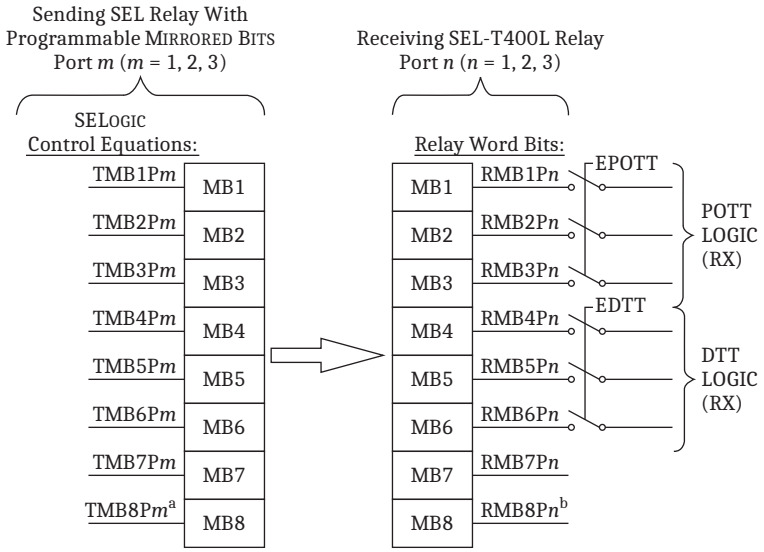

[a] Do not drive Bit 8 if ETW32 = Y in the SEL-T400L.
[b] Do not set ETW32 = Y in POTT scheme with relays other than the SEL-T400L.

Figure 10.12 SEL-T400L Mirrored Bits Assignment and Usage Philosophy (SEL-T400L Receiving Mirrored Bits From an SEL Relay With Programmable Mirrored Bits)

POTT and DTT communications-assisted protection schemes are the primary application for the Mirrored Bits ports of the SEL-T400L. In addition, an SEL-T400L may communicate with another device in the same station for functions such as initiation of breaker failure protection or autoreclosing. The following examples explain how to connect the SEL-T400L to other devices (see *Section 3: Protection Communications Channels* for more information).

SEL-T400L POTT and DTT Communication Over a SONET/SDH Multiplexer

SEL recommends using a digital teleprotection channel over SONET/SDH for POTT and DTT scheme applications. *Figure 10.13* shows an application using an SEL-8000 ICON multiplexer with an RJ45 copper Ethernet interface (if the

ICON in use has an IEEE C37.94-compliant interface, refer to *Figure 10.14*). This application requires an SEL-2814M Fiber-Optic Transceiver (male connection) to convert from fiber to copper and an SEL-C478A cable to convert the EIA-232 connection on the SEL-2814M to an RJ45 connection for connecting to the ICON. Set the DCE/DTE switch on the SEL-2814M to DCE. Because the ICON supplies power to the SEL-2814M, there is no need to connect an external power supply to the power input of the SEL-2814M. SEL-2814M transceivers should be located close to the multiplexer; i.e., the SEL-C478A cable should be as short as possible, with fiber optics constituting most of the distance between the SEL-T400L and the ICON.

Achieve low latency for permissive and direct trip signals by selecting the highest data rate (115200 bps) in the SEL-T400L and configuring the channel in the SONET/SDH system to support this data rate. For this application, configure the MIRRORED BITS port on each SEL-T400L for SEL MB8 encoding.

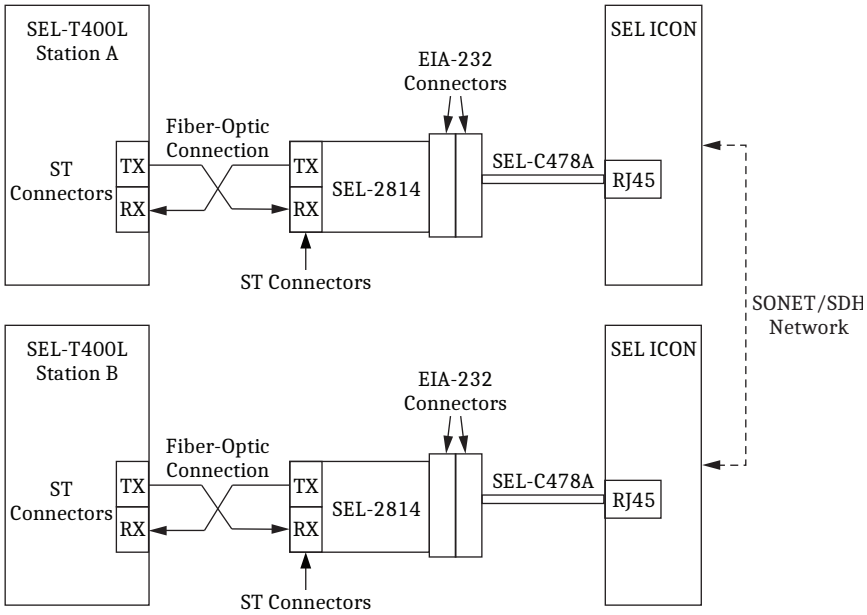

Figure 10.13 POTT and DTT Application Using SEL-8000 ICON Multiplexers

Figure 10.14 shows an application example using multiplexers that are compliant with IEEE C37.94. For this application, connect the SEL-T400L directly to the fiber-optic interface on the multiplexer. Configure the MIRRORED BITS port for IEEE C37.94 encoding and set the data clock to external on each SEL-T400L.

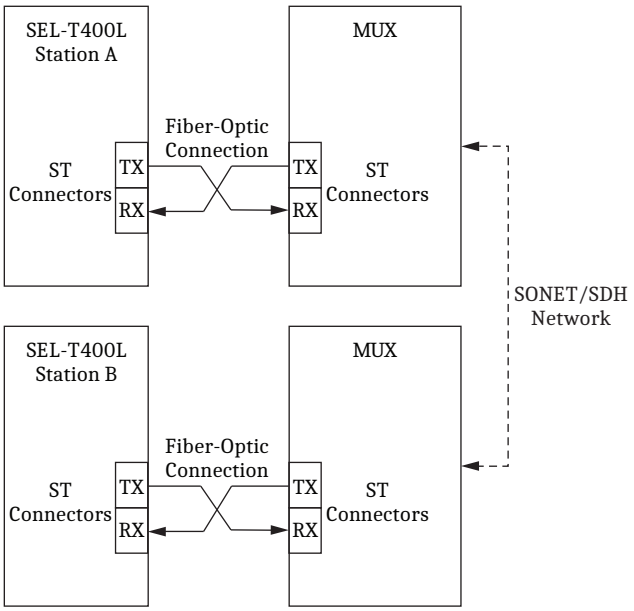

Figure 10.14 POTT and DTT Application Using IEEE C37.94-Compliant Multiplexers

Figure 10.15 shows an application example using generic multiplexers with DB-9 connectors. This application requires an SEL-2814 transceiver to convert the communications medium from fiber to copper. Make sure you order the correct SEL-2814 connector type (male or female) for connecting to the port on the multiplexer or the interface with the multiplexer. Set the DCE/DTE switch on the SEL-2814 in accordance with the requirements of the multiplexer. Because generic third-party multiplexers typically do not supply power to the SEL-2814, connect an external power supply to the power input of the SEL-2814.

Achieve low latency for permissive and direct trip signals by selecting the highest data rate (115200 bps) in the SEL-T400L and configuring the channel in the SONET/SDH system to support this data rate. For this application, configure the MIRRORED BITS port on each SEL-T400L for SEL MB8 encoding.

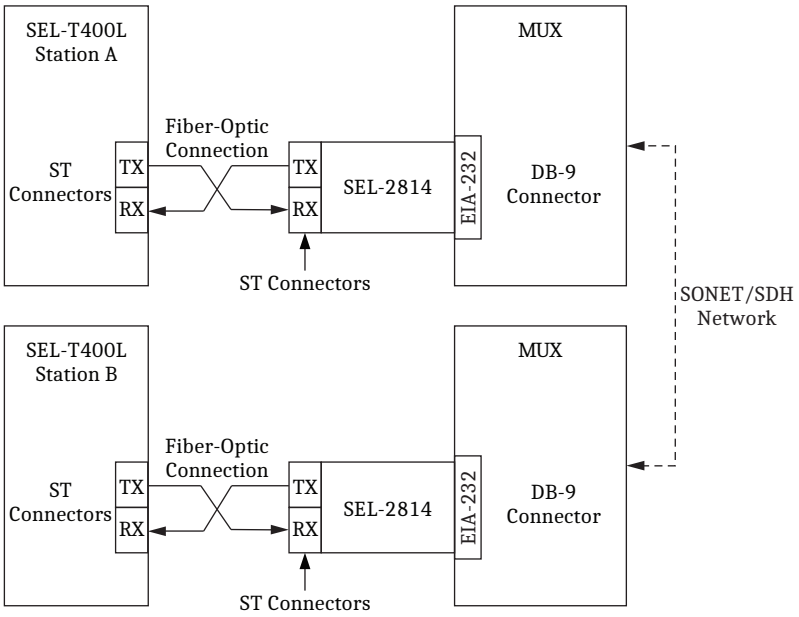

Figure 10.15 POTT and DTT Application Using Generic Multiplexers

SEL-T400L POTT and DTT Communication Over Power Line Carrier

Apply an SEL-T400L with power line carrier (PLC) or any teleprotection equipment with an I/O contact interface, such as a teleprotection card in a SONET/SDH multiplexer. In this case, convert the MIRRORED BITS into contact inputs and outputs through use of an SEL Remote I/O Module such as the SEL-2507, and hardwire the appropriate I/O contacts between the PLC and the SEL-2507. The SEL-T400L uses phase-segregated permissive and direct trips. For best performance in single-pole tripping applications, you should use three permissive and three direct transfer trip bits. Refer to *Section 3: Protection Communications Channels* for more information. For this application, configure the MIRRORED BITS port on each SEL-T400L for SEL MB8 encoding.

Figure 10.16 shows an example of how to use I/O contacts in connecting the SEL-T400L in the circuit for a PLC-based, communications-assisted scheme. You will also have to set a number of SEL-2507 settings depending on the application. The SEL-2507 uses a ten-position control (DIP) switch to set the transmit (TX) and receive (RX) addresses to match the SEL-T400L port settings for determination of the number of received consecutive messages for output contact control and programming of the MIRRORED BITS communications data rate. See the *SEL-2507 Instruction Manual* for more information.

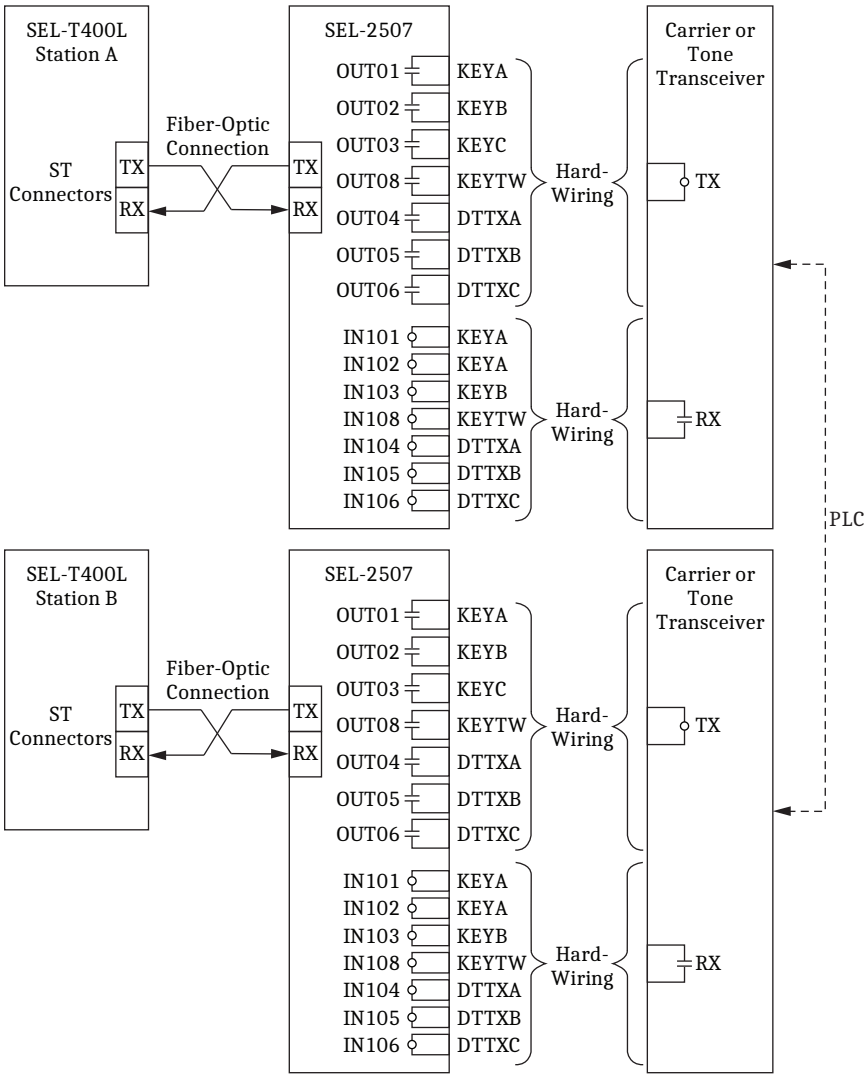

Figure 10.16 POTT and DTT Application Using Power Line Carrier

The specific hardwiring between the SEL-2507 and the PLCs depends on the number of permissive and direct trips you effectively use and the transmit/receive requirements of the carrier equipment.

Follow both the SEL-2507 and the carrier set wiring recommendations. Apply best practices for wiring the electrical connections (such as shielding and grounding) between the SEL-2507 and the carrier equipment to avoid spurious pickup of the SEL-2507 inputs and the carrier inputs resulting from noise or interference. For the highest noise immunity, use direct point-to-point wiring and locate the SEL-2507 in the immediate vicinity of the carrier equipment. Ensure that overly sensitive inputs (i.e., <2 mA) have additional load (e.g., a 33 kΩ, 5 W resistor) connected in parallel.

SEL-T400L Connection With Local Protection Devices Over Mirrored Bits Ports

SEL recommends using direct Mirrored Bits communications when connecting with local protection devices. Connect an SEL-T400L to a Mirrored Bits-compatible device for applications such as breaker failure initiation, autoreclose initiation, cross-triggering of recording functions, triggering the SEL-T400L fault locator or event recorder, etc. (Refer to *Table 3.1* when configuring the local protection device.) When connecting an SEL-T400L to another SEL device with EIA-232 ports, use the SEL-2814M Fiber-Optic Transceiver (male connection) to convert the communications medium from fiber to copper, as shown in *Figure 10.17*. Set the DCE/DTE switch on the SEL-2814M to DCE. The other SEL device usually provides power to the SEL-2814M via the connector. If this is not the case, connect an external power supply to the power input of the SEL-2814M.

The SEL-T400L allows SEL MB8 encoding (see *Mirrored Bits Communications on page 3.5* for more information) to ensure compatibility with all other SEL products. Because SEL relays do not detect the communications data rate of the Mirrored Bits, be sure to match the Mirrored Bits data rate in both relays. The maximum Mirrored Bits communications data rate differs among SEL products. For optimal performance, always set the Mirrored Bits communications data rate to the maximum rate available between the two devices. For this application, configure the Mirrored Bits port on the SEL-T400L for SEL MB8 encoding.

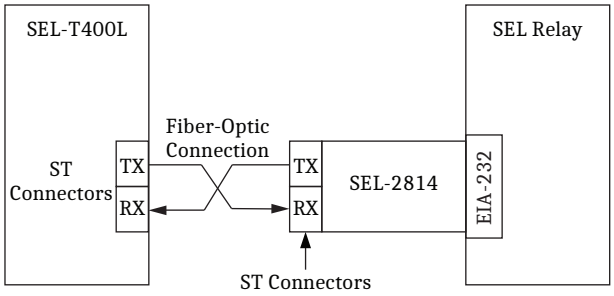

Figure 10.17 Communication With a Mirrored Bits-Compatible Protection Device

SEL-T400L Connection With Local Protection Devices Over Contact I/O

Figure 10.18 shows the case where the SEL-T400L connects to a local device that is incompatible with the Mirrored Bits communications protocol. In this case, convert the Mirrored Bits into contact inputs and outputs through use of SEL Remote I/O modules such as the SEL-2507, and hardwire the appropriate

I/O contacts between the end device and the SEL-2507. (Refer to *Table 3.1* when configuring the local protection device.) For this application, configure the MIRRORED BITS port on the SEL-T400L for SEL MB8 encoding.

Follow both the SEL-2507 and the local device wiring recommendations. Apply best practices for wiring the electrical connections between the SEL-2507 and the relay to avoid spurious pickup of the SEL-2507 inputs and the device inputs resulting from noise or interference. For the highest noise immunity, use direct point-to-point wiring and locate the SEL-2507 in the immediate vicinity of the other protection device. Ensure that overly sensitive inputs (i.e., <2 mA) have additional load (e.g., a 33 kΩ, 5 W resistor) connected in parallel and avoid driving a single contact input with more than two high-speed hybrid contact outputs connected in parallel. SEL relay inputs consume more than 2 mA and can be driven directly.

Use the SEL-2505 for applications in which electromechanical outputs may be preferred.

You must also set a number of SEL-2507 settings depending on the application. The SEL-2507 uses a ten-position control (DIP) switch to set the TX and RX addresses to match the SEL-T400L port settings for determination of the number of received consecutive messages for output contact control and programming the MIRRORED BITS communications data rate. See the *SEL-2507 Instruction Manual* for more information.

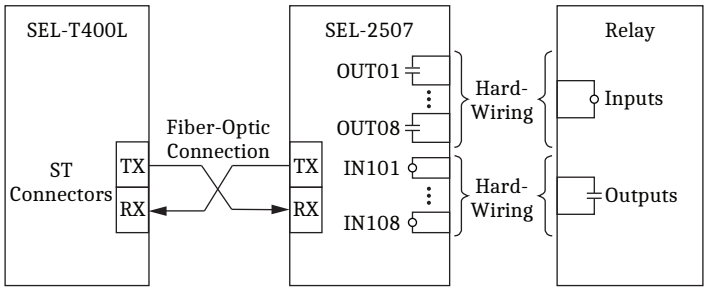

Figure 10.18 Communication With a Generic Protection Device Using Contact I/Os

Fiber-Optic Small Form-Factor Pluggable Ports

The SEL-T400L has two fiber-optic small form-factor pluggable (SFP) ports with LC connectors, as shown in *Figure 10.19*. Port 5 provides access to Ethernet networking functions including TCP/IP, FTP, and Telnet over local-area and wide-area networks. Use Port 6 to connect to a remote SEL-T400L for TW87, POTT, and DTT protection schemes, double-ended fault locating, and remote metering.

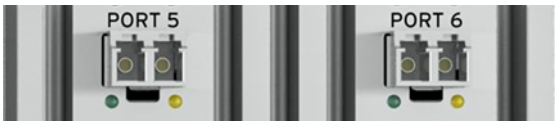

Figure 10.19 Ports 5 and 6 With SFP Transceivers Installed

Selecting SFP Transceivers

When you order your SEL-T400L, Port 5 includes an 850 nm 1000BASE-SX SFP transceiver optimized for local multimode fiber-optic Ethernet links within the control house building. The maximum distance achievable with this type of

transceiver is either 300 m (984 ft) or 550 m (1804 ft), as shown in *Table 10.4*. If your application requires longer distances or single-mode fiber-optic support, order the appropriate SFP separately, and install the SFP following SEL-recommended steps.

Select a Port 6 transceiver based on the distance and fiber losses as explained in *Selecting Port 6 SFP Transceivers on page 3.18*.

Table 10.4 Ports 5 and 6 Transceivers Distance and Recommended Cable Type

Transceiver Part Number	Standard	Fiber	Max. Distance	Wavelength	Link Budget
8131-01	1000BASE-SX	MMF[a]	300 m (62.5/125 µm) 550 m (50/125 µm)	850 nm	9 dB
8130-01	1000BASE-LX	SMF[b]	10 km	1310 nm	11.5 dB
8130-02	1000BASE-LX	SMF	20 km	1310 nm	16 dB
8130-03	1000BASE-LX	SMF	30 km	1310 nm	19 dB
8130-04	1000BASE-LX	SMF	40 km	1310 nm	22 dB
8130-05	1000BASE-XD	SMF	50 km	1550 nm	19 dB
8130-06	1000BASE-ZX	SMF	80 km	1550 nm	24 dB
8130-08	1000BASE-ZX	SMF	160 km	1550 nm	37 dB
8130-10	1000BASE-ZX	SMF	200 km	1550 nm	41 dB

[a] MMF = multimode fiber.
[b] SMF = single-mode fiber.

Installing and Replacing SFP Transceivers

Although SFP transceivers are hot-swappable, you may consider taking the relay out of service before installing or changing the SFP.

SFPs include a rubber plug to protect the electronics inside the port, as shown in *Figure 10.20(a)*. Ensure that the plug is present whenever the port is not in use. Attempting to clean the port may result in component damage. For the same reason, be sure to first clean the LC cable connector before inserting the connector into the SFP receptacle. *Figure 10.20(b)* shows an SFP with the plug inserted to properly cover the port.

(a) (b)

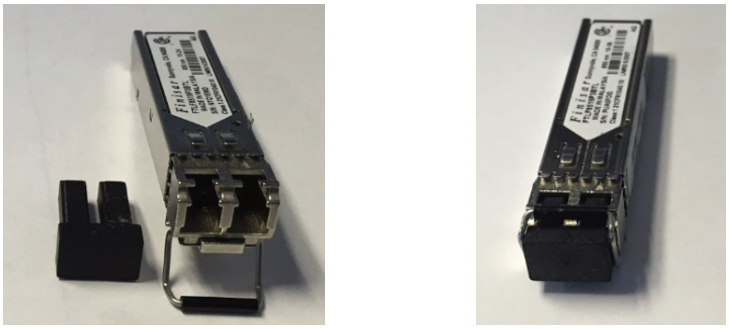

Figure 10.20 (a) SFP Without Plug, and (b) SFP With Plug Inserted

Figure 10.20(a) also shows a lever that provides a mechanism by which you can hold the SFP when removing it from the relay. Removing the SFP from the relay without using this lever may result in damage to the SFP.

Figure 10.21(a) shows an SFP that is about to be inserted into the Port 6 receptacle. To install the SFP, gently push the SFP into the receptacle until fully inserted, as *Figure 10.21(b)* shows. When fully inserted, the SFP latches into position.

Figure 10.21(b) shows the installed SFP with the lever in the closed position and the rubber plug inserted. To insert the fiber-optic cable, leave the lever in the closed position but remove the rubber plug, as shown in *Figure 10.21(c)*.

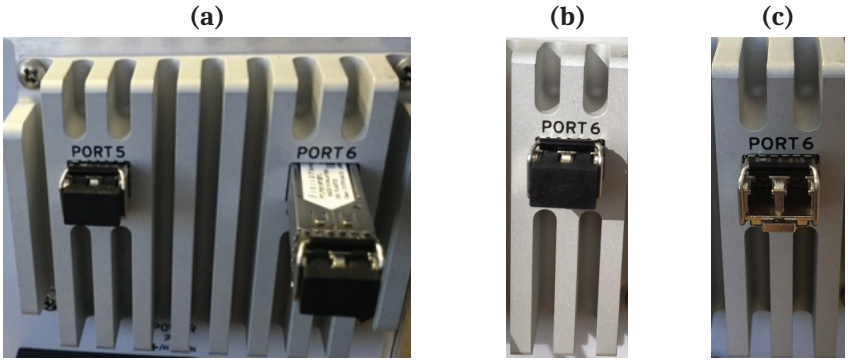

Figure 10.21 (a) SFP About to be Inserted, (b) Installed SFP, and (c) Ready for Cable

Figure 10.22 shows a fiber-optic cable with LC connectors. You can specify the type of fiber-optic cable, but always use LC connectors.

Figure 10.22 Fiber-Optic Cable With LC Connectors

Carefully insert the LC connectors into the SFP receptacles and gently push until the connectors latch, as shown in *Figure 10.23(a)*.

To remove the SFP, first remove the fiber-optic cable and then move the lever to the open position, as shown in *Figure 10.23(b)*. Grip the lever and gently pull the SFP from the receptacle.

Figure 10.23 (a) Properly Inserted Cable, and (b) Ready to Remove SFP

Working With Fiber-Optic Ports

⚠WARNING
Do not look into the fiber ports/connectors.

⚠WARNING
Do not look into the end of an optical cable connected to an optical output.

⚠CAUTION
Class 1 LASER Product. This product uses visible or invisible LASERs based on model option. Looking into optical connections, fiber ends, or bulkhead connections can result in hazardous radiation exposure.

Observe the following safety precautions when working with fiber-optic transceivers, patch cords, patch panels, and cables:

- ➤ Do not look into the fiber (laser) ports/connectors.
- ➤ Do not look into the end of an optical cable connected to an optical output.
- ➤ During installation, maintenance, or testing of the optical ports, use only test equipment qualified for Class 1 LASER products.
- ➤ Incorporated components, such as transceivers and laser emitters, are not user-serviceable. Return units (SEL-T400L or SFP transceiver) to SEL for repair or replacement.
- ➤ Do not perform any procedures or adjustments that this instruction manual does not describe.

When selecting and installing fiber-optic cables, pay attention to the recommendation from the fiber-optic cable manufacturer for installation details such as operating temperature, bend radius, mechanical strain, cable attenuation, and cable terminations.

For more information about installation details when using SEL fiber-optic cables, refer to the *Fiber-Optic Products and Applications* data sheet, available at selinc.com.

IRIG-B Input Connection

NOTE: IRIG-B004 is a time format that replaces and is backward compatible with IRIG-B000.

Figure 10.24 shows the BNC connector for the IRIG-B timing input of the relay. The SEL-T400L IRIG-B input works with demodulated, high-accuracy signals with either odd or even parity that are compatible with IEEE C37.118 with control bit extensions (IRIG-B004).

Figure 10.24 BNC Connector

For the best Sequential Events Records (SER) and event report time-stamp accuracy, use an IRIG-B source with 10 ms edge time jitter less than ±0.5 µs, such as a GPS satellite clock. The SEL-T400L does not require the external time (provided by the IRIG-B input) for either protection or fault locating.

Figure 10.25 shows a typical IRIG-B signal distribution chain, including a recommended 50-ohm terminating resistor.

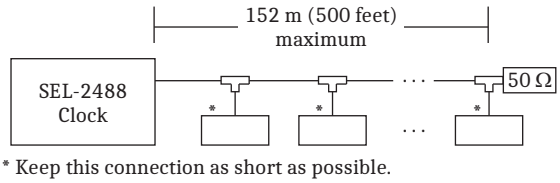

Figure 10.25 Typical IRIG-B Application Example

Note that the coaxial cable connecting signal distribution chain components causes a delay of 5.05 ns/m (1.54 ns/ft). Therefore, for the maximum length of 152 m (500 ft), the coaxial cable causes a delay of 0.77 µs between the clock and

the last relay in the chain. Furthermore, the cable between the GPS antenna and the clock also adds to the IRIG-B signal delay (unless the clock compensates for this delay).

For best results, place the SEL-T400L close to the clock and make proper use of cable-delay compensation settings available in most clocks. Whenever possible, use a direct IRIG-B connection or minimize the number of relays sharing the SEL-T400L coaxial cable feed. Always use high-quality 50-ohm impedance coaxial cable (e.g., RG-58 or better).

For safety purposes, ground the shield of the coaxial cable at a single location (preferably at or in the immediate vicinity of the clock).

AC/DC Connection Diagrams

You can apply the SEL-T400L to several typical line terminations and bus arrangements.

Figure 10.26 shows an application for a single circuit breaker line termination with line CTs. *Figure 10.27* depicts typical connections for a dual circuit breaker line termination with breaker bushing CTs.

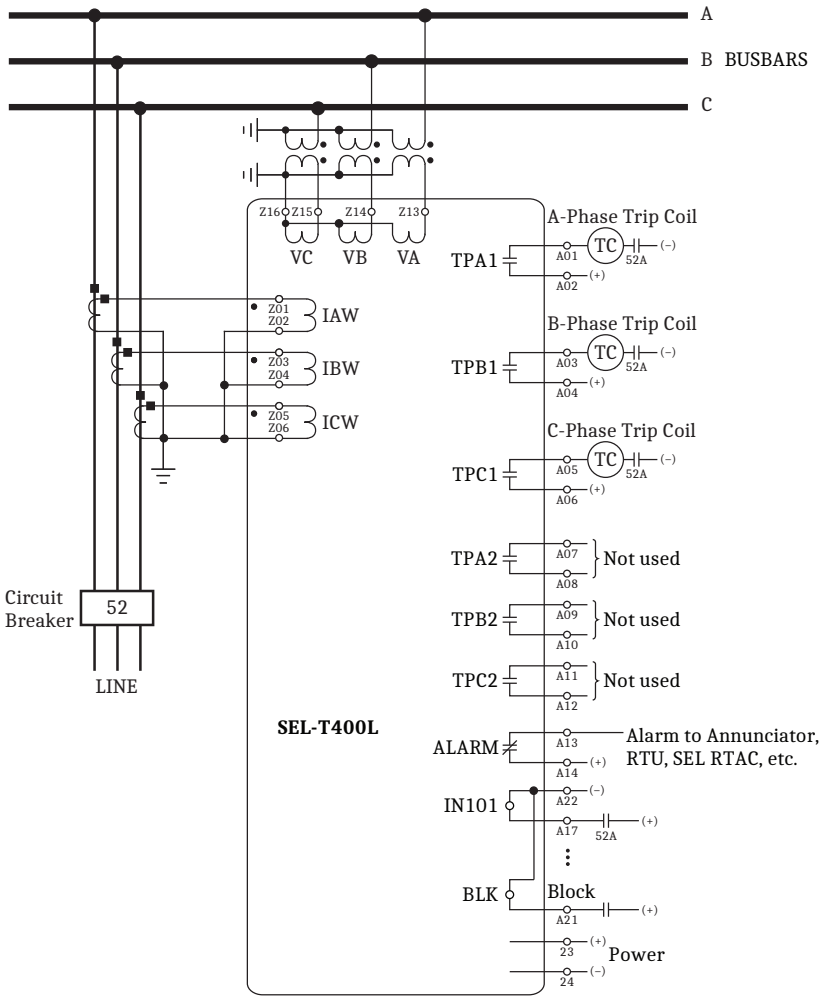

Figure 10.26 Typical AC/DC Connections—Single Circuit Breaker Line Termination

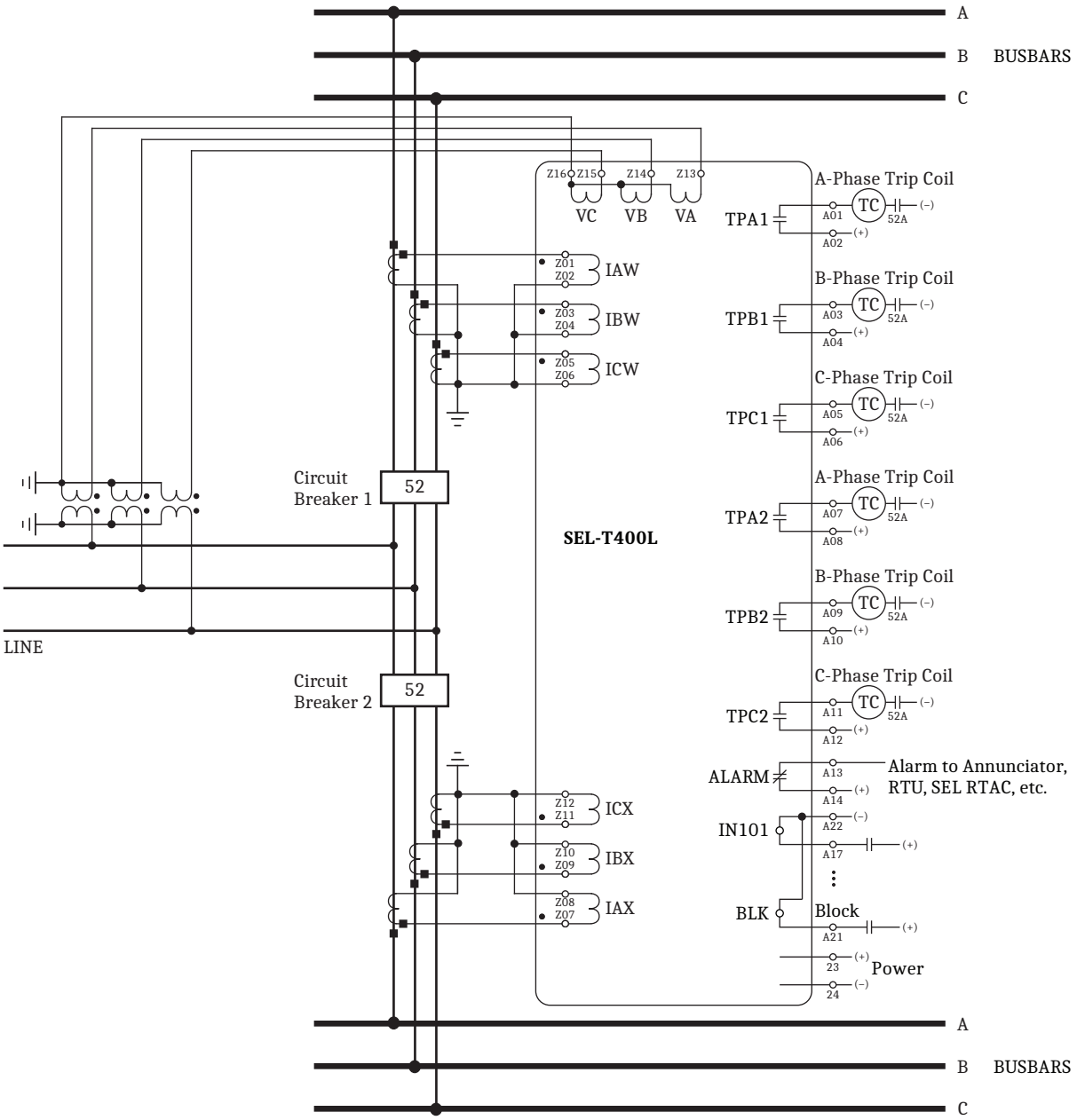

Figure 10.27 Typical AC/DC Connections—Double Circuit Breaker Line Termination

Accessing and Configuring Relay Jumpers

The SEL-T400L provides two jumpers located inside the chassis on the top printed circuit board that perform the following functions when the pins are shorted:

- Disable password protection (all access levels)
- Allow testing relay outputs with the **PULSE** command

SEL relay documentation refers to these two jumpers as PASSWORD and BREAKER, respectively.

You can access the two jumpers without removing the relay from the relay cabinet or the top printed circuit board from the chassis. Refer to *Figure 10.2* and loosen the four screws that secure the front panel to the chassis. Follow your company's electrostatic discharge (ESD) precautions for working with electronic equipment and remove the SEL-T400L front panel to access the jumpers. Keep in mind, the front-panel assembly is connected to the top printed circuit board with a cable, and use care when you detach the front-panel assembly so that you do not stress the connectors of that cable. *Figure 10.28* shows the location of the jumper header on the SEL-T400L top printed circuit board. The jumper header is located on the front of the board, immediately to the right of the power connector when looking at the front of the relay with the front cover removed (see *Figure 10.29*).

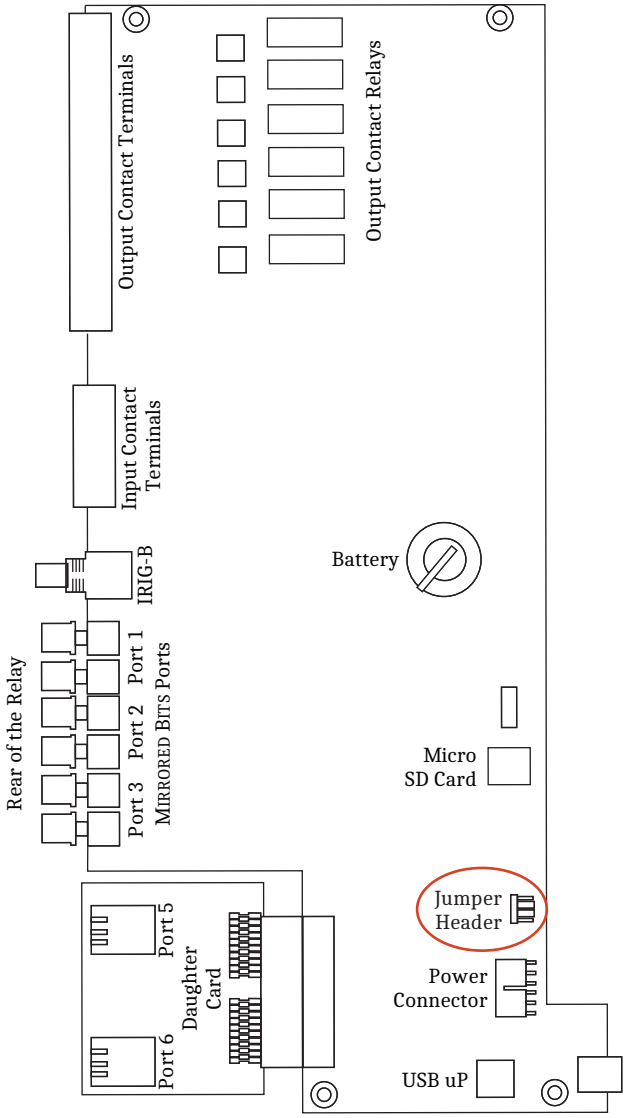

Figure 10.28 Location of the Jumper Header on the SEL-T400L Top Printed Circuit Board (Top View)

The jumper header has four sets of pin pairs. The upper pin and the lower pin make up a control point or position. Each position can be left open or shorted with a jumper. The positions on the left and right (labeled D and A, respectively) are for SEL use only. These should remain open at all times. The second position from the left is the BREAKER position. The third position from the left is the PASSWORD position.

The relay ships with two jumpers that you can use to control testing with the **PULSE** command and to disable password protection. As shipped, the jumpers are attached to the upper pins in the BREAKER and PASSWORD positions of the header (the upper pin acts as a jumper storage means). Attached only to the upper pin, the jumper does not short the two pins (pins are open). You can pull the jumper toward you and insert it back to short the two pins.

The relay ships with the BREAKER and PASSWORD pins open. Should the shorting jumpers be removed or lost, the relay will fail safe, preventing the use of the **PULSE** command to test the relay outputs and requiring passwords for access.

Refer to *Table 10.5* for jumper functions and to *Figure 10.29* for jumper header position designations.

Table 10.5 BREAKER and PASSWORD Jumpers

Position	Jumper Placement	Function
A	None[a] (pins open)	Reserved for SEL use only
BREAKER	Upper[a] (pins open)	PULSE command disabled
	Lower (pins shorted)	PULSE command allowed (testing)
PASSWORD	Upper[a] (pins open)	Password required
	Lower (pins shorted)	Password protection disabled (temporary or emergency use)
D	None[a] (pins open)	Reserved for SEL use only

[a] Default shipping placement.

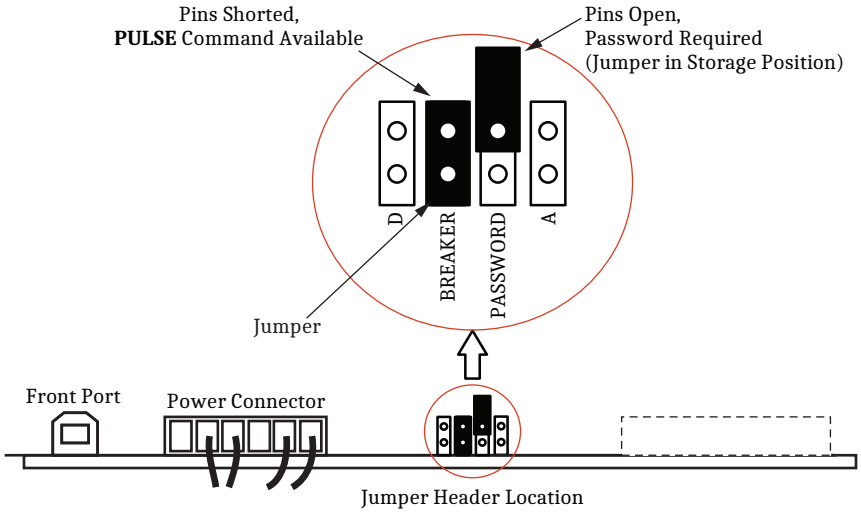

Figure 10.29 Jumper Header Location on the Top Printed Circuit Board (Front View) and BREAKER and PASSWORD Jumper Positions in the Jumper Header

NOTE: If you leave the BREAKER jumper shorting the pins in your in-service relays, ensure your testing and commissioning procedure requires your field personnel to isolate the control outputs before testing.

NOTE: Under no circumstance should you put the PASSWORD jumper in place to short the pins for an in-service relay on a long-term basis.

The SEL-T400L ships with the BREAKER jumper placed to leave the pins open (PULSE command disabled). With the pins open, you will not be able to close the control outputs with the **PULSE** command. For commissioning and testing the SEL-T400L output contacts, put the BREAKER jumper in the pins shorted position, as shown in *Figure 10.29*. See *Appendix C: SEL ASCII Commands* for more information about the **PULSE** command.

The SEL-T400L ships with the PASSWORD jumper placed to leave the pins open, as shown in *Figure 10.29* (password required). Use default passwords when first accessing the relay, and change the passwords following your com-

pany security policy and procedures before putting the relay in service. For relays permanently installed in your test laboratory, you can put the PASSWORD jumper in place to short the pins, for convenience (no password required).

Inspecting the Relay

Visual Inspection

The following items are included in your SEL-T400L shipment from SEL:

- SEL-T400L Relay
- CD containing the electronic version of the SEL-T400L instruction manual, USB driver for a Microsoft Windows-based computer, and a printable label template
- Configurable Label Kit
- SEL-C664 PC USB Cable
- Printed volume of the SEL-T400L instruction manual (if ordered)
- SEL-C5300 line cord (if ordered)

If any item is missing or damaged, please contact your distributor or SEL for a replacement.

If you ordered accessories with your SEL-T400L, SEL will ship them separately. ACSELERATOR QuickSet SEL-5030 Software is not included on the CD—use your free mySEL account to download the newest version from selinc.com.

The SEL-T400L ships with an 8131-01 SFP transceiver installed in Ethernet Port 5 and a plastic dust cover installed in differential Port 6. Do not remove this cover if you do not intend to use Port 6 in your application. If you ordered a transceiver for Port 6, it will ship separately. You will need to install the transceiver as explained in *Installing and Replacing SFP Transceivers on page 10.14*. Remove the dust cover only when installing the transceiver.

Perform the following visual inspection when the relay arrives:

- Remove the protective wrapping from the SEL-T400L.
- Inspect the front and rear panels of the SEL-T400L chassis.
- Check that no significant scratches or dents are evident on any outer surface.
- Confirm that all terminal strips and communications ports connectors on the rear panel are intact.

Examine the serial number label on the rear panel and confirm that the relay power supply voltage and nominal ac signal magnitudes (Volts AC and Amps AC) match your application. *Figure 10.30* shows a sample rear-panel serial number label.

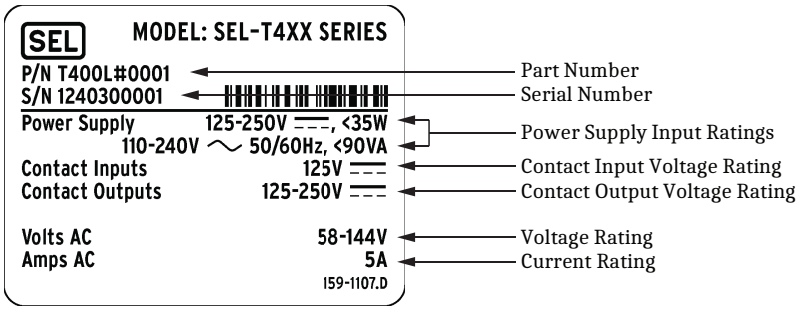

Figure 10.30 SEL-T400L Serial Number Label

The serial number label does not list power system phase rotation and frequency ratings because you can use relay settings to configure these parameters. The default settings are ABC phase rotation and 60 Hz nominal frequency.

If any serial number label specification is other than what you expected, please contact your distributor or SEL immediately.

Connecting and Applying Control Power

Connect control power to the SEL-T400L to continue initial setup of the relay. *Figure 10.5* shows the power supply connections.

Always attach a safety ground as the first connection you make to the SEL-T400L. Connect the grounding terminal on the rear panel (Terminal **25**; labeled **GND**) to a rack frame ground or main station ground for proper safety and performance.

Upon connecting control power, the relay turns on the LCD backlight and performs an internal self-test. When it completes this check, the relay displays pertinent information on the front-panel LCD and illuminates the **ENABLED** target LED (see *Front-Panel Operations on page 8.4*).

Checking Relay Status and Installed Hardware and Firmware

Use the relay front-panel HMI to view relay status without the need for any software, cables, or accessories (press **ENT**, scroll down twice to `Relay Status`, and press **ENT** again). If you established communication with the relay via Port F or Port 5, you can use a terminal emulator or QuickSet to view the relay status (see *Communications Setup on page 8.42* for details on how to establish communication with the relay).

Figure 10.31 shows the SEL-T400L status report in response to the **STATUS** (see *STATUS on page C.16*) command for a healthy relay.

```
=>STA <Enter>

SEL-T400L                                    Date: 2017/03/04  Time: 18:16:32.957
Station A                                    Time Source: HIRIG
                                             Serial Number: 1170231369

FID=SEL-T400L-R100-V0-Z001001-D20170321    CID=FB54

Failures
  No Failures

Warnings
  No Warnings

Temperature
  41.7  degrees Celsius

Relay Enabled
=>
```

Figure 10.31 Status Report for a Healthy Relay (Response to the STATUS Command)

For more information on relay status, see *Appendix F: Diagnostics*. If the relay reports errors or warnings, follow the instructions provided in *Appendix F: Diagnostics* to rectify the problem, collect information to help SEL troubleshoot the issue, or contact SEL for more assistance as needed.

Use the **VERSION** command (see *VERSION on page C.20*) to display the relay hardware and firmware configuration. The resulting VERSION report shows the part number, serial number, checksums, firmware release numbers, and other important relay configuration information. Confirm that all installed components are as expected. *Figure 10.32* shows the format of the report, and *Figure 10.33* shows a sample report. *Table 10.6* explains the individual data items and provides comments for each.

```
==>>VER <Enter>
FID=SEL-T400L-Rnnn-Vx-Zssspp-Dyyyymmdd
CID=nnnn
Partnumber:  T400L#xxxx
Serial Number:  nnnnnnnnnn
SELboot:
    BFID=SLBT-T400L-Rxxx-Vx-Zxxxxxx-Dxxxxxxxx
    Checksum:  nnnn
Mainboard:
    SD Card Size:  c GB
Analog Inputs:
    W:  Rated Input Current:  x Amp
    X:  Rated Input Current:  x Amp
        Rated Voltage Range:  xx.x-xxx.x V LN
Communications:
    Port 5:  SFP information
    Port 6:  SFP information
Extended Relay Features:
    None

If the above information is not as expected, contact SEL for assistance.
```

Figure 10.32 Data Items in the VERSION Report

```
==>>VER <Enter>
FID=SEL-T400L-R100-V0-Z001001-D20170321
CID=3611
Partnumber:  T400L#0001
Serial Number:  1170231369
SELboot:
    BFID=SLBT-T400L-R001-V0-Z001001-D20170321
    Checksum:  4BF9
Mainboard:
    SD Card Size:  8 GB
Analog Inputs:
    W:  Rated Input Current:  5 Amp
    X:  Rated Input Current:  5 Amp
        Rated Voltage Range:  57.7-144.3 V LN
Communications:
    Port 5:  1000BASE-SX (850nm, 300/550m)
    Port 6:  1000BASE-SX (850nm, 300/550m)
Extended Relay Features:
    None

If the above information is not as expected, contact SEL for assistance.
```

Figure 10.33 Sample VERSION Report

Table 10.6 Information Included in the VERSION Report

Data Item	Description	Comments
FID	Firmware identification string for SEL devices	Inspect the FID string to ensure the relay is running the expected firmware revision. See *Appendix B: Firmware Upgrade Instructions* for more information.
CID	Firmware file checksum	Use the firmware checksum as an independent extra check of the firmware version. Use the firmware verification tool available at selinc.com to verify authenticity of firmware files. See *Appendix B: Firmware Upgrade Instructions* for more information.
Partnumber	Relay part number	Contact SEL for particular part number and ordering information (see *Technical Support on page xxiii in the Preface*).
Serial Number	Relay serial number	Check whether the relay serial number matches the expected value and the serial number label on the device (see *Figure 10.30 on page 10.22*).
BFID	SELBOOT firmware Identification string	See *SELBOOT on page A.7* for further information.
Checksum	SELBOOT firmware file checksum	Use the firmware checksum as an independent extra check of the firmware version. Use the firmware verification tool available at selinc.com to verify authenticity of firmware files. See *Appendix B: Firmware Upgrade Instructions* for more information.
SD Card Size	SD card capacity	Confirm the SD card capacity is as expected.
W analog input	Rated secondary current level	Check if the analog input ratings match those on the serial number label on the device (see *Figure 10.30 on page 10.22*).
X analog input		
Voltage analog input	Rated secondary voltage range	
Port 5 SFP Information	Specification of the transceiver installed in Port 5 and Port 6	Verify that the installed transceiver is as expected and meets the wavelength and power budget requirements of your application.
Port 6 SFP Information		

Replacing the SD Card

NOTE: A faulty SD card prevents the SEL-T400L from saving event reports. Settings, SER records, and other nonvolatile data items are stored separately and are not affected by the SD card failure. Protection and other functions operate normally.

The SEL-T400L stores event reports on an 8GB Micro SD card. *Figure 10.28* shows the location of the SD card on the relay top printed circuit board. If you see the SD card warning in the relay diagnostic messages, contact SEL for a replacement SD card. To replace the card, remove the SEL-T400L front panel and gently push the SD card in. This releases the card from the card socket. Pull the old card out. Install the new card received from SEL by gently pushing it into the open slot of the card socket. SEL-T400L uses a proprietary method to format the SD card. Do not attempt to use a standard micro SD card in the relay, and do not attempt to read the SEL-T400L card on a standard computer system.

Cleaning Recommendations

Perform the following steps and use care when cleaning the SEL-T400L:

Step 1. Use a mild soap or detergent solution and a damp cloth to clean the relay chassis.

Be careful cleaning the front and rear panels; do not use abrasive materials, polishing compounds, or harsh chemical solvents (such as xylene or acetone) on any relay surface. Be careful when cleaning areas in proximity to the Port 5 and Port 6 SFP slots to avoid entry of any substance into these slots.

Step 2. Allow the relay to air dry, or wipe dry with a soft dry cloth.

Replacing the Lithium Battery

⚠CAUTION
There is danger of explosion if the battery is incorrectly replaced. Replace only with Ray-O-Vac no. BR2335 or equivalent recommended by manufacturer. See Owner's Manual for safety instructions. The battery used in this device may present a fire or chemical burn hazard if mistreated. Do not recharge, disassemble, heat above 100°C or incinerate. Dispose of used batteries according to the manufacturer's instructions. Keep battery out of reach of children.

⚠CAUTION
Equipment components are sensitive to electrostatic discharge (ESD). Undetectable permanent damage can result if you do not use proper ESD procedures. Ground yourself, your work surface, and this equipment before removing any cover from this equipment. If your facility is not equipped to work with these components, contact SEL about returning this device and related SEL equipment for service.

The SEL-T400L uses a battery-backed real-time clock that keeps calendar time during extended outages. The installed battery has a 10-year life span and does not discharge while the relay is powered (i.e., battery life will typically be much longer than 10 years). Because the SEL-T400L is typically used with a high-accuracy external clock, the battery is not critical and its replacement is unnecessary in most applications. If you need to replace the real-time clock battery, perform the following steps.

Step 1. Remove the relay from service.

a. Follow the standard procedure of your company for removing a relay from service.

b. Disconnect power from the relay.

c. Remove the relay from the rack or panel if necessary to access the top cover.

d. Retain the **GND** connection, if possible, and ground the equipment to an ESD mat.

Step 2. Disconnect the front-panel cable from the front panel.

Step 3. Remove the front panel from the relay.

Step 4. Remove the top cover to access the battery.

Step 5. Locate the lithium battery.

The lithium battery is at the front of the main board (see *Figure 10.28*).

Step 6. Remove the spent battery from beneath the clip of the battery holder.

Step 7. Replace the battery with an exact replacement.

Use a 3 V lithium coin cell, Ray-O-Vac No. BR2335 or equivalent. The positive side (+) of the battery faces up.

Step 8. Reinstall the relay top cover.

Step 9. Reconnect the front-panel cable to the front panel.

Step 10. Reattach the front panel.

Step 11. Set the relay date and time by using QuickSet or by issuing the **TIM** command.

Step 12. Follow standard procedure of your company to return the relay to service.

SECTION 11

Testing and Commissioning

SEL-T400L protection elements, schemes, and fault-locating methods use incremental quantities and traveling waves. To test these elements and schemes, you can use one of the following two approaches. You must either ensure that the relay input signals realistically represent power system events, or use synthesized test signals that take the design of the SEL-T400L into account. The former approach is more suited for testing the SEL-T400L to validate the relay design and performance, such as when certifying the relay make and model for use. The latter approach is more suited for commissioning testing relays in the field.

NOTE: When testing the SEL-T400L, you must use test signals that are either representative of relay voltages and currents during power system events, or are synthesized taking the SEL-T400L operating principles into account. Applying arbitrary test signals may yield unexpected test results.

When testing the SEL-T400L, you must ensure that both currents and voltages transition from one state to another, such as from prefault to fault, in a way that reflects the resistive-inductive nature of the power system. Specifically, the current signal must not transition from prefault to fault without an adequate exponentially decaying dc component. Because traveling waves (TWs) are sharp changes in currents and voltages, you must use test signals that contain transition times in the order of several microseconds when testing the traveling-wave functionality of the relay.

Testing the SEL-T400L to validate the relay design and performance requires specialized equipment such as transient simulation programs to generate test cases and high-fidelity playback equipment to apply the secondary voltages and currents to the SEL-T400L under test. Contact SEL for more information related to certification testing.

This section provides recommendations for commissioning testing of the SEL-T400L in the field. Commissioning testing is concerned with verifying that the application of a specific relay is correct (i.e., a specific SEL-T400L is wired correctly, runs the correct firmware version, applies settings as intended, and responds to line faults within the limits of its performance and the settings philosophy applied). Commissioning testing is not concerned with design or performance of the relay make and model; it simply verifies the health of the specific SEL-T400L device and associated equipment, as well as the workmanship involved in applying and installing that device.

A common approach to commissioning testing is to apply three-phase synthetic signals, which can be generated readily by relay test sets. These signals are sine waves with freely controlled magnitudes and angles. The test signals include transitions from one state to a different state, typically from prefault to fault, with a freely adjustable transition time. This section provides specific instructions on how to generate the required synthetic signals for testing SEL-T400L incremental-quantity elements and schemes, and the impedance-based fault-locating methods.

This section also discusses testing traveling-wave elements, schemes, and fault-locating methods. The section defines requirements for the synthetic traveling waves required for testing and introduces specific tests for traveling-wave functionality of the SEL-T400L. Use the SEL-T4287 Traveling-Wave Test System for these tests.

The SEL-T400L (firmware version R102 and newer) allows you to test its protection and fault locating functionality through use of a digital playback of events obtained using Electromagnetic Transient Program (EMTP) simulations or events acquired by digital fault recorders or relays such as the SEL-T400L and SEL-400 series relays. This capability allows you to validate the SEL-T400L design and analyze its performance using test signals from recorded or accurately simulated power system events. When the playback signals are acquired or simulated with a high sampling rate (1, 2, 3, 4, or 5 MHz), you can test all the relay protection and fault locating functionality, including traveling-wave-based functions. When the playback signals are acquired or simulated with a medium sampling rate (1, 2, 4, 8, or 10 kHz), you can test all the relay functionality, but not the traveling-wave-based functions.

NOTE: When using either transient simulation programs to create the playback test signals or field records from devices other than the SEL-T400L, make sure to save or convert the output record to IEEE C37.111 COMTRADE format.

When the relay is playing back an event, the relay substitutes the input current and voltage signals with the corresponding signals uploaded to the relay memory prior to the playback test. During signal playback, the relay disables all its outputs for security. You have the option to keep the relay outputs operational during playback according to your test requirements.

The section is organized as follows:

- *Introduction to SEL-T400L Testing on page 11.2* provides the general commissioning testing philosophy SEL recommends for the SEL-T400L and specifies the scope, required equipment, and personnel skillset necessary for testing.
- *Testing With Incremental Currents and Voltages on page 11.5* describes a modular test procedure for the incremental-quantity-based elements. You may use all of these tests or a subset, depending on your application and testing philosophy, and you can adapt equations from this section to run other tests per your requirements. This test procedure includes numerical examples for illustration and better understanding.
- *Testing With Traveling Waves on page 11.23* provides step-by-step instructions for using the SEL-T4287 to test the TW87 scheme, TW32 directional element, and the TW fault-locating methods.
- *Event Playback Testing on page 11.39* provides step-by-step instructions for playing back test files.
- *Basic Relay Inspection and Tests on page 11.48* reviews basic checks for voltage and current metering, control inputs and outputs, and communications ports.
- *Measuring Line Propagation Time During Line Energization Test on page 11.50* describes a step-by-step procedure for measuring the TW line propagation time required as one of the key SEL-T400L settings.

Introduction to SEL-T400L Testing

General Testing Philosophy

This section describes a test procedure suitable for commissioning testing of the SEL-T400L protection elements, schemes, and fault-locating methods. This procedure includes the following tests.

Testing with incremental quantities:

- Overcurrent supervision for the TW87 scheme
- Overcurrent supervision for the POTT scheme

- TD32 directional element
- TD21 distance element
- POTT protection scheme (single-end test with channel loopback)
- POTT protection scheme (end-to-end test)
- Single-ended impedance-based fault locating
- Double-ended impedance-based fault locating (end-to-end test)

Testing with traveling waves:

- TW87 protection scheme and double-ended traveling-wave-based fault locating (end-to-end test)
- TW32 directional element
- Single-ended traveling-wave-based fault locating

The test procedure this section describes focuses on verifying that the SEL-T400L elements and schemes are operational and are using settings as intended. This procedure is not meant to prove relay design and performance. Use known methods to verify wiring, communications channels, and relay inputs and outputs prior to testing protection elements, schemes, and fault-locating methods (see *Basic Relay Inspection and Tests on page 11.48* for more information).

SEL recommends using two steps to test the SEL-T400L protection and fault-locating functions:

Step 1. The first step verifies the incremental-quantity-based elements, schemes, auxiliary logic, and the impedance-based fault-locating methods. This step uses a commonly available three-phase relay test set. Your test set must be capable of stepping from prefault to fault values at a point on wave (transition time) that you control and must be able to faithfully reproduce a frequency spectrum of up to several kilohertz.

Step 2. The second step verifies the TW87 scheme, the TW32 directional element, and the traveling-wave-based fault-locating methods. This step uses a traveling-wave test set. Use the TW test mode (see *TWTEST on page C.19*) to facilitate TW87 tests. In the TW test mode, you can test the traveling-wave part of the TW87 scheme through use of only TW signals, without the need to apply the associated low-frequency (50/60 Hz) signals. You will have fully tested the TW87 scheme if you tested its traveling-wave-based functionality in the TW test mode and the overcurrent supervision and TD32 directional supervision with incremental quantities in *Step 1*.

Scope of Testing

Follow your company's practices for testing protective relays. The test procedure this section describes assumes the test personnel are proficient in testing relays in general. This includes, but is not limited to, the following tasks and steps:

- Removing the relay from service and restoring it back into service
- Testing wiring, relay input circuitry, and associated settings, such as CT or PT ratios
- Verifying revisions of relay firmware and settings file
- Testing digital and analog protection communications circuits
- Testing tripping outputs and circuits

- Performing an on-load metering test before enabling the communications schemes and trip outputs.
- Performing a test trip, if required

This section focuses on testing protection and fault-locating functions through the use of secondary injection from a typical three-phase test set and a traveling-wave test set.

Secondary Injection Test Set Requirements

You can use any commonly available test set to test relay input circuits, incremental-quantity elements, and impedance-based fault-locating methods. The test set must support the following:

- Applying sine-wave three-phase currents and voltages with freely selected magnitudes and angles at the selected power system frequency
- Applying prefault signals for at least 0.75 seconds, and fault signals for at least 2 power system cycles
- Stepping from prefault to fault currents and voltages at a point in time selected freely with accuracy better than 0.1 ms
- For end-to-end testing, synchronizing the prefault-to-fault transition times between two test sets with accuracy better than about 0.1 ms (satellite-synchronized testing option)

The traveling-wave test set must support the following (the SEL–T4287 Traveling-Wave Test System meets and exceeds these requirements):

- Applying sharp changes in currents from a prefault value of 0 to a test value of several amperes secondary, with a rise time shorter than about 5 μs and a half-way decay time longer than about 0.3 ms
- Applying the sharp changes in all three phases simultaneously, with scatter below 1 μs, and with traveling-wave current present in all three phases
- Applying a second sharp change in currents to simulate a through fault or internal fault condition, with a delay of as long as 1.7 ms with respect to the first change, and timing accuracy better than about 5 μs
- For end-to-end testing, synchronizing the time of the first TWs between two test sets with accuracy better than about 1 μs (satellite-synchronized testing option)

Personnel and General Equipment Requirements

This section assumes that the personnel using or modifying the described test procedure are proficient in the following tasks:

- Relay testing in general
- Operating a three-phase test set and associated software
- Operating a traveling-wave test set and associated software
- Complex-math algebra involving impedances and phasors
- Operating and interfacing with the SEL-T400L
- End-to-end testing with multiple test crews, if end-to-end testing is included in the commissioning test plans

You will need the following equipment to perform the tests this section describes:

- A portable computer with associated software to interface with the relay and the test set or test sets
- A three-phase test set capable of stepping the test signals from prefault to fault values at the point on wave that you control
- A traveling-wave test set capable of generating current waves, such as the SEL-T4287 Traveling-Wave Test System

Observing Element and Scheme Response

Monitoring the tripping outputs will provide the combined response of all enabled elements and associated logic. If you prefer to observe specific outputs or the tested elements or schemes, you can route a Relay Word bit of interest to the tripping outputs by temporarily modifying the **TR** setting of the relay (set **TR** = Relay Word bit of interest). If you use this method, remember to restore and carefully check the original value of the TR setting after testing. See *Appendix D: Relay Word Bits* for the complete list of output bits or *Section 2: Protection Elements and Schemes* for the list of bits associated with each protection element and scheme.

You can also observe element and scheme response by using the SEL-T400L event or Sequential Events Records (SER) reports. The following text refers to Relay Word bits you should observe while testing, but does not specify the method for observing the assertion and checking the operating time for these bits.

When testing fault-locating methods, obtain the fault location the relay calculated from the SUMMARY report, front-panel HMI reading, or the header file of the event report.

Testing With Incremental Currents and Voltages

Test Currents and Voltages

Apply symmetrical prefault voltages and currents at the nominal system frequency per the **NFREQ** relay setting, and at the system phase rotation per the **PHROT** relay setting. Apply prefault current magnitude of at least 20 percent of the CT-rated current. Apply prefault voltage magnitude equal to the nominal voltage (i.e., use a phase-to-ground voltage of **VNOM** / $\sqrt{3}$). Consider relay voltages and currents approximately in-phase or out-of-phase to model active power transfer through the protected line.

Apply prefault voltages and currents for at least 0.75 seconds. Before applying fault values, verify that the `ARMED` target LED is illuminated green (you can also inspect the ARMED_G Relay Word bit; see *Status and Target LEDs on page 8.10* for additional information).

Calculate and apply the following fault (FLT) currents and voltages based on the prefault (PRE) currents and voltages you selected, according to *Equation 11.1*:

$$
\begin{aligned}
IA_{FLT} &= IA_{PRE} + \Delta IA \\
IB_{FLT} &= IB_{PRE} + \Delta IB \\
IC_{FLT} &= IC_{PRE} \\
VA_{FLT} &= VA_{PRE} + \Delta VA \\
VB_{FLT} &= VB_{PRE} + \Delta VB \\
VC_{FLT} &= VC_{PRE}
\end{aligned}
$$

Equation 11.1

The test procedures described in this section cover A-phase ground elements and AB phase elements. The incremental currents (ΔIA, ΔIB) and voltages (ΔVA, ΔVB) depend on test purpose and test parameters and are described in the following text. All quantities in *Equation 11.1* are phasors (i.e., complex numbers). All following calculations use complex-number algebra.

In dual-breaker applications (**LINEI** = COMB), you may choose one of the following three approaches for injecting current signals:

- Inject a single three-phase set of currents into both the W and X current inputs. Remember that the line current is the sum of the W and X currents and depends on the CTRW and CTRX ratios. With equal CTRW and CTRX ratios, your line current is double the injected current.
- Inject a single three-phase set of currents into a selected W or X current input. Remember the line current is normalized for the effective CT ratio (i.e., the maximum of the CTRW and CTRX ratios). With equal ratios, the line current is the injected current. With unequal ratios, the line current may differ from the injected current depending on the input to which you inject the current signal.
- Inject currents separately into both the W and X current inputs of the relay. The following equations are applicable to the sum of the injected current (i.e., the line current). You may apply any arbitrary division of the two currents between the W and X inputs of the relay, as long as the sum current matches the required line test current. This approach is the least practical of the three approaches because it requires six test currents.

Use the **MET** command (see *Verifying Voltage and Current Inputs on page 11.48*) to verify that, given the **LINEI**, **CTRW**, and **CTRX** settings, your secondary injection reflects your intent, and that you correctly applied the **LINEI**, **CTRW**, and **CTRX** settings.

The SEL-T400L uses current to detect an open-pole condition. The **OPCS** setting specifies which current (W input, X input, or combined) is used for monitoring the open-pole condition (see *Open-Pole Detection Logic on page 2.43*). Ensure that the current specified under the **OPCS** setting is at least 20 percent of the CT-rated current in the prefault state before you apply the fault values.

In the following calculations, you will need a value related to the Z0-to-Z1 ratio for the line. Consider calculating this value first, as shown in *Equation 11.2*:

$$
D = \frac{3}{2 + (Z0MAG/Z1MAG) \bullet 1\angle(Z0ANG - Z1ANG)}
$$

Equation 11.2

If you have calculated the k0 factor by using the Z0 and Z1 line impedances, you can calculate the value of D as follows:

$$D = \frac{1}{1 + k0}$$

Equation 11.3

In all tests that follow, you will need to calculate a transition time from prefault to fault values through use of *Equation 11.4*:

$$t_0 = \frac{1}{NFREQ}\left(NC - \frac{angle(\Delta IA)}{360°}\right)$$

Equation 11.4

where NC is the number of integer cycles of the prefault voltages and currents you want to apply; consider NC = round(0.75 s • NFREQ).

Transitioning from prefault to fault exactly at the specified time (t_0) ensures that the incremental current develops as a sine wave, and there is no need to reproduce the decaying dc component in the current. Relay voltages during testing with these synthetic signals will likely experience step changes. These may impact the accuracy of frequency measurement and result in small incremental signals a power cycle after the prefault-to-fault transition. These small incremental signals have no impact on the accuracy of the commissioning testing this section describes.

This section uses numerical examples for illustration of various test signals. *Table 11.1* shows the relay settings used for the examples in this section.

Table 11.1 Sample Relay Settings for Illustration of Test Signals[a] (Sheet 1 of 2)

Setting	Value	Description
NFREQ	60 Hz	Nominal System Frequency
PHROT	ABC	System Phase Rotation
LINEI	IW	Line Current Source
CTRW	200	Current Transformer Ratio, Input W
PTR	4347.8	Potential Transformer Ratio
VNOM	115 V secondary	PT Nominal Voltage (L-L)
Z1MAG	10.0 Ω secondary	Positive-Sequence Line Impedance Magnitude
Z1ANG	86.0°	Positive-Sequence Line Impedance Angle
Z0MAG	30.0 Ω secondary	Zero-Sequence Line Impedance Magnitude
Z0ANG	76.0°	Zero-Sequence Line Impedance Angle
LL	200 km	Line Length (LLUNIT = km)
TWLPT	681 µs	TW Line Propagation Time
XC	0.0 Ω secondary	Series Capacitor Reactance
TP50P	8.5 A secondary	TW87 Phase Overcurrent Supervision Threshold
TP50G	5 A secondary	TW87 Ground Overcurrent Supervision Threshold
TD32ZF	2.0 Ω secondary	Forward Impedance Threshold
TD32ZR	3.0 Ω secondary	Reverse Impedance Threshold
TD21MP	0.75 pu	Phase Distance Element Reach
TD21MG	0.70 pu	Ground Distance Element Reach

Table 11.1 Sample Relay Settings for Illustration of Test Signals[a] (Sheet 2 of 2)

Setting	Value	Description
TP67P	7 A secondary	POTT Phase Overcurrent Supervision Threshold
TP67G	4 A secondary	POTT Ground Overcurrent Supervision Threshold

[a] Nominal Relay Current = 5 A Secondary.

Table 11.2 shows the prefault currents and voltages selected for the tests in the numerical examples.

Table 11.2 Prefault Test Signals

Relay Input	Prefault	
	Magnitude	Angle
VA	66.4 V	0.0°
VB	66.4 V	–120.0°
VC	66.4 V	120.0°
IA	2.00 A	0.0°
IB	2.00 A	–120.0°
IC	2.00 A	120.0°

The D factor in the examples, per *Equation 11.2*, is $0.6022\angle 6.0°$.

TEST 1. TP50G Pickup Setting

This test uses a synthetic forward AG fault that results in an incremental replica loop current equal to the intended **TP50G** setting and an incremental loop voltage corresponding to the system impedance behind the relay of twice the **TD32ZF** setting. The value β is the multiple of pickup (i.e., the ratio of the applied operating signal to the tested pickup setting). Calculate the test incremental signals through use of *Equation 11.5*:

$$\begin{aligned}
\Delta IA &= \beta \bullet TP50G \bullet |D| \bullet 1\angle IA_{PRE} \\
\Delta IB &= 0 \\
\Delta VA &= -2 \bullet TD32ZF \bullet TP50G \bullet 1\angle Z1ANG \bullet 1\angle IA_{PRE} \\
\Delta VB &= 0
\end{aligned}$$

Equation 11.5

First, use β = 1.5 (operating current is 150 percent of the pickup setting) and calculate and apply test signals per *Equation 11.1* with the incremental quantities per *Equation 11.5*. Verify that the OC87AG Relay Word bit asserted a few milliseconds after you applied the fault quantities.

Next, use β = 0.8 (operating current is 80 percent of the pickup setting) and calculate and apply test signals per *Equation 11.1* with the incremental quantities per *Equation 11.5*. Verify that the OC87AG Relay Word bit did not assert after you applied the fault quantities.

Table 11.3 shows the prefault, incremental, and fault test voltages and currents for β = 1.5 in the present numerical example. *Figure 11.1* shows a typical relay test set user interface with values from *Table 11.3* entered and ready for the test.

Table 11.3 Prefault, Incremental, and Fault Signals for Testing TP50G With a Multiple of Pickup of 1.5

Relay Input	Prefault[a]		Incremental Value		Fault	
	Magnitude	Angle	Magnitude	Angle	Magnitude	Angle
VA	66.4 V	0.0°	20.0 V	–94.0°	68.0 V	–17.0°
VB	66.4 V	–120.0°	0.0 V	N/A	66.4 V	–120.0°
VC	66.4 V	120.0°	0.0 V	N/A	66.4 V	120.0°
IA	2.00 A	0.0°	4.52 A	0.0°	6.52 A	0.0°
IB	2.00 A	–120.0°	0.0 A	N/A	2.00 A	–120.0°
IC	2.00 A	120.0°	0.0 A	N/A	2.00 A	120.0°

[a] Apply transition time t_0 = 750.0 ms.

	1			2		
Name	State 1			State 2		
V L1-E	66.40 V	0.00 °	60.000 Hz	68.00 V	-17.00 °	60.000 Hz
V L2-E	66.40 V	-120.00 °	60.000 Hz	66.40 V	-120.00 °	60.000 Hz
V L3-E	66.40 V	120.00 °	60.000 Hz	66.40 V	120.00 °	60.000 Hz
I L1	2.000 A	0.00 °	60.000 Hz	6.520 A	0.00 °	60.000 Hz
I L2	2.000 A	-120.00 °	60.000 Hz	2.000 A	-120.00 °	60.000 Hz
I L3	2.000 A	120.00 °	60.000 Hz	2.000 A	120.00 °	60.000 Hz
CMC Rel	0 output(s) active			0 output(s) active		
Trigger		750.0 ms			200.0 ms	

Figure 11.1 User Interface of a Popular Relay Test Set Software Applying Test Signals of *Table 11.3*.

In this particular test, your intent is to apply 1.5 • 5 A = 7.5 A secondary, or 1500 A primary, as the AG-loop incremental replica current. You can verify this by plotting the DIZAG signal (DIZAG = DIZA – DIZ0; use the custom calculation feature in SYNCHROWAVE Event to calculate DIZAG) from the 10 kHz oscillography record (TDR). Remember that the 1500 A primary is a root-mean-square (rms) value, so you will plot a peak value of about 2115 A primary. It is also your intent to apply 2 • 2 Ω • 5 A = 20 V secondary, or 86.9 kV primary (122.9 kV peak), as the AG-loop incremental voltage. You may verify it by plotting the DVA signal in the TDR oscillography record. Moreover, you apply a forward fault condition, which you can verify by plotting the DIZAG and DVA signals and checking if they are of similar shape and opposite polarity. *Figure 11.2* plots the AG-loop incremental voltage and incremental replica current for the test signals shown in *Table 11.3*.

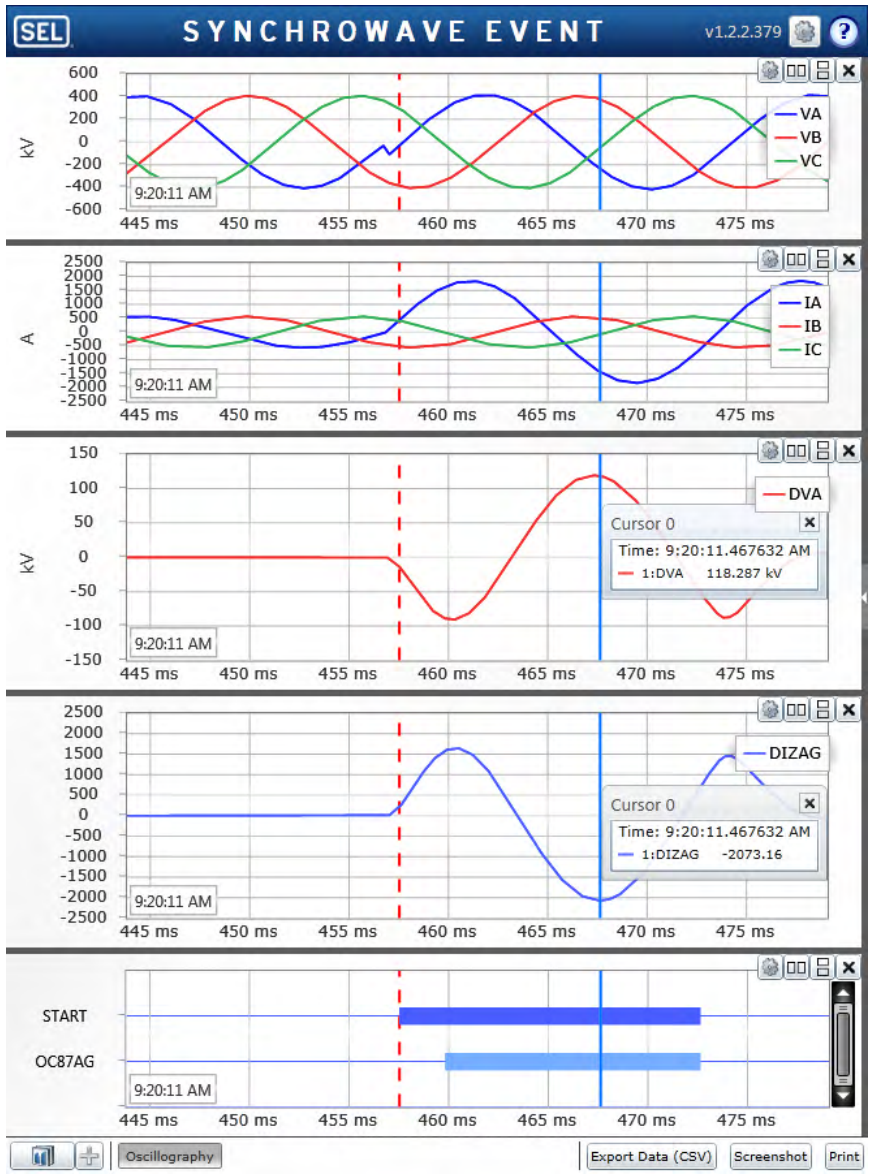

Figure 11.2 Test Voltages and Currents, AG-Loop Incremental Voltage and Incremental Replica Current, and Relevant Relay Word Bits for the Test Signals of *Table 11.3*

TEST 2. TP50P Pickup Setting

This test uses a synthetic forward AB fault that results in an incremental replica loop current equal to the intended **TP50P** setting and an incremental loop voltage corresponding to the system impedance behind the relay of twice the **TD32ZF** setting. β is the multiple of pickup. Calculate the test incremental signals by using the following equations:

$$\Delta IA = \beta \bullet 0.5 \bullet TP50P \bullet 1\angle IA_{PRE}$$

$$\Delta IB = -\Delta IA$$

$$\Delta VA = -TD32ZF \bullet TP50P \bullet 1\angle Z1ANG \bullet 1\angle IA_{PRE}$$

$$\Delta VB = -\Delta VA$$

Equation 11.6

First, use β = 1.5 (operating current is 150 percent of the pickup setting) and calculate and apply test signals per *Equation 11.1* with the incremental quantities per *Equation 11.6*. Verify that the OC87AB Relay Word bit asserted a few milliseconds after you applied the fault quantities.

Next, use β = 0.8 (operating current is 80 percent of the pickup setting) and calculate and apply test signals per *Equation 11.1* with the incremental quantities per *Equation 11.6*. Verify that the OC87AB Relay Word bit did not assert after you applied the fault quantities.

Table 11.4 shows the prefault, incremental, and fault test voltages and currents for β = 1.5 in the present numerical example.

Table 11.4 Prefault, Incremental, and Fault Signals for Testing TP5OP With a Multiple of Pickup of 1.5

Relay Input	Prefault[a]		Incremental Value		Fault	
	Magnitude	Angle	Magnitude	Angle	Magnitude	Angle
VA	66.4 V	0.0°	17.0 V	–94.0°	67.4 V	–14.6°
VB	66.4 V	–120.0°	17.0 V	86.0°	51.7 V	–128.3°
VC	66.4 V	120.0°	0.0 V	N/A	66.4 V	120.0°
IA	2.00 A	0.0°	6.38 A	0.0°	8.38 A	0.0°
IB	2.00 A	–120.0°	6.38 A	180.0°	7.58 A	–166.8°
IC	2.00 A	120.0°	0.0 A	N/A	2.00 A	120.0°

[a] Apply transition time t_0 = 750.0 ms.

In this particular test, your intent is to apply 1.5 • 8.5 A = 12.75 A secondary, or 2550 A primary (3606 A peak), as the AB-loop incremental replica current. You can verify this by plotting the DIZAB signal (DIZAB = DIZA – DIZB) from the TDR oscillography record. It is also your intent to apply 2 • 2 Ω • 8.5 A = 34 V secondary, or 147.8 kV primary (209.1 kV peak), as the AB-loop incremental voltage. You can verify this by plotting the DVAB signal (DVAB = DVA – DVB) in the TDR oscillography record. Moreover, you apply a forward fault condition, which you can verify by plotting the DIZAB and DVAB signals and checking if they are of similar shape and opposite polarity. *Figure 11.3* plots the AB-loop incremental voltage and incremental replica current for the test signals shown in *Table 11.4*.

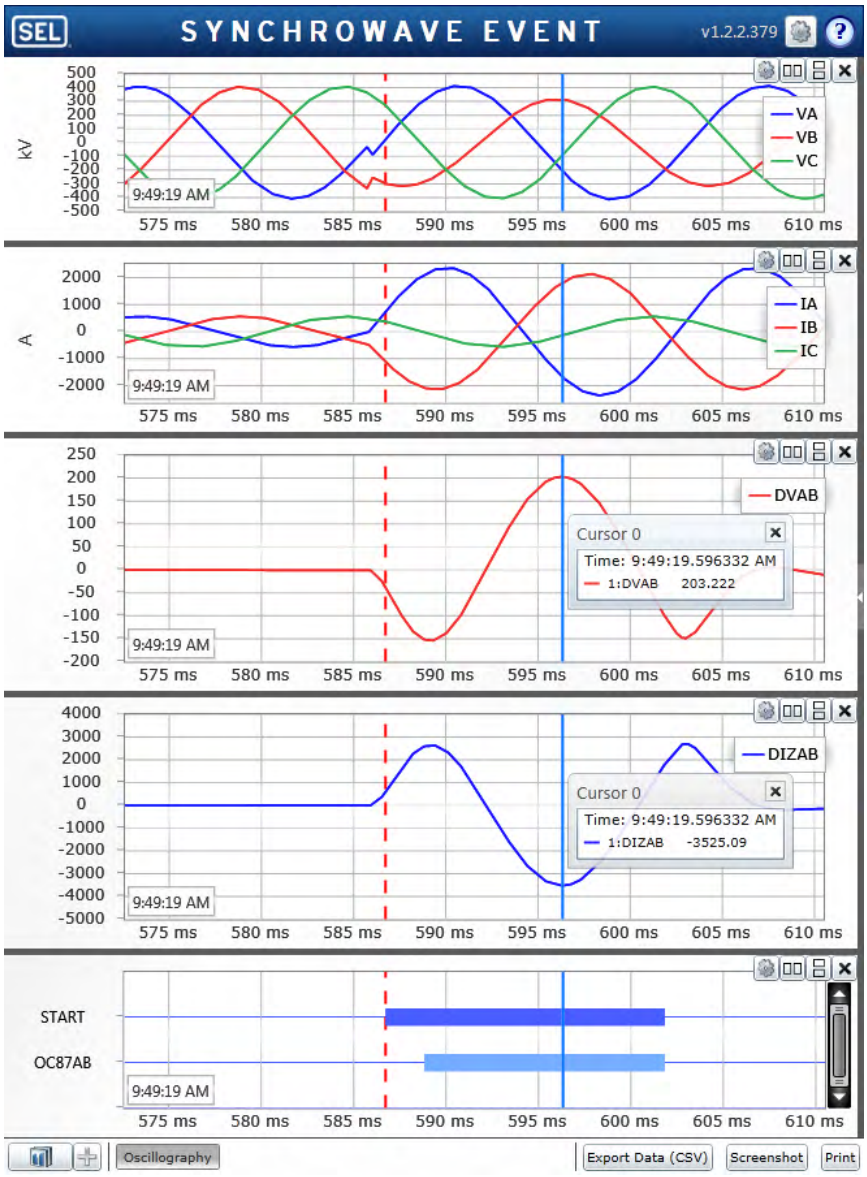

Figure 11.3 Test Voltages and Currents, AB-Loop Incremental Voltage and Incremental Replica Current, and Relevant Relay Word Bits for the Test Signals of *Table 11.4*

TEST 3A. TP67G Pickup Setting When XC = 0

Apply a test procedure identical to that for the TP50G pickup setting (*TEST 1. TP50G Pickup Setting*), but use the **TP67G** setting instead of the **TP50G** setting to calculate the test signals, and verify correct operation of the OCTPAG Relay Word bit instead of the OC87AG Relay Word bit.

Table 11.5 shows the prefault, incremental, and fault test voltages and currents for β = 1.5 in the present numerical example.

Table 11.5 Prefault, Incremental, and Fault Signals for Testing TP67G With a Multiple of Pickup of 1.5

Relay Input	Prefault[a]		Incremental Value		Fault	
	Magnitude	Angle	Magnitude	Angle	Magnitude	Angle
VA	66.4 V	0.0°	16.0 V	–94.0°	67.2 V	–13.7°
VB	66.4 V	–120.0°	0.0 V	N/A	66.4 V	–120.0°
VC	66.4 V	120.0°	0.0 V	N/A	66.4 V	120.0°
IA	2.00 A	0.0°	3.61 A	0.0°	5.61 A	0.0°
IB	2.00 A	–120.0°	0.0 A	N/A	2.00 A	–120.0°
IC	2.00 A	120.0°	0.0 A	N/A	2.00 A	120.0°

[a] Apply transition time t_0 = 750.0 ms.

TEST 3B. TP67G Pickup Setting When XC > 0 (Series-Compensated Lines)

NOTE: If testing the relay using the specific values given here, note that Test 3B and Test 4B use different settings for TP67G and TP67P, respectively, from those given in *Table 11.1*. Make sure to change the settings in the relay to match the values given for these two tests, returning them to the *Table 11.1* values when finished.

For this test, use the normal line load current for the prefault current, and calculate the effective (E) pickup level for the TP67G element as follows:

$$\mathrm{TP67G(E)} = \frac{\sqrt{3} \bullet \mathrm{TP67G} \bullet \left|\mathrm{IA_{PRE}}\right| \bullet \mathrm{XC}}{\mathrm{VNOM}}$$

Equation 11.7

Follow the same test procedure as for the TP67G pickup setting when XC = 0 (*TEST 3A. TP67G Pickup Setting When XC = 0*), but use the TP67G(E) value instead of the **TP67G** settings value.

Assuming your application on a series-compensated line with XC = 8 Ω secondary (80 percent compensation) requires a TP67G setting of 8 A secondary, use *Equation 11.7* to calculate the effective TP67G pickup for a load current of 2 A secondary, and obtain 1.93 A secondary as the effective setting at 2 A secondary prefault. *Table 11.6* shows the prefault, incremental, and fault test voltages and currents for β = 1.5 in the numerical example to test the 1.93 A secondary pickup value the relay uses if the prefault current is 2 A secondary.

Table 11.6 Prefault, Incremental, and Fault Signals for Testing TP67G in Series-Compensated Applications With a Multiple of Pickup of 1.5

Relay Input	Prefault[a]		Incremental Value		Fault	
	Magnitude	Angle	Magnitude	Angle	Magnitude	Angle
VA	66.4 V	0.0°	7.7 V	–94.0°	66.3 V	–6.7°
VB	66.4 V	–120.0°	0.0 V	N/A	66.4 V	–120.0°
VC	66.4 V	120.0°	0.0 V	N/A	66.4 V	120.0°
IA	2.00 A	0.0°	1.74 A	0.0°	3.74 A	0.0°
IB	2.00 A	–120.0°	0.0 A	N/A	2.00 A	–120.0°
IC	2.00 A	120.0°	0.0 A	N/A	2.00 A	120.0°

[a] Apply transition time t_0 = 750.0 ms.

TEST 4A. TP67P Pickup Setting When XC = 0

Apply a test procedure identical to that for the TP50P pickup setting (*TEST 2. TP50P Pickup Setting*), but use the **TP67P** setting instead of the **TP50P** setting to calculate the test signals, and verify correct operation of the OCTPAB Relay Word bit instead of the OC87AB Relay Word bit.

Table 11.7 shows the prefault, incremental, and fault test voltages and currents for β = 1.5 in the present numerical example.

Table 11.7 Prefault, Incremental, and Fault Signals for Testing TP67P With a Multiple of Pickup of 1.5

Relay Input	Prefault[a]		Incremental Value		Fault	
	Magnitude	Angle	Magnitude	Angle	Magnitude	Angle
VA	66.4 V	0.0°	14.0 V	–94.0°	66.9 V	–12.1°
VB	66.4 V	–120.0°	14.0 V	86.0°	54.2 V	–126.5°
VC	66.4 V	120.0°	0.0 V	N/A	66.4 V	120.0°
IA	2.00 A	0.0°	5.25 A	0.0°	7.25 A	0.0°
IB	2.00 A	–120.0°	5.25 A	180.0°	6.49 A	–164.5°
IC	2.00 A	120.0°	0.0 A	N/A	2.00 A	120.0°

[a] Apply transition time t_0 = 750.0 ms.

TEST 4B. TP67P Pickup Setting When XC > 0 (Series-Compensated Lines)

For this test, use the normal line load current for the prefault current and calculate the effective (E) pickup level for the TP67P element as follows:

$$\mathrm{TP67P(E)} = \frac{\sqrt{3} \bullet \mathrm{TP67P} \bullet \left|\mathrm{IA_{PRE}}\right| \bullet \mathrm{XC}}{\mathrm{VNOM}}$$

Equation 11.8

Follow the same test procedure as for the TP67P pickup setting when XC = 0 (*TEST 4A. TP67P Pickup Setting When XC = 0 on page 11.14*), but use the TP67P(E) value instead of the **TP67P** settings value.

Assuming your application on a series-compensated line with XC = 8 Ω secondary (80 percent compensation) requires a **TP67P** setting of 10 A secondary, use *Equation 11.8* to calculate the effective **TP67P** pickup for the load current of 2 A secondary and obtain 2.41 A secondary. *Table 11.8* shows the prefault, incremental, and fault test voltages and currents for β = 1.5 in the numerical example to test the 2.41 A secondary pickup value the relay uses if the prefault current is 2 A secondary.

Table 11.8 Prefault, Incremental, and Fault Signals for Testing TP67P in Series-Compensated Applications With a Multiple of Pickup of 1.5 (Sheet 1 of 2)

Relay Input	Prefault[a]		Incremental Value		Fault	
	Magnitude	Angle	Magnitude	Angle	Magnitude	Angle
VA	66.4 V	0.0°	4.8 V	–94.0°	66.2 V	–4.2°
VB	66.4 V	–120.0°	4.8 V	86.0°	62.1 V	–121.9°
VC	66.4 V	120.0°	0.0 V	N/A	66.4 V	120.0°
IA	2.00 A	0.0°	1.81 A	0.0°	3.81 A	0.0°

Table 11.8 Prefault, Incremental, and Fault Signals for Testing TP67P in Series-Compensated Applications With a Multiple of Pickup of 1.5 (Sheet 2 of 2)

Relay Input	Prefault[a]		Incremental Value		Fault	
	Magnitude	Angle	Magnitude	Angle	Magnitude	Angle
IB	2.00 A	–120.0°	1.81 A	180.0°	3.30 A	–148.3°
IC	2.00 A	120.0°	0.0 A	N/A	2.00 A	120.0°

[a] Apply transition time t_0 = 750.0 ms.

TEST 5. TD32ZF Threshold and TD32 Forward Operation

This test uses a synthetic forward AG fault, resulting in an incremental replica loop current equal to the **TP67G** setting, and varies the incremental voltage to verify the **TD32ZF** setting. Calculate the test incremental signals through use of *Equation 11.9*:

$$\begin{aligned} \Delta IA &= TP67G \bullet |D| \bullet 1\angle IA_{PRE} \\ \Delta IB &= 0 \\ \Delta VA &= -\beta \bullet TD32ZF \bullet TP67G \bullet 1\angle Z1ANG \bullet 1\angle IA_{PRE} \\ \Delta VB &= 0 \end{aligned}$$

Equation 11.9

Use β = 2 (the impedance of the system behind the relay is 200 percent of the **TD32ZF** setting) and calculate and apply test signals per *Equation 11.1* with the incremental quantities per *Equation 11.9*. Verify that the TD32FA Relay Word bit asserted a few milliseconds after you applied the fault quantities.

Also verify that a permissive trip bit (TMB1P*n*, where *n* = 1, 2, 3, or 6) asserts if you enabled POTT on any of the MIRRORED BITS ports. You would also typically want to verify that the remote relay received this bit (RMB1P*n*). Such a test covers the transmit and receive functions of both the local and remote relays as well as the MIRRORED BITS channel.

Use β = 0.5 (the impedance of the system behind the relay is 50 percent of the **TD32ZF** setting) and calculate and apply test signals per *Equation 11.1* with the incremental quantities per *Equation 11.9*. Verify that the TD32FA Relay Word bit did not assert permanently for the duration of the START Relay Word bit after you applied the fault quantities. The TD32FA Relay Word bit may assert briefly (1–2 ms) at the beginning of the disturbance before the TD32 logic develops the forward restraining torque from the incremental current and the TD32ZF setting.

This test proves that the intended **TD32ZF** setting is in effect and that the TD32 element responds correctly to disturbances in the forward direction.

Table 11.9 shows the prefault, incremental, and fault test voltages and currents for β = 2 in the present numerical example.

Table 11.9 Prefault, Incremental, and Fault Signals for Testing TD32ZF With a Multiple of Pickup of 2 (Sheet 1 of 2)

Relay Input	Prefault[a]		Incremental Value		Fault	
	Magnitude	Angle	Magnitude	Angle	Magnitude	Angle
VA	66.4 V	0.0°	16.0 V	–94.0°	67.2 V	–13.7°
VB	66.4 V	–120.0°	0.0 V	N/A	66.4 V	–120.0°
VC	66.4 V	120.0°	0.0 V	N/A	66.4 V	120.0°

Table 11.9 Prefault, Incremental, and Fault Signals for Testing TD32ZF With a Multiple of Pickup of 2 (Sheet 2 of 2)

Relay Input	Prefault[a]		Incremental Value		Fault	
	Magnitude	Angle	Magnitude	Angle	Magnitude	Angle
IA	2.00 A	0.0°	2.41 A	0.0°	4.41 A	0.0°
IB	2.00 A	–120.0°	0.0 A	N/A	2.00 A	–120.0°
IC	2.00 A	120.0°	0.0 A	N/A	2.00 A	120.0°

[a] Apply transition time t_0 = 750.0 ms.

TEST 6. TD32ZR Threshold and TD32 Reverse Operation

This test uses a synthetic reverse AG fault, resulting in an incremental loop replica current equal to the **TP67G** setting, and varies the incremental voltage to verify the **TD32ZR** setting. Calculate the test incremental signals through use of *Equation 11.10*:

$$\begin{aligned} \Delta IA &= TP67G \bullet |D| \bullet 1\angle IA_{PRE} \\ \Delta IB &= 0 \\ \Delta VA &= \beta \bullet TD32ZR \bullet TP67G \bullet 1\angle Z1ANG \bullet 1\angle IA_{PRE} \\ \Delta VB &= 0 \end{aligned}$$

Equation 11.10

Use β = 2 (the impedance of the system in front of the relay is 200 percent of the **TD32ZR** setting) and calculate and apply test signals per *Equation 11.1* with the incremental quantities per *Equation 11.10*. Verify that the TD32RA Relay Word bit asserted a few milliseconds after you applied the fault quantities.

Use β = 0.5 (the impedance of the system in front of the relay is 50 percent of the **TD32ZR** setting) and calculate and apply test signals per *Equation 11.1* with the incremental quantities per *Equation 11.10*. Verify that the TD32RA Relay Word bit did not assert permanently for the duration of the START Relay Word bit after you applied the fault quantities. The TD32RA Relay Word bit may assert briefly (1–2 ms) at the beginning of the disturbance before the TD32 logic develops the reverse restraining torque from the incremental current and the TD32ZR setting.

This test proves that the intended **TD32ZR** setting is in effect and that the TD32 element responds correctly to disturbances in the reverse direction.

Table 11.10 shows the prefault, incremental, and fault test voltages and currents for β = 2 in the present numerical example.

Table 11.10 Prefault, Incremental, and Fault Signals for Testing TD32ZR With a Multiple of Pickup of 2 (Sheet 1 of 2)

Relay Input	Prefault[a]		Incremental Value		Fault	
	Magnitude	Angle	Magnitude	Angle	Magnitude	Angle
VA	66.4 V	0.0°	24.0 V	86.0°	72.2 V	19.4°
VB	66.4 V	–120.0°	0.0 V	N/A	66.4 V	–120.0°
VC	66.4 V	120.0°	0.0 V	N/A	66.4 V	120.0°
IA	2.00 A	0.0°	2.41 A	0.0°	4.41 A	0.0°

Table 11.10 Prefault, Incremental, and Fault Signals for Testing TD32ZR With a Multiple of Pickup of 2 (Sheet 2 of 2)

Relay Input	Prefault[a]		Incremental Value		Fault	
	Magnitude	Angle	Magnitude	Angle	Magnitude	Angle
IB	2.00 A	–120.0°	0.0 A	N/A	2.00 A	–120.0°
IC	2.00 A	120.0°	0.0 A	N/A	2.00 A	120.0°

[a] Apply transition time t_0 = 750.0 ms.

TEST 7. TD21G Reach and Operating Time

This test uses a synthetic forward zero-resistance AG fault at the distance *m* in per unit of the line length and with a system impedance behind the relay equal to 110 percent of the **TD32ZF** setting. Apply faults 15 percent beyond the intended reach and 30 percent short of the intended reach to verify the **TD21MG** reach setting. Consider faults at 0 percent and 50 percent of the set reach to verify the element operating time.

Calculate the following values for the assumed value of *m*:

$$VF = VA_{PRE} - IA_{PRE} \bullet m \bullet Z1MAG \bullet 1\angle Z1ANG$$

$$\Delta I = \frac{VF \bullet 1\angle -Z1ANG}{m \bullet Z1MAG + 1.1 \bullet TD32ZF}$$

Equation 11.11

Calculate the test incremental signals through use of *Equation 11.12*:

$$\Delta IA = \Delta I \bullet D$$
$$\Delta IB = 0$$
$$\Delta VA = -\Delta I \bullet 1.1 \bullet TD32ZF \bullet 1\angle Z1ANG$$
$$\Delta VB = 0$$

Equation 11.12

Note that the ΔIA current angle differs from the IA_{PRE} current angle—you will need to recalculate the transition time you used in previous tests (per *Equation 11.4*).

Using *m* = 1.15 • **TD21MG** (AG fault 15 percent beyond the reach point), calculate and apply test signals per *Equation 11.1* with the incremental quantities per *Equation 11.12*. Verify that the TD21AG Relay Word bit did not assert after you applied the fault quantities.

Using *m* = 0.70 • **TD21MG** (AG fault 30 percent short of the reach point), calculate and apply test signals per *Equation 11.1* with the incremental quantities per *Equation 11.12*. Verify that the TD21AG Relay Word bit asserted a few milliseconds after you applied the fault quantities. If the element does not operate for this test condition, inspect your **TD21MG** setting. If the setting is correct, inspect the OC21AG Relay Word bit. If this bit does not assert during the test, you have attempted to apply the TD21G in a weak system for which the TD21 element may not be applicable.

Optionally, using *m* = 0.50 • **TD21MG** (AG fault in the middle of the TD21G zone) and using *m* = 0 (AG fault in front of the relay), calculate and apply test signals per *Equation 11.1* with the incremental quantities per *Equation 11.12*. Verify the operating time of the TD21AG Relay Word bit by comparing it with your requirements and expectations.

You can observe the TD21G Relay Word bit to monitor the ground TD21 element in Phase A, B, or C.

Table 11.11 shows the prefault, incremental, and fault test voltages and currents for $m = 0.49$ (fault location 30 percent short of TD21MG reach) in the present numerical example. In this example, you will calculate the following values:

$$VF = 66.4\ V\angle{-8.5°}$$
$$\Delta I = 9.36\ A\angle{-94.6°}$$

Table 11.11 Prefault, Incremental, and Fault Signals for Testing TD21MG for a Fault Location 30 Percent Short of the Reach

Relay Input	Prefault[a]		Incremental Value		Fault	
	Magnitude	Angle	Magnitude	Angle	Magnitude	Angle
VA	66.4 V	0.0°	20.6 V	171.5°	46.2 V	3.8°
VB	66.4 V	–120.0°	0.0 V	N/A	66.4 V	–120.0°
VC	66.4 V	120.0°	0.0 V	N/A	66.4 V	120.0°
IA	2.00 A	0.0°	5.63 A	–88.5°	6.03 A	–69.1°
IB	2.00 A	–120.0°	0.0 A	N/A	2.00 A	–120.0°
IC	2.00 A	120.0°	0.0 A	N/A	2.00 A	120.0°

[a] Apply transition time t_0 = 754.1 ms (determined as t_0 = (45 cycles – (–88.5°)/360°)/60 Hz = 0.7541 s, or 754.1 ms, for a 60 Hz system).

TEST 8. TD21P Reach and Operating Time

This testing procedure is similar to the procedure for the TD21G element (*TEST 7. TD21G Reach and Operating Time*). Calculate the following values for the assumed value of *m*:

$$VF = VA_{PRE} - VB_{PRE} - (IA_{PRE} - IB_{PRE}) \bullet m \bullet Z1MAG \bullet 1\angle Z1ANG$$
$$\Delta I = \frac{VF \bullet 1\angle{-Z1ANG}}{m \bullet Z1MAG + 1.1 \bullet TD32ZF}$$

Equation 11.13

Calculate the test incremental signals through use of *Equation 11.14*:

$$\Delta IA = 0.5 \bullet \Delta I$$
$$\Delta IB = -\Delta IA$$
$$\Delta VA = -\Delta I \bullet 0.55 \bullet TD32ZF \bullet 1\angle Z1ANG$$
$$\Delta VB = -\Delta VA$$

Equation 11.14

Note that the ΔIA current angle differs from the IA_{PRE} current angle—you will need to recalculate the transition time you used in previous tests (per *Equation 11.4*).

Using $m = 1.15$ • **TD21MP** (AB fault 15 percent beyond the reach point), calculate and apply test signals per *Equation 11.1* with the incremental quantities per *Equation 11.14*. Verify that the TD21AB Relay Word bit did not assert after you applied the fault quantities.

Using $m = 0.70 \bullet$ **TD21MP** (AB fault 30 percent short of the reach point), calculate and apply test signals per *Equation 11.1* with the incremental quantities per *Equation 11.14*. Verify that the TD21AB Relay Word bit asserted a few milliseconds after you applied the fault quantities. If the element does not operate for this test condition, inspect your **TD21MP** setting. If the setting is correct, inspect the OC21AB Relay Word bit. If this bit does not assert during the test, you attempted to apply the TD21P in a weak system for which the TD21 element may not be applicable.

Optionally, using $m = 0.50 \bullet$ **TD21MP** (AB fault in the middle of the TD21P zone) or using $m = 0$ (AB fault in front of the relay), calculate and apply test signals per *Equation 11.1* with the incremental quantities per *Equation 11.14*. Verify the operating time of the TD21AB Relay Word bit by comparing it with your requirements and expectations.

You can observe the TD21P Relay Word bit to monitor the phase TD21 element in loop AB, BC, or CA.

Table 11.12 shows the prefault, incremental, and fault test voltages and currents for $m = 0.525$ (fault 30 percent short of the TD21MP reach) in the present numerical example. In this example, you will calculate the following values:

$$VF = 115.2\ V\angle 20.9°$$
$$\Delta I = 15.46\ A\angle -65.1°$$

Table 11.12 Prefault, Incremental, and Fault Signals for Testing TD21MP for a Fault Location 30 Percent Short of the Reach

Relay Input	Prefault[a]		Incremental Value		Fault	
	Magnitude	Angle	Magnitude	Angle	Magnitude	Angle
VA	66.4 V	0.0°	17.0 V	–159.1°	50.9 V	–6.9°
VB	66.4 V	–120.0°	17.0 V	20.9°	54.3 V	–108.6°
VC	66.4 V	120.0°	0.0 V	N/A	66.4 V	120.0°
IA	2.00 A	0.0°	7.73 A	–65.1°	8.76 A	–53.2°
IB	2.00 A	–120.0°	7.73 A	114.9°	6.78 A	128.9°
IC	2.00 A	120.0°	0.0 A	N/A	2.00 A	120.0°

[a] Apply transition time t_0 = 753.0 ms.

TEST 9A. Permissive Overreaching Transfer Trip Scheme (End-to-End Test)

If you perform end-to-end testing for the POTT scheme, consider this test procedure. The procedure is written for two-terminal POTT applications, but you can adapt it to three- and four-terminal applications.

You may consider using prefault currents with equal magnitudes and opposite directions for the two relays in the POTT scheme.

Testing for an Internal Fault

Calculate the test incremental signals through use of *Equation 11.15*:

$$\begin{aligned} \Delta IA &= 2 \bullet TP67G \bullet |D| \bullet 1\angle IA_{PRE} \\ \Delta IB &= 0 \\ \Delta VA &= -4 \bullet TD32ZF \bullet TP67G \bullet 1\angle Z1ANG \bullet 1\angle IA_{PRE} \\ \Delta VB &= 0 \end{aligned}$$

Equation 11.15

Use *Equation 11.15* to calculate the test incremental signals for both relays, using their respective settings. Calculate and apply test signals per *Equation 11.1* with the incremental quantities per *Equation 11.15* through use of two time-synchronized test sets. Verify that the POTT scheme operated for this test condition (Relay Word bit RXPRM).

Table 11.13 shows the prefault, incremental, and fault test voltages and currents for the forward fault and settings per *Table 11.1* in the present numerical example.

Table 11.13 Prefault, Incremental, and Fault Signals for Testing POTT for a Forward Fault

Relay Input	Prefault[a]		Incremental Value		Fault	
	Magnitude	Angle	Magnitude	Angle	Magnitude	Angle
VA	66.4 V	0.0°	32.0 V	–94.0°	71.7 V	–26.5°
VB	66.4 V	–120.0°	0.0 V	N/A	66.4 V	–120.0°
VC	66.4 V	120.0°	0.0 V	N/A	66.4 V	120.0°
IA	2.00 A	0.0°	4.82 A	0.0°	6.82 A	0.0°
IB	2.00 A	–120.0°	0.00 A	N/A	2.00 A	–120.0°
IC	2.00 A	120.0°	0.00 A	N/A	2.00 A	120.0°

[a] Apply transition time t_0 = 750.0 ms.

Testing for an External Fault

Use *Equation 11.15* to calculate the test incremental signals for the relay that sees the fault in the forward direction, and use *Equation 11.16* to calculate the test incremental signals for the relay that sees the fault in the reverse direction:

$$\begin{aligned} \Delta IA &= 2 \bullet TP67G \bullet |D| \bullet 1\angle IA_{PRE} \\ \Delta IB &= 0 \\ \Delta VA &= 4 \bullet TD32ZR \bullet TP67G \bullet 1\angle Z1ANG \bullet 1\angle IA_{PRE} \\ \Delta VB &= 0 \end{aligned}$$

Equation 11.16

Use *Equation 11.15* and *Equation 11.16* to calculate the test incremental signals for both relays, using their respective settings. Calculate and apply test signals per *Equation 11.1* with the incremental quantities per *Equation 11.15* and *Equation 11.16* through use of two time-synchronized test sets. Verify that the relay with test signals per *Equation 11.15* transmits a permissive trip signal (i.e., asserts Relay Word bit KEYA). Verify that the POTT scheme did not operate for this test condition (Relay Word bit RXPRM).

If you first used *Equation 11.15* in Relay 1 and *Equation 11.16* in Relay 2, then recalculate the test signals by using *Equation 11.15* for Relay 2 and *Equation 11.16* for Relay 1, and repeat the test. Verify that the relay with test signals per *Equation 11.15* transmits a permissive trip signal (i.e., asserts Relay Word bit KEYA in Relay 2). Verify that the POTT scheme did not operate for this test condition (Relay Word bit RXPRM).

Table 11.14 shows the prefault, incremental, and fault test voltages and currents for the reverse fault and settings per *Table 11.1* in the present numerical example.

Table 11.14 Prefault, Incremental, and Fault Signals for Testing POTT for a Reverse Fault

Relay Input	Prefault[a]		Incremental Value		Fault	
	Magnitude	Angle	Magnitude	Angle	Magnitude	Angle
VA	66.4 V	0.0°	48.0 V	86.0°	84.6 V	34.5°
VB	66.4 V	–120.0°	0.0 V	N/A	66.4 V	–120.0°
VC	66.4 V	120.0°	0.0 V	N/A	66.4 V	120.0°
IA	2.00 A	0.0°	4.82 A	0.0°	6.82 A	0.0°
IB	2.00 A	–120.0°	0.00 A	N/A	2.00 A	–120.0°
IC	2.00 A	120.0°	0.00 A	N/A	2.00 A	120.0°

[a] Apply transition time t_0 = 750.0 ms.

TEST 9B. Permissive Overreaching Transfer Trip Scheme (Loopback)

You can verify dependability of the POTT scheme by putting the MIRRORED BITS port used for the POTT scheme in the **LOOP DATA** mode (see *Loopback Testing on page 3.14*) and applying a forward fault through use of test signals per *Equation 11.15*. The POTT scheme should operate for these test conditions.

TEST 10. Single-Ended Impedance-Based Fault Locating

Apply *TEST 7. TD21G Reach and Operating Time* or *TEST 8. TD21P Reach and Operating Time* to test accuracy of the single-ended impedance-based fault-locating algorithm. Compare the test fault location *m* • **LL** with the result the relay reported. You can view the single-ended fault location result in the header (.HDR) file of the event record (see *Section 5: Fault and Event Recording*).

TEST 11. Double-Ended Impedance-Based Fault Locating

Apply test signals per *Equation 11.13* and *Equation 11.14* to the first relay in the scheme. *Table 11.15* shows the prefault, incremental, and fault test voltages and currents for Relay 1, assuming you want to test for the fault location *m* = 0.75 of the line length from Relay 1.

Table 11.15 Prefault, Incremental, and Fault Signals for Testing Double-Ended Impedance-Based Fault Locating in Relay 1 (Fault at 75 Percent of Line Length From Relay 1)

Relay Input	Prefault[a]		Incremental Value		Fault	
	Magnitude	Angle	Magnitude	Angle	Magnitude	Angle
VA	66.4 V	0.0°	13.2 V	–162.9°	54.0 V	–4.1°
VB	66.4 V	–120.0°	13.2 V	17.1°	57.5 V	–111.0°
VC	66.4 V	120.0°	0.0 V	N/A	66.4 V	120.0°
IA	2.00 A	0.0°	5.99 A	–68.9°	6.96 A	–53.3°
IB	2.00 A	–120.0°	5.99 A	111.1°	4.98 A	129.3°
IC	2.00 A	120.0°	0.00 A	N/A	2.00 A	120.0°

[a] Apply transition time t_0 = 753.2 ms.

Calculate the test signals for the second relay in the scheme as follows.

Calculate prefault values:

$$
\begin{aligned}
IA_{PRE(2)} &= -IA_{PRE(1)} \\
IB_{PRE(2)} &= -IB_{PRE(1)} \\
IC_{PRE(2)} &= -IC_{PRE(1)} \\
VA_{PRE(2)} &= VA_{PRE(1)} - Z1MAG \bullet 1\angle Z1ANG \bullet IA_{PRE(1)} \\
VB_{PRE(2)} &= VB_{PRE(1)} - Z1MAG \bullet 1\angle Z1ANG \bullet IB_{PRE(1)} \\
VC_{PRE(2)} &= VC_{PRE(1)} - Z1MAG \bullet 1\angle Z1ANG \bullet IC_{PRE(1)}
\end{aligned}
$$

Table 11.16 shows the prefault currents and voltages for Relay 2 in the present numerical example.

Table 11.16 Prefault Test Signals for Relay 2

Relay Input	Prefault	
	Magnitude	Angle
VA	68.0 V	–17.1°
VB	68.0 V	–137.1°
VC	68.0 V	102.9°
IA	2.00 A	180.0°
IB	2.00 A	60.0°
IC	2.00 A	–60.0°

Calculate incremental quantities by using VF and the incremental current (ΔI) from *Equation 11.13*, and the incremental currents and voltages from *Equation 11.14*. Use Relay 2 settings, and use (1 – *m*) for the per-unit fault location instead of *m*.

Table 11.17 shows the prefault, incremental, and fault test voltages and currents for Relay 2, assuming you want to test for the fault location *m* = 0.75 of the line length from Relay 1 (i.e., 0.25 of the line length from Relay 2). Remember that *Table 11.17* assumes Relay 2 settings as in *Table 11.1*.

Table 11.17 Prefault, Incremental, and Fault Signals for Testing Double-Ended Impedance-Based Fault Locating in Relay 2 (Fault at 25 Percent of Line Length From Relay 2)

Relay Input	Prefault[a]		Incremental Value		Fault	
	Magnitude	Angle	Magnitude	Angle	Magnitude	Angle
VA	68.0 V	–17.1°	27.2 V	–162.9°	48.0 V	–35.6°
VB	68.0 V	–137.1°	27.2 V	17.1°	45.1 V	–121.8°
VC	68.0 V	102.9°	0.0 V	N/A	68.0 V	102.9°
IA	2.00 A	180.0°	12.35 A	–68.9°	11.78 A	–78.0°
IB	2.00 A	60.0°	12.35 A	111.1°	13.70 A	104.6°
IC	2.00 A	–60.0°	0.00 A	N/A	2.00 A	–60.0°

[a] Apply transition time t_0 = 753.2 ms.

Execute the end-to-end test and compare the test fault location *m* • **LL** with the result Relay 1 reported, and compare the test fault location (1 – *m*) • **LL** with the result Relay 2 reported. You can view the double-ended fault location result in the header (.HDR) file of the event record (see *Section 5: Fault and Event Recording*).

Testing With Traveling Waves

SEL-T4287 Traveling-Wave Test System

The SEL-T4287 (see *Figure 11.4*) is a compact test set that generates current traveling waves (current steps) for testing traveling-wave (TW) protection elements and schemes and TW-based fault locating. Specify line length, traveling-wave line propagation time, fault location, and fault type to simulate TWs launched by a fault. Configure these basic parameters as well as the triggering mode through use of the front-panel HMI to simulate TWs at either one or two line terminals. You can use one SEL-T4287 to test the SEL-T400L in the laboratory, or two SEL-T4287 Test Systems with an absolute time reference to perform end-to-end testing on a transmission line.

You can use the SEL-T4287 to test the following functions of the relay:

- Traveling-wave differential protection scheme, TW87
- Traveling-wave directional element, TW32
- Single-ended and double-ended TW-based fault-locating methods
- Adaptive autoreclose cancel logic[1]
- Line monitoring logic.[1]

[1] Follow the same test method as for double-ended TW-based fault locating.

Figure 11.4 SEL-T4287 Traveling-Wave Test System

TEST 12. Testing the TW87 Scheme With the SEL-T4287

The TW87 scheme responds primarily to current TWs measured at the local and remote terminals and, for security, to other signals in the lower frequency spectrum (see *Traveling-Wave Differential Scheme on page 2.31*). The SEL-T400L provides a TW test mode to simplify testing of the TW87 scheme by temporarily removing the supervisory conditions that use the lower frequency spectrum in the currents and voltages (see *TWTEST on page C.19* and *Traveling-Wave Differential Scheme on page 2.31*). After you issue the **TWTEST** command, the TWTEST Relay Word bit asserts and the **ARMED** LED blinks, indicating that the relay is in the TW test mode. The TWTEST mode times out (expires) after 30 minutes (issue the **TWTEST C** command to terminate the test mode immediately).

When the relay is in TWTEST mode, the TW87 logic does not use supervision from incremental quantities and phasors, such as the following:

- Relay Word bit ALPARM supervision (all protection measurement loops armed)
- Overcurrent supervision

- Voltage polarity supervision for applications with XC = 0 or EXTSC = N settings
- Directionality supervision for applications with XC > 0 or EXTSC = Y settings

As a result, you only need to apply step-current signals to test the TW87 scheme. You can use a step-current generating source with two sets of three-phase outputs, such as the SEL-T4287, for this purpose. For end-to-end testing, you will also need a common time reference provided in IRIG format, such as from satellite-synchronized clocks.

Laboratory TW87 Bench-Testing

You can use a single SEL-T4287 to test both relays in the TW87 scheme when performing bench-testing in the laboratory. Therefore, you do not need a common time reference connected to the test set to perform these tests. Note that the trip outputs and POTT and DTT schemes are enabled even when the relays are in the TW test mode. Activate the BLK contact input of the two relays if you want to disable the trip outputs and the POTT and DTT protection communications schemes in both relays.

For these tests you need one SEL-T4287, as shown in *Figure 11.5*. Be sure that all the cables connecting the SEL-T4287 current outputs to the relay current inputs have the same length and the same wire gauge to preserve adequate accuracy of the output current TWs.

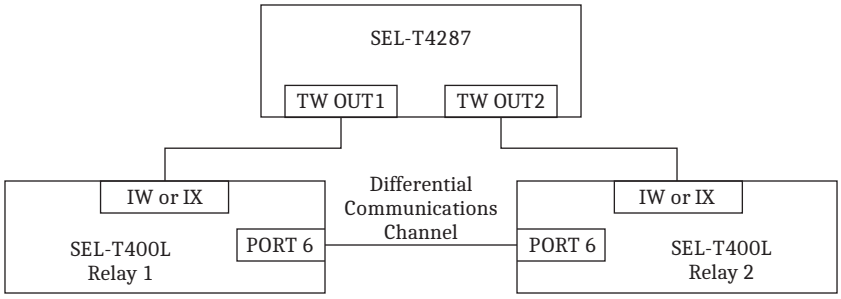

Figure 11.5 Configuration for Bench-Testing the TW87 Scheme and the Double-Ended TW-Based Fault-Locating Method

Testing TW87 Scheme Dependability With One SEL-T4287

Perform the following steps when testing the TW87 scheme for internal fault conditions through use of one SEL-T4287:

Step 1. Prepare the SEL-T400L Relays for testing as follows:

a. Verify that the TW87 scheme is enabled and configured (ETW87 and TWLPT settings) in Relay 1 and Relay 2.

b. Verify that the TR setting includes TW87.

c. Verify that Port 6 is enabled and configured (EPORT, 87TADR, and 87RADR settings) in both relays.

d. Connect the two relays through use of the direct point-to-point fiber-optic channel.

e. Verify that the **TW87OK** LED is illuminated green on each relay (indicating that the differential communications channel is operating correctly).

f. Connect the IW or IX terminals on Relay 1 to the **TW OUT1** outputs of the SEL-T4287, and the IW or IX terminals on Relay 2 to the **TW OUT2** outputs of the SEL-T4287. Select IW or IX terminals according to the corresponding LINEI settings in the SEL-T400L Relays.

g. Issue the **TWTEST** command to both relays. For security, you must acknowledge the **TWTEST** command on the relay front panel within 60 seconds of issuing the **TWTEST** command.

h. Verify that the **ARMED** LED is blinking on each relay (indicating that the two SEL-T400L Relays are in the TWTEST mode).

Step 2. Configure the SEL-T4287 Test System by performing the following:

a. Press the **MENU** pushbutton.

b. Set the line length, LL, equal to the LL setting in the SEL-T400L Relays.

c. Set the TW line propagation time, TWLPT, equal to the TWLPT setting in the SEL-T400L Relays.

d. Set the number of terminals (NTERM) to TWO.

e. Select the desired fault type, FLTYPE, for applying internal faults (e.g., INT AG for internal AG faults). The SEL-T4287 applies internal fault current TWs according to *Table 11.8*.

f. Select the desired fault location, FL, using the units specified by the LLUNIT setting in the SEL-T400L Relays.

g. Navigate to the `TRIG` menu on the LED display and select `RUN PB` to set the **ARM/RUN** pushbutton as the test trigger.

h. Press the **MENU** pushbutton; the display should indicate that the SEL-T4287 is `READY`.

i. Press the **ARM/RUN** pushbutton twice to trigger the test signals (the first press arms the SEL-T4287, and the second press triggers the test).

Table 11.18 Recommended Current TW Magnitudes for Testing Internal Faults[a]

Fault Type	TW OUT1			TW OUT2		
	IA	IB	IC	IA	IB	IC
INT AG	I_{TEST}	$-\frac{1}{2}I_{TEST}$	$-\frac{1}{2}I_{TEST}$	I_{TEST}	$-\frac{1}{2}I_{TEST}$	$-\frac{1}{2}I_{TEST}$
INT BG	$-\frac{1}{2}I_{TEST}$	I_{TEST}	$-\frac{1}{2}I_{TEST}$	$-\frac{1}{2}I_{TEST}$	I_{TEST}	$-\frac{1}{2}I_{TEST}$
INT CG	$-\frac{1}{2}I_{TEST}$	$-\frac{1}{2}I_{TEST}$	I_{TEST}	$-\frac{1}{2}I_{TEST}$	$-\frac{1}{2}I_{TEST}$	I_{TEST}

[a] Where $0.5 \cdot \leq I_{TEST} \leq 2 \cdot I_{NOM}$ is recommended; the SEL-T4287 uses I_{TEST} = 5 A.

Step 3. Verify that the following conditions are true for the SEL-T400L Relays:

➢ The **TRIP** LED is illuminated red on each relay (indicating trip operation).

➢ The **TW87** LED is illuminated red on each relay (indicating TW87 scheme operation).

➢ The fault location estimate is within 0.1 km (0.06 mi) of the programmed fault location, FL, in the SEL-T4287 (the fault location is reported on the relay LCD displays, and can also be accessed by issuing the **SUM** command).

Step 4. Monitor the TW87 and TWDD Relay Word bits in the SEL-T400L Relays when applying TW test signals. Use SYNCHROWAVE Event to visualize the phase and TW currents (from the MHR COMTRADE files) and Relay Word bits (from the TDR COMTRADE files). *Figure 11.6* shows the signal plots for an operation of the TW87 scheme for an internal AG fault at 50 km from Terminal 1 (the black and blue signals correspond to Relay 1 and Relay 2, respectively). The relays were set according to *Table 11.1*. As expected, the TW87 scheme operated correctly and the double-ended fault-locating method estimated the fault at 49.984 km from Terminal 1.

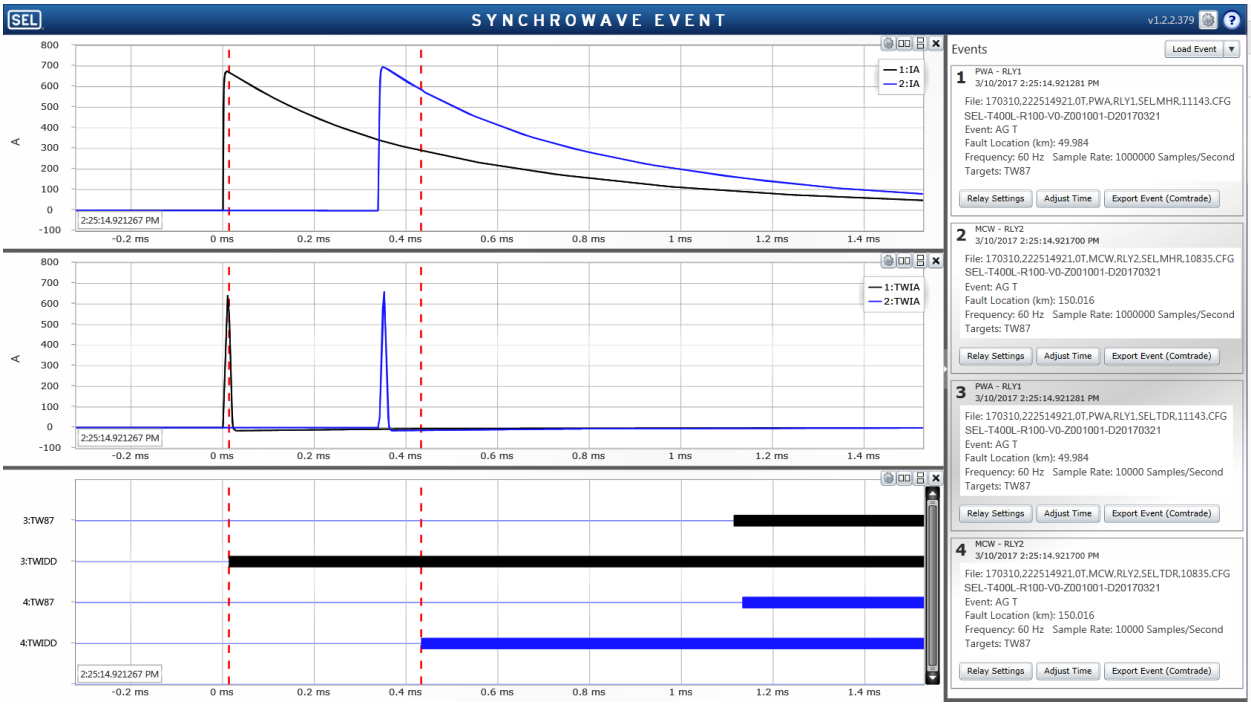

Figure 11.6 Injected Currents and Relay Word Bits Associated With the TW87 Scheme for an Internal AG Fault

Refer to *TEST 1. TP50G Pickup Setting on page 11.8* and *TEST 2. TP50P Pickup Setting on page 11.10* for information on testing the overcurrent supervision elements (TP50P and TP50G settings) of the TW87 scheme.

Testing TW87 Scheme Security With One SEL-T4287

Perform the following steps when testing the TW87 scheme for external fault conditions through use of the SEL-T4287:

Step 1. Prepare the SEL-T400L Relays for testing as in *Testing TW87 Scheme Dependability With One SEL-T4287 on page 11.25* with the following addition:

➢ Program the TWDD Relay Word bit in the ER setting. (Remove it after testing to avoid extremely sensitive triggering of event records.)

Step 2. Configure the SEL-T4287 as in *Testing TW87 Scheme Dependability With One SEL-T4287 on page 11.25* with the following exceptions:

- ➢ Select the desired fault type, FLTYPE, for applying external faults (e.g., EXT AG for external AG faults). The SEL-T4287 applies external faults according to *Table 11.19*. Note that the fault location setting of the SEL-T4287 plays no role during application of external faults.

Table 11.19 Recommended Current TW Magnitudes for Testing External Faults[a]

Fault Type	TW OUT1			TW OUT2		
	IA	IB	IC	IA	IB	IC
EXT AG	$-I_{TEST}$	$\frac{1}{2}I_{TEST}$	$\frac{1}{2}I_{TEST}$	I_{TEST}	$-\frac{1}{2}I_{TEST}$	$-\frac{1}{2}I_{TEST}$
EXT BG	$\frac{1}{2}I_{TEST}$	$-I_{TEST}$	$\frac{1}{2}I_{TEST}$	$-\frac{1}{2}I_{TEST}$	I_{TEST}	$-\frac{1}{2}I_{TEST}$
EXT CG	$\frac{1}{2}I_{TEST}$	$\frac{1}{2}I_{TEST}$	$-I_{TEST}$	$-\frac{1}{2}I_{TEST}$	$-\frac{1}{2}I_{TEST}$	I_{TEST}

[a] Where $0.5 \cdot I_{NOM} \leq I_{TEST} \leq 2 \cdot I_{NOM}$ is recommended; the SEL-T4287 uses I_{TEST} = 5 A.

Step 3. After triggering the test, verify that the following conditions are true for the SEL-T400L Relays:

- ➢ The TRIP LED is not illuminated on either relay.
- ➢ The TW87 LED is not illuminated on either relay.

Step 4. Monitor the TW87 and TWDD Relay Word bits when applying faults. Use SYNCHROWAVE Event to visualize the phase and TW currents (from the MHR COMTRADE files) and Relay Word bits (from the TDR COMTRADE files). *Figure 11.7* illustrates the operation of the TW87 scheme for an external AG fault behind Relay 1 (the black and blue signals correspond to Relay 1 and Relay 2, respectively). As expected, the scheme is secure for this external fault (note that the time between peaks corresponds to the TWLPT setting in *Table 11.1*).

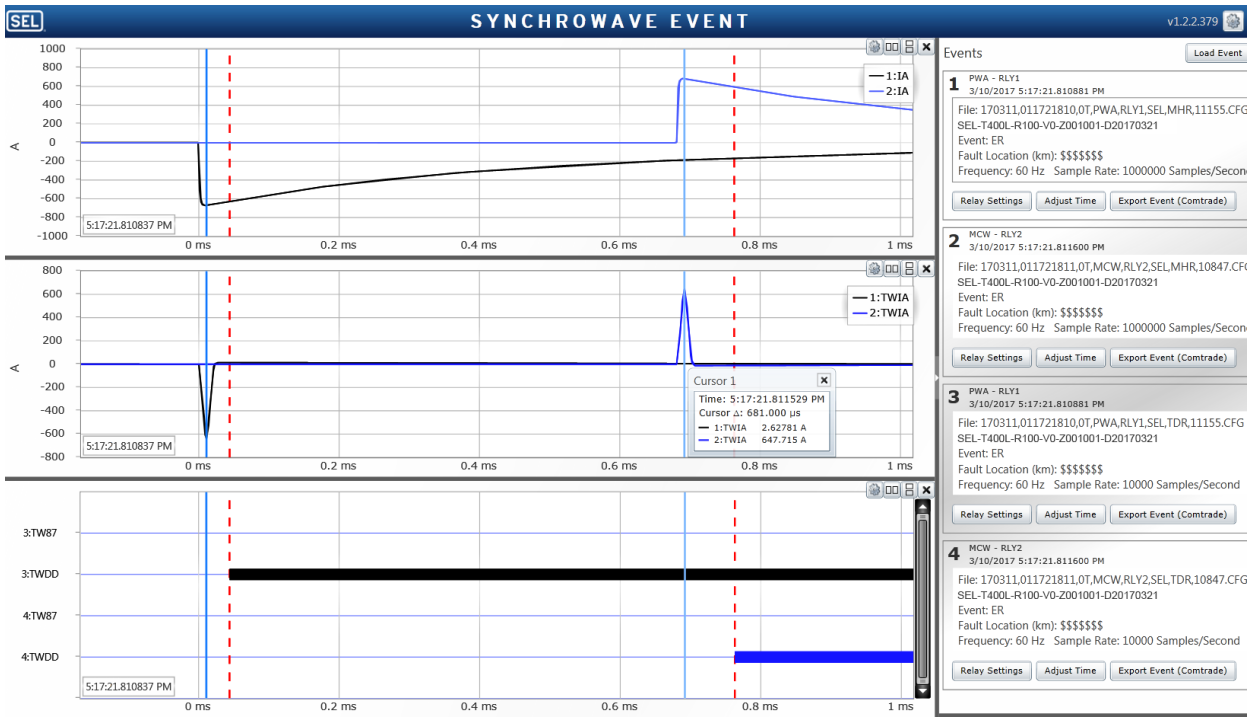

Figure 11.7 Injected Currents for an External AG Fault

When testing external faults, apply the time difference between the steps injected to both relays equal to TWLPT (with ±1 µs tolerance). For external faults, the steps applied to Relay 1 have different polarity than the steps applied to Relay 2. The SEL-T4287 applies current steps with a time difference of TWLPT with accuracy better than 1 µs.

End-to-End TW87 Testing

For end-to-end testing, connect an absolute time reference (typically, satellite-synchronized clocks via the IRIG input) to each of the current sources (SEL-T4287 Test Systems) at the two line terminals. Note that the trip outputs and POTT and DTT schemes are enabled even when the relays are in the TWTEST mode. Activate the BLK contact input of the SEL-T400L at each line terminal if you want to disable the trip outputs and protection communications schemes in both relays.

For these tests you need two SEL-T4287s connected to satellite-synchronized clocks, as shown in *Figure 11.8*. Be sure that all the cables connecting the SEL-T4287 current outputs to the relay current inputs are the same length and the same wire gauge to preserve accuracy of the TW test signals.

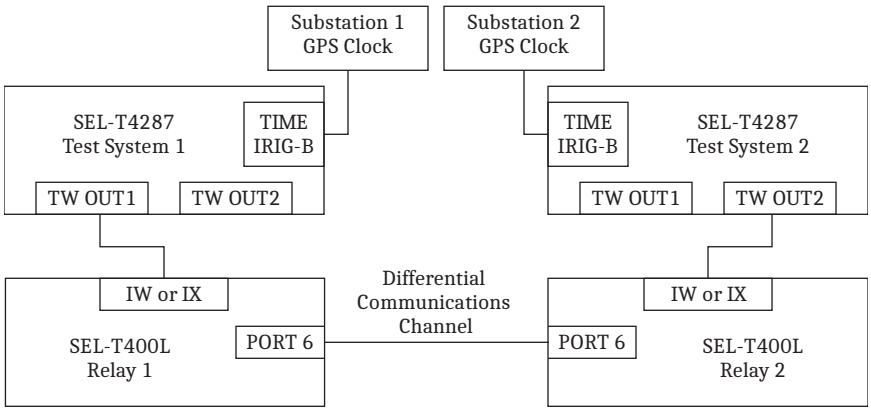

Figure 11.8 Configuration for End-to-End Testing of the TW87 Scheme and the Double-Ended TW-Based Fault-Locating Method

Testing TW87 Scheme Dependability

Perform the following steps when testing the TW87 scheme for internal fault conditions through use of the SEL-T4287:

Step 1. Prepare the SEL-T400L Relays for testing as follows:

a. Verify that the TW87 scheme is enabled and configured (ETW87 and TWLPT settings) in Relay 1 and Relay 2.

b. Verify that the TR setting includes TW87.

c. Verify that Port 6 is enabled and configured (EPORT, 87TADR, and 87RADR settings) in both relays.

d. Connect the two relays through use of the direct point-to-point fiber-optic channel.

e. Verify that the `TW87OK` LED is illuminated green on each relay (indicating that the differential communications channel is operating correctly).

f. Connect the demodulated IRIG output of the satellite-synchronized clock to the IRIG-B inputs of both relays. (This connection simplifies test result analysis; the TW87 scheme does not depend on the absolute time reference.)

g. Verify that the `TSOK` LED is illuminated green on both relays (indicating that the relays are time-synchronized to an absolute time reference).

h. Connect the IW or IX terminals on Relay 1 to the `TW OUT1` outputs of Test Set 1, and the IW or IX terminals on Relay 2 to the `TW OUT2` outputs of Test Set 2. Select IW or IX terminals according to the corresponding LINEI settings in the SEL-T400L Relays.

i. Issue the **TWTEST** command to both relays. For security, you must acknowledge the **TWTEST** command on the relay front panel within 60 seconds of issuing the **TWTEST** command.

j. Verify that the `ARMED` LED is blinking on each relay (indicating that the two SEL-T400L Relays are in the TWTEST mode).

Step 2. Configure the SEL-T4287 (both test sets accordingly) and establish necessary connections by performing the following actions:

a. Connect the demodulated IRIG output of the absolute time sources (satellite-synchronized clocks) to the IRIG-B inputs of both test sets.

b. Press the **MENU** pushbutton.

c. Set the line length, LL, equal to the LL setting in the SEL-T400L Relays.

d. Set the TW line propagation time, TWLPT, equal to the TWLPT setting in the SEL-T400L Relays.

e. Set the number of terminals (NTERM) to TWO.

f. Select the desired fault type, FLTYPE, for applying internal faults (e.g., INT AG for internal AG faults). The SEL-T4287 applies internal fault current TWs according to *Table 11.18*.

g. Select the desired fault location, FL, using the units specified by the LLUNIT setting in the SEL-T400L Relays. For example, for LL = 200, set FL = 60 in both relays.

h. Navigate to the `TRIG` menu on the LED display and select the `IRIG` option to select automatic triggering of the test signals through use of the absolute time reference.

i. In the `IRIG` menu, select the `SINGLE` option for applying a single fault.

j. Press the **ENT** pushbutton and set the fault time at least three minutes ahead of time for coordinating the fault injection at the two terminals. The trigger (fault) time should be set the same in both SEL-T4287 Test Systems.

k. Press the **ENT** pushbutton to save the fault time, and then press the **MENU** pushbutton until the display shows the countdown for applying the test signals. The test will be triggered at the time you specified.

Step 3. Verify that the following conditions are true for the SEL-T400L Relays:

➢ The **TRIP** LED is illuminated red on each relay (indicating trip operation).

➢ The **TW87** LED is illuminated red on each relay (indicating TW87 scheme operation).

➢ The fault location estimate is within 0.1 km (0.06 mi) of the programmed fault location, FL (the fault location is reported on the relay LCD displays, and can also be accessed by issuing the **SUM** command).

Step 4. Monitor the TW87 and TWDD Relay Word bits in the SEL-T400L Relays when applying TW test signals. Use SYNCHROWAVE Event to visualize the phase and TW currents (from the MHR COMTRADE files) and Relay Word bits (from the TDR COMTRADE files).

Testing TW87 Scheme Security

Perform the following steps when testing the TW87 scheme for external fault conditions through use of the SEL-T4287:

Step 1. Prepare the SEL-T400L Relays for testing as in *Testing TW87 Scheme Dependability on page 11.30* with the following addition:

- ➢ Program the TWDD Relay Word bit in the ER setting. Make sure to remove it after testing or else you will effectively apply a very sensitive event-recording trigger that may fill the relay memory very quickly.

Step 2. Configure the SEL-T4287 (both test sets accordingly) and establish necessary connections as in *Testing TW87 Scheme Dependability on page 11.30* with the following exception:

- ➢ Select the desired fault type, FLTYPE, for applying external faults (e.g., EXT AG for external AG faults). The SEL-T4287 applies external faults according to *Table 11.19*. Note that the fault location setting of the SEL-T4287 plays no role during application of external faults.

Step 3. After triggering the test, verify that the following conditions are true for the SEL-T400L Relays:

- ➢ The **TRIP** LED is not illuminated on either relay.
- ➢ The **TW87** LED is not illuminated on either relay.

Step 4. Monitor the TW87 and TWDD Relay Word bits when applying faults. Use SYNCHROWAVE Event to visualize the phase and TW currents (from the MHR COMTRADE files) and Relay Word bits (from the TDR COMTRADE files).

TEST 13. Testing the TW32 Element

The TW32 element, when enabled and asserted forward, keys the POTT permissive trip signals. The element does not supervise the received permissive trip signals; it only accelerates sending the permissive trip signals. The element has no other applications and requires no settings, and therefore you may consider simplified testing of the element. The TW32 element responds to current and voltage TWs measured at a given line terminal and, for security, requires all loops to be armed (see *Traveling-Wave Directional Element on page 2.27*). Simplify TW32 testing and use the TW test mode for temporarily removing these supervisory conditions (see *TWTEST on page C.19*). When the SEL-T400L operates in TWTEST mode, you need only to apply step-current signals and step-voltage signals to test the TW32 element. You can use one source capable of generating three-phase current and three-phase voltage steps for testing the TW32 element in one relay or two such sources with common time reference for testing the TW32 elements as part of the POTT scheme.

Laboratory Bench-Testing and Field Testing

The SEL-T4287 generates six current TWs. To obtain voltage TWs, connect the voltage module (included with the test set) directly to one of the SEL-T4287 TW outputs. When attached to the SEL-T4287, the voltage module connects internal resistors (noninductive, 1 ohm, 0.25 watt, and 1 percent tolerance) to short the TW current outputs. Current TWs flowing through the resistors results in voltage TW outputs that you should connect to the SEL-T400L voltage inputs. *Figure 11.9* shows the front side of the voltage module with external connection points for test leads (red and black terminals) and internal resistors (dotted lines).

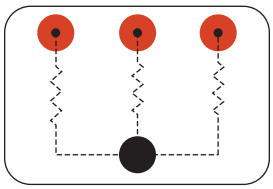

Figure 11.9 Voltage Module External Connection Points for Test Leads and Internal Connections of Resistors

Figure 11.10 shows the configuration for using one SEL-T4287 with the voltage module to test the TW32 element.

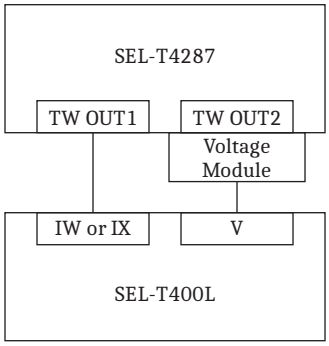

Figure 11.10 SEL-T4287 Configuration for Testing the TW32 Element

Testing TW32 Element Operation for Forward Faults

Perform the following steps when testing the TW32 element for forward fault conditions through use of one SEL-T4287:

Step 1. Prepare the SEL-T400L Relay for testing as follows:

a. Verify that the TW32 element is enabled (ETW32 = Y).

b. Program the TWDD Relay Word bit in the ER setting. (Remove it after testing to avoid extremely sensitive triggering of event records.)

c. Connect the **TW OUT1** outputs of the test set to the IW or IX terminals on the relay according to the LINEI setting in the SEL-T400L.

d. Connect the voltage module to the **TW OUT2** outputs of the test set.

e. Connect the terminals of the voltage module to the voltage inputs of the relay, as shown in *Figure 11.11*. This connection ensures that the relay voltage TWs and the relay current TWs are of opposite polarities.

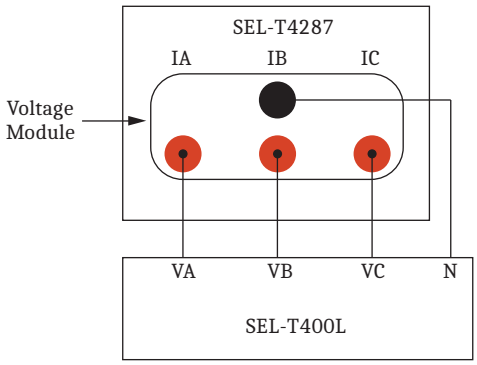

Figure 11.11 Connections for Generating Voltage TWs for Forward Faults

f. Issue the **TWTEST** command to the relay. For security, you must acknowledge the **TWTEST** command on the relay front panel within 60 seconds of issuing the **TWTEST** command.

g. Verify that the **ARMED** LED is blinking on the relay (indicating that the SEL-T400L Relay is in the TWTEST mode).

Step 2. Configure the SEL-T4287 Test System by performing the following:

a. Press the **MENU** pushbutton.

b. Set the line length, LL, equal to the LL setting in the SEL-T400L Relay.

c. Set the TW line propagation time, TWLPT, equal to the TWLPT setting in the SEL-T400L Relay.

d. Set the number of terminals (NTERM) to ONE.

e. Select the desired fault type, FLTYPE, for applying internal faults (e.g., INT AG for internal AG faults).

f. Program FL = 0 for simulating faults in front of the relay at a distance of 0 km/mi. This step is critical because it ensures the current TWs and the voltage TWs are generated at exactly the same time.

NOTE: When using one SEL-T4287 with the voltage module to test the TW32 element for a forward or reverse fault condition, set the test set for NTERM = ONE; FL = 0; and FLTYPE = INT AG, INT BG, or INT CG.

g. Navigate to the `TRIG` menu on the LED display and select `RUN PB` to set the **ARM/RUN** pushbutton as the test trigger.

h. Press the **MENU** pushbutton; the display should indicate that the SEL-T4287 is `READY`.

i. Press the **ARM/RUN** pushbutton twice to trigger the test signals (the first press arms the SEL-T4287, and the second press triggers the test).

Step 3. Monitor the TW32 element in the SEL-T400L Relay when applying faults. Use SYNCHROWAVE Event to visualize the current and voltage TWs (from the MHR COMTRADE files) and Relay Word bits (from the TDR COMTRADE files). *Figure 11.12* shows the operation of the TW32 element for a forward AG fault.

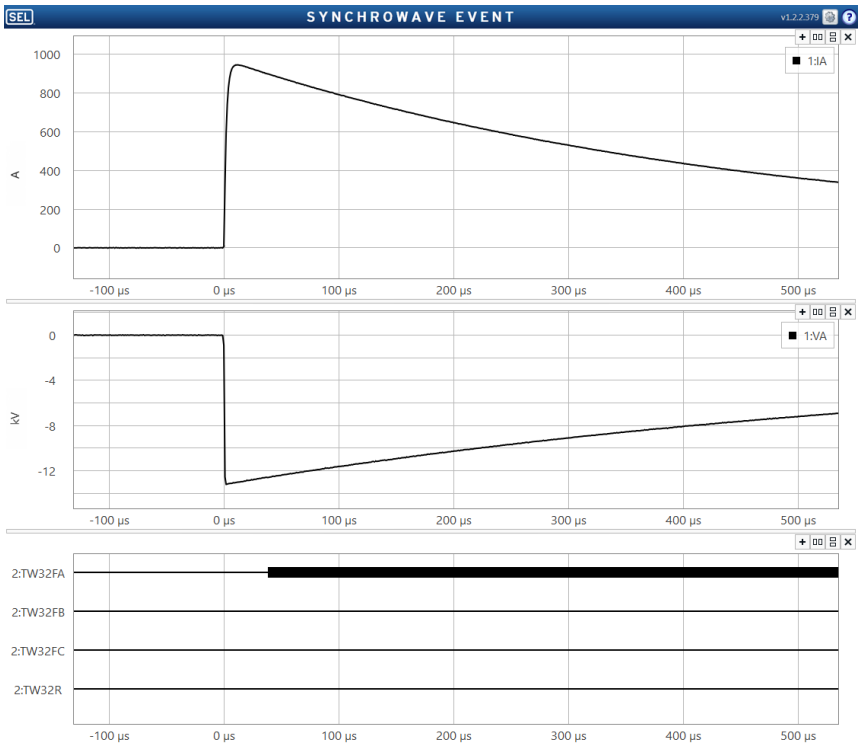

Figure 11.12 Injected Currents, Voltages, and TW32 Element Operation for a Forward AG Fault

Testing TW32 Element Operation for Reverse Faults

Perform the following steps when testing the TW32 element for reverse fault conditions through use of one SEL-T4287:

Step 1. Prepare the SEL-T400L Relay as in *Testing TW32 Element Operation for Forward Faults on page 11.33* with the following exception:

➢ Connect the terminals of the voltage module to the voltage inputs of the relay, as shown in *Figure 11.13*. Double-check the phase connections from the test set to the relay. This connection ensures the relay voltage TWs and the relay current TWs are of the same polarity.

NOTE: This connection is identical to that in *Figure 11.11*, except the voltage module is plugged into the SEL-T4287 in the reverse position (return terminal down) to apply the reverse fault test condition.

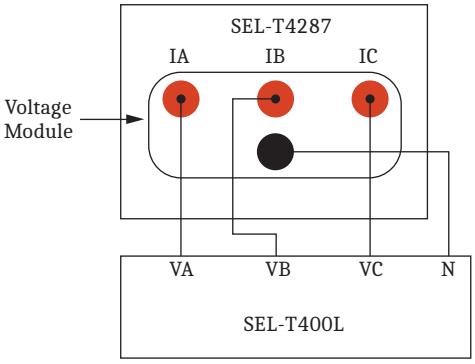

Figure 11.13 Connections for Generating Voltage TWs for Reverse Faults

Step 2. Configure the SEL-T4287 Test System as in *Testing TW32 Element Operation for Forward Faults on page 11.33*.

Step 3. Monitor the TW32 element in the SEL-T400L Relay when applying faults. Use SYNCHROWAVE Event to visualize the current and voltage TWs (from the MHR COMTRADE files) and Relay Word bits (from the TDR COMTRADE files). *Figure 11.14* shows the operation of the TW32 element for a reverse AG fault.

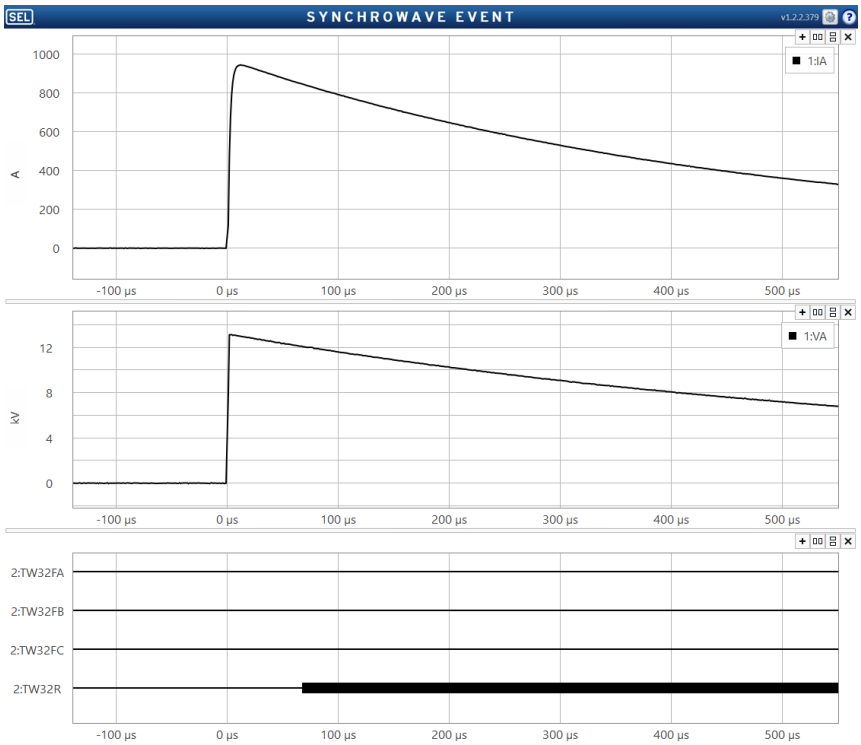

Figure 11.14 Injected Currents, Voltages, and TW32 Element Operation for a Reverse AG Fault

TEST 14. Testing Single-Ended Traveling-Wave-Based Fault Locating

The single-ended TW-based fault-locating method uses the TW reflection from the fault for estimating the fault location (see *Single-Ended Traveling-Wave-Based Method on page 4.9*). The relay reports the single-ended TW-based fault location if all of the following conditions are met:

1. The double-ended TW-based fault location estimation is not available.
2. The local terminal detects at least one reflected TW from the fault.
3. After detecting a TW reflected from the fault, the local terminal detects a corresponding reflection from the remote terminal, or neither of the impedance-based fault-locating methods were able to estimate the fault location.

To test the single-ended TW-based fault-locating method, configure the SEL-T4287 for single-ended testing. Under this configuration, the SEL-T4287 generates two sets of current TWs with a time difference between them corresponding to the TW round-trip time for the TW reflection from the local bus to travel back to the fault location, reflect, and then return back to the local terminal.

Figure 11.15 shows the configuration for testing the single-ended TW-based fault-locating method through use of one SEL-T4287. This configuration is adequate for applications with LINEI = COMB. In applications in which LINEI =

IW or IX, temporarily change LINEI = COMB and remember to restore the original LINEI settings value after testing. When emulating a single terminal (SEL-T4287 setting NTERM = ONE), the SEL-T4287 injects two sets of TWs. The **TW OUT1** outputs test signals that simulate the first TWs launched by a fault and the **TW OUT2** outputs test signals that simulate the TWs reflected back from the fault. The fault location setting (FL) in the SEL-T4287 determines the separation time between the first TWs and the reflected TWs. When LINEI = COMB, the relay uses both currents and the line current includes both TWs.

Be sure that all the cables connecting the SEL-T4287 current outputs to the relay current inputs have the same length and the same wire gauge to preserve adequate accuracy of the TW test signals.

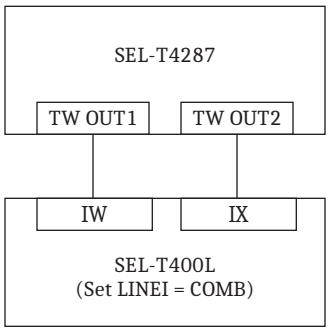

Figure 11.15 Configuration for Testing Single-Ended TW-Based Fault Locating Through Use of One SEL-T4287

Test Procedure

Perform the following steps when testing the single-ended TW-based fault-locating method through use of an SEL-T4287:

Step 1. Prepare the SEL-T400L Relay for testing as follows:

a. Set LINEI = COMB; with this setting, the relay responds to the sum of IW and IX signals, and therefore measures both TWs generated by the test set. (If the LINEI settings value prior to testing was not COMB, remember to restore the original LINEI setting value after testing.)

b. Set CTRX = CTRW. (If the CTRX and CTRW settings are different, remember to restore the true values after testing.)

c. Program the TWDD Relay Word bit in the FL setting. (Remove it after testing to avoid extremely sensitive triggering of event records.)

d. Connect the **TW OUT1** outputs of the SEL-T4287 to the IW terminals on the relay, and connect the **TW OUT2** outputs of the SEL-T4287 to the IX terminals on the relay.

Step 2. Configure the SEL-T4287 Test System by performing the following:

a. Press the **MENU** pushbutton.

b. Set the number of terminals (NTERM) to ONE.

c. Set the line length, LL, equal to the LL setting in the SEL-T400L Relay.

d. Set the TW line propagation time, TWLPT, equal to the TWLPT setting in the SEL-T400L Relay.

e. Select the desired fault type, FLTYPE, for applying internal faults (e.g., INT AG for internal AG faults). The SEL-T4287 applies internal fault current TWs according to *Table 11.18*.

f. Select the desired fault location, FL, using the units specified by the LLUNIT setting in the SEL-T400L Relays.

g. Navigate to the `TRIG` menu on the LED display and select `RUN PB` to set the **ARM/RUN** pushbutton as the test trigger.

h. Press the **MENU** pushbutton; the display should indicate that the SEL-T4287 is `READY`.

i. Press the **ARM/RUN** pushbutton twice to trigger the test signals (the first press arms the SEL-T4287, and the second press triggers the test).

Step 3. Monitor the Fault Location field in the SUMMARY report from the SEL-T400L Relay. For example, *Figure 11.16* shows a SUMMARY report for a single-ended fault location estimate of 50.002 (km) based on a simulated internal AG fault at 50 km from the local terminal.

```
SEL-T400L                                  Date: 2017/03/03  Time: 09:52:11.346
Station A                                  Time Source: HIRIG
                                           Serial Number: 1170231369

Event Number: 11988           Frequency: 60.002
Event Type: AG T
Targets: TD32 TW32 COMM

Fault Time: 09:52:11.3451

Fault Location: 50.002 km                                          Fault Location Estimate
```

Figure 11.16 SUMMARY Report for a Simulated Internal AG Fault at 50 km From the Local Terminal

Step 4. Monitor the currents received at the relay when applying faults. Use SYNCHROWAVE Event to visualize the current TWs (from the MHR COMTRADE files). *Figure 11.17* shows the line A-phase current and A-phase differentiator-smoother output signal. From the event report, determine the time difference between the two differentiator-smoother peaks to verify that you injected the TWs with a timing of double the travel time from the bus to the intended fault location. In this example, the time difference is approximately 341 µs, which is the round-trip travel time for a 100 km distance (2 • 50 km) with the TWLPT and LL parameters listed in *Table 11.1*.

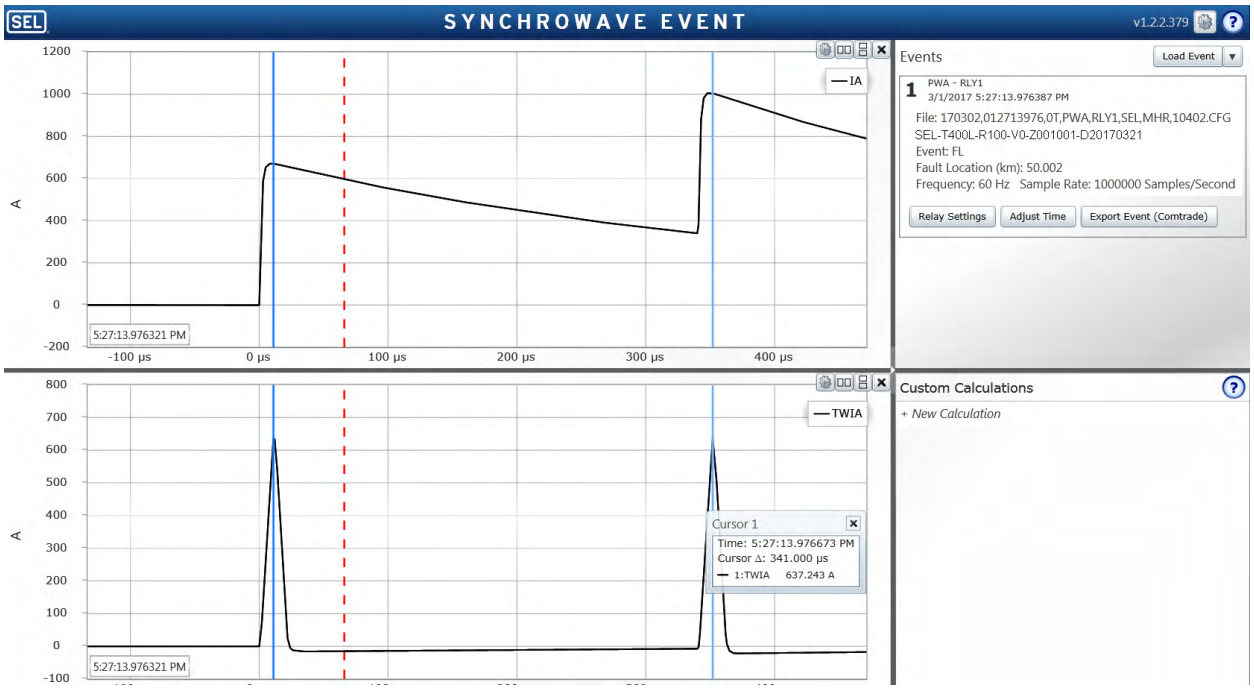

Figure 11.17 Injected A-Phase Current, A-Phase Differentiator-Smoother Output Signal (TWIA), and Single-Ended Fault Location Estimate for an Internal AG Fault at 50 km

Event Playback Testing

Use the event playback functionality to perform the following tasks:

- **Bench-testing of a single SEL-T400L Relay.** Obtain, convert, and upload as many as five test files to the relay. Execute a playback test on the selected test file and evaluate the results by inspecting relay targets and records. If necessary, modify the settings and repeat the test. If further testing is needed, upload a new batch of test files and execute additional playback tests.
- **Commissioning of a single SEL-T400L Relay.** Obtain and convert the intended test files prior to the onsite work. When on site, upload as many as five test files to the relay. Ensure that the relay outputs are isolated via test switches or disabled via the **Contact Outputs** and **Mirrored Bits** options in the event playback functionality. You do not need to isolate the relay current and voltage inputs for this test. Execute the playback test on the selected test file and evaluate results by inspecting relay targets and records. If further testing is needed, upload a new batch of test files and execute additional playback tests. If required, save the relay COMTRADE files to document the relay response to the playback tests.
- **Bench-testing of an SEL-T400L Relay scheme.** Obtain, convert, and upload as many as five test files to each of the relays in the scheme. Ensure that the protection communications channels are operational and error-free, and ensure that the **Mirrored Bits** playback option is selected to allow the operation of MIRRORED BITS outputs over all ports. When you are testing multiple relays, ensure that each relay is connected to the time source via the IRIG-B input. Verify that the TSOK Relay Word bit is asserted in all relays under test, select the test files corresponding to the same event in all relays

of the scheme, and schedule the playback test at the same time in each of the relays. When testing only two relays, you do not need the IRIG-B source if the differential communications channel (PORT 6) is available. In this case, you need to verify that the TW87OK LEDs are illuminated on both relays. Wait for the test to trigger and evaluate results by inspecting targets and records of each relay in the scheme. If necessary, modify settings and repeat the test. If further testing is needed, upload new batch of test files and execute additional playback tests.

- **Commissioning of an SEL-T400L Relay scheme.** Obtain and convert the intended test files prior to the onsite work. When on site, upload as many as five test files to the relay. Ensure that the relay outputs are isolated via test switches or disabled via the **Contact Outputs** option available in the event playback functionality. You do not need to isolate the relay current and voltage inputs for this test. Ensure that the protection communications channels are operational and error-free and the TSOK Relay Word bit is asserted in all relays under test. When testing only two relays, you do not need the IRIG-B source if the differential communications channel (PORT 6) is available. In this case, you need to verify that the TW87OK LEDs are illuminated on both relays. Ensure that the **Mirrored Bits** playback test option is selected to allow the operation of MIRRORED BITS outputs for testing the POTT scheme. Additionally, ensure that the breaker failure initiate signals are effectively isolated to prevent accidental breaker failure operation from your breaker failure relays. Select the test files corresponding to the same event in all relays of the scheme, and schedule the playback test at the same time at each site of the scheme. Wait for the test to trigger, and then evaluate results by inspecting targets and records of each relay in the scheme. If further testing is needed, upload new batch of test files and execute additional playback tests. If required, save the relay COMTRADE files to document the relay response to the playback tests.

Input Test File Requirements

The input file intended for playback testing should meet the following requirements:

- IEEE C37.111 COMTRADE file format.
- Single fixed sampling rate of 1, 2, 4, 8, or 10 kHz or 1, 2, 3, 4, or 5 MHz.
- Event duration between 0.1 s and 24 s (you will be able to play back up to 1.2 s of data).
- Voltage signals available in the file for selection as voltage relay inputs (VA, VB, and VC).
- Current signals available in the file for selection as current relay inputs (IAW, IBW, ICW, IAX, IBX, and ICX) according to the LINEI and OPCS relay settings.
- Units of the voltage channels: V or kV; units of the current channels: A or kA (the conversion utility ignores analog channels in the file with different units).
- Amplitude of the secondary pre-event steady-state Alpha-A voltage (VA–V0) signal calculated from the selected voltage relay inputs greater than 5 V.

- Frequency of the pre-event steady-state voltages as measured from the selected voltage relay inputs between 40 and 70 Hz.
- Pre-event steady-state voltages and currents selected as the relay inputs for at least 50 ms (strongly preferred, but not strictly necessary).

Playback Test Tools

You need the following tools to execute playback tests:

- A file format conversion utility to convert the input IEEE C37.111 COMTRADE file format into the .ply file format accepted by the SEL-T400L.
- A test file upload utility to send the .ply test file from your PC to the SEL-T400L.
- A test run utility to select one of the available test files in the relay, select test options, and initiate the playback test.

These tools are included in QuickSet and work when you are connected to the relay via Ethernet. Optionally, you can use the playback test feature without QuickSet by uploading the files via FTP (see *Using QuickSet on page 8.49*) and running playback tests using the **PLAY** command (see *PLAY on page C.12*).

Playback File Conversion Utility

The Playback File Conversion Utility converts COMTRADE files to the .ply file format that the SEL-T400L uses for playback. *Figure 11.18* shows the user interface of this utility.

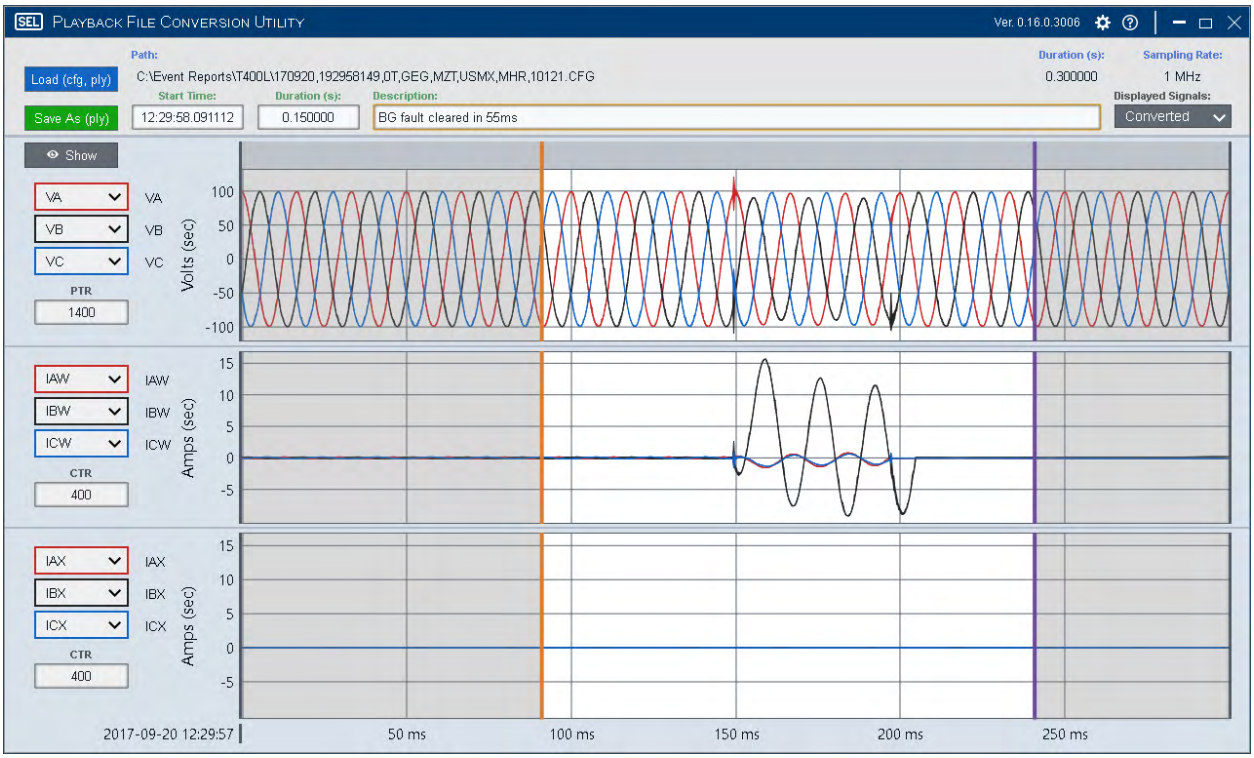

Figure 11.18 Playback File Conversion Utility User Interface

To launch the Playback File Conversion Utility, click **Tools > Event Playback** in QuickSet. This utility can also be launched as an independent program. Use this utility as follows:

Step 1. Click **Load** to open an IEEE C37.111 COMTRADE file for conversion or to open an already-converted playback file for inspection or to make modifications to it. The **Path** field displayed next to the **Load** button indicates the file location of the opened file. The duration of the original (input) file and its sampling rate are displayed as well (in the upper right of the file conversion utility screen).

The file conversion utility works with files with sampling rates of 1, 2, 4, 8, and 10 kHz and 1, 2, 3, 4, and 5 MHz. To obtain the SEL-T400L sampling rate of 1 MHz, the utility downsamples records with sampling rates above 1 MHz, and upsamples records with sampling rates below 1 MHz. When using a COMTRADE file with a sampling rate below 1 MHz, do not attempt to test the TW-based functions of the relay.

When obtaining your COMTRADE files via simulation, do not model the SEL-T400L input circuitry and anti-aliasing analog filters. Instead, when converting the simulation output file, click the settings button (in the upper right of the file conversion utility screen) and select the **Apply SEL-T400L Analog Filter** option. The file conversion utility will filter the original signals to model the SEL-T400L analog filters. Leave the **Apply SEL-T400L Analog Filter** option unselected when using files recorded in the field by relays or digital fault recorders. This option is only available for input files with sampling rates of 1, 2, 3, 4, and 5 MHz.

Step 2. Use the **VA** through **ICX** signal selection boxes to map the channels from the original (input) file to the analog input signals of the SEL-T400L under test. If you leave a channel unselected, the file conversion utility applies zero values to that channel in the test (output) file.

Step 3. Use the **Displayed Signals** drop-down menu to toggle between **Original** signals (resampled to 1 MHz) and **Converted** signals. The units of the original signals are in primary volts and amperes, and the units of the converted signals are in secondary volts and amperes. Use SYNCHROWAVE Event or other compatible COMTRADE viewing software to view the original signals without resampling.

Step 4. The PT and CT ratios are displayed for your convenience. Edit the **PTR** and **CTR** values to scale the converted signals if the ratios of the SEL-T400L under test are different than the ratios in the system in which the original record was recorded or simulated.

Step 5. Use the two cursors to select a subset of test data from the converted signals. The duration of the output .ply test file must be between 0.1 s and 1.2 s. To allow pre-event steady-state looping, you must provide at least 50 ms of steady-state pre-event data when selecting the duration within the converted signals. The file conversion utility uses the 50 ms of pre-event data to obtain one cycle of voltages and currents that the SEL-T400L loops in order to apply one second of steady-state signals previous to the event when playing back the test file.

Step 6. Click **Show** to zoom in to the selected region of the plot as identified by the left and right cursors.

The **Start Time** and **Duration** values of the output test file within the converted signals are shown in the numerical fields provided at the upper left of the file conversion utility screen. You can also use these fields directly to modify the **Start Time** and **Duration** values for the test data instead of using the cursors. Editing the **Duration** field moves the right cursor, i.e., the test end time.

Step 7. Use the **Description** field to enter any comments for the test file. These comments are embedded in the .ply file and are available to you in the **Event Playback Dashboard** when playing back the test file. It is good practice to describe your test files using this field.

Step 8. Once you have selected the channels to be mapped to the SEL-T400L analog inputs for playback as well as the **Start Time** and **Duration** values of the test data, click **Save As** to store the .ply test file.

When you click **Save As** and the pre-event voltage signals do not meet the frequency and amplitude requirements mentioned above, the file conversion utility cannot obtain the information that the SEL-T400L requires to generate one second of pre-event steady-state signals (steady-state looping). If the file duration is greater than or equal to 0.3 seconds, the utility converts the input file and you can use this file for playback testing without the steady-state looping. If the file duration is less than 0.3 seconds, you cannot use this file for playback testing and the file conversion utility will not convert the input file.

Preparing Multiple Test Files for End-to-End Testing

When testing a protection scheme, you will need a separate test file for each relay in the scheme. Follow one of these scenarios to obtain a test file for each relay in the scheme.

Multiple COMTRADE Files Containing Time-Synchronized Signals for Each Terminal of the Line

This scenario applies when your test signals come from multiple time-synchronized devices that each recorded currents and voltages at their terminals or from a transient simulation program that stored voltages and currents in multiple COMTRADE files (each one containing signals for one terminal of the line). To create a test file for each line terminal, load the COMTRADE file for the terminal of interest, select the test signals, select the test signal **Start Time** and **Duration**, and then save the test file. Repeat this procedure for each terminal of the line, and remember to apply the same **Start Time** (shown in the upper left of the file conversion utility screen) to ensure proper time alignment of the test signals during the end-to-end test. The **Duration** parameter does not have to be identical in all files, but it is good practice to keep the duration the same to simplify interpretation of the test results.

NOTE: When using multiple COMTRADE files to create multiple test files with time-synchronized data for scheme testing, ensure that the **Start Time** time stamp is the same for all test files.

A Single COMTRADE File Containing Both Local and Remote Signals

This scenario applies when your test signals come from an SEL-T400L equipped with the differential communications channel (PORT 6) that recorded both local and remote currents and voltages or from a transient simulation program that stored voltages and currents from all line terminals in a single COMTRADE file. To create a test file for each line terminal, use the file conversion utility to load the COMTRADE file, select the test signals for the line terminal of interest,

select the test signal **Start Time** and **Duration**, and save the test file for a given line terminal. Repeat this procedure for each terminal of the line, and remember to apply the same **Start Time** for each test file (shown in the upper left of the file conversion utility screen) to ensure proper time-alignment of the test signals during the end-to-end test. A convenient way to do this is to only change the signal mapping, description, and file name for each test file while keeping the **Start Time** and **Duration** values unchanged.

NOTE: When using a single COMTRADE file to create multiple test files for scheme testing, ensure the **Start Time** time stamp is the same for all test files.

Multiple COMTRADE Files Containing Signals for Each Terminal of the Line Without Time Alignment

This scenario applies when your test signals come from multiple field devices that each recorded currents and voltages at their terminals, but which were not time-synchronized during the event. Before proceeding, make sure that the multiple COMTRADE files you attempt to convert relate to the same power system event. Use the time of the power system event to align the records as follows:

- Records with a sampling rate less than 1 MHz allow you to test all protection functions other than the TW-based functions. In this case, you do not need to align the signals with microsecond accuracy. Place the right cursor in the file conversion utility on the first sample of the disturbance and place the left cursor 50 ms prior to the right cursor. Move the right cursor to obtain the desired test **Duration** and save the test file. Repeat this process for the other terminals in the scheme, remembering to keep the left cursor (test **Start Time**) at the same position respective to the first sample of the disturbance (50 ms or more) for each test file. As a result, the **Start Time** time stamps may not be the same, but the **Start Time** will be at the same time with respect to the power system event. If you do not intend to test the TW-based functions, you can apply the same procedure to records with a sampling rate of 1 MHz or higher.
- Records with a sampling rate of 1 MHz or higher allow you to test all protection functions, including the TW-based functions. In this case, you must align the signals with microsecond accuracy. The procedure differs depending on whether you are testing for internal faults or external events.
  - **Internal Faults.** To convert the COMTRADE files for testing internal faults, you will need the per-unit fault location for the terminal of interest (m) and the TWLPT setting for the protected line. Place the right cursor in the file conversion utility on the first sample of the disturbance and place the left cursor 50 ms + m • TWLPT prior to the right cursor. Move the right cursor to obtain the desired test **Duration** and save the test file. Repeat for the other terminal in the scheme, remembering to keep the left cursor (test **Start Time**) at the 50 ms + m • TWLPT position with respect to the first sample of the transient for each test file (note that the m value is the distance to fault from that terminal, and it is therefore different for each terminal). Because your alignment is manual, you may experience degraded accuracy of the TW fault-locating method during testing.
  - **External Events.** To convert the COMTRADE files for testing external events, start with the terminal closer to the external event. Place the right cursor in the file conversion utility on the first sample of the disturbance and place the left cursor 50 ms prior to the right cursor. Move the right cursor to the desired test **Duration** and save the converted file. Then load the COMTRADE file of the opposite terminal of the line, place the

right cursor in the file conversion utility on the first sample of the disturbance, and place the left cursor 50 ms + TWLPT prior to the right cursor. Move the right cursor to the desired test **Duration** and save the test file. You may encounter unexpected test results if you misalign the signals by mistaking the relay further from the event for the relay closer to the event. If so, convert the files again in the opposite sequence. If the test results are still unexpected, consider a more in-depth analysis of the event and identify the exact traveling waves that you may use for precise post-event alignment of COMTRADE files captured without time alignment. Consider using the SYNCHROWAVE Event utility for advanced analysis and manual alignment of relay records that are not time aligned. Alternatively, you may abstain from using this advanced testing scenario.

When using an event file recorded by an SEL-T400L with the differential communications channel (PORT 6) operational, you will have access only to the remote line current and not the individual relay input currents. If your application is a dual-breaker application, you may consider using the record from the remote relay to access the recorded IW and IX currents. Alternatively, you can map the line current to both the IW and IX inputs of the relay and use half of the actual CT ratio to effectively apply the same line current with the arbitrary equal contribution from both CTs of the dual-breaker scheme.

Event Playback Dashboard

NOTE: TW test mode is not required when playing back test files.

The **Event Playback Dashboard** (shown in *Figure 11.19*) is a part of QuickSet that allows you to select as many as five .ply test files, send them to the SEL-T400L, manage them in the relay, control playback test parameters, and execute playback tests on the uploaded test files. The **Event Playback Dashboard** is only available for SEL-T400L Relays with firmware version R102 or newer.

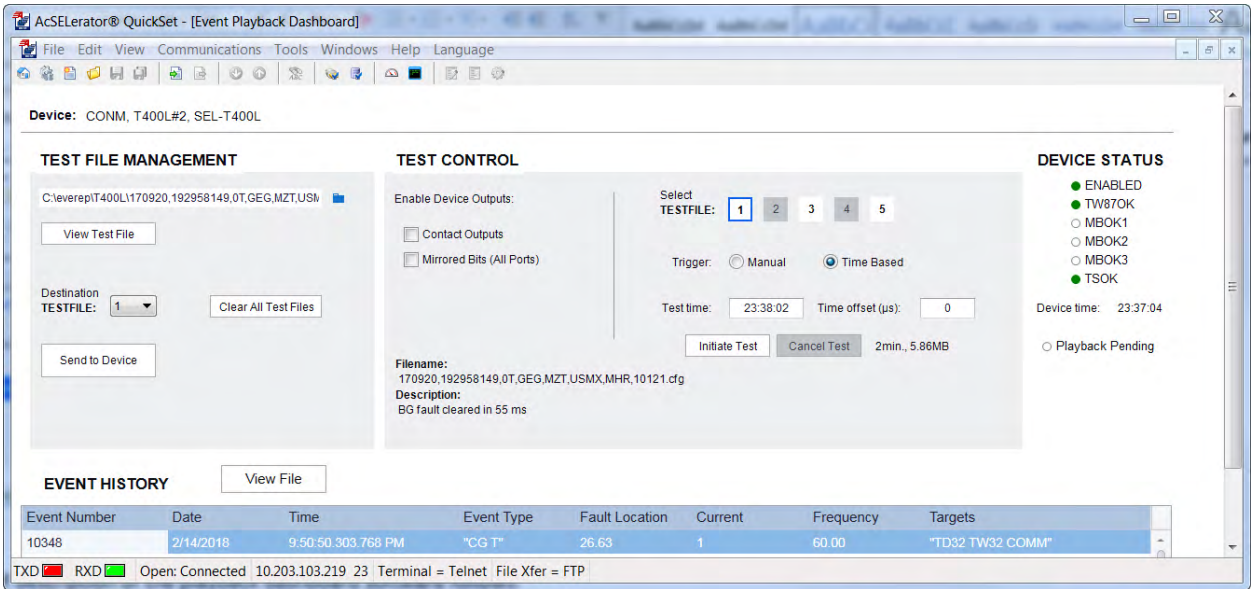

Figure 11.19 Event Playback Dashboard User Interface

A brief description of the playback dashboard software follows:

- The **Event Playback Dashboard** (accessible by clicking **Tools > Event Playback**) is available when your PC is connected to the SEL-T400L via Ethernet and the FTP file transfer option is enabled (see *Using QuickSet on page 8.49* for information on FTP and Ethernet connectivity). You can also use the dashboard to play back already uploaded test files when your PC is connected to the relay via the front-panel serial port. Verify the device identification data (at the top left of the dashboard) to ensure that you are initiating tests on the correct SEL-T400L.
- The **TEST FILE MANAGEMENT** area of the dashboard allows you to select, view, and upload the test file to the target SEL-T400L, and to initiate and clear test files in the target SEL-T400L.
  - You can upload as many as five test files by selecting the file location path and the destination for the file in the target device (**Destination TESTFILE**: 1, 2, …, 5). Click **View Test File** to plot the test signals to ensure that you are uploading the correct test file. Initiate the test file upload by clicking **Send to Device**. The dashboard provides an upload progress status during the file transfer. The **TEST CONTROL** area of the dashboard highlights test files that are present in the relay (already uploaded) with a white background. The dashboard provides the **Filename** and **Description** string of the selected test file for your convenience.
  - You do not need to clear a test file before uploading a new file. The upload procedure overwrites the old content. However, you may choose to **Clear All Test Files** after the test session.
- Use the **TEST CONTROL** area of the dashboard to execute a playback test.
  - Control the behavior of the relay contact outputs and MIRRORED BITS transmission with the corresponding check boxes. For security, these relay outputs are disabled by default. Leave them disabled unless you are testing a protection scheme (i.e., enable MIRRORED BITS transmission) or if you want to monitor contact outputs rather than Relay Word bits during the playback test.
  - Select the test trigger as either **Manual** or **Time Based**. A manual test is executed on the top of the second plus the specified **Time offset** value. A time-based test is initiated at the top of the second of the specified time plus the specified **Time offset**.
  - When using a **Time Based** trigger, specify the **Test time** in hh:mm:ss format. Use the device time displayed in the **DEVICE STATUS** area as a reference. Provide enough advance time for the remote crew(s) to enter the agreed trigger time. Note that the trigger time should be at least 3 minutes and at most 30 minutes after the present relay time. For events longer than 0.5 seconds, the trigger time should be at least 6 minutes in advance to allow the relay enough time to prepare the data for playback.
  - Enter a **Time offset** value to delay the test initiation up to 99 µs from the top of the second. Power system events occur at a random time with respect to the relay processing intervals. To simulate the random occurrence time of power system events, you may want to repeat a given test with several **Time offset** values (between 0 and 99 µs). When testing TW-based functions

with multiple relays, ensure that you use the same **Time offset** in all relays in the scheme. The **Time offset** test feature is for advanced investigations and troubleshooting. Typical testing does not require repeating the same test with multiple values of the **Time offset**.

- ➢ Click on the **Initiate Test** button to initiate the test in either of the triggering modes. For security, you must acknowledge the Initiate Test command on the relay front panel within 60 seconds of clicking the **Initiate Test** button. The acknowledgment is valid for one hour. This feature prevents an unintentional or malicious usage of the playback test capability of the relay.
- ➢ You can use the **Cancel Test** button to cancel a pending test.

➤ The **DEVICE STATUS** area of the dashboard shows the key HMI indicators of the relay under test for your convenience. This includes the ENABLED status of the relay, the status of the protection channels, the status of the time synchronization, the relay time, and the timer countdown of a scheduled test (the timer countdown is only available when there is a pending playback test). These indications are especially helpful when testing protection schemes with a time-based test trigger.

Event Upload and Playback Control Without Using QuickSet

You can control playback testing by uploading the test files directly via FTP over Port 5 and executing playback tests using the **PLAY** command. You must name the test files as TESTFILE*n*.ply (where *n* = 1, 2, …, 5) when using a generic FTP utility. See *Appendix C: SEL ASCII Commands* for a detailed description of the **PLAY** command.

Event Playback Test Annunciation and Security

The event playback substitutes actual voltages and currents at the relay terminals with the contents of the uploaded test file. The test files usually include fault conditions, and when played back, they may activate relay outputs including permissive trip communications signals, trip contact outputs, and breaker failure initiate signals. The SEL-T400L provides the following security features for the playback test:

➤ You can upload test files and execute playback tests only from Access Level 2.

➤ The playback test cannot be remotely initiated. The SEL-T400L requires front-panel acknowledgment of the playback **Initiate Test** command before starting the test session.

➤ By default, the relay disables its outputs during the playback test. You have an option to enable the relay outputs if your test requires it.

➤ The PLAY (event playback in progress), PLAYP (event playback pending), and PLAYR (event playback in progress at remote terminal) Relay Word bits provide annunciation of the event playback. Consider mapping these Relay Word bits into your SCADA system to monitor playback test activity for in-service relays.

➤ All relay functions continue to operate normally while the PLAYP bit is asserted.

NOTE: When using a communications port to send breaker failure initiation or autoreclose initiation, disable or disconnect the corresponding port to avoid relay misoperation during playback testing.

NOTE: Issue the **TAR R** command to reset latched targets and ensure that there are no standing trips before returning the relay under test to service.

- To prevent assertion of the relay logic when starting and ending the playback test, the relay invalidates the incremental quantities for 50 ms after the rising- and falling-edge transitions of the PLAY bit. The trip logic, event recorder, and fault locator are also inhibited during these periods.
- The ALARM contact output activates when the PLAY or PLAYP Relay Word bit is asserted. Consider mapping the ALARM Relay Word bit into your SCADA system to monitor the state of the relay including the playback test activity for in-service relays.

Basic Relay Inspection and Tests

Verifying Voltage and Current Inputs

Use the **MET** command to verify relay wiring; relay ac input circuitries; CT and PT ratio settings; and **LINEI**, **VNOM**, and **NFREQ** settings. This command can also be used for troubleshooting your test setup and for performing on-load testing after restoring ac voltage and current connections to the relay and before restoring the trip and other outputs.

The **MET** command (see *METER on page C.10*) displays relay metering values. *Figure 11.20* shows a sample MET report (see *Metering Quantities on page E.4* for more information). The phasor angles are referenced to the local positive-sequence voltage. The phasor magnitudes are scaled to rms.

```
=>MET <Enter>

SEL-T400L                                   Date: 2017/03/04  Time: 17:55:37.083
Station A                                   Time Source: HIRIG
                                            Serial Number: 1170231369


                    Phase Currents-W                  Phase Currents-X
                IAW        IBW        ICW          IAX        IBX        ICX
I MAG (A)     362.421    339.311    349.911        0.000      0.000      0.000
I ANG (DEG)   162.68      41.41     -73.45         0.00       0.00       0.00

                    Phase Currents
                IA         IB         IC
I MAG (A)     362.421    339.311    349.911
I ANG (DEG)   162.68      41.41     -73.45

                    Phase Voltages                  Phase-Phase Voltages
                VA         VB         VC           VAB        VBC        VCA
V MAG (kV)    300.116    300.540    298.451      521.291    516.900    519.097
V ANG (DEG)     0.05    -120.37     120.33        29.86     -90.14     150.28

                 Sequence Currents (A)             Sequence Voltages (kV)
               I1         3I2        3I0          V1         3V2        3V0
MAG           350.295     48.202      8.752      299.699      4.390      2.915
ANG (DEG)     163.56     142.50     -20.51        -0.00     30.04    -150.91
```

Figure 11.20 Metering Data (Response to the METER Command)

```
                    Phase Currents-REMOTE
                   IA         IB         IC
I MAG (A)      396.369    385.547    363.468
I ANG (DEG)     22.36    -101.36     144.72

                    Phase Voltages-REMOTE            Phase-Phase Voltages-REMOTE
                   VA         VB         VC           VAB        VBC        VCA
V MAG (kV)     312.145    310.398    311.651      539.519    537.089    541.455
V ANG (DEG)      3.39    -116.76     123.84       33.22     -86.39     153.64

                Sequence Currents (A)-REMOTE       Sequence Voltages (kV)-REMOTE
                   I1         3I2        3I0          V1         3V2        3V0
MAG            381.436     61.765     18.296      311.395      4.374      1.688
ANG (DEG)       21.86      44.94    -109.40        3.49     -22.83     175.77


FREQ (Hz)      60.002

=>
```

Figure 11.20 Metering Data (Response to the METER Command) (Continued)

Compare values the relay reports with values you inject.

Additionally, you can trigger an event record by issuing the **TRIGGER** command to capture high-resolution relay oscillography. Compare the reported voltage and current traces with the signals you inject. Contact SEL if you observe any signal features indicating possible issues with the voltage or current inputs of the relay.

Verifying Control Outputs

If you established communication with the relay via Port F or Port 5 (see *Communications Setup on page 8.42* for details on how to establish communication with the relay) you can use a terminal emulator or QuickSet to pulse the control outputs. Note that the BREAKER jumper enables and disables the **PULSE** command (see *Accessing and Configuring Relay Jumpers on page 10.18* for details). You cannot use the front-panel HMI to verify control outputs.

Verifying Control Inputs

If you established communication with the relay via Port F or Port 5 (see *Communications Setup on page 8.42* for details on how to establish communication with the relay) you can use a terminal emulator or QuickSet to view the status (asserted/deasserted) of the control inputs. You cannot use the front-panel HMI to verify control inputs.

Verifying Communications Ports and IRIG-B Input

Verify communications ports and the IRIG-B timing input by connecting a compliant device, configuring the ports accordingly, and exercising supported applications. Use communications statistics to inspect for any data loss or other problem.

Measuring Line Propagation Time During Line Energization Test

The TW87 scheme and the TW fault-locating method of the SEL-T400L use the TW line propagation time setting, TWLPT. The TW87 scheme uses this time when calculating the restraining quantity and can tolerate as much as ±10 μs of error in the TWLPT setting. Errors larger than this tolerance could compromise security of the TW87 scheme. The fault location estimate could be off by about 300 m or 1000 ft (single-ended method) or by about 150 m or 500 ft (double-ended method) for every 1 μs of error in the TWLPT setting. Therefore, it is critical to configure the relay with an accurate TWLPT value.

SEL recommends measuring the line propagation time by using the TW recordings captured while performing a line energization test. After you have authorization of the power system operator, follow these steps to measure the TW line propagation time:

Step 1. Verify that the PT secondary voltages and CT secondary currents are properly connected to the SEL-T400L.

Step 2. Verify that the SEL-T400L has proper settings. Particularly ensure accuracy of these settings:

- NFREQ (nominal system frequency)
- PHROT (system phase rotation)
- LINEI (line current source)
- Current transformer ratio:
  - CTRW if LINEI = IW
  - CTRX if LINEI = IX
  - CTRW and CTRX if LINEI = COMB
- PTR (potential transformer ratio)

Step 3. Program the TWDD Relay Word bit in the ER setting. (Remove it after testing to avoid extremely sensitive triggering of event records.)

Step 4. With the line energized, verify that the relay measures the expected voltages and currents.

Step 5. Request opening of the circuit breakers at the local and remote terminals to de-energize the power line.

Step 6. Request closing of the local line circuit breaker to energize the line.

Step 7. Verify that the relay captured the energization event either by refreshing the **Event History** in QuickSet or by issuing the **HIS** command from your computer.

Step 8. Retrieve the 1 MHz event report (MHR COMTRADE file) for the line energization through use of QuickSet or via FTP through use of Windows Explorer or a web browser.

Step 9. Launch SYNCHROWAVE Event and view the IA, IB, and IC currents.

NOTE: When measuring the TWLPT value, you must close the local circuit breaker while the remote circuit breaker is open.

Step 10. Following the pole closure, identify the pole that closed last and the corresponding phase current that has a visible change at approximately $\Delta t \cong (2 \bullet LL)/(0.98 \bullet c)$ after the pole closure (where c is the speed of light and LL is the line length). This change corresponds to the TW reflection from the remote end of the line. The 0.98 value is the typical TW propagation velocity for an overhead power line relative to the speed of light in free space, c. For underground cables, use half the speed of light in free space when approximating the time of the reflection from the remote end of the line.

NOTE: Use half of the TW round-trip time as the TWLPT setting.

Step 11. Plot the alpha-mode current component for the phase identified in *Step 10* together with the corresponding current TW and measure Δt; use half of this time in microseconds to set TWLPT.

Example

Figure 11.21 shows the phase currents captured with the SEL-T400L during energization of a 400 kV, 225 km (139.81 mi) overhead transmission line. As shown in the figure, Pole B is the last pole to close. Estimate the approximate round-trip travel time as follows:

$$\text{RoundTripTime}_{\text{APPROX}} = \frac{2 \bullet LL}{0.98 \bullet c} = \frac{2 \bullet 225\ \text{km}}{0.98 \bullet 0.3\ \text{km}/\mu\text{s}} = 1531\ \mu\text{s}$$

Observing the B-phase current, you can see that there is a visible change at approximately 1531 µs after Pole B closes (as shown in *Figure 11.21*). For overhead lines, the TW Mode setting, MODE, is set to CLARKE; therefore, use the Alpha-B current TW for measuring the TWLPT settings value.

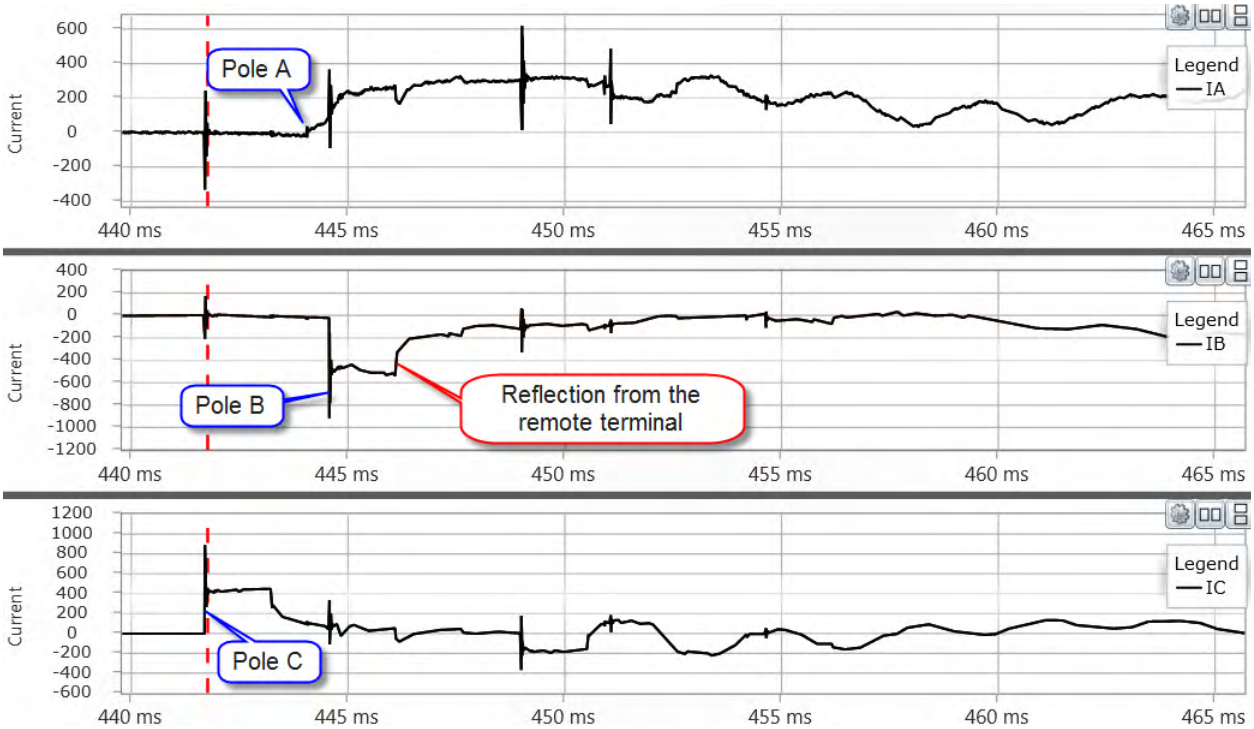

Figure 11.21 Identify the Last Pole to Close to Determine the TWLPT Value

Plot the Alpha-B current (IB) and the Alpha-B current TW (TWIB_ALPHA), as shown in *Figure 11.22*. Inspect the current TW trace and identify the peak that corresponds to the pole closing and the peak that corresponds to the reflection from the remote terminal.

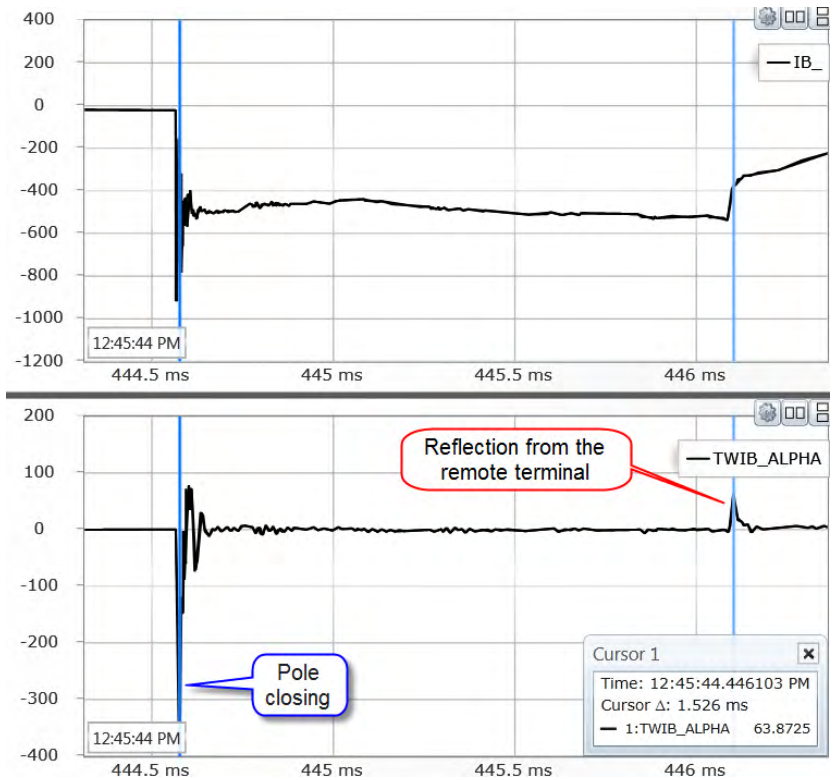

Figure 11.22 Alpha Current and Alpha Current TW in the Selected Phase

Zoom in around the TW launched when the last pole closes and around the reflected TW, and accurately place the cursors at the current TW peaks, as shown in *Figure 11.23*.

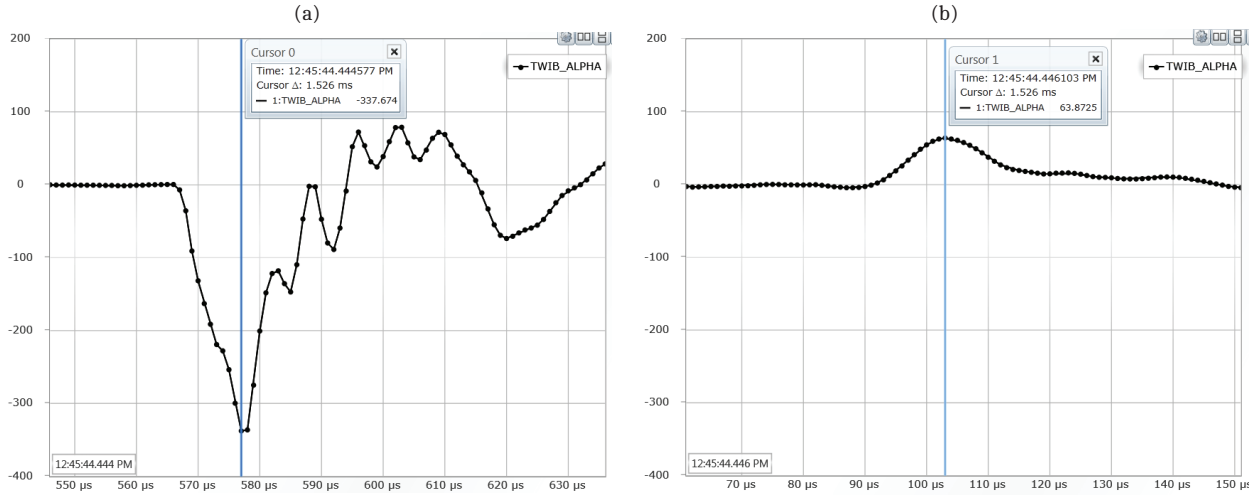

Figure 11.23 (a) Current Launched at Breaker Closing and (b) Current TW Reflected From the Remote Terminal

Measure the time difference between the two peaks by using the software time cursors. Use half of the measured round-trip time as the TWLPT settings value as follows:

$$\text{TWLPT} = \frac{1526\ \mu\text{s}}{2} = 763\ \mu\text{s}$$

APPENDIX A

Firmware and Manual Versions

Firmware

Determining the Firmware Version

To determine the firmware version, view the status report by using the **ID** command or the front-panel HMI (**Relay Status > FID**). The Firmware Identification (FID) number determines the firmware revision.

The firmware version will be either a standard release or a point release. A standard release (R-number) adds new functionality to the firmware beyond the specifications of the existing version. A point release (V-number) is reserved for modifying firmware functionality to conform to the specifications of the existing version. Additional details regarding standard and point releases are provided in *SEL-T400L Firmware Revision Convention on page B.1*. The release date is specified as the D-number. For example, the following is standard release revision R100, point release version V0, with a release date denoted by Dxxxxxxxx.

FID=SEL-T400L-R100-V0-Z001001-Dxxxxxxxx

Revision History

Table A.1 lists the firmware versions, revision descriptions, and corresponding instruction manual date codes. When using the SEL-T400L for TW87 applications, relays at both line terminals of a protected line must use firmware that is compatible with one another, as shown in the Compatible Firmware Versions for TW87 Applications column of *Table A.1*. The Compatible SELBOOT Versions column of *Table A.1* lists the versions of SELBOOT that are compatible with each version of the main firmware. It is recommended that the latest compatible SELBOOT release be used for each version of the main firmware.

Starting with revisions published after March 1, 2022, changes that address security vulnerabilities are marked with “[Cybersecurity]”. Improvements to cybersecurity functionality that should be evaluated for potential cybersecurity importance are marked with “[Cybersecurity Enhancement]”.

Table A.1 Firmware Revision History (Sheet 1 of 6)

Firmware Identification (FID) Number	Summary of Revisions	Compatible Firmware Versions for TW87 Applications	Compatible SELBOOT Versions	Manual Date Code
SEL-T400L-R104-V4-Z005004-D20230714	Includes all the functions of SEL-T400L-R104-V3-Z005004-D20230203 with the following additions: ➤ Improved security of the TW87 scheme by including a supervisory condition in the TW87 restraining logic. This condition determines if the aerial mode current TW magnitude exceeds the ground mode current TW magnitude. ➤ Improved the TW87 fault-type identification logic. In firmware version R104-V3 and earlier, the TW87 fault-type identification logic could incorrectly identify the fault type for phase-to-phase faults.	R100-V1 R101-V0 R102-V0 R103-V0 R104-V0 R104-V1 R104-V2 R104-V3 R104-V4	R100-V1 R100-V0	20230720
SEL-T400L-R104-V3-Z005004-D20230203	Includes all the functions of SEL-T400L-R104-V2-Z005004-D20210930 with the following additions: ➤ [Cybersecurity] Resolved a rare, low-risk issue where deliberately crafted Ethernet traffic could cause the SEL-T400L to perform a diagnostic restart. ➤ [Cybersecurity] Updated a third-party networking software component, which removes low-risk security vulnerabilities that could result in temporary loss of Ethernet communications.	R100-V1 R101-V0 R102-V0 R103-V0 R104-V0 R104-V1 R104-V2 R104-V3	R100-V1 R100-V0	20230203
SEL-T400L-R104-V2-Z005004-D20210930	Includes all the functions of SEL-T400L-R104-V1-Z005004-D20210421 with the following addition: ➤ Resolved an issue with the single event upset (SEU) detection and correction system. An SEU can cause a memory bit to change state from a logical 0 to a logical 1 or vice versa. If this change occurs in a critical memory region, it can produce a diagnostic self-check error or cause an undesired operation. Firmware version R104-V1 and earlier unintentionally disables this SEU detection and correction system following an SEU condition.	R100-V1 R101-V0 R102-V0 R103-V0 R104-V0 R104-V1 R104-V2	R100-V1 R100-V0	20211004

Table A.1 Firmware Revision History (Sheet 2 of 6)

Firmware Identification (FID) Number	Summary of Revisions	Compatible Firmware Versions for TW87 Applications	Compatible SELBOOT Versions	Manual Date Code
SEL-T400L-R104-V1-Z005004-D20210421	Includes all the functions of SEL-T400L-R104-V0-Z005004-D20210226 with the following addition: ➤ Resolved a security issue with the POTT scheme that may arise when the line is lightly loaded (prefault load current at about 5 percent of the CT nominal). The SEL-T400L uses current for open-pole detection and may inadvertently declare a single-pole open condition if the load current is very low and slightly unbalanced. Under these conditions, the POTT scheme may operate for an external ground fault if the fault involves the phase that has been inadvertently declared open and the fault is reverse respective to the relay with the inadvertently declared open-pole condition. The updated firmware avoids using the zero-sequence current in the healthy phases when making the directional decision during open-pole conditions based on incremental quantities. The issue is not present during a single-pole tripping and reclosing period under a legitimate single-pole open condition.	R100-V1 R101-V0 R102-V0 R103-V0 R104-V0 R104-V1	R100-V1 R100-V0	20210421
SEL-T400L-R104-V0-Z005004-D20210226	➤ [Cybersecurity] Resolved an issue where the relay may restart after receiving the **FILE READ** command thousands of times since startup. ➤ Added line monitoring functionality. ➤ Added IEEE C37.94 encoding for double-ended TW-based fault locating, adaptive autoreclose cancel logic, and line monitoring. ➤ Resolved an issue in the TW87 data collection process so that it triggers on the local or remote TW current disturbance detector only. Firmware version R103-V0 and earlier would allow triggering of the TW87 data collection process on the TW current or the TW voltage disturbance detector. ➤ Improved the arming logic for phase loops such that it checks individual phase voltages involved in the loop instead of the phase-to-phase voltage. ➤ Improved interaction between the SEZFL and SETWFL methods to ensure that the SETWFL method uses the proper SEZFL fault location information as a reference.	R100-V1 R101-V0 R102-V0 R103-V0 R104-V0	R100-V1 R100-V0	20210304

Table A.1 Firmware Revision History (Sheet 3 of 6)

Firmware Identification (FID) Number	Summary of Revisions	Compatible Firmware Versions for TW87 Applications	Compatible SELBOOT Versions	Manual Date Code
	➤ Modified the information provided in the IEEE COMTRADE header file: added a nominal current parameter and removed Port F and Port 5 settings. ➤ Added the fault-locating method associated with the best available fault location to the **SUM** command response and the front-panel HMI. ➤ Updated the **VER** command and **COM TW87** command responses when non-compliant SFP transceivers are installed. ➤ Added setting range and value checks for advanced settings LL*n* and TWLPT*n* (*n* = 1–5) when EADVS is configured to N. ➤ Resolved an issue when configuring non-homogeneous line settings via a command line in conjunction with using the **TERSE** command. In firmware version R103-V0 and earlier, the relay may not calculate LL5 and TWLPT5 correctly. ➤ Resolved an issue where ROKP*n* (*n* = 1–3) deasserts only in the receiving SEL-T400L when the following two conditions are true: 1) ENCODING is set to C37.94 and 2) RXID in the receiving SEL-T400L is not equal to the TXID in the transmitting SEL-T400L. ➤ To comply with IEEE C37.232-2011, updated the TDR and MHR records file names to include “t”, instead of “T”, as the character appended to the time code field. ➤ Fixed an error in the **HIS** command description provided in the **HELP** command response. ➤ Updated the access level requirement for the **SER C** and **HIS C** commands. These commands are now only available at Access Level 2 and above. ➤ Updated the access level requirement for the **PLAY** command. This command is now available at Access Level 1 and above. ➤ Resolved an issue with the response associated with the DNP Object 0, Variation 227. Firmware version R103-V0 and earlier incorrectly reported that the SEL-T400L supports counter objects.			

Table A.1 Firmware Revision History (Sheet 4 of 6)

Firmware Identification (FID) Number	Summary of Revisions	Compatible Firmware Versions for TW87 Applications	Compatible SELBOOT Versions	Manual Date Code
	➤ Resolved an issue with the response associated with the DNP Object 0, Variation 216. Firmware version R103-V0 and earlier incorrectly reported the maximum number of binary outputs per request as ten. ➤ Resolved an issue with the response associated with DNP Object 41 and 42 requests. Firmware version R103-V0 and earlier incorrectly accepted DNP requests to write analog outputs. ➤ Resolved an issue where the user could lose communication with the SEL-T400L via Ethernet Port 5 following a flood of network traffic while connected to a 1 Gbps network. To reestablish communication, the user would have needed to restart the SEL-T400L.			
SEL-T400L-R103-V0-Z004003-D20190430	➤ Added DNP3 over Ethernet LAN/WAN. ➤ Added IEEE C37.94 encoding for permissive and direct transfer tripping signals. ➤ Modified the TW32 directional element logic to enhance dependability, security, and accuracy of phase selection. ➤ Modified the POTT logic to allow the TW32 element to key permission using a dedicated bit, separate from the TD32-driven permissive bits, for the benefit of supervising the received bit with the TW32 element. This change addresses a security concern for rare system configurations where the TD32 element and the TW32 element may detect opposite fault directions for an external fault. ➤ Resolved an issue with an algorithm that is correcting the raw 1 MHz current and voltage signals for errors in the relay input circuits, including the dc offset in analog filters and the ADC. In previous firmware versions, the algorithm may unintentionally overcorrect, resulting in errors in the very low-frequency spectrum (below 5 Hz), without any impact on protection or fault locating. As a result of this change, the metering accuracy specification applies now to local currents only. ➤ Improved dependability of the single-ended TW fault-locating method by considering and processing fault location results regardless of the result from the double-ended TW fault-locating method.	R100-V1 R101-V0 R102-V0 R103-V0	R100-V1 R100-V0	20190430

Table A.1 Firmware Revision History (Sheet 5 of 6)

Firmware Identification (FID) Number	Summary of Revisions	Compatible Firmware Versions for TW87 Applications	Compatible SELBOOT Versions	Manual Date Code
	➤ Improved the security of permissive and direct transfer tripping signals with SEL MIRRORED BITS encoding by applying a security count of 2 at the receiving end. ➤ Resolved an issue where a defective SD card could result in disabling the relay. ➤ Resolved an issue where the time reported by the relay could be incorrect if you enter SELBOOT and subsequently exit without restarting the relay. ➤ Resolved an issue where certain Ethernet traffic could cause the relay to safely restart.			
SEL-T400L-R102-V0-Z003002-D20180221	➤ Added event playback functionality. ➤ Resolved an issue in the previous firmware where the POTT logic with ETW32 = Y in three-pole tripping applications operated based on local TW32F assertion instead of the intended TD32F assertion. ➤ Resolved an issue in the previous firmware where the local time zone offset with respect to UTC, embedded in the COMTRADE configuration file, was inadvertently stored at the file retrieval instead of at the record trigger. ➤ Resolved an issue with ARC logic in the previous firmware where the ARC output does not follow the autoreclose cancel default setting, ARCD, when a double-ended traveling wave fault location result is not available. ➤ Resolved an issue in the previous firmware related to storing event and trip counters in the nonvolatile memory. These counters are now stored everyday at 00:00:00 UTC. ➤ Changed the accuracy of frequency measurement to ±0.001 Hz across the full range of 40–70 Hz, (previous firmware stated accuracy across the range of 40.3–70 Hz). ➤ Changed the fast hybrid Form A contact output dropout time to ≤8 ms, (previous firmware version stated a dropout time of ≤8.25 ms). ➤ Added CONAM and SID to DEVID in the SEL ASCII ID command response (previous firmware version only included RID). ➤ Removed hidden Relay Word bits (tagged as UNUSED) from the TDR COMTRADE binary signal list.	R100-V1 R101-V0 R102-V0	R100-V1 R100-V0	20180221

Table A.1 Firmware Revision History (Sheet 6 of 6)

Firmware Identification (FID) Number	Summary of Revisions	Compatible Firmware Versions for TW87 Applications	Compatible SELBOOT Versions	Manual Date Code
	➤ Added a front-panel acknowledgment requirement for the **TWTEST** command. ➤ The ALARM contact now asserts when the SEL-T400L is in TWTEST mode.			
SEL-T400L-R101-V0-Z002001-D20170619	➤ Added support for the 1 A CT nominal input relay model. ➤ Added Fast Time-Domain Values streaming protocol over Ethernet Port 5.	R100-V1 R101-V0	R100-V1 R100-V0	20170619
SEL-T400L-R100-V1-Z001001-D20170602	Includes all the functions of SEL-T400L-R100-V0-Z001001-D20170321 with the following additions: ➤ Resolved an issue related to the time synchronization mechanism over direct fiber channel on Port 6. This issue may incorrectly lock the local times of the two relays 25 microseconds apart. The incorrect lock can happen when the link is established. This timing error degrades the accuracy of the double-ended traveling-wave fault locator, and results in loss of dependability of the traveling wave differential scheme without loss of security. ➤ Resolved an issue where the previous firmware did not map the Adaptive Autoreclose Cancel (ARC) Relay Word bit to the transmit MIRRORED BIT 7.	R100-V1	R100-V1 R100-V0	20170602
SEL-T400L-R100-V0-Z001001-D20170321	➤ Initial version.	R100-V0	R100-V1 R100-V0	20170321

SELBOOT

SELBOOT is a firmware package that handles hardware initialization and provides the functions needed to support firmware upgrades. The SELBOOT version is either a standard release or a point release, as described in *SEL-T400L Firmware Revision Convention on page B.1*. To determine the SELBOOT version, use the **ID** command. The device reports the SELBOOT firmware identification (BFID) label as:

BFID=SLBT-T400L-Rxxx-Vx-Zxxxxxx-Dxxxxxxxx

Table A.2 lists the SELBOOT releases used with the SEL-T400L and revision descriptions. The most recent SELBOOT revision is listed first.

Table A.2 SELBOOT Revision History

SELBOOT Firmware Identification (BFID)	Summary of Revisions
SLBT-T400L-R100-V1-Z001001-D20170508	➤ Enhanced SELBOOT to reduce the time of upgrading the main firmware. This release does not impact relay functionality.
SLBT-T400L-R100-V0-Z001001-D20170321	➤ Initial version.

Instruction Manual

The date code at the bottom of each page of this manual reflects the creation or revision date.

Table A.3 lists the instruction manual versions and revision descriptions. The most recent manual version is listed first.

Table A.3 Instruction Manual Revision History (Sheet 1 of 7)

Date Code	Summary of Revisions
20241220	Appendix A ➤ [Cybersecurity] Added "[Cybersecurity]" to the release note in *Table A.1: Firmware Revision History* that indicates firmware version R104-V0 resolved an issue where the relay may restart after receiving the **FILE READ** command thousands of times since startup. The release note was also relocated to be the first entry in the Summary of Revisions.
20240828	Appendix A ➤ Updated release notes in *Table A.1: Firmware Revision History* to indicate that firmware version R104-V0 resolved an issue where the relay may restart after receiving the **FILE READ** command thousands of times since startup.
20240213	Section 10 ➤ Updated image of the relay serial number label in *Figure 10.30*: *SEL-T400L Serial Number Label*.
20230720	Section 2 ➤ Updated *One-Time Calculations* to explain the supervisory condition that compares the aerial mode current TW with the ground mode current TW. This included updating *Figure 2.26: TW87 Restraining Logic*. ➤ Updated *Fault-Type Identification* to reflect the changes to the TW87 fault-type identification logic. Appendix A ➤ Updated for firmware version R104-V4.
20230203	Appendix A ➤ Updated for firmware version R104-V3.
20211004	Appendix A ➤ Updated for firmware version R104-V2.
20210707	Section 1 ➤ Updated *Type Tests* in *Specifications*: removed IEEE/ANSI C63.4-2014 and added 47 CFR Part 15B and Canada ICES-001 (A) / NMB-001 (A). Section 6 ➤ Modified *Equation 6.11* to account for applications where the system Z0/Z1 ratio is substantially different than the line Z0/Z1 ratio. The change in *Equation 6.11* also accounts for the subsynchronous component in the incremental current when inserting the series capacitors. The previous version of the equation yielded setting values for TD67G and TD67P that can be too small in some applications. *Equation 6.11* is for the user to calculate the relay setting. The relay functionality has not been changed.
20210421	Appendix A ➤ Updated for firmware version R104-V1.

Table A.3 Instruction Manual Revision History (Sheet 2 of 7)

Date Code	Summary of Revisions
20210304	**This release adds the following features:** ➤ Line monitoring. ➤ Double-ended TW-based fault locating, adaptive autoreclose cancel logic, and line monitoring over an IEEE C37.94 channel. **Section 1** ➤ Updated the functional overview drawing, *Figure 1.1*: *SEL-T400L Functional Overview*, to show new features. ➤ Added information about using an IEEE C37.94 channel for double-ended TW-based fault locating, adaptive autoreclose cancel logic, and line monitoring. ➤ Updated applications for Ports 1, 2, 3, and 6, and the IRIG-B input in *Specifications*. ➤ Updated *Fault Locator* in *Specifications*. ➤ Added *Line Monitor* in *Specifications*. ➤ Added maximum channel latency for the Ports 1, 2, and 3 POTT and double-ended TW-based fault-locating applications in *Specifications*. ➤ Corrected the wavelength for 0.5 km multimode SFP transceiver in *Specifications*. **Section 2** ➤ Corrected the TW32 observation window in *Figure 2.18*: *TW32 Operating Principle: (a) Forward Fault, and (b) Reverse Fault*. **Section 3** ➤ Added information about using an IEEE C37.94 channel for double-ended TW-based fault locating, adaptive autoreclose cancel logic, and line monitoring, including updates to the following: ➢ *Figure 3.1*: *Input and Output Capabilities of the SEL-T400L.* ➢ *Figure 3.2*: *MB Port 2 Configured to Interface With an IEEE C37.94-Compliant Multiplexer for Digital Teleprotection*. **Section 4** ➤ Added information about using an IEEE C37.94 channel for double-ended TW-based fault locating, adaptive autoreclose cancel logic, and line monitoring. ➤ Updated *Figure 4.1*: *Fault Locator Overview*. ➤ Updated *Table 4.1*: *Fault Locator Settings* to include the new FLPORT setting and description. ➤ Corrected the APO and 3PO inputs in *Figure 4.3*: *Fault Locator Triggering Logic*. ➤ Added the *Line Monitoring Logic* section. **Section 5** ➤ Corrected the number of digital channels in *Figure 5.2*: *TDR COMTRADE .CFG File Data*. ➤ Updated *Figure 5.3*: *MHR COMTRADE .HDR File Data* to add the relay nominal current parameter and the fault-locating method associated with the best available fault location. ➤ Updated *Figure 5.6*: *Sample SUMMARY Report* to add the fault-locating method associated with the best available fault location. ➤ Updated *Table 5.2*: *Information Included in the HDR File* to add the relay nominal current parameter and remove Port F and Port 5 settings. ➤ Updated *Table 5.4*: *Information Included in the SUMMARY Report* to add the fault-locating method associated with the best available fault location. ➤ Updated *Table 5.11*: *SER Points and Chatter Criteria Settings* to include the line monitoring Relay Word bits. **Section 6** ➤ Added information about using an IEEE C37.94 channel for double-ended TW-based fault locating using Ports 1, 2, and 3. ➤ Expanded *STEP 18. Fault Locator Trigger and Port* to include recommendations for the FLPORT setting. ➤ Updated *Figure 6.13*: *Configuring the Fault Locator and Autoreclose Cancel Logic* to add information about using an IEEE C37.94 channel for the fault locator, and corrected the path when a communications channel is not available for hybrid line applications. ➤ Updated *Table 6.5*: *SER4 Default Settings With Comments* and *Table 6.6*: *ER Default Settings With Comments* to include the line monitoring Relay Word bits.

Table A.3 Instruction Manual Revision History (Sheet 3 of 7)

Date Code	Summary of Revisions
	Section 8 ➤ Updated *Communications Setup* section. ➤ Updated *Figure 8.4*: *Fault Location Message* to add the fault-locating method associated with the best available fault location. ➤ Updated *Table 8.1*: *Typical Engineering and Operator Tasks and How to Accomplish Them With the SEL-T400L* to include the **LIMO** command and LINEMON.TXT file retrieval. ➤ Updated *Figure 8.37*: *SEL-T400L Response to the SHO Command (Device/Protection Settings Class)* to include FLPORT and line monitoring settings. **Section 9** ➤ Added LINEMON.TXT file to *Figure 9.13*: *REPORTS Directory Files*. **Section 10** ➤ Updated *Figure 10.9*: *Alarm Contact Output and Terminal Assignments*. **Section 11** ➤ Listed all relay functions you can test with the SEL-T4287 Traveling-Wave Test System. ➤ Corrected the following tables for testing Double-Ended Impedance-Based Fault Locating (TEST 11): ➢ *Table 11.15*: *Prefault, Incremental, and Fault Signals for Testing Double-Ended Impedance-Based Fault Locating in Relay 1 (Fault at 75 Percent of Line Length From Relay 1).* ➢ *Table 11.17*: *Prefault, Incremental, and Fault Signals for Testing Double-Ended Impedance-Based Fault Locating in Relay 2 (Fault at 25 Percent of Line Length From Relay 2).* **Appendix A** ➤ Updated for firmware version R104-V0. **Appendix C** ➤ Updated various command descriptions and Access Level requirements in *Table C.1*: *SEL ASCII Command Reference*. ➤ Added the **LIMO** command and updated the Access Level requirements for the following commands: **HIS**, **SER**, and **PLAY**. **Appendix D** ➤ Added the line monitoring Relay Word bits and corrected the description of the ALARM Relay Word bit. **Appendix E** ➤ Added the line monitoring analog quantities. **Appendix F** ➤ Updated *Figure F.1*: *Alarm Contact Output and Terminal Assignments*. ➤ Corrected the description of the ALARM Relay Word bit in *Table F.1*: *Alarm Relay Word Bits*. **Appendix G** ➤ Added *Line Monitoring* section. **Appendix I** ➤ Added *Table I.3*: *DNP Map Settings*. ➤ Added line monitoring analog inputs in *Table I.5*: *DNP3 Reference Data Map*. **SEL-T400L Relay Command Summary** ➤ Updated various command descriptions and added the **LIMO** command.
20190430	**This release adds the following two features:** ➤ DNP3 LAN/WAN protocol. ➤ User-selectable SEL MB8 or IEEE C37.94 encoding for MIRRORED BITS ports.

Table A.3 Instruction Manual Revision History (Sheet 4 of 7)

Date Code	Summary of Revisions
	Section 1 ➤ Updated the functional overview drawing, *Figure 1.1: SEL-T400L Functional Overview*, to show new features. ➤ Added introduction and specifications for SEL MB8 and IEEE C37.94 encoding methods. ➤ Updated POTT scheme operating times in *Figure 1.3: POTT Operating Time as a Function of Fault Location for Different Line Lengths Assuming TW32 Keying and a 115,200 bps MIRRORED BITS Channel With SEL MB8 Encoding Over Fiber-Based SONET/SDH* to reflect the increased security counts when using the SEL MB8 encoding method. ➤ Updated the current metering accuracy specification. **Section 2** ➤ Modified *Traveling-Wave Directional Element* description according to the changes in the TW32 directional element logic. ➤ Modified *Trip Logic* description according to the changes in the POTT logic associated with the use of the TW32 element. ➤ Updated descriptions of the SPT, 3PT, and E3PT Relay Word bits in *Table 2.19: Relay Word Bits Related to Trip Logic*. ➤ Updated the description of the E3PT setting in *Table 2.20: Settings Related to POTT, DTT, and Trip Logic*. ➤ Corrected the *ARMED LED Target Logic* description for the case when no prefault voltage and current are applied. **Section 3** ➤ Added information associated with selecting SEL MB8 and IEEE C37.94 encoding methods for the MIRRORED BITS ports. ➤ Modified *Table 3.1: MIRRORED BITS Assignments*, *Table 3.2: MIRRORED BITS Assignments for POTT and DTT Applications With an SEL-T400L*, and *Table 3.3: MIRRORED BITS Assignments for Breaker Failure and Autoreclose Applications With an SEL-T400L as the Line Relay* to show the usage of Bit 8 in the POTT scheme. ➤ Modified *Assignments of MIRRORED BITS I/O* to show the usage of Bit 8 in the POTT scheme. ➤ Added error types in *Table 3.6: Error Conditions Monitored in MIRRORED BITS Communications* and troubleshooting guidelines in *Table 3.7: Information Included in the COM Report* associated with the IEEE C37.94 encoding method. ➤ Updated *MIRRORED BITS COM Report* and *Loopback Testing* to reflect changes associated with the IEEE C37.94 encoding method. ➤ Expanded *Typical Protection Signaling Applications* to show applications that use an IEEE C37.94-compatible multiplexer. **Section 4** ➤ Updated *Fault Locating on Multiterminal Lines* to provide examples of computing fault location with TW arrival times retrieved through DNP3. ➤ Corrected the statement on the latency of the double-ended TW fault location result with respect to the fault locator trigger. ➤ Added information in *Selecting and Reporting Best Fault Location Results* regarding retrieving fault location via DNP3. ➤ Added information in *Fault Locating on Multiterminal Lines* regarding retrieving TW arrival times via DNP3 for calculating fault location. ➤ Corrected *Equation 4.2* for the swapped indices in the CT cable correction times. **Section 6** ➤ Added guidelines in *Communications Ports* for configuring MIRRORED BITS ports to use either the SEL MB8 or IEEE C37.94 encoding method. ➤ Corrected the TWLPT value for the 300 km and 100 km overhead line examples in *STEP 4. Traveling-Wave Line Propagation Time*. ➤ Clarified the cable section length for the TW87 scheme in *STEP 7. Assessing SEL-T400L Applicability to Hybrid Lines*. ➤ Added a note in *STEP 10. POTT Communications* about SEL MB8 and IEEE C37.94 encoding methods available for MIRRORED BITS ports. ➤ Updated ETW32 setting guidelines in *STEP 11. Permissive Trip Keying*. ➤ Added a recommendation in *Configuring the Event Report* for saving event and trip counters prior to a relay firmware upgrade.

Table A.3 Instruction Manual Revision History (Sheet 5 of 7)

Date Code	Summary of Revisions
	Section 7 ➤ Updated Port 1 settings in *Example 1. Two-Terminal Overhead Transmission Line*, and updated the example to use an IEEE C37.94-compliant multiplexer for protection signaling. ➤ Updated Port 1 settings in *Example 2. Two-Terminal Series-Compensated Overhead Transmission Line*. **Section 8** ➤ Updated *Table 8.10: SEL-T400L Settings Structure in QuickSet* and *Table 8.11: View and Set SEL-T400L Settings Classes and Instances* to include the DNP3 settings and related changes in the QuickSet tree structure. ➤ Updated *Figure 8.39: Configuring the MIRRORED BITS Port 1 Through Use of the SET Command* and *Figure 8.40: Example of Using the TE Parameter in the SET Command (Compare With Figure 8.39)* to include the ENCODING setting for selecting either the SEL MB8 or IEEE C37.94 encoding method. **Section 9** ➤ Added an introduction to DNP3 LAN/WAN and provided details on DNP communications settings. ➤ Updated the CFG.TXT file in *Figure 9.5: Sample CFG.TXT File* and the SETTINGS directory files in *Table 9.12: SETTINGS Directory Files* to show DNP3 settings files. **Section 10** ➤ Modified *Figure 10.11: SEL-T400L MIRRORED BITS Assignment and Usage Philosophy (SEL-T400L as a Sending and Receiving Relay)*, *Figure 10.12: SEL-T400L MIRRORED BITS Assignment and Usage Philosophy (SEL-T400L Receiving MIRRORED BITS From an SEL Relay With Programmable MIRRORED BITS)*, and *Figure 10.16: POTT and DTT Application Using Power Line Carrier* to show the usage of Bit 8 in the POTT scheme. ➤ Added *Figure 10.14: POTT and DTT Application Using IEEE C37.94-Compliant Multiplexers* showing an application example that uses IEEE C37.94-compliant multiplexers. ➤ Corrected *Figure 10.26: Typical AC/DC Connections—Single Circuit Breaker Line Termination* and *Figure 10.27: Typical AC/DC Connections—Double Circuit Breaker Line Termination* for polarity of the control power connection. ➤ Updated *Accessing and Configuring Relay Jumpers* for clarity. ➤ Added instructions on how to replace the SD card. **Section 11** ➤ Expanded statements on expected results when testing the TD32 element in *TEST 5. TD32ZF Threshold and TD32 Forward Operation* and *TEST 6. TD32ZR Threshold and TD32 Reverse Operation*. ➤ Updated *TEST 13. Testing the TW32 Element* to show the SEL-T4287 Traveling-Wave Test System voltage module, which is now available. **Appendix A** ➤ Updated for firmware version R103-V0. **Appendix C** ➤ Added the **TEST DB2** command. **Appendix D** ➤ Added the TESTDB2 Relay Word bit. ➤ Added two new Relay Word bits (KEYTW and PT87LTW), introduced when changing how the POTT logic uses the TW32 element for permissive keying. **Appendix E** ➤ Updated *Table E.3: Metering Values Available on Front-Panel HMI, QuickSet HMI, and Via SEL ASCII MET Command* and *Table E.5: Event-Related Analog Quantities Available on Front-Panel HMI, Via SEL ASCII HIS and SUM Commands, in the COMTRADE .HDR Files and Via the DNP3 LAN/WAN Protocol* to include quantities available via DNP3. **Appendix G** ➤ Added description on the length of the differentiator-smoother window that the TW32 element uses. **Appendix H** ➤ Added DNP as a source of date and time. ➤ Updated *Table H.1: SEL-T400L Timekeeping Modes and Sources*, *Table H.4: Information Included in the TIME Q Report*, and *Table H.5: Last Updated Sources* to include DNP as a source of time. **Appendix I** ➤ Added appendix with DNP3 LAN/WAN implementation information.

Table A.3 Instruction Manual Revision History (Sheet 6 of 7)

Date Code	Summary of Revisions
	Command Summary ➤ Added the **TEST DB2** command.
20180221	Section 1 ➤ Added introduction and specifications for the built-in event playback test functionality. ➤ Updated *Table 1.2: Additional Functions* to include the traveling-wave test mode and event playback functions. ➤ Updated *Specifications* for frequency measurement and fast hybrid contact output dropout time. Section 6 ➤ Updated description of the SALARM Relay Word bit in *Table 6.5*. Section 8 ➤ Added information associated with TW test mode and event playback functionality as pertaining to the front-panel HMI and QuickSet. ➤ Updated *Table 8.1: Typical Engineering and Operator Tasks and How to Accomplish Them With the SEL-T400L* to include TW test mode initiation and event playback testing. ➤ Updated *Figure 8.34(a): (a) Custom File Names; (b) Default File Names* to reflect the change in the DEVID field. ➤ Added *Tools > Event Playback* to show event playback options in QuickSet. Section 9 ➤ Updated *Events Directory* to reflect the addition of playback test files. ➤ Updated compressed ID message description to reflect the change in DEVID. ➤ Updated *Electronic Access Control* for front-panel acknowledgment of the TWTEST mode and event playback test initiation commands. Section 11 ➤ Updated *Testing With Traveling Waves* to reflect changes to TW test mode. ➤ Added *Event Playback Testing* to provide details on software tools associated with playback testing and instructions on how to use the built-in event playback functionality for testing the SEL-T400L. Appendix A ➤ Updated for firmware version R102-V0. Appendix C ➤ Added description of the **PLAY** command. Appendix D ➤ Added PLAY, PLAYP, and PLAYR Relay Word bits. ➤ Updated description for the SALARM Relay Word bit in *Table D.1: Relay Word Bits*. SEL-T400L Relay Command Summary ➤ Added the **PLAY** command.
20170925	Section 11 ➤ Corrected *Equation 11.11*, *Equation 11.12*, and associated incremental and fault signals for testing ground TD21 element (*TEST 7*) and phase TD21 element (*TEST 8*).
20170828	Section 1 ➤ Updated *Specifications* (added UL Listing).
20170619	Section 1 ➤ Added information and specifications for the 1 A relay model and the FTDV streaming protocol. Section 2 ➤ Added settings ranges and default values for the 1 A relay model (multiple tables). ➤ Corrected *Figure 2.31: Open-Pole Logic* (comparator signs). Section 4 ➤ Corrected *Figure 4.3: Fault Locator Triggering Logic* (replaced OR gate with AND gate). Section 9 ➤ Added FTDV streaming protocol feature description and settings.

Table A.3 Instruction Manual Revision History (Sheet 7 of 7)

Date Code	Summary of Revisions
	Section 11 ➤ Updated *Test 7. TD21G Reach and Operating Time* and *Test 8. TD21P Reach and Operating Time* examples to ensure pickup of the overcurrent supervision of the tested TD21 element for faults close to and beyond the TD21 reach point. **Appendix A** ➤ Updated for firmware version R101-V0. **Appendix G** ➤ Updated *Figure G.10: Mimic Circuit for Deriving AG-Loop Current* (corrected the sign of the $3i_0$ current).
20170602	**Appendix A** ➤ Updated for firmware version R100-V1 and SELBOOT version R100-V1. **Appendix B** ➤ Updated *Preparing for Firmware Upgrade Prior to Work on Site*. ➤ Updated *Upgrading Firmware Through Use of a Terminal Emulator*.
20170407	**Section 11** ➤ Corrected equation in Step 10 of *Measuring Line Propagation Time During Line Energization Test*.
20170321	➤ Initial version.

APPENDIX B

Firmware Upgrade Instructions

This appendix provides guidelines and step-by-step instructions for upgrading the SEL-T400L firmware. Before deciding to perform the upgrade, carefully read firmware release notes (*Table A.1*) and any SEL service bulletin prompting consideration of a firmware upgrade. Also consider the scope of the settings review and the extent of relay recommissioning. When using the SEL-T400L POTT or TW87 protection schemes or relying on double-ended fault-locating methods, upgrade all relays in your line protection scheme to the same firmware revision. This is important because the SEL-T400L high-performance line protection schemes may not tolerate even subtle differences in logic and processing among the individual relays in the scheme.

These instructions are only intended for upgrading firmware from an older revision to a newer revision. Attempting to downgrade firmware (i.e., reverting back to an older firmware revision) may result in loss of relay calibration and other critical information in the relay, and may render the relay nonoperational. Contact SEL if you need to downgrade the firmware in a relay.

SEL allows SEL-T400L firmware upgrade only over the front-panel USB Port F from a locally connected computer and not over Ethernet Port 5 on a LAN.

This appendix does not describe procedures for removing an operational relay from service for firmware upgrade, restoring the relay back to service, and recommissioning or otherwise checking the relay after an upgrade. Follow your company policies and procedures, and industry best practices, when planning for and executing these important steps.

This appendix contains the following information:

- *SEL-T400L Firmware Revision Convention on page B.1*
- *Preparing for Firmware Upgrade Prior to Work on Site on page B.2*
- *Preparing for Firmware Upgrade on Site on page B.5*
- *Upgrading Firmware Through Use of ACSELERATOR QuickSet Firmware Loader on page B.7*
- *Upgrading Firmware Through Use of a Terminal Emulator on page B.15*

SEL-T400L Firmware Revision Convention

The SEL-T400L firmware is either a standard release or a point release. A standard release adds new functionality to a prior firmware revision beyond specifications of that prior revision. A point release modifies functionality of the prior firmware revision to conform to the original specifications of that firmware revision or for internal optimization without any other changes. Use the distinction between a standard release and a point release to decide how closely you want to evaluate the new firmware, if you want to review your application, if you need to review and modify your settings, and how much recommissioning you want to perform following the firmware upgrade.

A standard release is identified by the R-number of the firmware identification (FID) string. For example:

Present firmware:

FID=SEL-T400L-R100-V0-Zxxxxxx-Dxxxxxxxx

New standard release firmware:

FID=SEL-T400L-R101-V0-Zxxxxxx-Dxxxxxxxx

A point release is identified by the V-number of the FID string. For example:

Present firmware:

FID=SEL-T400L-R100-V0-Zxxxxxx-Dxxxxxxxx

New point release firmware:

FID=SEL-T400L-R100-V1-Zxxxxxx-Dxxxxxxxx

Assume you originally installed an R100-V0 firmware revision. If SEL discovers a deficiency in this firmware, SEL may issue R100-V1 firmware to address the deficiency. Because the R-number is unchanged in the new firmware, you can be certain that only deficiencies are addressed and the relay functionality has not been altered beyond that originally intended for the R100 revision. In this scenario, you should not expect any settings changes or need for re-engineering the application, documentation changes, or extensive recommissioning after the firmware upgrade.

Subsequently, SEL may issue R101-V0 firmware to bring new functionality or better performance to the SEL-T400L. Because the R-number changed, you may expect added functionality, added settings, new settings ranges, and so on. You should review your application and settings, and you may expect a larger recommissioning effort when upgrading from R100 to R101 as compared with upgrading from R100-V0 to R100-V1.

Note that SEL-T400L firmware files are intended for specific relays (for a range of relay serial numbers). Do not attempt to upgrade relays with serial numbers not listed in the firmware upgrade kit you received from SEL.

Preparing for Firmware Upgrade Prior to Work on Site

NOTE: Upgrade your QuickSet SEL-T400L driver, if necessary, before traveling to the work site.

You will need the following items to perform the firmware upgrade:

- Personal computer (PC) with a CDC USB Device driver installed (see *Preparing a PC for Communicating With an SEL-T400L Over Front-Panel USB Port F on page 8.43* for information on how to install the driver) and ACSELERATOR QuickSet SEL-5030 Software installed (see *Obtaining and Installing QuickSet on page 8.15* for information on how to install QuickSet)
- Access Level 1, 2, and C passwords for the relay(s) you will work on
- A terminal emulator that supports Xmodem/CRC protocol (QuickSet includes this terminal emulator software)
- USB A-to-B cable (such as an SEL-C664 USB cable)
- New firmware file. This file contains the main program to be loaded onto the relay

- SELBOOT firmware file. This file contains code that enables the main program to load and execute on the SEL-T400L hardware. (New SELBOOT firmware is released rarely, and you will only occasionally need to upgrade the SELBOOT firmware.)
- New settings files, if issued by your protection department as a part of the firmware upgrade process

Table B.1 identifies which firmware files you received in the upgrade kit.

Table B.1 Firmware Upgrade Files

File Name	File Type
SLBT-T400L-R*nnn*-V*x*.zds[a]	SEL-T400L SELBOOT firmware
SEL-T400L-R*nnn*-V*x*.zds[a, b]	SEL-T400L relay firmware

[a] *nnn* in the file name represents the firmware revision number.
[b] *x* represents the point release version number.

You should decide at the planning stage which of the following two firmware upgrade methods you want to use.

- *Upgrading Firmware Through Use of ACSELERATOR QuickSet Firmware Loader*. The Firmware Loader feature of QuickSet automates the firmware upgrade process and is the preferred method. You can use the Firmware Loader to upgrade only relay firmware (SEL-T400L-R*nnn*-V*x*.zds file). If you must upgrade SELBOOT firmware (SLBT-T400L-R*nnn*-V*x*.zds file), use the second method.
- *Upgrading Firmware Through Use of a Terminal Emulator*. Connect to the relay in a terminal emulator session and perform a sequence of manual steps to upgrade the firmware.

Saving and Verifying Firmware Files

NOTE: Firmware is designed to be used with specific relays. A list of relay serial numbers is provided as part of the firmware upgrade package. The firmware provided is for use with the listed relays only. Attempts to upgrade unlisted relays might not be successful and can result in relay failure.

The firmware files are provided either on a Firmware Upgrade CD included in the firmware upgrade kit, or in an email you receive from SEL. Copy the firmware files to an easily accessible location on your PC.

SEL provides firmware hashes as an additional tool to verify the integrity of SEL firmware upgrade files. This helps ensure that the firmware received from the factory is complete and unaltered prior to sending the firmware to the SEL device. Verify that the firmware file in your possession is a known good SEL firmware release by comparing the calculated hash value of the firmware in your possession with the hash value provided at selinc.com/products/firmware/.

To obtain the hash value for the firmware file you intend to use, obtain a file integrity checker tool (FSUM by SlavaSoft, Inc., for example) and use it to analyze the firmware through use of the MD5 and SHA-1 checksum algorithms. For example, if using FSUM, open the Microsoft Windows command line interface by clicking the **Start** button, selecting **Run**, and typing **cmd <Enter>**. Enter the following at the command prompt:

fsum –jnc –md5 –sha1 *firmware file name*

where *firmware file name* is the full path and file name of your SEL firmware file.

The FSUM tool lists the MD5 hash value first, followed by the SHA-1 hash value.

Go to selinc.com/products/firmware/ to obtain the MD5 and SHA-1 hash values for the firmware revision (R-number) and version (V-number) you plan to upgrade. The hash values from the output of FSUM should match the MD5 and SHA-1 hash values from the selinc.com hash verification tool. If the values do not match, either you are comparing different firmware files or the firmware file you planned to upload has been altered and should not be used. Contact SEL immediately if you suspect your firmware file has been altered.

Evaluating Settings Changes and Preparing Settings Files for the New Firmware

Depending on whether you upgrade firmware to a new standard release or a new point release, and on the extent and nature of the changes, you may be able to continue using the present settings files. Otherwise, you may need to prepare new settings files and have them ready when you upgrade firmware.

You may also combine a firmware upgrade with non-critical settings changes. In such a case, issue new settings files and have them ready before you start working on site.

It is a good practice to store in-service settings files in a central depository. Obtain the present in-service settings files from your central depository and convert them to a new revision before starting work on site. SEL recommends using the QuickSet settings convert feature (shown in *Figure B.1*) to automatically convert the in-service settings files to the settings file for the new firmware revision and to flag differences.

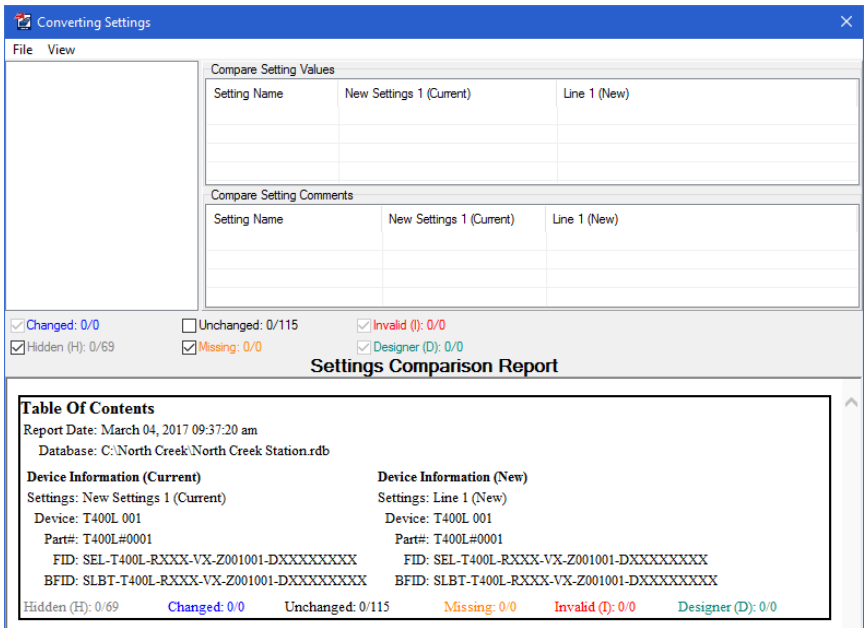

Figure B.1 Converting Settings

To evaluate new settings and the need for settings changes, carefully read the SEL service bulletin that prompted you to upgrade the firmware. In general, if the new firmware is a point release (see *SEL-T400L Firmware Revision Convention on page B.1*), there will be no new settings added to the relay, and a settings comparison can be performed after the upgrade process to confirm that settings properly transferred across the upgrade. If the new firmware is a standard release, compare the settings version number (SVN; see *Figure 8.17 on page 8.21*) of the new firmware with the SVN of the previous firmware. If these numbers match,

no new settings have been introduced, and as before, a settings comparison can be performed after the upgrade process to confirm that settings properly transferred across the upgrade. If the new firmware has a new SVN, then the settings changed in some manner between the firmware versions. In this case, SEL recommends that you convert the previous settings to a new settings file that contains the latest settings changes before working on site, and load a new settings file (if needed) after upgrading the firmware. The following text describes the QuickSet settings conversion feature, which should be used prior to the onsite work.

To compare and convert settings differences between previous and new firmware, use the settings conversion utility (see *Tools > Settings > Convert on page 8.27*). After the utility runs, it displays a comparison report (shown in *Figure B.1*) that indicates new settings as Missing (i.e., not in the previous firmware version). These settings now exist in the relay, but because they are new, their values are defaults and may be incorrect for your application. Be certain to update the new settings to suit your application.

If the report indicates different (Changed) settings, compare the settings you saved previously with the new settings in the relay. A changed settings value may result from a setting in the new firmware version providing greater precision than the setting in the previous firmware. For example, the previous firmware version setting may only allow two decimal points (ABC = 0.01), but the new firmware version allows three decimal points (ABC = 0.010). Verify that the settings value in the relay matches the saved settings value.

The comparison report can be printed or saved per your archival and documentation standards. If there are changes between the previous file and the converted file, there will be an **Accept Changes** button to the right of the **Settings Comparison Report** heading shown in *Figure B.1*. Accepting the changes causes the newly converted settings to appear, and they can be saved as necessary. Follow your company's procedures to issue a pending settings file to be loaded on the relay after the firmware upgrade. Refer to the *QuickSet Instruction Manual* available at selinc.com for more information on the settings conversion utility.

Testing Firmware Upgrade Procedure Prior to Working on Site

It is a good practice to perform the firmware upgrade on a test relay in the lab before working on site. This extra step ensures accuracy and security of the process, especially when you need to upgrade many relays at multiple locations with multiple personnel. You may consider skipping this step if your field personnel are familiar with SEL relays and perform firmware upgrades on a regular basis.

Preparing for Firmware Upgrade on Site

When on site, carefully identify relays you want to upgrade by checking serial numbers, faceplate labels, relay identification information, and station name and relay name settings.

Before starting the firmware upgrade, take steps to prevent accidental loss of power to the relay or to your PC. If you lose power during the firmware upgrade, you will need to start over. Such recovery from an aborted firmware upgrade attempt may require additional steps. Some steps may require you to restart the relay by removing and reapplying power to the relay. Identify the correct breaker or switch that powers the relay on which you intend to work.

Taking a Relay Out of Service

Before starting the firmware upgrade for an in-service relay, ensure the relay is removed from service according to your company's procedures and best practices. Specifically, ensure the relay outputs (both contact outputs and communications-based outputs) are isolated to prevent unintended tripping, breaker failure initiation, or autoreclose initiation.

Your monitoring system may alarm when the relay disables itself during the firmware upgrade process. Make sure you notify your system operators about your onsite work.

Connecting to the Relay

Connect an SEL-C664 communications cable (or equivalent USB A-to-B cable) to your PC and the front-panel USB Port F of the relay. Set the communications parameters in your terminal emulator software in QuickSet as follows:

- RTS/CTS = Off
- XON/XOFF = Off
- Data bits = 8
- Parity = None
- Stop Bits = 1

There is no need to set the baud rate.

Saving Relay Records (Optional)

NOTE: SEL recommends using FTP over Port 5 for retrieving event reports.

SEL recommends saving both relay settings and relay records before upgrading firmware. Depending on the nature of changes in the new firmware release, loading new firmware and performing some troubleshooting operations may delete relay settings and records. Refer to *Section 8: Engineering and Operator Access Interfaces and Tools* and *Event Retrieval and Deletion on page 5.15* for information on saving relay files, including settings and various records. You can save these files through use of Port 5 over an Ethernet LAN prior to the onsite work. This can be performed remotely through use of a machine client rather than manually on site. QuickSet Firmware Loader automates the steps of saving settings and event records prior to performing the firmware upgrade but, because this occurs via Ymodem through the front-panel USB Port F of the relay, time for oscillography record retrieval can be significant (see *Event Download Times on page 5.17*). Consider downloading event records remotely via FTP through the use of Port 5.

Upgrading Firmware Through Use of ACSELERATOR QuickSet Firmware Loader

Connect to the relay, launch QuickSet, navigate to **Tools > Firmware Loader**, and follow the onscreen prompts.

Step 1. In the **Prepare the Device (Step 1 of 4)** window (*Figure B.2*), click the ellipsis button and browse to the location of the new firmware file. Select the file you saved and verified prior to the onsite work and click **Open**. The file location, file name, relay model, and version information appear in the window. Verify that this information is correct, and that the **SELBOOT Max Baud** setting is 115200.

Figure B.2 Prepare the Device (Step 1 of 4) Dialog Window

Step 2. Decide whether you want to save the existing calibration settings, device settings, and event records.

Calibration settings are factory settings necessary for proper relay operation that you must reenter in the unlikely event they are erased during the firmware upgrade. If you select the **Save calibration settings** check box, the Firmware Loader saves these settings in a separate text file at a location you specify.

Device settings are all user-visible settings. If you select the **Save device settings** check box, the Firmware Loader saves these settings in a relay database (.rdb file) at a location you specify.

Event reports are the stored events in the relay (TDR and MHR COMTRADE files). If you select the **Save events** check box, the Firmware Loader saves the events in the same manner as when you download an event for analysis (see *Event Retrieval and Deletion on page 5.15*).

To save all settings and event reports, select all three optional check boxes, as shown in *Figure B.2*. Click **Next** to continue. The following example assumes that you have selected all three.

First, the Firmware Loader prompts you for an appropriate name and location on your PC to which you want to save the settings file, as shown in *Figure B.3*.

NOTE: SEL-T400L event records are large files that can take tens of minutes each to download over the front-panel Port F. If these records must be archived, consider downloading them via FTP over Port 5, preferably prior to the scheduled firmware upgrade work.

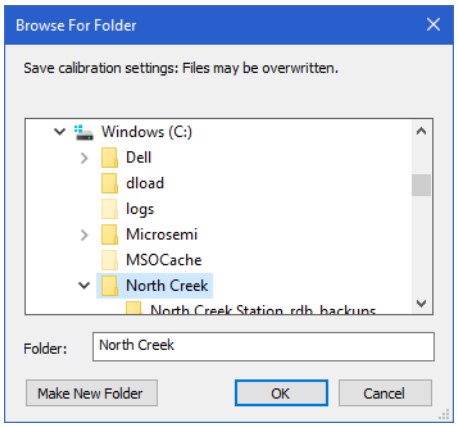

Figure B.3 Save Calibration Settings Dialog Window

Next, the Firmware Loader saves the calibration settings into text files and the device settings in a relay database. If you have an existing relay database, save the settings in that relay database. If no relay database exists, click New to create and name a new database (see *Figure B.4*). In this example, we use a previously created database called Apollo Station, and we name the file to be saved **Line 1**.

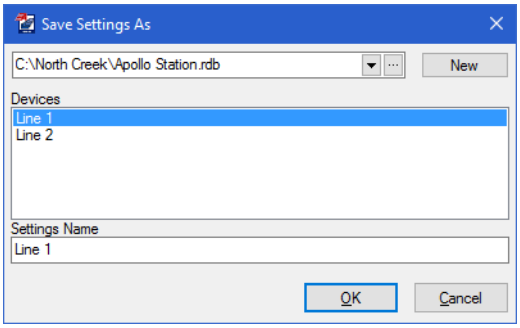

Figure B.4 Save Relay Settings Dialog Window

Finally, the Firmware Loader displays available event reports in the relay, as shown in *Figure B.5*. Select the events you want to save and click **Get Selected Events**.

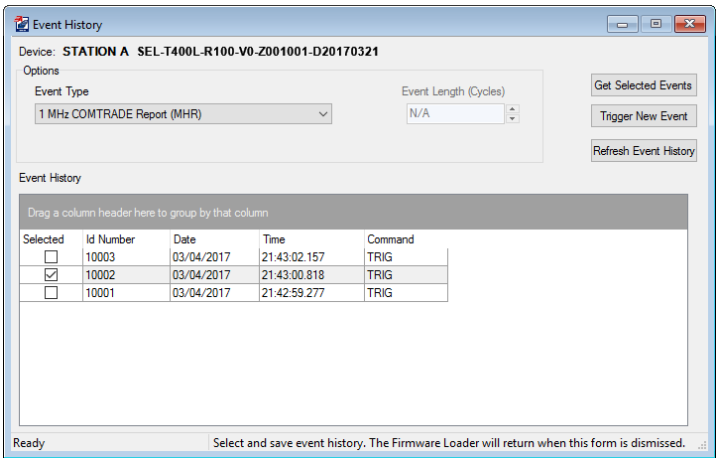

Figure B.5 Selecting Events Reports Dialog Window

A window such as that in *Figure B.6* appears next. Name the event report file, determine a location to which you want to save it, select a file name format, and click **Save**.

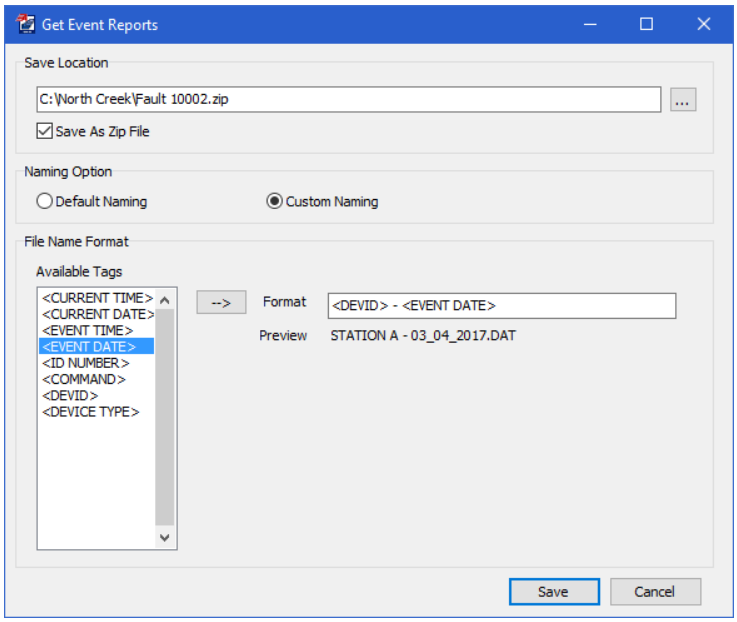

Figure B.6 Event Report Save Details

When the Firmware Loader finishes downloading the events, a window similar to that shown in *Figure B.5* appears again. Click **Finish** to close this window. The window shown in *Figure B.7* appears, confirming that all the settings and event reports were saved and that the Firmware Loader is ready to load the firmware into the relay.

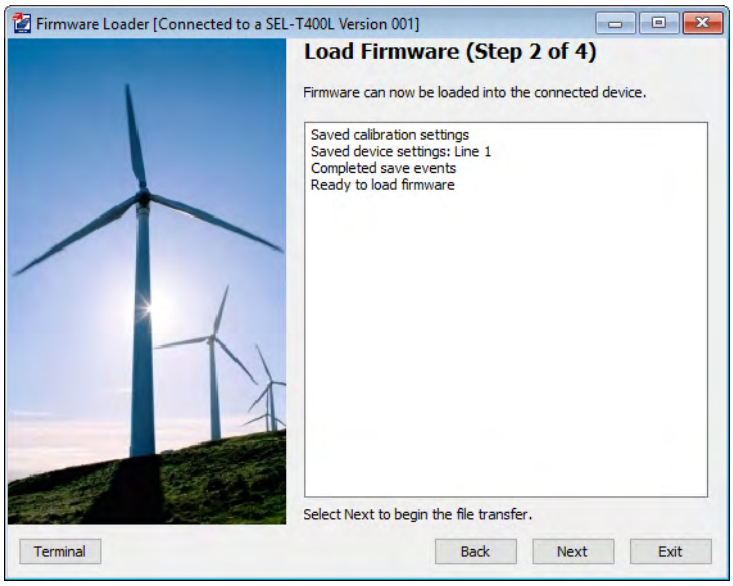

Figure B.7 Load Firmware (Step 2 of 4) Dialog Window

Before you proceed, you may consider saving communications records and SER records from the relay. See *Step 3 on page B.17* in *Upgrading Firmware Through Use of a Terminal Emulator* for instructions.

Step 3. In the dialog box of *Figure B.7*, click **Next** to begin the firmware upgrade.

Figure B.8 shows the **Load Firmware (Step 3 of 4)** window, in which the Firmware Loader enters SELBOOT, maximizes the data rate of the port, erases the existing firmware, and initiates the transfer of the new firmware file (which may take as long as 25 minutes).

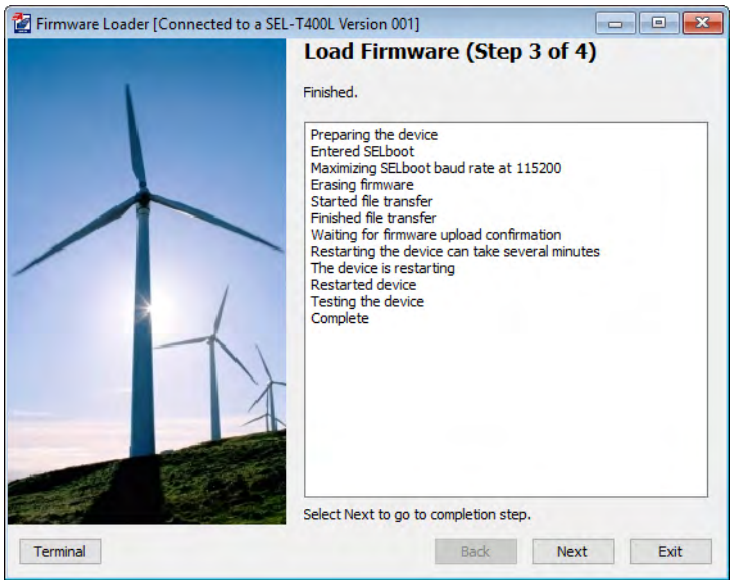

Figure B.8 Load Firmware (Step 3 of 4) Dialog Window

During the firmware file upload, the relay LCD displays the following message: `SELboot`. When the firmware file upload from the PC to the relay is complete, the relay restarts and temporarily loses communication with your PC. The Firmware Loader reestablishes communication and issues an **STA** command to the relay. Inspect the status report for irregularities, and then click **Next** to continue. If you see status failures, go to *Resolving Relay Status Failures on page B.21*.

In some cases, the relay may fail to reconnect to the PC, causing the Firmware Loader to display the message shown in *Figure B.9(a)*. Click **No**, and when the message in *Figure B.9(b)* appears, click **OK**.

(a)

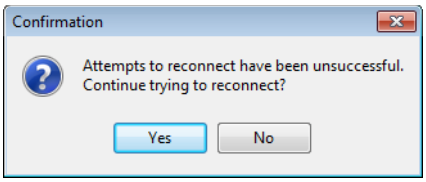

(b)

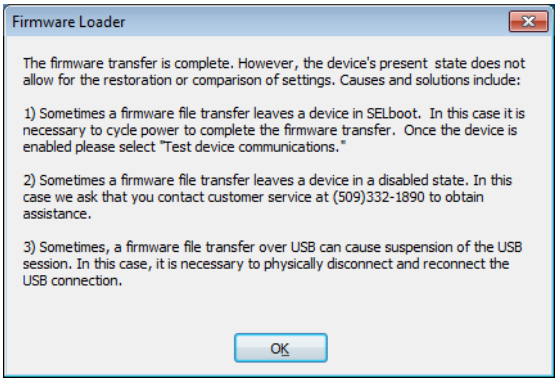

Figure B.9 Failure to Reconnect Prompts

Disconnect the USB cable, wait 10 seconds, and then reconnect the cable. You should see a window similar to *Figure B.8*. Click **Next** to continue.

If the relay does not restart within two minutes of firmware file upload completion, and the relay HMI displays no error messages, turn the relay off and back on. The Firmware Loader application should resume. Click **Yes** if the Firmware Loader prompts you to continue.

If there are no failures, the firmware is installed and the relay is enabled (the **ENABLED** front-panel target LED illuminates green).

Step 4. Compare settings in the relay with an offline copy of the settings. To compare the settings in the relay with saved settings, click **Begin** to the right of **Compare device settings** in the prompt shown in *Figure B.10*.

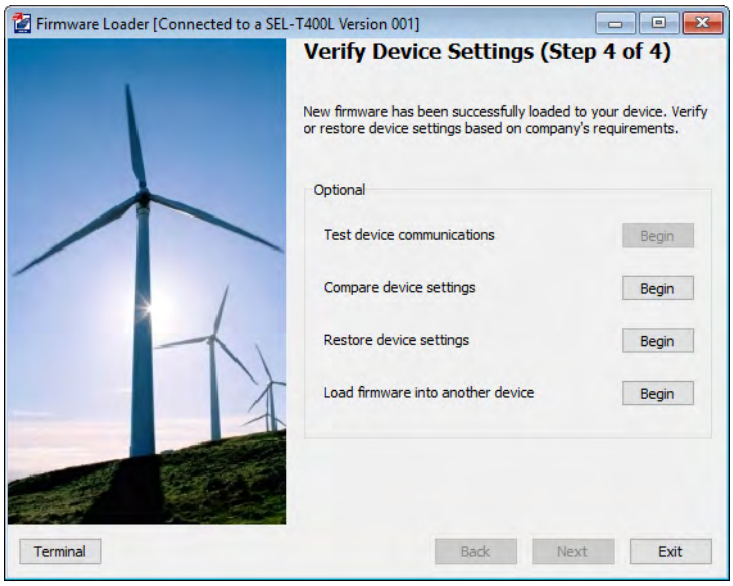

Figure B.10 Verify Device Settings (Step 4 of 4) Dialog Window

The Firmware Loader reads all relay settings from the relay and asks you to identify the location of the database containing the saved files. In this example, select the **Line 1** file in the Apollo Station database (as shown in *Figure B.11*) and click **OK**.

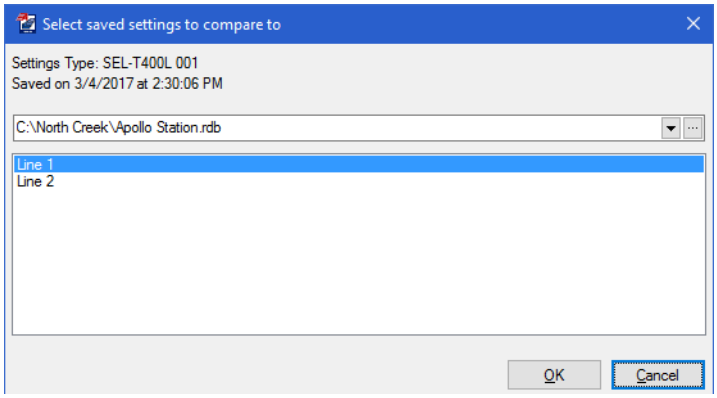

Figure B.11 Selection of the Saved Device Settings File

The Firmware Loader compares the settings in the relay with the settings in the file you just selected and produces a report such as that shown in *Figure B.12*.

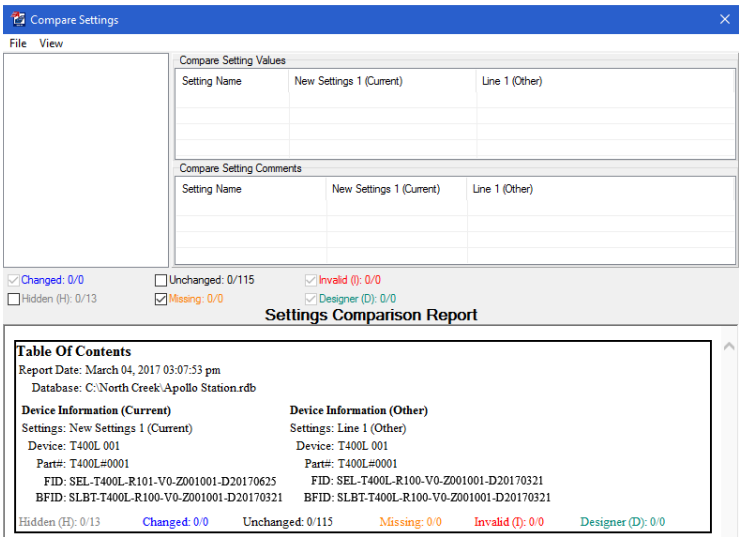

Figure B.12 Sample Settings Comparison Report

There are no changed or missing settings in this case, so you can close the window shown in *Figure B.12*. This concludes the firmware upgrade process. You should see a window similar to *Figure B.10*. Click **Exit**.

If you must change settings because of the firmware upgrade, strongly consider issuing a new settings file, bringing it with you onsite, and loading it onto the relay. You can then use the settings compare feature to verify the loaded settings against the offline file containing the issued settings, and save the settings from the relay to a file marked as left in service. The next optional step describes this procedure.

Step 5. Load new settings to the relay (optional). In the **Verify Device Settings (Step 4 of 4)** window, shown in *Figure B.10*, you can use the **Restore device settings** option to load any settings file in the relay.

Click **Begin** next to **Restore device settings** (shown in *Figure B.10*), and in the window shown in *Figure B.13*, select the settings file you want to load and click **OK**.

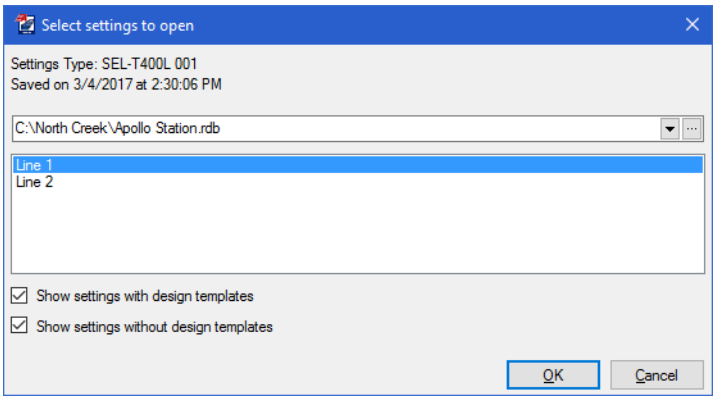

Figure B.13 Selecting Settings File to Load to the Relay

In the resulting prompt, shown in *Figure B.14*, select the specific settings class within the settings files and click **OK** again.

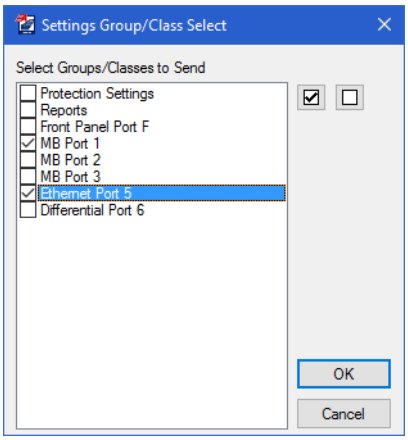

Figure B.14 Selecting Settings Class to Load to the Relay

The Firmware Loader sends the selected settings to the relay. Once the new settings have been uploaded to the relay, refer to *Step 4 on page B.12* for instructions on comparing the newly loaded settings against the original settings copy. This concludes loading settings; click **Exit** in the **Verify Device Settings (Step 4 of 4)** window (shown in *Figure B.10*) to exit the Firmware Loader.

Upgrading Firmware Through Use of a Terminal Emulator

These instructions assume you have a working knowledge of your terminal emulator. In particular, you must be able to select a transfer protocol (1K Xmodem, for example) and transfer files (send and receive files).

Connect to the relay and launch your terminal emulator.

Step 1. Go to Access Level 2 as follows.

Type **ACC <Enter>**, type the Access Level 1 password, and press **<Enter>**. Type **2AC <Enter>**, type the Access Level 2 password, and press **<Enter>**. You will see the Access Level 2 prompt (=>>).

Step 2. Decide whether you want to save calibration settings, relay settings, event records, or communications logs. If so, use the **FILE READ** command to transfer files of interest from the relay to your PC.

The following example shows how to use the **FILE READ** command to download the settings files from the relay to your PC. Calibration settings are available only from Access Level C, so to save them, you will need to enter Access Level C by typing **CAL <Enter>** from Access Level 2. Type the Access Level C password and press **<Enter>**. If successful, you will see the Access Level C ==>> prompt.

To see the folders in the relay, type **FILE DIR <Enter>**. The relays responds as follows:

```
==>>FILE DIR <Enter>

CFG.TXT                                                R   2017/03/04 19:19:28
SETTINGS                                               R D 2017/02/21 00:00:00
EVENTS                                                 R D 2017/03/04 19:19:28
DIAGNOSTICS                                            R D 2017/03/04 19:19:28
REPORTS                                                R D 2017/03/04 19:19:28

==>>
```

To see all settings files, type **FILE DIR SETTINGS <Enter>**. The relays responds as follows:

```
==>>FILE DIR SETTINGS <Enter>

ERR.TXT                                                R   2017/03/04 19:20:37
SET_ALL.TXT                                            R   2017/03/04 19:20:37
SET_1.TXT                                              RW  2017/03/04 18:24:20
SET_R.TXT                                              RW  2017/03/04 04:49:50
SET_P1.TXT                                             RW  2017/03/04 17:46:56
SET_P2.TXT                                             RW  2017/03/04 06:12:15
SET_P3.TXT                                             RW  2017/03/04 04:49:50
SET_PF.TXT                                             RW  2017/03/04 04:49:50
SET_P5.TXT                                             RW  2017/03/04 18:00:12
SET_P6.TXT                                             RW  2017/03/04 17:12:35

==>>
```

The SET_CA.TXT and SET_CM.TXT files are the calibration settings files.

Although the SET_ALL.TXT file contains all settings, this file is read-only and you cannot use it to restore settings. To download all the settings from the relay to your PC, you must individually download each read/write (RW) file. Following is an example of how to download the SET_CA.TXT file. Follow the same procedure for the remaining files:

From Access Level C, type **FILE READ SETTINGS SET_CA.TXT <Enter>**. The relay responds with the following message:

```
==>>FILE READ SETTINGS SET_CA.TXT <Enter>
#000 Ready to send file
```

At the `#000 Ready to send file` response, use the appropriate transfer function of your terminal emulator to download the settings file from the relay and store it in a location of choice on your PC.

When the transfer completes, the relay responds as follows:

```
#001 Transfer Complete

==>>
```

After collecting all files and records you want to collect, continue to the next step to start the firmware upgrade process.

Step 3. Decide what other relay information you want to save and save it manually by using SEL ASCII commands. Save or copy the relay responses to store the information in a text file by performing the following actions.

First, enable terminal logging capture (if using QuickSet, **Communications > Logging > Terminal Logging**; see *PC Software on page 8.14* for more information). QuickSet prompts you for the file name and location to which you want to store the terminal session. After specifying the file and location, issue SEL ASCII commands as necessary to collect the desired information. The following list shows the SEL-T400L commands that allow you to gather various reports relevant to the state of the relay, the protected line, and the communications channels.

- **COM P*n*** (*n* = 1–3) to capture MIRRORED BITS communications logs
- **COM TW87** to capture the Port 6 direct point-to-point fiber-optic channel communications log
- **ETH** to capture the Ethernet Port 5 communications log
- **SER** to capture the Sequential Events Records report
- **STA** to capture relay status information

QuickSet saves the relay responses to the commands you enter to the file you specified when enabling logging. Upon completing this optional task, disable terminal logging (**Communications > Logging > Terminal Logging**).

Step 4. Initialize the SELBOOT program in the relay.

From Access Level 2, type **L_D <Enter>**. The relay responds, `Disable relay to send or receive firmware (Y/N)?` Type **Y <Enter>** to confirm, and then **Y <Enter>** to confirm a second time. The relay responds, `Relay Disabled`.

The front-panel LCD screen displays `SELboot`. Wait for the SELBOOT program to load.

When the relay finishes loading the SELBOOT program, it responds with the SELBOOT prompt (!>) in the terminal emulator, and the relay front-panel LCD continues to display `SELboot`.

Press **<Enter>** to confirm that the relay is in SELBOOT; your terminal emulator should display another SELBOOT prompt (!>). In this state the relay is ready to receive new firmware.

Step 5. Upgrade to new SELBOOT firmware (if needed).

Skip this step if you do not need to upgrade the SELBOOT firmware, and proceed to *Step 6 on page B.18*.

At the SELBOOT prompt (!>), type **REC BOOT <Enter>**, and enter **Y** when prompted to erase the present SELBOOT firmware.

```
!>REC BOOT <Enter>
Caution! This command erases the SELboot firmware.
Do not interrupt power during SELboot upload
or the device may require factory reprogramming.

Are you sure you want to erase the existing firmware (Y/N)?
```

The relay prompts you to begin the file transfer. Press any key to begin the file transfer to the relay. Using an Xmodem file transfer protocol, select the new SELBOOT file (SLBT-T400L_R*nnn*-V*x*.zds).

Upon successful negotiation of the new SELBOOT firmware file, the old SELBOOT firmware is erased, the new SELBOOT firmware is written to the relay memory, and the relay restarts running the new SELBOOT firmware.

```
Erasing SELboot.
Writing SELboot.
SELboot upload completed successfully. Press any key to restart.

Close the USB port and remove the USB cable.

Attempting a restart in 5 seconds.

!>
```

Once the relay restarts in SELBOOT, the SELBOOT prompt (!>) appears in the terminal window, indicating completion of the SELBOOT upgrade. Typically, you would then continue with upgrading the main firmware file.

Step 6. Upgrade to new relay firmware.

From the SELBOOT prompt (!>), type **REC <Enter>**. The relay responds with the prompt shown in *Figure B.15*. Acknowledge that you want to erase the existing firmware by typing **Y <Enter>**.

The relay responds, `Erasing firmware`, and erases the present firmware. This process may take several minutes.

When it finishes erasing the present firmware, the relay responds, `Erase successful`, and prompts you to press any key to begin transferring the new firmware.

```
!>REC <Enter>
Caution! This command erases the firmware.
If you erase the firmware then new firmware
must be loaded before returning the IED to service.

Are you sure you want to erase the existing firmware (Y/N)? Y <Enter>
Erasing firmware.
Erase successful.
Press any key to begin transfer and then start transfer at the terminal.
```

Figure B.15 Transferring New Firmware

Press **<Enter>** to begin uploading the new firmware. The relay displays one or more characters, such as "CCC" at the end of *Figure B.15*, while waiting for your terminal emulator to send the new firmware. If you do not start the transfer within about 20 seconds, the relay times out and responds, `Upload failed; communications failed`. If this happens, begin again by typing **REC <Enter>**.

Start the **Transfer** or **Send** process in your terminal emulator. Use **1K Xmodem** for fast transfer of the new firmware to the relay. If the computer does not have **1K Xmodem**, select **Xmodem**. Navigate to the location of the new firmware file (.zds file) and begin the file transfer.

The LCD screen shows `SELboot` while the relay loads the new firmware. Wait for completion of the file transfer, which typically takes as long as 25 minutes with 1K Xmodem.

When finished loading the new firmware, the relay responds as follows and begins validating the firmware:

```
Validating firmware. Please stand by.
```

After the relay validates the firmware, the following message appears.

```
Upload completed successfully. Press any key to restart.
```

Press any key to continue. When the following message appears, disconnect the USB cable from the relay:

```
Close the USB port and remove the USB cable.
Attempting a restart in 5 seconds.
```

Wait for approximately one minute for the relay to complete the restart and diagnostic checks, and then reconnect the USB cable. Press **<Enter>** to reestablish communication with the relay. The relay will respond with the Access Level 0 prompt (=).

Step 7. Verify firmware revision and relay status.

From Access Level 2 check the firmware version by typing **VER <Enter>**. The relay responds with the version report. Confirm the relay is running the intended versions of the SELBOOT firmware and the relay firmware.

From Access Level 2, issue the status command by typing **STA <Enter>**. The relay responds with the status report. Review the relay status report for failures and warnings. Resolve any failures according to the instructions at *Resolving Relay Status Failures on page B.21*.

Normally, the relay shows no errors and the **ENABLED** target LED illuminates green.

If the relay does not illuminate the **ENABLED** LED within one minute after it displays the `Attempting a restart in 5 seconds` message, contact your Technical Service Center or the SEL factory for assistance.

Step 8. Compare settings in the relay with the offline settings file.

SEL recommends using QuickSet to compare settings. Launch QuickSet and use the **Read** option from the welcome screen (see *QuickSet Interface on page 8.18*) to save the settings from the relay. Next, use the QuickSet compare utility found in the **Edit** menu to compare the presently selected relay settings instance with the desired saved settings. A comparison report like that in *Figure B.12* will appear. Use this report to verify each settings difference between the current settings and the offline settings file. This report can be printed or saved for archival purposes.

You can also use the **SHO** command to view settings, but it is a good practice to work with settings files rather than viewing individual settings and comparing them manually with expected values.

If you need to change settings because of a firmware upgrade, strongly consider issuing a new settings file, bringing it with you on site, and loading it onto the relay (see *Evaluating Settings Changes and Preparing Settings Files for the New Firmware on page B.4* for additional information). You can use the QuickSet compare utility to verify the loaded settings against the offline file containing the issued settings, and then save the settings from the relay to a file marked as left in service. The next optional step describes this procedure.

Step 9. Load new settings to the relay (Optional).

Use the **FILE WRITE** command to save settings to the relay. The following example shows how to use the **FILE WRITE** command from your terminal emulator to upload the Port 1 settings file from your PC to the relay. To upload other files with the **FILE WRITE** command, use the same command and folder (**FILE WRITE SETTINGS**), but enter the appropriate file name. To restore the calibration settings, issue the **FILE WRITE** command from Access Level C.

At the Access Level 2 prompt, type the following:

=>>FILE WRITE SETTINGS SET_P1.TXT <Enter>

The relay responds as follows:

```
FILE WRITE SETTINGS SET_P1.TXT
CC
```

In your terminal emulator, select **Send file** (through use of Ymodem) and select the SET_P1.TXT file from where you saved it on your PC. Click the appropriate command in the terminal emulator to send the file to the relay. When the relay receives the file, it responds as follows:

```
=>>FILE WRITE SETTINGS SET_P1.TXT
CCCC#001 Transfer Complete
=>>
```

After saving all settings classes to the relay, issue the **STA** command and verify the relay operates normally and that the **ENABLED** target LED is illuminated green.

Troubleshooting Firmware Upgrade Problems

Resolving Relay Status Failures

If the relay returns a status failure message in response to the **STA** command, perform the following steps:

Step 1. From Access Level 2 issue the **STA C** command to clear the status and restart the relay, and type **Y <Enter>** when prompted for confirmation. The relay responds with `Rebooting the relay`. Wait for approximately 30 seconds, and then press **<Enter>** until you see the Access Level 0 prompt (=).

Step 2. Issue the **STA** command again to display the status report. Check the report for failures.

Step 3. If there are no failure messages, proceed with the next steps in your procedure.

Step 4. If the relay reports status failures, continue with the following steps.

Step 5. From Access Level 2, issue the **R_S** command to restore factory-default settings in the relay. The relay prompts whether to restore default settings. Acknowledge by typing **Y <Enter>**.

NOTE: Issuing the **R_S** command erases settings and other important data. Be sure to retain relay settings and other data downloaded from the relay at the start of the firmware upgrade process. Relay calibration level settings will not be erased when you issue the **R_S** command.

If the relay does not accept the **R_S** command, contact SEL for assistance.

The relay can take as long as two minutes to erase present settings and restore default settings. The relay then restarts and illuminates the **ENABLED** target LED green.

From Access Level C, verify the calibration settings by downloading the SET_CA.TXT and SET_CM.TXT files using the **FILE READ SETTINGS SET_CA.TXT <Enter>** and **FILE READ SETTINGS SET_CM.TXT <Enter>** commands, and comparing these files with the saved files.

If the calibration settings do not match the settings contained in the text file you recorded, contact SEL for assistance.

The **R_S** command resets relay passwords to default values. Remember to set unique passwords by following your company procedures. Use the **PAS *level*** (*level* = 1, B, 2, and C) command to set the relay passwords.

The **R_S** command resets relay settings to default values. Remember to restore relay settings for your relay by using either QuickSet (refer to *Working With Settings Files on page 8.20*) or the **FILE WRITE** command (refer to *Step 9 on page B.20*).

From Access Level 2, issue the **STA** command again and check the status report for failures. If any failure status messages persist, see *Appendix F: Diagnostics*, or contact SEL for assistance.

Technical Support

We appreciate your interest in SEL products and services. If you have questions or comments, please contact us at:

Schweitzer Engineering Laboratories, Inc.
2350 NE Hopkins Court
Pullman, WA 99163-5603 U.S.A.
Tel: +1.509.338.3838
Fax: +1.509.332.7990
Internet: selinc.com/support
Email: info@selinc.com

APPENDIX C

SEL ASCII Commands

Introduction

This appendix lists and explains the SEL ASCII commands supported by the SEL-T400L. Use SEL ASCII commands to view and modify settings, obtain status and metering data from the relay, or instruct the relay to perform an operation such as triggering an event record.

Commands, command options, and command variables are shown in bold. Lowercase italic letters and words in a command represent command variables that you determine based on the application (for example, port number *n* = 1–3).

You can shorten any SEL ASCII command to the first three characters; for example, **ACCESS** becomes **ACC**. Always send a carriage return <CR> character, or a carriage return character followed by a line feed character <CR><LF>, to instruct the relay to process the command. Most terminals and terminal programs interpret the **<Enter>** key as a <CR>. For example, to send the **ACCESS** command, type **ACC <Enter>**.

Tables in this section show the access level(s) where the command or command option is active. Some commands return a different level of information or perform a different function when issued at different access levels. The relay responds with `Invalid Access Level` if you enter a command from an access level lower than the specified access level for the command.

SEL ASCII Command Reference

Table C.1 lists the SEL ASCII commands available in the SEL-T400L for engineering, maintenance, and testing tasks (categorized by function).

Table C.1 SEL ASCII Command Reference (Sheet 1 of 3)

SEL ASCII Command	Description	Access Level	Examples
Access Control and Security			
ACCESS	Go to Access Level 1 (monitoring) to view relay data.	0	**ACC <Enter>**
BACCESS	Go to Access Level B (breaker) to test control outputs.	1	**BAC <Enter>**
2ACCESS	Go to Access Level 2 (full relay control) for full user privileges including settings changes and clearing records.	1, B	**2AC <Enter>**
QUIT	Exit to Access Level 0 for security after working at higher access levels.	1, B, 2	**QUI <Enter>**
EXIT	Terminate a Telnet session and exit to Access Level 0 after working at higher access levels.	0, 1, B, 2	**EXI <Enter>**

Table C.1 SEL ASCII Command Reference (Sheet 2 of 3)

SEL ASCII Command	Description	Access Level	Examples
PASSWORD	Change access level passwords.	2	**PAS 1 <Enter>** **PAS B <Enter>**
CALIBRATION	Go to Access Level C (calibration). Use only under SEL supervision. Access Level C supports all SEL ASCII commands.	2	**CAL <Enter>**
Relay Identification			
ID	View relay identification information (serial number, firmware revision, etc.).	0, 1, B, 2	**ID <Enter>**
VERSION	View revision information.	1, B, 2	**VER <Enter>**
MAC	View Media Access Control (MAC) addresses for transceivers in Ports 5 and 6.	1, B, 2	**MAC <Enter>**
ETHERNET	View configuration, status, and performance statistics (ETH) or clear performance statistics (ETH C/R) for the Ethernet Port 5.	1, B, 2	**ETH <Enter>** **ETH C <Enter>**
Configuring the Relay			
SET	Edit settings values.	2	**SET <Enter>** **SET Z1MAG <Enter>** **SET P 6 <Enter>**
SHOW	View settings values.	1, B, 2	**SHO <Enter>** **SHO Z1MAG <Enter>** **SHO P 6 <Enter>**
TIME	View (TIM) or set (TIM *hh:mm:ss*) time.	1, B, 2	**TIM <Enter>** **TIM 09:00:00 <Enter>**
DATE	View (DAT) or set (DAT *yyyy/mm/dd*) date.	1, B, 2	**DAT <Enter>** **DAT 2017/01/20 <Enter>**
Records, Historical and Static Data			
HISTORY	View (HIS) or clear (HIS C) the event records HISTORY report. Issuing HIS C deletes event records from relay.	1, B, 2	**HIS <Enter>** **HIS 10 <Enter>** **HIS C <Enter>**
SUMMARY	View event summary.	1, B, 2	**SUM <Enter>** **SUM N <Enter>**
SER	View (SER and SER D) or clear (SER C) Sequential Events Recorder logs.	1, B, 2	**SER <Enter>** **SER 23 28 <Enter>** **SER 2017/01/20 2017/01/31 <Enter>**
LIMO	View the line monitoring alarm information (LIMO), view the event counters (LIMO location, LIMO location1 location2), and clear the event counters (LIMO C, LIMO location C and LIMO location1 location2 C).	1, B, 2	**LIMO <Enter>** **LIMO 9.51 <Enter>** **LIMO 9.50 C <Enter>** **LIMO 9 10 <Enter>** **LIMO 9 10 C <Enter>** **LIMO C <Enter>**
SHOW	View settings values.	1, B, 2	**SHO <Enter>** **SHO Z1MAG <Enter>** **SHO P 6 <Enter>**
TRIGGER	Trigger oscillography record.	1, B, 2	**TRI <Enter>**
FILE	View file directory (FIL DIR), transfer settings from the relay to the PC (FIL READ), or transfer files from the PC to the relay (FIL WRITE).	1, B, 2	**FIL DIR <Enter>** **FIL READ SETTINGS SET_P1.TXT <Enter>**

Table C.1 SEL ASCII Command Reference (Sheet 3 of 3)

SEL ASCII Command	Description	Access Level	Examples
Communications			
COMMUNICATIONS	View (COM P*n*) or clear (COM P*n* C) performance statistics for MIRRORED BITS Port *n*.	1, B, 2	**COM P1 <Enter>** **COM P1 C <Enter>**
LOOP	Start (LOO *n*) loopback mode (override address checking) for MIRRORED BITS Port *n* while forcing the received bits to logical 0. Start (LOOP *n* DATA) loopback mode to pass the actual sent bits back as received bits, and terminate (LOOP *n* R) loopback mode for a MIRRORED BITS Port *n*.	2	**LOO 2 <Enter>** **LOO 2 DATA <Enter>** **LOO 2 R <Enter>**
COM TW87	View (COM TW87) or clear (COM TW87 C/R) performance statistics for the direct point-to-point fiber-optic channel on Port 6.	1, B, 2	**COM TW87 <Enter>** **COM TW87 C <Enter>**
ETHERNET	View configuration, status, and performance statistics (ETH) or clear performance statistics (ETH C/R) for the Ethernet Port 5.	1, B, 2	**ETH <Enter>** **ETH C <Enter>**
MAC	View Media Access Control (MAC) addresses for transceivers in Ports 5 and 6.	1, B, 2	**MAC <Enter>**
STATUS	View relay status including internal diagnostics.	1, B, 2	**STA <Enter>**
Testing and Commissioning			
METER	View voltage, current, and frequency metering.	1, B, 2	**MET <Enter>** **MET 10 <Enter>**
PLAY	View playback files (PLA), use PLA *n* to playback TEST-FILE*n*, PLA *n hh:mm:ss* to playback TESTFILE*n* at *hh:mm:ss*, PLA X to cancel scheduled playback, and PLA C to delete playback files (*n* = 1–5).	1, B, 2	**PLA 5 10:30:00 <Enter>**
TWTEST	Start (TWT) or terminate (TWT X) the TW test mode.	2	**TWT <Enter>**
PULSE	Close a relay contact output (requires BREAKER jumper in the enabled position).	B	**PUL TPA1 <Enter>**
TEST DB2	Force digital and analog DNP inputs for testing (TEST DB2 D/A name value) or clear test values (TEST DB2 OFF).	B, 2	**TEST DB2 D IN101 1 <Enter>** **TEST DB2 A IA 100 <Enter>**
TARGET	View Relay Word bit values.	1, B, 2	**TAR LIST <Enter>** **TAR LOP <Enter>**
TRIGGER	Trigger oscillography record.	1, B, 2	**TRI <Enter>**
STATUS	View relay status including internal diagnostics.	1, B, 2	**STA <Enter>**
Firmware Upgrade and Advanced Tasks			
L_D	Halt relay program and go to SELBOOT in preparation to receive new firmware.	2	**L_D <Enter>**
R_S	Factory reset (restore factory configuration, clear records, and restart the relay).	2	**R_S <Enter>**
STATUS	View relay status (STA) including internal diagnostics, and clear (STA C/R) all diagnostic alarms and failures.	1, B, 2	**STA C <Enter>**
VECTOR	View internal relay records for SEL use only. Use VEC only under SEL supervision.	2	**VEC <Enter>**

The Common Header in Reports Generated by SEL ASCII Commands

The SEL-T400L responds to some SEL ASCII commands with information formatted as a report. These commands are **COM**, **COM TW87**, **HIS**, **SUM**, **SER**, **MAC**, **ETH**, **STA**, **MET**, and **TIM Q**. The reports include common header lines, which provide basic information about the relay and the report itself. Briefly inspect the header lines to ensure you are viewing or saving a report for the correct relay. When saving a report for your internal documentation or forwarding it to others (including SEL), always include the header lines to make sure your report data are unambiguously associated with the relay identification information and that your data are dated and time-stamped.

Figure C.1 defines the items in the header, and *Figure C.2* shows a sample header. *Table C.2* explains the individual data items and includes comments and troubleshooting guidelines. The FID field is included for most reports.

```
RID                                        Date: yyyy/mm/dd  Time: hh:mm:ss.xxx
SID                                        Time Source: x
                                           Serial Number: nnnnnnnnnn

FID=SEL-T400L-Rnnn-Vx-Zssspp-Dyyyymmdd     CID=nnnn
```

Figure C.1 Data Items in the Common Header of SEL ASCII Command Reports

```
SEL-T400L                                  Date: 2017/03/04  Time: 18:28:32.279
Station A                                  Time Source: HIRIG
                                           Serial Number: 1170231369

SEL-T400L-R100-V0-Z001001-D20170321        CID=FB54
```

Figure C.2 Sample Common Header of SEL ASCII Command Reports

Table C.2 Information Included in the SEL ASCII Report Header Lines (Sheet 1 of 2)

Data Item	Description	Comments and Troubleshooting
RID	Relay identifier specified by the RID setting	Check if the relay and station identifier match expected values to make sure you are viewing a report from the correct relay, especially when you do not receive the report directly from the relay on site.
SID	Station identifier specified by the SID setting	
Date	Date of the report based on the relay calendar; *yyyy/mm/dd* is the date	Check if the report date and time are as expected to make sure you are viewing the correct report, especially when you do not receive the report directly from the relay on site.
Time	Time of the report based on the relay clock; *hh:mm:ss.xxx* is the time down to a millisecond	
Time Source	Time synchronization mode. Possible sources are the following: Free Running, HIRIG, Remote Free Running, and Remote HIRIG.	If Time Source is HIRIG or Remote HIRIG, the relay clock is locked to a high-quality external time source. If Time Source is Free Running, the relay is relying on its internal oscillator and is likely to drift away from the accurate absolute value. Consider making a note of the actual time when you capture a report. If the Time Source is not HIRIG while a functioning time source is connected to the IRIG input (i.e., the relay does not consider the time source to be a high-accuracy source), inspect your IRIG connection and time source and use the **TIM Q** command to gather more information about the time source problem. Consider using a DNP Master or the **TIM** command to set the relay clock when an IRIG time source is not available. Note that if the point-to-point fiber-optic channel is available on Port 6, the local relay may operate in the Remote Free Running mode with time sourced by the internal oscillator of the remote relay or in the Remote HIRIG mode by using the high-accuracy external time source connected to the remote relay. See *Appendix H: High-Accuracy Timekeeping* for more information.

Table C.2 Information Included in the SEL ASCII Report Header Lines (Sheet 2 of 2)

Data Item	Description	Comments and Troubleshooting
Serial Number	Relay serial number	Check if the relay serial number matches the expected value to verify that you are viewing the report from the correct relay.
FID	Firmware identification string for SEL devices	Inspect the FID string to ensure the relay is running the expected firmware revision. See *Appendix B: Firmware Upgrade Instructions* for more information.
SEL-T400L	Product name	
R	Firmware revision; *nnn* is the revision number	
V	Firmware version; *x* is the version number	
Z	Settings and HMI version numbers; *sss* is the settings version number and *ppp* is the HMI version number	
D	Firmware date code; *yyyymmdd* is the date	
CID	Firmware file checksum	Use the firmware checksum as an independent extra check of the firmware version. Use the firmware verification tool available at selinc.com to verify authenticity of firmware files. See *Appendix B: Firmware Upgrade Instructions* for more information.

Description of Commands

The list of SEL ASCII commands is divided into two parts. *Commands for Engineering Tasks on page C.5* describes commands typically—but not exclusively—used by human operators performing engineering, testing, or commissioning tasks. *Commands for Machine Clients on page C.21* describes commands typically issued by machine clients in integration applications such as supervisory control and data acquisition (SCADA) or a human-machine interface (HMI).

Commands for Engineering Tasks

2ACCESS

Use the **2AC** command to go to Access Level 2. Access Level 2 allows you to both read and write data such as to change relay settings. The relay prompts for a password in response to the **2AC** command (see *Access Control and Passwords on page 8.35* for more information; the default password for Access Level 2 is TAIL).

Table C.3 2AC Command

Command	Description	Access Level
2AC	Go to Access Level 2 (full relay control).	1, B

ACCESS

Use the **ACC** command to go to Access Level 1. Access Level 1 allows you to read data, but not write data. The relay prompts for a password in response to the **ACC** command (see *Access Control and Passwords on page 8.35* for more information; the default password for Access Level 1 is OTTER).

Table C.4 ACC Command

Command	Description	Access Level
ACC	Go to Access Level 1 (monitoring).	0

BACCESS

Use the **BAC** command to go to Access Level B. Access Level B allows you to control relay outputs (via the **PULSE** command) in addition to providing all Access Level 1 privileges. The relay prompts for a password in response to the **BAC** command (see *Access Control and Passwords on page 8.35* for more information; the default password for Access Level B is EDITH).

Table C.5 BAC Command

Command	Description	Access Level
BAC	Go to Access Level B (breaker).	1

CALIBRATION

Use the **CAL** command to go to Access Level C (calibration). Access Level C is intended for use by the SEL factory and by SEL field service personnel. Do not enter Level C except as directed by SEL. (See *Access Control and Passwords on page 8.35* for more information; the default password for Access Level C is CLARKE.)

Table C.6 CAL Command

Command	Description	Access Level
CAL	Go to Access Level C (calibration).	2

COMMUNICATIONS

The **COM P*n*** command displays communications statistics for the MIRRORED BITS communications channels. For more information on MIRRORED BITS communications statistics, see *MIRRORED BITS COM Report on page 3.11*.

Table C.7 COM Command

Command	Description	Access Level
COM P*n*	Return a summary report for MIRRORED BITS communications on Port *n*, where *n* = 1, 2, or 3.	1, B, 2
COM P*n* C	Clear channel statistics for Port *n*, where *n* = 1, 2, or 3.	B, 2

The P*n* option in the **COM** command is **P1** for MIRRORED BITS Port 1, **P2** for MIRRORED BITS Port 2, and **P3** for MIRRORED BITS Port 3.

COM TW87

The **COM TW87** command provides a report of the differential Port 6 communications channel statistics. The report shows important information such as lost packet count, relay synchronization, and link delay. (see *COM TW87 Report on page 3.20* for more information). This command is only available if Port 6 is enabled (EPORT = Y). To clear the statistics, issue the **COM TW87 C/R** command.

Table C.8 COM TW87 Command

Command	Description	Access Level
COM TW87	Returns the TW87 communications channel statistics.	1, B, 2
COM TW87 *n*	Returns the TW87 communications channel statistics *n* times, where *n* = 1–32767.	1, B, 2
COM TW87 C/R	Clears the TW87 report.	B, 2

DATE

Use the **DAT** command to view and set the relay date. The relay can use other time sources, such as IRIG-B, to overwrite the date you enter. Enter the **DAT** command with a date to set the internal clock date. The **DAT** format is yyyy/mm/dd. You can separate the month, day, and year parameters with spaces, commas, slashes, colons, or semicolons.

If you enter a valid date and the relay time synchronization source is listed as Free Running (see *Table C.2* and *Appendix H: High-Accuracy Timekeeping*), the relay saves the date and updates the real-time clock. If any other time synchronization source is listed (i.e., the relay is receiving time from other time sources), the relay rejects the **DAT** command set request and instead displays the current internal clock date.

Table C.9 DAT Command

Command	Description	Access Level
DAT	Display the internal clock date.	1, B, 2
DAT *yyyy/mm/dd*[a]	Set the internal clock date to *yyyy/mm/dd*.	1, B, 2

[a] Where: *yyyy* = year (2000–2199), *mm* = month of year (1–12), *dd* = day of month (1–31).

ETHERNET

The **ETH** command displays the Ethernet Port 5 configuration and status. Use the **ETH** command when troubleshooting Ethernet connections. The **ETH C** and **ETH R** commands clear the Ethernet connection statistics. See *ETHERNET Report on page 8.50* for more information.

Table C.10 ETH Commands

Command	Description	Access Level
ETH	Displays information about Ethernet Port 5.	1, B, 2
ETH C/R	Clears the connection statistics for Ethernet Port 5.	1, B, 2

EXIT

Use the **EXI** command to terminate a Telnet session and go to Access Level 0.

Table C.11 EXI Command

Command	Description	Access Level
EXI	Terminate any Ethernet port Telnet sessions and go to Access Level 0.	0, 1, B, 2

FILE

When you use the Ymodem file transfer protocol, the **FILE** command allows you to transfer files between intelligent electronic devices (IEDs) and external software.

Table C.12 FILE Command

Command	Description	Access Level
FILE DIR *[directory]*	Returns a list of file names in a specified directory (*directory*). If a directory is not specified, then the list of files and directories in the root directory is returned.	1, B, 2
FILE READ *[directory] filename*	Initiates a file transfer of the file *filename* (in the folder *directory*) from the relay to external support software. The *filename* parameter is required.	1, B, 2
FILE WRITE SETTINGS *[directory] filename*	Initiates a file transfer of the file *filename* (in the folder SETTINGS, subdirectory *directory*) from external support software to the relay. If the *filename* parameter is not specified, the file name must be given in the Ymodem header.	2

All text enclosed in [brackets] indicates optional command line parameters. File directories in the SEL-T400L are EVENTS, REPORTS, SETTINGS, and DIAGNOSTICS. For **FILE READ** operations, specify the directory parameters as needed. The **FILE WRITE** command is available only for the SETTINGS directory. See *Section 9: SCADA and HMI Protocols* for more information about the SEL-T400L files.

HISTORY

The **HIS** command displays a history report of stored events that the relay has captured. The rows in the HISTORY report include the event number, date, time, event type, fault location, maximum current, frequency, and targets (see *HISTORY Report on page 5.13* for more information). Use the **HIS** command to list one-line descriptions of relay events. The **HIS C** command clears the history data and corresponding event records.

Table C.13 HIS Command

Command	Description	Access Level
HIS	Return all event records stored in the relay with the oldest at the bottom of the list and the most recent at the top of the list.	1, B, 2
HIS *k*	Return the *k* most recent event records stored in the relay with the oldest at the bottom of the list and the most recent at the top of the list.	1, B, 2
HIS C	Clears all event record data from the relay.	2

L_D

The **L_D** command halts the relay program and exits to the flash boot program SELBOOT. SELBOOT allows you to send or receive relay firmware. See *Upgrading Firmware Through Use of a Terminal Emulator on page B.15* for a usage example.

Table C.14 L_D Command

Command	Description	Access Level
L_D	Exits to SELBOOT.	2

LIMO

Use the LIMO command to obtain line monitoring information including total event count for the line, alarm status, and event counters. Use the LIMO command to clear the event counters for a selected range of locations after remediation of the root cause of the alarm.

Table C.15 LIMO Command

Command	Description	Access Level
LIMO	Displays the line monitoring alarm including alarm location and event counts.	1, B, 2
LIMO *a*	Displays event counter for location *a*.	1, B, 2
LIMO *a* C	Clears event counter for location *a*.	2
LIMO *a b*	Displays event counters for locations between *a* and *b* (the first 20 locations are displayed).	1, B, 2
LIMO *a b* C	Clears event counters for locations between *a* and *b*.	2
LIMO C	Clears event counters for the entire line.	2

LOOP

Use the **LOOP** command to instruct the relay to receive the transmitted MIRRORED BITS communications data on the same serial port when troubleshooting your MIRRORED BITS channel.

If you have enabled multiple MIRRORED BITS communications ports (1, 2, or 3), then you must specify the port parameter for the **LOOP** command. If you have only one of the ports enabled, the relay assumes that port if no port is otherwise specified. If you do not specify a time-out period, loopback mode times out in 5 minutes (see *Loopback Testing on page 3.14* for more information).

Table C.16 LOOP Command

Command[a]	Description	Access Level
LOOP	Enable loopback mode of the active MIRRORED BITS communications channel (available only when a single port is enabled) for 5 minutes; ignore input data and force receive bits (RMB*n*P*m*) to logical 0.	2
LOOP *c*	Enable loopback mode of MIRRORED BITS communications Port *c* for 5 minutes; ignore input data and force receive bits (RMB) to logical 0.	2
LOOP *c t*	Enable loopback mode of MIRRORED BITS communications Port *c* and end loopback mode after *t* minutes; ignore input data and force receive bits (RMB) to logical 0.	2

[a] *c* = 1, 2, or 3; *t* = 1–5000 minutes, with 1-minute resolution.

In the loopback mode, the ROK Relay Word bit deasserts and the relay uses the LBOK Relay Word bit to indicate whether the data transmissions are satisfactory. The relay collects communications statistics as usual.

LOOP DATA

The **LOOP DATA** command tells the relay to pass input MIRRORED BITS communications data through to the receive (RMB) bits (see *Loopback Testing on page 3.14* for more information).

Table C.17 LOOP DATA Command

Command[a]	Description	Access Level
LOOP DATA	Enable loopback mode of the active MIRRORED BITS communications port (available only when a single port is enabled) for 5 minutes; pass input data to receive data.	2
LOOP *c* DATA	Enable loopback mode of MIRRORED BITS communications Port *c* for 5 minutes; pass input data to receive data.	2
LOOP *c* DATA *t*	Enable loopback mode of MIRRORED BITS communications Port *c* for *t* minutes; pass input data to receive data.	2

[a] *c* = 1, 2, or 3; *t* = 1–5000 minutes, with 1-minute resolution.

LOOP R

The **LOOP R** command terminates the loopback mode on MIRRORED BITS communications ports. If you do not specify a port, the relay terminates loopback mode on all ports (see *Loopback Testing on page 3.14* for more information).

Table C.18 LOOP R Command

Command	Description	Access Level
LOOP R	Cease loopback mode on all MIRRORED BITS communications ports. (Reset the ports to normal use.)	2
LOOP *c* R	Cease loopback mode on MIRRORED BITS communications Port *c*. (Reset Port *c* to normal use.)	2

MAC

The **MAC** command displays the Media Access Control (MAC) addresses of transceivers for Ports 5 and 6. For more information, see *MAC Report on page 8.51*.

Table C.19 MAC Command

Command	Description	Access Level
MAC	Display the MAC addresses of the Port 5 and 6 transceivers.	1, B, 2

METER

The **MET** command displays local and remote fundamental frequency voltages, currents, and the power system frequency (see *Verifying Voltage and Current Inputs on page 11.48* for more information).

Table C.20 MET Command

Command	Description	Access Level
MET	Display local and remote phase, phase-to-phase, and sequence quantities metering data.	1, B, 2
MET *n*	Display local and remote phase, phase-to-phase, and sequence quantities metering data *n* times, where *n* = 1–32767.	1, B, 2

PASSWORD

Use the **PAS** command to set password protection for relay access levels.

PAS *level*

Use the **PAS *level*** command to change the password for the specified access level.

⚠WARNING
This device is shipped with default passwords. Default passwords should be changed to private passwords at installation. Failure to change each default password to a private password may allow unauthorized access. SEL shall not be responsible for any damage resulting from unauthorized access.

Table C.21 PAS Command

Command	Description	Access Level
PAS *level* [a]	Set a password for Access Level *level*.	2

[a] Where *level* = 1, B, or 2.

Valid passwords are character sequences of as many as 12 characters. Valid characters are any printable ASCII character. All passwords are case-sensitive.

Password Changes

When you issue the **PAS** command, you will be prompted first to enter the old password, and then twice to enter the new password. You may disable a prompt for the old password by using the PASSWORD jumper (see *Accessing and Configuring Relay Jumpers on page 10.18* for more information).

The following is an example of changing the password for Access Level 1. This example includes the caution message the relay returns when you enter a weak password.

```
==>>PAS 1 <Enter>
Old PW: ? ***** <Enter>
New PW: ? ***** <Enter>
Confirm PW: ? ***** <Enter>

Password Changed
CAUTION: This password can be strengthened.  Strong passwords do not include a
name, date, acronym, or word.  They consist of the maximum allowable
characters, with at least one special character, number, lower-case letter, and
upper-case letter.  A change in password is recommended.

==>>QUIT <Enter>
```

When you enter an incorrect password in response to the `Old PW` prompt, the relay displays `Invalid Password` and pulses Relay Word bit PASNVAL for one second. Entry of three incorrect passwords within one minute causes the relay to pulse Relay Word bits PASNVAL and BADPASS for one second and to display the following message, where x is the password level that you attempted to change:

```
Level x Denied

WARNING: ACCESS BY UNAUTHORIZED PERSONS STRICTLY PROHIBITED

Access Temporarily Denied.
```

You will not be able to make another access level entry attempt for 30 seconds. When you successfully enter a new password, the relay pulses Relay Word bit CHGPASS for one second.

PLAY

Use the **PLA** command to play back test files available in the relay. During event playback, the relay substitutes the voltages and currents from the analog-to-digital converter with the values from the in-memory test file. You have the option to enable the contact and MIRRORED BITS outputs.

Table C.22 PLA Command

Command	Description	Access Level
PLA	Show which test files are available.	1, B, 2
PLA *n*	Play back TESTFILE*n*, where *n* = 1–5.	2
PLA *n hh:mm:ss*	Play back TESTFILE*n* at time *hh:mm:ss*, where *n* = 1–5.	2
PLA *n hh:mm:ss uu*	Play back TESTFILE*n* at time *hh:mm:ss* with a time offset of *uu* microseconds, where *n* = 1–5 and *uu* = 0–99.	2
PLA *n* O	Play back TESTFILE*n* while allowing contact output operation, where *n* = 1–5.	2
PLA *n* MB	Play back TESTFILE*n* while allowing MIRRORED BITS operation, where *n* = 1–5.	2
PLA X	Cancels scheduled playback.	2
PLA C	Clears all test files from the relay memory.	2
PLA *n* O MB	Play back TESTFILE*n* while allowing contact output operation and MIRRORED BITS operation, where *n* = 1–5.	2
PLA *n* O MB *hh:mm:ss uu*	Play back TESTFILE*n* at *hh:mm:ss* with a time offset of *uu* microseconds while allowing contact output and MIRRORED BITS operation, where *n* = 1–5 and *uu* = 0–99.	2

PULSE

Use the **PUL *m*** command to close any of the seven relay contact outputs for a specified time. This function can aid you in relay testing and commissioning.

Table C.23 PUL *m* Command

Command[a]	Description	Access Level
PUL *m*	Pulse output *m* for one second.	B, 2
PUL *m s*	Pulse output *m* for *s* seconds.	B, 2

[a] *m* = TPA1, TPB1, TPC1, TPA2, TPB2, TPC2, or ALARM
s = 1–30 seconds, with 1-second resolution

For example, if you issue the **PUL TPA1** command, Output Contact TPA1 closes for one second, and Relay Word bit PULSE asserts for one second. If you issue the **PUL ALARM** command, the b contact of Output ALARM closes for one second, and Relay Word bits PULSE and ALARM assert for one second.

If the BREAKER jumper is not in place, the relay rejects the command and responds, `Command Aborted: No Breaker Jumper`. (For more information on the password jumper, see *Accessing and Configuring Relay Jumpers on page 10.18*.)

QUIT

Use the **QUIT** command to go to Access Level 0 (exit relay control).

NOTE: Issuing the **QUIT** command does NOT terminate connections for either Telnet or FTP sessions.

Table C.24 QUIT Command

Command	Description	Access Level
QUIT	Go to Access Level 0 (exit relay control).	1, B, 2

R_S

Use the **R_S** command to restore factory-default settings. Clear all other non-volatile data (SER, event reports, and diagnostic reports). Use this command when decommissioning the relay.

If you are returning the relay to SEL for service, do not erase data with this command.

Table C.25 R_S Command

Command	Description	Access Level
R_S	Restore the factory-default settings and passwords, clear all private data, and reboot the system.	2

SER

Use the **SER** commands to view and manage the SER report. You can view the SER records in numerical or chronological order (see *SER Report on page 5.18* for more information).

Table C.26 SER Command (Sheet 1 of 2)

Command	Description	Access Level
SER	Return all records from the SER, with the oldest (highest number) at the top of the list and the most recent (lowest number) at the bottom of the list.	1, B, 2
SER *k*	Return the *k* most recent records from the SER, with the oldest (highest number) at the top of the list and the most recent (lowest number) at the bottom of the list (where *k* = 1–10000).	1, B, 2
SER *m n*	Return the SER records from *m* to *n*. If *m* is greater than *n*, records appear with the oldest (highest number) at the top of the list and the most recent (lowest number) at the bottom of the list. If *m* is less than *n*, records appear with the most recent (lowest number) at the top of the list and the oldest (highest number) at the bottom of the list.	1, B, 2
SER *date1*	Return the SER records from date *date1*.	1, B, 2

Table C.26 SER Command (Sheet 2 of 2)

Command	Description	Access Level
SER *date1 date2*	Return the SER records from *date1* at the top of the list to *date2* at the bottom of the list.	1, B, 2
SER C	Clear SER records.	2
SER D	List chattering SER elements that the relay is removing from the SER records.	1, B, 2

The SER report includes the events shown in *Table C.27* by default. For example, if you turn the power off and then back on, the SER report displays `Relay restarted`.

Table C.27 Factory-Set SER Events

Event	SER Display
Device turning on	`Relay restarted`
Device settings change	`Settings changed`
SER archive cleared	`SER archive cleared`
SER buffer overflow	`SER data loss begin`
SER buffer overflow end	`SER data loss end`
Diagnostic restart of device (see *Appendix F: Diagnostics*)	`Diagnostic restart`
Auto-removed chattering SER element	`Auto-Removed`
Auto-reinstated ceased-chattering SER element	`Auto-Reinstated`
Relay clock is free running	`Time Source: Free Running`
Relay clock locked to local high-quality IRIG source	`Time Source: HIRIG`
Relay clock locked to remote relay free running clock	`Time Source: Remote Free Running`
Relay clock locked to remote high-quality IRIG source	`Time Source: Remote HIRIG`
Relay clock source seamless handover	`Time Source: Source Handover`
Playback of test file n begin	`Playback of TESTFILEn begin`
Playback of test file n end	`Playback of TESTFILEn end`
Playback canceled	`Playback canceled`

The **SER D** command shows a list of SER items that the relay has automatically removed. These are “chattering” elements. Set Enable setting ESERDEL = Y to automatically remove chattering SER elements in the SER Chatter Criteria category of the Report settings.

SET

Use the **SET** command to change relay settings. The SEL-T400L settings structure contains items in the following hierarchy: classes, instances, categories, and individual settings. The following is an outline of the relay settings structure:

Classes (Device/Protection, Port, and Records)

Instances (Ports = 1, 2, 3, F, 5, 6)

Categories (collections of settings within a class)

Settings (individual relay settings with values)

The **SET** commands contain these settings structure items, which you must specify in the proper order from class to instance (if applicable) to setting. Use **SET** to edit Device/Protection settings, use **SET P** to edit communications port settings, use **SET R** to edit recording settings.

Table C.28 SET Command

Command[a]	Description	Access Level
SET	Set the Device/Protection relay settings, beginning at the first setting.	2
SET *label*	Set the Device/Protection relay settings, beginning at setting name *label*.	2
SET P	Set the settings of the active port (from which you issue the command), beginning at the first setting for this port.	2
SET P *label*	Set the settings of the active port (from which you issue the command), beginning at the settings name *label*.	2
SET P *p*	Set the communications Port relay settings for Port *p* (where *p* = F, 1, 2, 3, 5, 6), beginning at the first setting for this port.	2
SET P *p label*	Set the communications Port relay settings for Port *p*, beginning at setting *label*.	2
SET R	Set the Report settings, beginning at the first setting in this class.	2
SET R *label*	Set the Report settings, beginning at setting *label*.	2

[a] *label* = setting name such as CTRW.

The relay validates your settings entries as you enter each setting. At the end of a settings instance session, the relay responds with a readback of all the settings in the settings instance and then prompts, `Save settings (Y,N)?` If you answer **Y <Enter>**, the relay pulses the Relay Word bits SETCHG and SALARM, saves the new settings and responds, `Settings Saved`. If you answer **N <Enter>** to the save settings prompt, the relay responds, `Settings aborted`.

Use the **TERSE** option in the **SET** command to inhibit the relay from sending the settings class or instance readback before prompting to accept new settings. SEL recommends that you use the **TERSE** option sparingly; you should review the readback information to confirm that you have entered the settings that you intended.

Table C.29 TERSE Option Examples

Command	Description	Access Level
SET TERSE	Set Device settings, beginning at the first setting in this instance; omit settings readback.	2
SET *label* TE	Set Device settings, beginning at the setting *label*; omit settings readback.	2
SET P *p label* TE	Set the communications Port relay settings for Port *p*, beginning at the setting *label*; omit settings readback.	2

SET C

Use the **SET C** command to set the main board and analog input board calibration settings. There is only one instance for the calibration settings. Contact your Technical Service Center or the SEL factory before using this command. Inappropriate changes to the calibration settings can render the device inoperative. If the device is inoperative, it must be returned to the SEL factory for recalibration.

Table C.30 SET C Command

Command	Description	Access Level
SET C M	Set the main board calibration settings, beginning at the first setting in this class.	C
SET C A *label*	Set the AI board calibration settings, beginning at the settings name *label*.	C

SHOW

The **SHO** command displays the relay settings and its options are the same as the **SET** command.

Table C.31 SHO Command

Command[a]	Description	Access Level
SHO	Show the Device settings, beginning at the first setting.	1, B, 2
SHO *label*	Show the Device settings, beginning at setting *label*.	1, B, 2
SHO P	Show the relay settings for the port you use when issuing the command, beginning at the first setting.	1, B, 2
SHO P *label*	Show the relay settings for the port you use when issuing the command, beginning at setting *label*.	1, B, 2
SHO P *p*	Show the communications Port relay settings for Port *p*, where (*p* = F, 1, 2, 3, 5, 6), beginning at the first setting for this port.	1, B, 2
SHO P *p label*	Show the communications Port relay settings for Port *p*, beginning at setting *label*.	1, B, 2
SHO R	Show the Report relay settings, beginning at the first setting for this class.	1, B, 2
SHO R *label*	Show the Report relay settings, beginning at setting *label*.	1, B, 2

[a] *label* = setting name such as CTRW.

STATUS

The **STA** command reports relay status information derived from internal diagnostic routines and self-tests. See *Appendix F: Diagnostics* for information on relay diagnostics and the status report.

Table C.32 STA Command

Command	Description	Access Level
STA	Display status report.	1, B, 2
STA C/R	Clear relay status information and restart relay.	2

SUMMARY

The **SUM** command displays an event report summary and transmits a report on Port 5 if AUTO = Y on Port 5.

Use the **SUM** command to view the event report summaries in the relay memory. For more information, see *SUMMARY Report on page 5.10*. The **SUM** command without any parameters displays the most recent event report, if an event report exists.

Table C.33 SUM Command

Command	Description	Access Level
SUM	Return the most recent event summary.	1, B, 2
SUM *n* [a]	Return an event summary for Event Number *n*.	1, B, 2
SUM N	View the oldest unacknowledged event summary.	1, B, 2
SUM A	Acknowledge the oldest unacknowledged event summary after issuing a **SUM N** command.	1, B, 2

[a] Parameter *n* indicates event number; see the event HISTORY report (*HISTORY on page C.8*).

Event reports have absolute numbers between 10000 and 65535. Parameter *n* is the number of a specific event report and has a range of 10000 through 65535 depending on the event records stored in relay memory at a given instant. See *HISTORY on page C.8* for more information.

TARGET

Use the **TAR** command to view a row of Relay Word bit elements. When using the **TAR** command, you can specify the row number or Relay Word bit name (see *Appendix D: Relay Word Bits*).

Table C.34 TAR Command

Command	Description	Access Level
TAR	Display target Row 0 or display the most recently viewed target row.	1, B, 2
TAR *n*	Display target Row *n*.	1, B, 2
TAR *n k* [a]	Display target Row *n* and repeat for *k* times; the repeat count *k* must follow the row number.	1, B, 2
TAR *name*	Display the target row containing element *name*.	1, B, 2
TAR *name k* [a]	Display the target row containing element *name* and repeat for *k* times; the repeat count *k* can be before or after the *name* option.	1, B, 2
TAR LIST	Display all target rows.	1, B, 2
TAR R	Reset latched targets and return memorized row to Row 0.	1, B, 2
TAR ROW LIST	Display all target rows, including the row number.	1, B, 2
TAR ROW *Relay Word bit*	Display the target row, including the row number, where the Relay Word bit is located.	1, B, 2

[a] *k* = 1–32767.

The relay memorizes the latest target row input. The relay displays Row 0 if you have not specified a row since the relay turned on, the access level timed out, a terminal session is closed, or you issued the **QUIT** command.

The **TAR R** command has two functions: to reset any latched relay targets resulting from a tripping event (asserts TRGTR for one processing interval) and to reset the memorized target row that the relay reports when you issue a simple **TAR** command to Row 0.

TEST DB2

The **TEST DB2** command provides a method to override digital and analog DNP inputs for testing DNP3 functionality. The command overrides values in the DNP3 communications interface only. The actual values that the relay uses for protection and control are not changed. However, remote devices may use these analog and digital inputs to make control decisions. Ensure that remote DNP3 clients are properly configured to receive the overridden DNP inputs before using the **TEST DB2** command in the relay.

When the **TEST DB2** command forces the DNP inputs to test values, the Relay Word bit TESTDB2 remains asserted to indicate that the DNP3 test mode is active. Issue the **TEST DB2** command to see the present status of all analog and digital values that are currently being overridden.

Use the **TEST DB2 OFF** command to end the testing session and remove the override values. The relay returns the registers to the current values.

Table C.35 TEST DB2 Command

Command	Description	Access Level
TEST DB2	Display current digital and analog override names and values.	B, 2
TEST DB2 D *name*[a] *value*[b]	Write the specified override *value* into the digital input *name*.	B, 2
TEST DB2 A *name*[c] *value*[d]	Write the specified override *value* into the analog input *name*.	B, 2
TEST DB2 OFF	Clear all digital and analog override test values.	B, 2
TEST DB2 D *name*[a] OFF	Terminate test mode for the digital value specified, and return the variable to the current value.	B, 2
TEST DB2 A *name*[c] OFF	Terminate test mode for the analog value specified, and return the variable to the current value.	B, 2

[a] Digital *name* can be selected from the Binary Inputs (except UNRDEV and NUNREV) in *Table I.5 on page I.5*.
[b] The override *value* for digital and status elements can be logical 0 or logical 1.
[c] The analog *name* can be selected from the Analog Inputs (excluding the Event Summary Analog Inputs) in *Table I.5 on page I.5*.
[d] The override *value* for analog quantities can be an integer or a floating-point number.

TIME

The **TIM** command returns information about the internal relay clock. You can also set the clock (from Access Level 2) by specifying hours and minutes (and optionally, seconds). Separate the hours, minutes, and seconds with colons, semicolons, spaces, commas, or slashes.

Use the **TIM** command to view and set the relay internal clock time. The relay works with Coordinated Universal Time (UTC) only, and only IRIG-B version C37.118. The C37.118 version includes UTC offset information that the relay uses to display UTC. If you use the **TIM** command to set the clock in the relay, the relay processes this time as UTC. The **TIM Q** command displays the time you set as UTC and shows the UTC offset as zero.

If a valid IRIG-B time signal is connected to the relay (or connected to the remote relay and the direct point-to-point fiber-optic channel is installed), the **TIM** command cannot be used to set the relay time. In this case, the relay does not update the time (i.e., it rejects the **TIM** command set request) and instead displays the current relay time.

Table C.36 TIM Command

Command	Description	Access Level
TIM	Display the present relay internal clock time.	1, B, 2
TIM *hh:mm*	Set the relay internal clock to *hh:mm*.	1, B, 2
TIM *hh:mm:ss*	Set the relay internal clock to *hh:mm:ss*.	1, B, 2
TIM Q	Display detailed information about the internal relay clock; query relay time.	1, B, 2

The value *hh* is for hours from 0–23; the value *mm* is for minutes from 0–59; the value *ss* is for seconds from 0–59. If you enter a valid time, the relay updates and saves the time in the nonvolatile clock and displays the entered time. If you enter an invalid time, the relay responds, `Invalid Time`.

The **TIM Q** command returns detailed information on the relay internal clock. Use this command to query the status of high-accuracy time source inputs and the present clock time mode. See *Appendix H: High-Accuracy Timekeeping* for more information about relay time.

TRIGGER

The **TRI** command initiates data captures for high-resolution (TDR) and ultra-high-resolution (MHR) oscillography records (see *Section 5: Fault and Event Recording* for more information).

Table C.37 TRI Command

Command	Description	Access Level
TRI	Trigger relay data capture.	1, B, 2

When you issue the **TRI** command, the relay asserts Relay Word bit TRIG for one processing interval and responds, `Triggered`. The relay does not trigger an event if the relay is disabled, another event is in progress, or when the event buffer is full. For any of these conditions, the relay responds, `Did not trigger`.

TWTEST

Use the **TWT** command to simplify testing of TW-based protection elements and schemes. This command requires front-panel acknowledgment. When you acknowledge the **TWT** command, the relay asserts the TWTEST Relay Word bit. The TWTEST bit overrides supervision of the TW-based protection elements and schemes with incremental quantities and phasors. The TW-based protection elements and schemes therefore respond directly to TWs and you can use TW injection to test them, without any need to inject signals in the lower frequency spectrum. See *Section 11: Testing and Commissioning* for more information. When the TWTEST bit is asserted, the **ARMED** target LED flashes to provide a visual indication that the relay is operating in the TW test mode.

Enable the TW test mode by issuing the **TWT** command. The relay confirms the command by displaying `Traveling-wave test mode in progress`. The TW test mode expires in 30 minutes, but you can extend a TW test by issuing the **TWT**

command again to restart the time-out period. When the TW test mode expires, the relay deasserts the TWTEST bit. Issue the **TWT C** or **TWT X** command to cancel the TW test mode at any time. The relay responds with `Traveling-wave test mode cancelled` and deasserts the TWTEST bit. Always cancel the TW test mode before putting the relay in service.

The **TWT** command temporarily alters how the relay operates and therefore it is only accessible at Access Level 2.

Table C.38 TWT Command

Command	Description	Access Level
TWT	Initiate the TW test mode or restart the TW test mode time-out.	2
TWT C or **TWT X**	Cancel the TW test mode.	2

VECTOR

Issue the **VEC** command only under the direction of SEL. The information contained in a vector report is formatted for SEL in-house use only. Your SEL application engineer or the factory may request a **VEC** command capture to help diagnose a relay or system problem.

Table C.39 VEC Command

Command	Description	Access Level
VEC	Displays exception records only.	2
VEC D	Displays diagnostic records only.	2
VEC D *n*	Displays *n* diagnostic records only.	2
VEC E	Displays exception records only.	2
VEC E *n*	Displays *n* exception records only.	2
VEC C/R	Clears all diagnostics and exception vector records.	2

VERSION

The **VER** command displays the relay hardware and firmware configuration. Use the **VER** command to list the part number, serial number, checksums, firmware release numbers, and other important relay configuration information (see *Checking Relay Status and Installed Hardware and Firmware on page 10.22* for more information).

Table C.40 VER Command

Command	Description	Access Level
VER	Display the hardware and firmware configurations.	1, B, 2

Commands for Machine Clients

BNAMES

The **BNA** command displays ASCII names of all relay status bits for Fast Meter protocol in Compressed ASCII format. See *SEL Compressed ASCII Commands on page 9.9* and *SEL Fast Meter and SEL Fast SER Protocols on page 9.15* for more information.

Table C.41 BNA Command

Command	Description	Access Level
BNA	Display ASCII names of all relay status bits.	0, 1, B, 2

CASCII

The **CAS** command displays the Compressed ASCII configuration message. This configuration instructs a machine client about the method for extracting data from other Compressed ASCII commands. See *CASCII Configuration Message for Compressed SEL ASCII Commands at Access Level 0 on page 9.10* for more information.

Table C.42 CAS Command

Command	Description	Access Level
CAS	Return the Compressed ASCII configuration message.	0, 1, B, 2

CHISTORY

The **CHI** command is the **HISTORY** command for the Compressed ASCII command set. The relay outputs a Compressed ASCII history report for SCADA and other automation applications. Issue the **CHI** command to view the Compressed ASCII history report. See *CHISTORY Report on page 9.12* for more information.

Table C.43 CHI Command

Command	Description	Access Level
CHI	Return the data as contained in the history report for all event reports in Compressed ASCII format.	1, B, 2
CHI *n*	Return the data as contained in the history report for the *n* most recent event reports in Compressed ASCII format.	1, B, 2

CSTATUS

The **CST** command is the **STATUS** command for the Compressed ASCII command set. See *CSTATUS Report on page 9.13* for more information.

Table C.44 CST Command

Command	Description	Access Level
CST	Return the relay status in Compressed ASCII.	1, B, 2

DNAME

The **DNA** command displays the ASCII names of all relay digital I/O quantities reported in a Fast Meter message in Compressed ASCII format. See *SEL Compressed ASCII Commands on page 9.9* and *SEL Fast Meter and SEL Fast SER Protocols on page 9.15* for more information.

Table C.45 DNA Command

Command	Description	Access Level
DNA	Display ASCII names of all relay digital I/O.	0, 1, B, 2
DNA X	Same as DNA—display ASCII names of all relay digital I/O.	0, 1, B, 2
DNA T	Display ASCII names of the entire set of elements if the elements reported in the Fast Meter response do not compose the full set provided by the device.	0, 1, B, 2

ID

Use the **ID** command to obtain relay identification information. See *CASCII Configuration Message for Compressed SEL ASCII Commands at Access Level 0 on page 9.10* for more information.

Table C.46 ID Command

Command	Description	Access Level
ID	Display a list of relay identification codes.	0, 1, B, 2

SNS

In response to the **SNS** command, the relay sends the names of the SER elements. This is a comma-delimited string used to support the SEL Fast SER report. See *Section 9: SCADA and HMI Protocols*, *SEL Compressed ASCII Commands on page 9.9*, and *SEL Fast Meter and SEL Fast SER Protocols on page 9.15* for more information.

Table C.47 SNS Command

Command	Description	Access Level
SNS	Send the names of SER elements.	0, 1, B, 2

APPENDIX D

Relay Word Bits

Use this appendix as a reference for Relay Word bit labels in this manual, a resource for those relay settings that are Relay Word bits or lists of Relay Word bits, and as a resource for programming the SEL Fast SER protocol. *Table D.1* lists the Relay Word bits in alphabetic order.

Table D.1 Relay Word Bits (Sheet 1 of 7)

Name	Description	Row
3PO	Three-pole open condition	9
3PS	Three phases selected for tripping	33
3PT	Three-phase trip command sent to the output contacts	32
87OK_G	**TW87OK** target LED is green	2
87OK_R	**TW87OK** target LED is red	2
87RXOK	Relay receives data over Port 6	35
87SYN	Relay sampling clock is synchronized over the TW87 channel on Port 6	35
ABARM	AB protection measurement loop armed	11
ABFLT	AB protection measurement loop released	10
ACCESS	Asserts when a user is logged in at Access Level B or higher	8
ACCESSP	Pulses for one second when any user increases their access level to 2 or higher	8
AGARM	AG protection measurement loop armed	11
AGFLT	AG protection measurement loop released	10
ALARM	OR combination of HALARM and SALARM	21
ALPARM	All protection measurement loops armed	11
APO	Any pole open	9
APS	A-phase selected for tripping	33
ARC	Autoreclose cancel asserted	34
ARMED_G	**ARMED** target LED is green	2
ARMED_R	**ARMED** target LED is red	2
ARMED_Y	**ARMED** target LED is yellow	2
BADPASS	Pulses for approximately one second after entry of three successive bad passwords	8
BCARM	BC protection measurement loop armed	11
BCFLT	BC protection measurement loop released	10
BGARM	BG protection measurement loop armed	11
BGFLT	BG protection measurement loop released	10
BLK	BLK contact input asserted	20
BNC_OK	High-accuracy IRIG-B signal from BNC port is available	4
BPS	B-phase selected for tripping	33
CAARM	CA protection measurement loop armed	11

Table D.1 Relay Word Bits (Sheet 2 of 7)

Name	Description	Row
CAFLT	CA protection measurement loop released	10
CGARM	CG protection measurement loop armed	11
CGFLT	CG protection measurement loop released	10
CHGPASS	Pulses for one second whenever a password changes	8
COMMLED	**COMM** target LED is illuminated	2
COMPRM	Communications-assisted trip	32
CPS	C-phase selected for tripping	33
DINVL	Invalid local voltage or current data	7
DINVLS	Invalid or clipped local voltage or current data	7
DINVR[a]	Invalid remote voltage or current data	7
DINVRS[a]	Invalid or clipped remote voltage or current data	7
DST	Daylight-saving time active	5
DSTP	Daylight-saving time change pending	5
DT87LA	Direct transfer trip received from TW87 channel; Phase A	29
DT87LB	Direct transfer trip received from TW87 channel; Phase B	29
DT87LC	Direct transfer trip received from TW87 channel; Phase C	29
DTRXA	Supervised direct transfer trip received; Phase A	30
DTRXB	Supervised direct transfer trip received; Phase B	30
DTRXC	Supervised direct transfer trip received; Phase C	30
DTTXA	Transmit direct transfer trip; Phase A	30
DTTXB	Transmit direct transfer trip; Phase B	30
DTTXC	Transmit direct transfer trip; Phase C	30
E3PT	Enable three-phase trip asserted	32
EN	**ENABLED** target LED is illuminated	0
ENR	Remote relay enabled	6
ER	Event report trigger condition	6
EVNTPKP	Event with potential to cause SEL-T400L protection operation detected	34
FL	Fault location trigger condition	6
FREQOK	Frequency measurement is locked and accurate	9
FS3P	Three-phase fault	12
FSAB	AB fault	12
FSAG	AG fault	12
FSAGBG	Evolving external/internal AG and BG fault	13
FSBC	BC fault	12
FSBG	BG fault	12
FSBGCG	Evolving external/internal BG and CG fault	13
FSCA	CA fault	12
FSCG	CG fault	12
FSCGAG	Evolving external/internal CG and AG fault	13
GROUND	**GROUND** target LED is illuminated	1
HALARM	OR combination of HALARMP and HALARML	7

Table D.1 Relay Word Bits (Sheet 3 of 7)

Name	Description	Row
HALARML	Latches for any relay failures	7
HALARMP	Pulses for five seconds when a warning condition occurs	7
ILREMI[a]	EMI activity detected in local or remote currents	34
IN101	Input IN101 asserted	20
IN102	Input IN102 asserted	20
IN103	Input IN103 asserted	20
IN104	Input IN104 asserted	20
KEYA	Transmit permissive trip signal; Phase A	31
KEYB	Transmit permissive trip signal; Phase B	31
KEYC	Transmit permissive trip signal; Phase C	31
KEYTW	Transmit permissive trip signal; TW32	31
LBOKP1	Port 1 MIRRORED BITS loopback data OK	28
LBOKP2	Port 2 MIRRORED BITS loopback data OK	28
LBOKP3	Port 3 MIRRORED BITS loopback data OK	28
LINK5	Port 5 valid link detected	6
LINK6	Port 6 valid link detected	6
LMEVE	Line monitoring new event detected[b]	35
LMA	Line monitoring alarm	35
LMAB1	Line monitoring Blocking Region 1 alarm	35
LMAB2	Line monitoring Blocking Region 2 alarm	35
LOP	Loss-of-potential condition	9
LOPLED	LOP target LED is illuminated	2
LPSEC	Leap second direction; add one second if deasserted, delete if asserted	5
LPSECP	Leap second pending	5
MBOK1_G	MBOK1 target LED is green	3
MBOK1_R	MBOK1 target LED is red	3
MBOK2_G	MBOK2 target LED is green	3
MBOK2_R	MBOK2 target LED is red	3
MBOK3_G	MBOK3 target LED is green	3
MBOK3_R	MBOK3 target LED is red	3
OC21AB	Overcurrent supervision asserted for TD21; AB loop	16
OC21AG	Overcurrent supervision asserted for TD21; AG loop	16
OC21BC	Overcurrent supervision asserted for TD21; BC loop	16
OC21BG	Overcurrent supervision asserted for TD21; BG loop	16
OC21CA	Overcurrent supervision asserted for TD21; CA loop	16
OC21CG	Overcurrent supervision asserted for TD21; CG loop	16
OC87AB	Overcurrent supervision asserted for TW87; AB loop	17
OC87AG	Overcurrent supervision asserted for TW87; AG loop	17
OC87BC	Overcurrent supervision asserted for TW87; BC loop	17
OC87BG	Overcurrent supervision asserted for TW87; BG loop	17
OC87CA	Overcurrent supervision asserted for TW87; CA loop	17

Table D.1 Relay Word Bits (Sheet 4 of 7)

Name	Description	Row
OC87CG	Overcurrent supervision asserted for TW87; CG loop	17
OCTPA	Overcurrent supervision asserted for POTT; Phase A	19
OCTPAB	Overcurrent supervision asserted for POTT; AB loop	18
OCTPAG	Overcurrent supervision asserted for POTT; AG loop	18
OCTPB	Overcurrent supervision asserted for POTT; Phase B	19
OCTPBC	Overcurrent supervision asserted for POTT; BC loop	18
OCTPBG	Overcurrent supervision asserted for POTT; BG loop	18
OCTPC	Overcurrent supervision asserted for POTT; Phase C	19
OCTPCA	Overcurrent supervision asserted for POTT; CA loop	18
OCTPCG	Overcurrent supervision asserted for POTT; CG loop	18
ONE	Logical 1 (Boolean 1 or TRUE)	39
OPA	Pole A open	9
OPB	Pole B open	9
OPC	Pole C open	9
PASNVAL	Pulses for one second when an incorrect password is entered when attempting to enter Access Level B or higher, or when changing passwords	8
PHASE_A	**PHASE A** target LED is illuminated	1
PHASE_B	**PHASE B** target LED is illuminated	1
PHASE_C	**PHASE C** target LED is illuminated	1
PLAY	Event playback in progress	39
PLAYP	Event playback pending	39
PLAYR	Event playback in progress at remote terminal	39
PT87LA	Permissive trip received from TW87 channel; Phase A	29
PT87LB	Permissive trip received from TW87 channel; Phase B	29
PT87LC	Permissive trip received from TW87 channel; Phase C	29
PT87LTW	Permissive trip received from TW87 channel; TW32	29
PTRXA	Supervised permissive trip received; Phase A	30
PTRXB	Supervised permissive trip received; Phase B	30
PTRXC	Supervised permissive trip received; Phase C	31
PULSE	Asserts when you use the **PULSE** command to test relay outputs	6
RMB1P1	Port 1 received MIRRORED BIT 1	23
RMB1P2	Port 2 received MIRRORED BIT 1	25
RMB1P3	Port 3 received MIRRORED BIT 1	27
RMB2P1	Port 1 received MIRRORED BIT 2	23
RMB2P2	Port 2 received MIRRORED BIT 2	25
RMB2P3	Port 3 received MIRRORED BIT 2	27
RMB3P1	Port 1 received MIRRORED BIT 3	23
RMB3P2	Port 2 received MIRRORED BIT 3	25
RMB3P3	Port 3 received MIRRORED BIT 3	27
RMB4P1	Port 1 received MIRRORED BIT 4	23
RMB4P2	Port 2 received MIRRORED BIT 4	25

Table D.1 Relay Word Bits (Sheet 5 of 7)

Name	Description	Row
RMB4P3	Port 3 received MIRRORED BIT 4	27
RMB5P1	Port 1 received MIRRORED BIT 5	23
RMB5P2	Port 2 received MIRRORED BIT 5	25
RMB5P3	Port 3 received MIRRORED BIT 5	27
RMB6P1	Port 1 received MIRRORED BIT 6	23
RMB6P2	Port 2 received MIRRORED BIT 6	25
RMB6P3	Port 3 received MIRRORED BIT 6	27
RMB7P1	Port 1 received MIRRORED BIT 7	23
RMB7P2	Port 2 received MIRRORED BIT 7	25
RMB7P3	Port 3 received MIRRORED BIT 7	27
RMB8P1	Port 1 received MIRRORED BIT 8	23
RMB8P2	Port 2 received MIRRORED BIT 8	25
RMB8P3	Port 3 received MIRRORED BIT 8	27
ROKP1	MIRRORED BITS Port 1 operating correctly	28
ROKP2	MIRRORED BITS Port 2 operating correctly	28
ROKP3	MIRRORED BITS Port 3 operating correctly	28
RXPRM	Supervised POTT trip permission	32
SALARM	OR combination of TWTEST, PLAY, PLAYP, BADPASS, and SETCHG	8
SETCHG	Pulses for one second whenever settings are changed	8
SPT	Single-phase trip command sent to the output contacts	32
START	Starting logic asserted	10
TD21AB	TD21 distance AB loop operated	14
TD21AG	TD21 distance AG loop operated	14
TD21BC	TD21 distance BC loop operated	14
TD21BG	TD21 distance BG loop operated	14
TD21CA	TD21 distance CA loop operated	14
TD21CG	TD21 distance CG loop operated	14
TD21G	TD21 ground distance operated	14
TD21LED	TD21 target LED is illuminated	1
TD21P	TD21 phase distance operated	14
TD32F	TD32 directional element asserted forward	15
TD32FA	Phase A forward TD32 directional element asserted	15
TD32FB	Phase B forward TD32 directional element asserted	15
TD32FC	Phase C forward TD32 directional element asserted	15
TD32LED	TD32 target LED is illuminated	1
TD32R	TD32 directional element asserted reverse	15
TD32RA	Phase A reverse TD32 directional element asserted	15
TD32RB	Phase B reverse TD32 directional element asserted	15
TD32RC	Phase C reverse TD32 directional element asserted	15
TD50DH	Sensitive current disturbance detector asserted	10
TDOUT	Time-out following a protection start	11

Table D.1 Relay Word Bits (Sheet 6 of 7)

Name	Description	Row
TDRBA	Current reversal guard asserted; Phase A	31
TDRBB	Current reversal guard asserted; Phase B	31
TDRBC	Current reversal guard asserted; Phase C	31
TESTDB2	DNP test mode active	39
TIRIG	Relay receives a valid IRIG-B signal	4
TMB1P1	Port 1 transmitted MIRRORED BIT 1	22
TMB1P2	Port 2 transmitted MIRRORED BIT 1	24
TMB1P3	Port 3 transmitted MIRRORED BIT 1	26
TMB2P1	Port 1 transmitted MIRRORED BIT 2	22
TMB2P2	Port 2 transmitted MIRRORED BIT 2	24
TMB2P3	Port 3 transmitted MIRRORED BIT 2	26
TMB3P1	Port 1 transmitted MIRRORED BIT 3	22
TMB3P2	Port 2 transmitted MIRRORED BIT 3	24
TMB3P3	Port 3 transmitted MIRRORED BIT 3	26
TMB4P1	Port 1 transmitted MIRRORED BIT 4	22
TMB4P2	Port 2 transmitted MIRRORED BIT 4	24
TMB4P3	Port 3 transmitted MIRRORED BIT 4	26
TMB5P1	Port 1 transmitted MIRRORED BIT 5	22
TMB5P2	Port 2 transmitted MIRRORED BIT 5	24
TMB5P3	Port 3 transmitted MIRRORED BIT 5	26
TMB6P1	Port 1 transmitted MIRRORED BIT 6	22
TMB6P2	Port 2 transmitted MIRRORED BIT 6	24
TMB6P3	Port 3 transmitted MIRRORED BIT 6	26
TMB7P1	Port 1 transmitted MIRRORED BIT 7	22
TMB7P2	Port 2 transmitted MIRRORED BIT 7	24
TMB7P3	Port 3 transmitted MIRRORED BIT 7	26
TMB8P1	Port 1 transmitted MIRRORED BIT 8	22
TMB8P2	Port 2 transmitted MIRRORED BIT 8	24
TMB8P3	Port 3 transmitted MIRRORED BIT 8	26
TOP	Open-pole after single-pole trip; trip three-pole for the second fault	32
TPA	Phase A trip	33
TPA1	Close TPA1 output	21
TPA2	Close TPA2 output	21
TPB	Phase B trip	33
TPB1	Close TPB1 output	21
TPB2	Close TPB2 output	21
TPC	Phase C trip	33
TPC1	Close TPC1 output	21
TPC2	Close TPC2 output	21
TQUAL1	IRIG time quality Bit 1	5
TQUAL2	IRIG time quality Bit 2	5

Table D.1 Relay Word Bits (Sheet 7 of 7)

Name	Description	Row
TQUAL3	IRIG time quality Bit 3	5
TQUAL4	IRIG time quality Bit 4	5
TR	Unconditional trip condition asserted	32
TRGTR	**TARGET RESET** pushbutton pressed or command issued	6
TRIP	Trip command sent to the output contacts	33
TRIPLED	**TRIP** target LED is illuminated	0
TRPRM	Trip permission	32
TSOK	Relay clock is synchronized with high accuracy to the absolute time	4
TSOK_G	**TSOK** target LED is green	3
TW32F	TW32 directional element asserted forward	37
TW32FA	TW32 directional element asserted forward, A-phase involved	37
TW32FB	TW32 directional element asserted forward, B-phase involved	37
TW32FC	TW32 directional element asserted forward, C-phase involved	37
TW32LED	**TW32** target LED is illuminated	1
TW32R	TW32 directional element asserted reverse	37
TW87	TW87 scheme operated	36
TW87A	TW87 scheme operated to trip A-phase	36
TW87B	TW87 scheme operated to trip B-phase	36
TW87C	TW87 scheme operated to trip C-phase	36
TW87LED	**TW87** target LED is illuminated	1
TW87OK	Relay receives time-synchronized data over Port 6	35
TW87PKP	TW87 scheme picked up	36
TWDD	Traveling-wave disturbance detector asserted	38
TWDDR[a]	Remote traveling-wave disturbance detector asserted	38
TWIDD	Traveling-wave current disturbance detector asserted	38
TWIDDR[a]	Remote traveling-wave current disturbance detector asserted	38
TWTEST	The TW test mode is enabled	39
TWVDD	Traveling-wave voltage disturbance detector asserted	38
TWVDDR[a]	Remote traveling-wave voltage disturbance detector asserted	38
VILEMI	EMI activity detected in local voltages or currents	34

[a] Remote digitals are based on remote analog data and their assertion times are inherently delayed by an amount equal to the direct point-to-point fiber-optic channel delay. However, remote analogs contained in the MHR and TDR records are aligned with the local analogs (i.e., aligned to the event record time) for ease of analysis. Take these details into consideration when comparing remote analog and remote digital time stamps from the MHR and TDR records.

[b] 20 ms pulse.

This page intentionally left blank

APPENDIX E

Analog Quantities

Introduction

The SEL-T400L Relay acquires, calculates, records, and makes available to the user a wide range of analog quantities. These quantities range from 1 MHz voltage and current samples to fault location and other event-related data. The relay uses means appropriate for each type of data to store these different analog data and to make them available to human operators and machine clients. This appendix itemizes the analog quantities of the SEL-T400L as follows:

- *Ultra-High-Resolution Fault Record on page E.1* lists the contents of the 1 MHz record (MHR), including full-scale voltages and currents the relay measures as well as voltage and current traveling waves you can calculate offline through use of SEL-5601-2 SYNCHROWAVE Event Software.
- *High-Resolution Fault Record on page E.3* lists the contents of the 10 kHz record (TDR), including voltages and currents, as well as the incremental-quantity voltages and replica currents the relay derives and which you can use to analyze and troubleshoot relay operation.
- *Metering Quantities on page E.4* lists the relay metering quantities available on the relay front-panel HMI, in the ACSELERATOR QuickSet SEL-5030 Software virtual HMI, via the DNP3 LAN/WAN protocol, and via the SEL ASCII **METER** command.
- *Analog Quantities Available Via SEL Fast Meter Protocol on page E.5* lists data available via the SEL Fast Meter protocol for SCADA and HMI applications.
- *Analog Quantities Related to Events on page E.6* lists event-related quantities such as prefault and fault voltages and currents, fault location, etc., as well as miscellaneous quantities that aid in analysis of relay operation.

Ultra-High-Resolution Fault Record

Table E.1 lists the analog quantities available in the MHR record of the SEL-T400L. These signals are voltages and currents sampled at 1 MHz. Use the MHR record to analyze power system events, analyze and troubleshoot traveling-wave-based protection elements and schemes, perform offline traveling-wave-based fault locating, and to validate or troubleshoot SEL-T400L fault location results. The MHR record is available in IEEE C37.111-2013 COMTRADE binary format.

The MHR record includes the W and X input currents as separate channels. If the direct point-to-point fiber-optic channel is connected and operational on Port 6, the MHR record also includes remote voltages and currents. Only the remote line

current is available as per the remote relay LINEI setting. Use the MHR record from the remote relay to view and analyze the remote W and X currents individually.

Table E.1 also lists the local line current derived by combining the W and X currents following your LINEI setting, and traveling-wave signals derived from the raw currents and voltages. These signals are available as calculated values in SYNCHROWAVE Event (see *Appendix G: Signal Processing* for more information on traveling waves). Use these traveling-wave signals to analyze, test, and troubleshoot the TW32 directional element and the TW87 protection scheme, as well as the traveling-wave-based fault-locating function. The MHR record does not contain any binary channels.

Section 5: Fault and Event Recording provides more information on how to configure SEL-T400L recording functions and analyze records.

The header file (.HDR) of the SEL-T400L MHR record contains relay settings and event-related analog quantities helpful in analyzing power system events and relay operation, such as prefault and fault voltages and currents, fault type and location, etc. See *Analog Quantities Related to Events on page E.6* for the complete lists of analog quantities included in the header files.

Table E.1 Current and Voltage Signals in the MHR Report (Sheet 1 of 2)

Label[a]	Description	Units[b]
Available in the MHR Record		
IφW	Channel W current TW, Phase φ	A
IφX	Channel X current TW, Phase φ	A
Vφ	Line voltage TW, Phase φ	kV
IφR	Remote[c] line current TW, Phase φ	A
VφR	Remote line voltage TW, Phase φ	kV
Calculated in SYNCHROWAVE Event		
Iφ	Line current, Phase φ	A
TWIφW	Channel W current TW, Phase φ	A
TWIφX	Channel X current TW, Phase φ	A
TWVφ	Line voltage TW, Phase φ	kV
TWIφR	Remote line current TW, Phase φ	A
TWVφR	Remote line voltage TW, Phase φ	kV
TWI0.zero	Line current TW, ground mode	A
TWIφ.alpha	Line current TW, alpha mode suitable for Phase φ events	A
TWIφφ.beta	Line current TW, beta mode suitable for Phase φφ events	A
TWV0.zero	Line voltage TW, ground mode	kV
TWVφ.alpha	Line voltage TW, alpha mode suitable for Phase φ events	kV
TWVφφ.beta	Line voltage TW, beta mode suitable for Phase φφ events	kV
TWI0R.zero	Remote line current TW, ground mode	A
TWIφR.alpha	Remote line current TW, alpha mode suitable for Phase φ events	A
TWIφφR.beta	Remote line current TW, beta mode suitable for Phase φφ events	A
TWV0R.zero	Remote line voltage TW, ground mode	kV

Table E.1 Current and Voltage Signals in the MHR Report (Sheet 2 of 2)

Label[a]	Description	Units[b]
TWVφR.alpha	Remote line voltage TW, alpha mode suitable for Phase φ events	kV
TWVφφR.beta	Remote line voltage TW, beta mode suitable for Phase φφ events	kV

[a] φ = A, B, or C.
[b] Primary kV and A.
[c] Remote signals included only if the Port 6 direct point-to-point fiber-optic channel is available.

High-Resolution Fault Record

Table E.2 lists the analog quantities available in the TDR record of the SEL-T400L. These signals are voltages and currents downsampled from the native SEL-T400L sampling rate of 1 MHz to the rate of 10 kHz that the relay uses for incremental-quantity-based protection. Use the TDR record to analyze power system events and to analyze and troubleshoot incremental-quantity-based protection elements and schemes. The TDR record is available in IEEE C37.111-2013 COMTRADE binary format.

The TDR record includes the W and X input currents as separate channels, as well as the line current as per the relay LINEI setting. If the direct point-to-point fiber-optic channel is connected and operational on Port 6, the TDR record also includes remote voltages and currents. Only the remote line current is available, as per the remote relay LINEI setting. Use the TDR record from the remote relay to view and analyze the remote W and X currents individually.

The TDR record includes the phase- and zero-sequence incremental replica currents and incremental phase voltages. Use these signals to obtain the loop incremental replica currents and voltages, as explained in *Appendix G: Signal Processing*, to analyze and troubleshoot operation of incremental-quantity protection elements and schemes. The TDR record also contains the measured power system frequency. Use the frequency signal to calculate or verify incremental voltages and currents from raw voltages and currents (see *Appendix G: Signal Processing* for more information).

The TDR record contains all Relay Word bits of the SEL-T400L as digital channels (see *Appendix D: Relay Word Bits* for the full list).

Section 5: Fault and Event Recording provides more information on how to configure SEL-T400L recording functions and analyze records.

The header file (.HDR) of the SEL-T400L TDR record contains relay settings and event-related analog quantities helpful in analyzing power system events and relay operation, such as prefault and fault voltages and currents, fault type and location, etc. See *Analog Quantities Related to Events on page E.6* for the complete lists of analog quantities included in the header files.

Table E.2 Current and Voltage Signals Available in the TDR Report (Sheet 1 of 2)

Label[a]	Description	Units[b]
IφW	Channel W current, Phase φ	A
IφX	Channel X current, Phase φ	A
Iφ	Line current, Phase φ	A

Table E.2 Current and Voltage Signals Available in the TDR Report (Sheet 2 of 2)

Label[a]	Description	Units[b]
Vφ	Line voltage, Phase φ	kV
DIZφ	Incremental replica current, Phase φ	A
DIZ0	Incremental replica current, zero-sequence	A
DVφ	Incremental voltage, Phase φ	kV
IφR	Remote[c] line current, Phase φ	A
VφR	Remote line voltage, Phase φ	kV
FREQ	System frequency	Hz

[a] φ = A, B, or C.
[b] Primary kV and A.
[c] Remote signals included only if the Port 6 direct point-to-point fiber-optic channel is available.

Metering Quantities

Table E.3 lists SEL-T400L metered values available on the relay front-panel HMI, and via the DNP3 LAN/WAN protocol and SEL ASCII **METER** command. These voltages and currents are frequency-compensated phasors scaled to root-mean-square (rms) and referenced to the positive-sequence voltage angle (see *Appendix G: Signal Processing* for more information on frequency and phasor measurement). If the direct point-to-point fiber-optic channel is connected and operational on Port 6, the metered values include remote voltages and currents. Only the remote line current (and not the individual W and X currents) is available, per the remote relay LINEI setting.

Table E.3 Metering Values Available on Front-Panel HMI, QuickSet HMI, and Via SEL ASCII MET Command (Sheet 1 of 2)

Label[a]	DNP3 Label[b]	Description[c]	Units[d]
Iφ MAG	Iφ	Line current, magnitude, Phase φ	A
Iφ ANG	IφFA	Line current, angle, Phase φ	Degrees
IφW MAG	IφW	Channel W current, magnitude, Phase φ	A
IφW ANG	IφWFA	Channel W current, angle, Phase φ	Degrees
IφX MAG	IφX	Channel X current, magnitude, Phase φ	A
IφX ANG	IφXFA	Channel X current, angle, Phase φ	Degrees
I1 MAG	I1	Line current, positive-sequence, magnitude	A
I1 ANG	I1FA	Line current, positive-sequence, angle	Degrees
3I2 MAG	3I2	Line current, negative-sequence, magnitude	A
3I2 ANG	3I2FA	Line current, negative-sequence, angle	Degrees
3I0 MAG	3I0	Line current, zero-sequence, magnitude	A
3I0 ANG	3I0FA	Line current, zero-sequence, angle	Degrees
Vφ MAG	Vφ	Line voltage, magnitude, Phase φ	kV
Vφ ANG	VφFA	Line voltage, angle, Phase φ	Degrees
Vφφ MAG	Vφφ	Line phase-phase voltage, magnitude, Phase φφ	kV
Vφφ ANG	VφφFA	Line phase-phase voltage, angle, Phase φφ	Degrees

Table E.3 Metering Values Available on Front-Panel HMI, QuickSet HMI, and Via SEL ASCII MET Command (Sheet 2 of 2)

Label[a]	DNP3 Label[b]	Description[c]	Units[d]
V1 MAG	V1	Line positive-sequence voltage, magnitude	kV
V1 ANG	V1FA	Line positive-sequence voltage, angle	Degrees
3V2 MAG	3V2	Line negative-sequence voltage, magnitude	kV
3V2 ANG	3V2FA	Line negative-sequence voltage, angle	Degrees
3V0 MAG	3V0	Line zero-sequence voltage, magnitude	kV
3V0 ANG	3V0FA	Line zero-sequence voltage, angle	Degrees
IφR MAG	IφR	Remote[e] line current, magnitude, Phase φ	A
IφR ANG	IφRFA	Remote line current, angle, Phase φ	Degrees
I1R MAG	I1R	Remote line positive-sequence current, magnitude	A
I1R ANG	I1RFA	Remote line positive-sequence current, angle	Degrees
3I2R MAG	3I2R	Remote line negative-sequence current, magnitude	A
3I2R ANG	3I2RFA	Remote line negative-sequence current, angle	Degrees
3I0R MAG	3I0R	Remote line zero-sequence current, magnitude	A
3I0R ANG	3I0RFA	Remote line zero-sequence current, angle	Degrees
VφR MAG	VφR	Remote line voltage, magnitude, Phase φ	kV
VφR ANG	VφRFA	Remote line voltage, angle, Phase φ	Degrees
VφφR MAG	VφφR	Remote line phase-phase voltage, magnitude, Phase φφ	kV
VφφR ANG	VφφRFA	Remote line phase-phase voltage, angle, Phase φφ	Degrees
V1R MAG	V1R	Remote line positive-sequence voltage, magnitude	kV
V1R ANG	V1RFA	Remote line positive-sequence voltage, angle	Degrees
3V2R MAG	3V2R	Remote line negative-sequence voltage, magnitude	kV
3V2R ANG	3V2RFA	Remote line negative-sequence voltage, angle	Degrees
3V0R MAG	3V0R	Remote line zero-sequence voltage, magnitude	kV
3V0R ANG	3V0RFA	Remote line zero-sequence voltage, angle	Degrees
FREQ	FREQ	Frequency	Hz

[a] φ = A, B, or C.
[b] See *Table I.5* for the DNP3 reference data map.
[c] All voltages and currents are fundamental frequency phasors scaled to rms and with their angles referenced to V1.
[d] Primary kV and A.
[e] Remote signals included only if the Port 6 direct point-to-point fiber-optic channel is available.

Analog Quantities Available Via SEL Fast Meter Protocol

Table E.4 lists the analog quantities available from the SEL-T400L over SEL Fast Meter protocol (see *Section 9: SCADA and HMI Protocols* for more information). These voltages and currents are frequency-compensated phasors scaled to rms and referenced to the positive-sequence voltage angle (see *Appendix G: Signal Processing* for more information on frequency and phasor measurement). If the direct point-to-point fiber-optic channel is connected and operational on Port 6, the SEL Fast Meter data include remote voltages and currents. Only the remote line current (and not the individual W and X currents) is available, per the remote relay LINEI setting.

Table E.4 Analog Quantities Available Via SEL Fast Meter Protocol

Label[a]	Description[b]	Units[c]
IφIM_P	Line current, imaginary, Phase φ	A
IφRE_P	Line current, real, Phase φ	A
IφWIM_P	Channel W current, imaginary, Phase φ	A
IφWRE_P	Channel W current, real, Phase φ	A
IφXIM_P	Channel X current, imaginary, Phase φ	A
IφXRE_P	Channel X current, real, Phase φ	A
VφIM_P	Line voltage imaginary, Phase φ	V
VφRE_P	Line voltage real, Phase φ	V
IφRIM_P	Remote[d] line current, imaginary, Phase φ	A
IφRRE_P	Remote line current, real, Phase φ	A
VφRIM_P	Remote line voltage, imaginary, Phase φ	V
VφRRE_P	Remote line voltage, real, Phase φ	V
FREQ	System frequency	Hz
FLOC	Fault location (best result selected based on TW and impedance methods)	LLUNIT[e]

[a] φ = A, B, or C.
[b] All voltages and currents are fundamental frequency phasors scaled to rms and with their angles referenced to V1.
[c] Primary V and A.
[d] Remote signals included only if the Port 6 direct point-to-point fiber-optic channel is available.
[e] Miles or kilometers, based on the LLUNIT setting.

Analog Quantities Related to Events

Table E.5 lists analog quantities related to events or to relay operation in general. Different subsets of these data are available on the relay front-panel HMI, via the SEL ASCII **HISTORY** and **SUMMARY** commands, via the DNP3 LAN/WAN protocol, and in the header files (.HDR) of the MHR and TDR COMTRADE records.

Section 5: Fault and Event Recording provides more information on these analog quantities.

Table E.5 Event-Related Analog Quantities Available on Front-Panel HMI, Via SEL ASCII HIS and SUM Commands, in the COMTRADE .HDR Files and Via the DNP3 LAN/WAN Protocol (Sheet 1 of 4)

Label[a]	DNP3 Label[b]	Description[c]	Format or Units[d]	Relay HMI	HIS	SUM	.HDR File	DNP3
Basic Event Data								
Event_Date	N/A	Event trigger date	yyyy/mm/dd	×	×	×	×	
Event_Time	FTIME	Event trigger time	hh:mm:ss.ssss	×	×		×	×
Event_Numer	N/A	Unique event identifier (counter)	#####	×	×	×	×	
Targets	N/A	Event targets	List of target names	×	×	×	×	
FTIME[e]	FFTIM	Time of fault	hh:mm:ss.ssss			×	×	×

Table E.5 Event-Related Analog Quantities Available on Front-Panel HMI, Via SEL ASCII HIS and SUM Commands, in the COMTRADE .HDR Files and Via the DNP3 LAN/WAN Protocol (Sheet 2 of 4)

Label[a]	DNP3 Label[b]	Description[c]	Format or Units[d]	Relay HMI	HIS	SUM	.HDR File	DNP3
FLOC	FLOC	Fault location (best result selected based on TW and impedance methods)	LLUNIT[f]	×	×	×	×	×
Event Currents, Voltages, and Frequency								
FREQ	FFREQ	System frequency	Hz	×	×	×	×	×
Iφ MAG	FIφMP	Line prefault current, magnitude, Phase φ	A			×	×	×
Iφ ANG	FIφAP	Line prefault current, angle, Phase φ	Deg			×	×	×
3I2 MAG	F3I2MP	Line prefault current, negative-sequence, magnitude	A			×	×	×
3I2 ANG	F3I2AP	Line prefault current, negative-sequence, angle	Deg			×	×	×
3I0 MAG	F3I0MP	Line prefault current, zero-sequence, magnitude	A			×	×	×
3I0 ANG	F3I0AP	Line prefault current, zero-sequence, angle	Deg			×	×	×
Vφ MAG	FVφMP	Line prefault voltage magnitude, Phase φ	kV			×	×	×
Vφ ANG	FVφAP	Line prefault voltage angle, Phase φ	Deg			×	×	×
IφR MAG	FIφRMP	Remote[g] line prefault current, magnitude, Phase φ	A			×	×	×
IφR ANG	FIφRAP	Remote line prefault current, angle, Phase φ	Deg			×	×	×
3I2R MAG	F3I2RMP	Remote line prefault current, negative-sequence, magnitude	A			×	×	×
3I2R ANG	F3I2RAP	Remote line prefault current, negative-sequence, angle	Deg			×	×	×
3I0R MAG	F3I0RMP	Remote line prefault current, zero-sequence, magnitude	A			×	×	×
3I0R ANG	F3I0RAP	Remote line prefault current, zero-sequence, angle	Deg			×	×	×
VφR MAG	FVφRMP	Remote line prefault voltage, magnitude, Phase φ	kV			×	×	×
VφR ANG	FVφRAP	Remote line prefault voltage, angle, Phase φ	Deg			×	×	×
Iφ MAG	FIφM	Line fault current, magnitude, Phase φ	A			×	×	×
Iφ ANG	FIφA	Line fault current, angle, Phase φ	Deg			×	×	×
3I2 MAG	F3I2M	Line fault current, negative-sequence, magnitude	A			×	×	×
3I2 ANG	F3I2A	Line fault current, negative-sequence, angle	Deg			×	×	×
3I0 MAG	F3I0M	Line fault current, zero-sequence, magnitude	A			×	×	×
3I0 ANG	F3I0A	Line fault current, zero-sequence, angle	Deg			×	×	×
Vφ MAG	FVφM	Line fault voltage, magnitude, Phase φ	kV			×	×	×
Vφ ANG	FVφA	Line fault voltage, angle, Phase φ	Deg			×	×	×
IφR MAG	FIφRM	Remote line fault current, magnitude, Phase φ	A			×	×	×
IφR ANG	FIφRA	Remote line fault current, angle, Phase φ	Deg			×	×	×

Table E.5 Event-Related Analog Quantities Available on Front-Panel HMI, Via SEL ASCII HIS and SUM Commands, in the COMTRADE .HDR Files and Via the DNP3 LAN/WAN Protocol (Sheet 3 of 4)

Label[a]	DNP3 Label[b]	Description[c]	Format or Units[d]	Relay HMI	HIS	SUM	.HDR File	DNP3
3I2R MAG	F3I2RM	Remote line fault current, negative-sequence, magnitude	A			×	×	×
3I2R ANG	F3I2RA	Remote line fault current, negative-sequence, angle	Deg			×	×	×
3I0R MAG	F3I0RM	Remote line fault current, zero-sequence, magnitude	A			×	×	×
3I0R ANG	F3I0RA	Remote line fault current, zero-sequence, angle	Deg			×	×	×
VφR MAG	FVφRM	Remote line fault voltage magnitude, Phase φ	kV			×	×	×
VφR ANG	FVφRA	Remote line fault voltage angle, Phase φ	Deg			×	×	×
Additional Information About Fault Locating								
SE_TW_Location1	FTWFLSE1	Single-ended traveling-wave fault location 1	LLUNIT[f]				×	×
SE_TW_Location2	FTWFLSE2	Single-ended traveling-wave fault location 2	LLUNIT[f]				×	×
SE_TW_Location3	FTWFLSE3	Single-ended traveling-wave fault location 3	LLUNIT[f]				×	×
SE_TW_Location4	FTWFLSE4	Single-ended traveling-wave fault location 4	LLUNIT[f]				×	×
DE_TW_Location	FTWFLME	Double-ended traveling-wave fault location	LLUNIT[f]				×	×
SE_Z-Based_Location	FZFLSE	Single-ended impedance-based fault location	LLUNIT[f]				×	×
DE_Z-Based_Location	FZFLME	Double-ended impedance-based fault location	LLUNIT[f]				×	×
First_TW_Time_Local	FILTWMS, FILTWUS, FILTNS	Time stamp of the first local traveling wave compensated for the CT cable delay.	yyyy/mm/dd hh:mm:ss.XXXXXXXX				×	×
First_TW_Time_Remote	FIRTWMS, FIRTWUS, FIRTNS	Time stamp of the first remote traveling wave compensated for the CT cable delay.	yyyy/mm/dd hh:mm:ss.XXXXXXXX				×	×
Additional Information Useful When Evaluating the SEL-T400L in the Field								
EVNTCNT	EVNTCNT	Counts events where the overcurrent supervision picks up for one or more of these relay tripping elements and schemes that are enabled and configured to trip	XXXXXXXXXX				×	×
TRPCNT	TRPCNT	Counts SEL-T400L trip events	XXXXXXXXXX				×	×
Line Monitor Data								
LMETOT	LMETOT	Line monitoring total event count[h]	integer					×
LMLOC	LMLOC	Line monitoring alarm location[i]	LLUNIT[f]					×
LMLOCB1	LMLOCB1	Line monitoring Blocking Region 1 alarm location[i]	LLUNIT[f]					×
LMLOCB2	LMLOCB2	Line monitoring Blocking Region 2 alarm location[i]	LLUNIT[f]					×

Table E.5 Event-Related Analog Quantities Available on Front-Panel HMI, Via SEL ASCII HIS and SUM Commands, in the COMTRADE .HDR Files and Via the DNP3 LAN/WAN Protocol (Sheet 4 of 4)

Label[a]	DNP3 Label[b]	Description[c]	Format or Units[d]	Relay HMI	HIS	SUM	.HDR File	DNP3
Calibration Settings Helpful When Analyzing Relay Operation (Complete List of User Settings Is Provided in the .HDR File)								
TWDSW	N/A	Parameter of the differentiator-smoother filter the SEL-T400L uses to measure traveling waves	1 MHz samples count				×	
TWCPTR	N/A	Remote line TWCLPT setting (TW CT cable line propagation delay)	XX.XXX microseconds				×	

[a] φ = A, B, or C.
[b] See *Table I.5* for the DNP3 reference data map.
[c] All voltages and currents are fundamental frequency phasors scaled to rms and with their angles referenced to V1.
[d] Primary kV and A.
[e] Fault Time. For definition see *Selecting and Reporting Best Fault Location Results on page 4.13*.
[f] Miles or kilometers, based on the LLUNIT setting.
[g] Remote signals included only if the Port 6 direct point-to-point fiber-optic channel is available.
[h] This counter may decrease at midnight when counters within the blocking regions autoreset.
[i] Location with highest event count if the alarm condition is satisfied at multiple locations.

This page intentionally left blank

APPENDIX F

Diagnostics

Introduction

The SEL-T400L continuously performs extended diagnostic self-checks on the hardware to detect failures and out-of-tolerance conditions. These tests run simultaneously with the protection algorithms but have no adverse effects on relay performance. The relay self-check implementation maximizes both sensitivity and coverage of the continuous checks to prevent unintended relay operation resulting from internal relay failures.

The relay reports out-of-tolerance conditions as a status warning or as a status failure. For conditions that do not compromise protection functions, but which are beyond expected limits, the relay issues a status warning and continues operation (status warning). A severe out-of-tolerance condition causes the relay to declare a status failure and to enter a protection-disabled state (status failure). During a protection-disabled state, the relay suspends protection element processing and trip/close logic processing and de-energizes all control outputs. When the relay is disabled, the **ENABLED** front-panel LED is not illuminated.

You can correct transitory failure conditions (such as soft memory errors caused by high-energy cosmic particles) by restarting the relay. The SEL-T400L continuously monitors all memory chips and automatically restarts upon detecting errors in internal memory. The relay performs and logs in the SER as many as three diagnostic restarts in a seven-day period. After this limit is exceeded, the relay refrains from further restarts and disables protection until you manually restart the relay. Be sure to first collect all information related to abnormal relay behavior before restarting the relay (See *Table F.2* for more information).

Table F.1 summarizes the alarm Relay Word bits and the different conditions that cause them to assert.

Table F.1 Alarm Relay Word Bits

Alarm Relay Word Bit	Description
HALARML	Latches for any relay failures
HALARMP	Pulses for five seconds when a warning condition occurs
HALARM	OR combination of HALARMP and HALARML
SETCHG	Pulses for one second whenever settings are changed
ACCESS	Asserts when a user is logged in at Access Level B or higher
BADPASS	Pulses for approximately one second after entry of three successive bad passwords
SALARM	OR combination of TWTEST, PLAY, PLAYP, BADPASS, and SETCHG
ALARM	OR combination of HALARM AND SALARM

Depending on relay status, the diagnostic self-checks either cause Relay Word bit HALARMP to pulse for 5 seconds or permanently latch Relay Word bit HALARML. Relay Word bit HALARM is the OR combination of the HALARMP and HALARML bits. Use *Table F.2* to understand how the HALARMP and HALARML bits respond to any particular self-test of the SEL-T400L.

In addition to performing hardware diagnostics, the relay monitors settings changes and password entry attempts. The relay asserts the SETCHG Relay Word bit for a settings change and the BADPASS Relay Word bit after three unsuccessful password entry attempts. Relay Word bit SALARM is the OR combination of the TWTEST, PLAY, PLAYP, BADPASS, and SETCHG bits. The BADPASS and SETCHG bits assert for approximately one second. Monitor the SETCHG and BADPASS bits remotely to detect unjustified or mistaken attempts to gain access to the relay (including attempts to change settings).

The **PULSE** command is useful during commissioning to test any of the seven output contacts (see *PULSE on page C.12* for more information). To monitor use of this function, the relay asserts Relay Word bit ALARM when you issue the **PULSE** command. The ALARM bit remains asserted for a duration that you specify when you issue the **PULSE** command (as long as 30 seconds). Monitor the ALARM bit remotely to detect unjustified or mistaken attempts to test the relay.

The SEL-T400L also monitors its operating environment for the presence of excessive and sustained electromagnetic interference (EMI) noise that may affect the traveling-wave protection (see *Appendix G: Signal Processing* for more details). Although EMI has no relation to relay health and causes no ALARM output to assert upon its detection, an excessive EMI condition causes the relay to selectively and momentarily disable traveling-wave elements and indicate the condition by turning the **ARMED** target LED from green to either yellow or red. Whether the LED illuminates yellow or red depends on other conditions (see *ARMED LED Target Logic on page 2.60*).

Diagnostic Status Reporting

The SEL-T400L provides local indication of relay health and status via the **ENABLED** target LED and front-panel display messages. See *Table F.2* for a complete list of the diagnostic messages.

The SEL-T400L provides a dedicated Form C output contact (*Figure F.1*) for fail-safe reporting of the diagnostic status to the substation automation system, HMI, or SCADA. When the relay is operating normally, the contact between Terminals 13 and 14 is open and the contact between Terminals 15 and 14 is closed. Use the normally closed contact (b contact) provided between Terminals 13 and 14 to monitor relay problems or suspicious activities. The b contact closes by itself if internal failures prevent the relay from keeping it open.

The ALARM output is factory-set and operates for hardware failures, settings changes, three unsuccessful password entry attempts, and when relay power is off (ALARM = NOT (HALARM OR SALARM)). Depending on the cause of the ALARM, the output either asserts permanently or pulses.

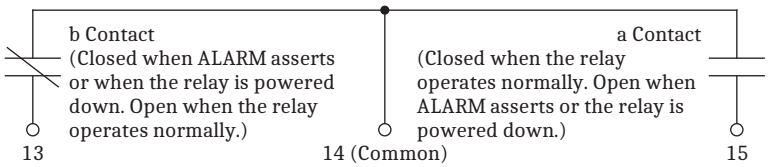

Figure F.1 Alarm Contact Output and Terminal Assignments

The SEL-T400L reports certain failures via engineering access Ethernet Port 5. *Table F.2* lists all diagnostic self-checks the relay reports via Port 5. Enable Telnet and set the AUTO setting to Y on Port 5 to use this diagnostic reporting method. Refer to *Telnet Protocol on page 9.6* for more information on how to use the communications functions of Port 5.

When investigating diagnostic alarms, use the status command (**STA**) to verify relay status. *Figure F.2* shows an example of a status report for a healthy relay with neither errors nor warnings, and the Temperature field showing the internal relay temperature.

NOTE: A compressed version of the STATUS report, which also contains additional relay self-test information, is available in comma-delimited format via the **CSTATUS** command for ease of machine parsing. See *SEL Compressed ASCII Commands on page 9.9* for additional information.

```
=>>STA <Enter>

SEL-T400L                                   Date: 2017/03/04  Time: 19:04:45.901
Station A                                   Time Source: HIRIG
                                            Serial Number: 1170231369

FID=SEL-T400L-R100-V0-Z001001-D20170321     CID=FB54

Failures
  No Failures

Warnings
  No Warnings

Temperature
  41.7  degrees Celsius

Relay Enabled

=>>
```

Figure F.2 Status Report of a Healthy Relay (Example)

SEL-T400L Diagnostic Details and Remediation Steps

Table F.2 lists all diagnostic messages that the relay issues and steps SEL recommends for each message. In particular, these steps indicate whether you can leave the relay in service or if you need to remove the relay from service.

Table F.2 Diagnostic Messages and Action Items (Sheet 1 of 3)

Self-Test Description	HMI Message on Failure	Alarm Relay Word Bits	Port 5 Message	Protection Disabled on Failure	Recommended Action
Main Board Temperature Warning	TEMPERATURE WARN	HALARMP (Pulsed)	Yes	No	Issue the **STA** command to see the actual Main Board temperature. Ensure that the relay is operating in an environment so that the Main Board temperature value is between –45°C and 100°C. If the relay is operating within the stated operating temperature range (–40° to +85°C ambient) when this message is displayed, remove the relay from service and return it to SEL for service.
Main Board Power Supply Out of Tolerance	MB POWER SUPPLY	HALARMP (Pulsed)	Yes	No	Do not switch the relay off or perform other testing that can overwrite event reports and SER data. From the CAL level, issue the **STA**, **VEC**, and **VEC D** commands and save the reports. Remove the relay from service and return it to SEL.
Analog Input Board Power Supply Out of Tolerance	AI POWER SUPPLY	HALARMP (Pulsed)	Yes	No	Do not switch the relay off or perform other testing that can overwrite event reports and SER data. From the CAL level, issue the **STA**, **VEC**, and **VEC D** commands and save the reports. Remove the relay from service and return it to SEL.
Current Channel DC Offset Out of Tolerance	DC OFFSET WARN	HALARMP (Pulsed)	No	No	Do not switch the relay off or perform other testing that can overwrite event reports or SER data. From the CAL level, issue the **STA**, **VEC**, and **VEC D** commands and save the reports. Remove the relay from service and return it to SEL.
Voltage Channel DC Offset Out of Tolerance	DC OFFSET WARN	No alarms	No	No	Do not switch the relay off or perform other testing that can overwrite event reports or SER data. From the CAL level, issue the **STA**, **VEC**, and **VEC D** commands and save the reports. Remove the relay from service and return it to SEL.
Settings Failure	SETTINGS FAILURE	HALARML, HALARM (Latched)	Yes	Yes	Issue the **STA C** command from Access Level 2. If the message displays a second time, attempt to restore the default relay settings by using the **R_S** command. If the problem resolves, download your relay settings and follow standard steps for testing and commissioning the relay. If the attempt fails, issue the **VEC** and **VEC D** commands from Access Level 2, and save the report. Do not perform other testing that can overwrite event reports and SER data. Remove the relay from service and return it to SEL.

Table F.2 Diagnostic Messages and Action Items (Sheet 2 of 3)

Self-Test Description	HMI Message on Failure	Alarm Relay Word Bits	Port 5 Message	Protection Disabled on Failure	Recommended Action
HMI Board Missing Warning	HMI WARNING	HALARMP (Pulsed)	No	No	Do not switch the relay off or perform other testing that can overwrite event reports and SER data. From Access Level 2, issue the **VEC** and **VEC D** commands and save the reports. Remove the relay from service and return it to SEL. **Note:** Following standard ESD safe working practices, verify that the connectors of the flat cable linking the HMI to the main board are properly seated and fully latched. Access the HMI cable assembly by removing the relay front panel.
EEPROM Warning (Invalid MAC address)	EEPROM WARNING	HALARMP (Pulsed)	Yes	No	Do not switch the relay off or perform other testing that can overwrite event reports and SER data. From Access Level 2, issue the **VEC** and **VEC D** commands and save the reports. Remove the relay from service and return it to SEL.
EEPROM Failure	EEPROM FAILURE	HALARML, HALARM (Latched)	Yes	Yes	Do not switch the relay off or perform other testing that can overwrite event reports and SER data. From Access Level 2, issue the **VEC** and **VEC D** commands and save the reports. Remove the relay from service and return it to SEL.
USB Failure	USB FAILURE	HALARMP (Pulsed)	Yes	No	Do not switch the relay off or perform other testing that can overwrite event reports and SER data. From Access Level 2, issue the **VEC** and **VEC D** commands and save the reports. Remove the relay from service and return it to SEL.
SD Card Warning	SD CARD WARNING	HALARMP (Pulsed)	Yes	No	Contact SEL for a replacement SD card. Alternatively, return the relay to SEL. **Note:** A faulty SD card results in the loss of event reports. Protection is still functional and SER data are still available, but no event reports will be saved.
Real-Time Clock Warning	RTC WARNING	No alarms	Yes	No	Issue the **STA C** command from Access Level 2. If the message displays a second time, issue the **VEC** and **VEC D** commands from Access Level 2 and save the reports. Do not perform other testing that can overwrite event reports and SER data. Consider replacing the battery (see *Replacing the Lithium Battery on page 10.25*). If the problem persists, remove the relay from service and return it to SEL.
Random-Access Memory Failure	RAM FAILURE	HALARML, HALARM (Latched)	Yes	Yes	Issue the **STA C** command from Access Level 2. If the message displays a second time, issue the **VEC** and **VEC D** commands from Access Level 2 and save the reports. Do not perform other testing that can overwrite event reports and SER data Remove the relay from service and return it to SEL.
SELBOOT Checksum Warning	FLASH WARNING	HALARMP (Pulsed)	Yes	No	Do not switch the relay off. From Access Level 2, issue the **VEC** and **VEC D** commands and save the reports. Remove the relay from service and return it to SEL.

Table F.2 Diagnostic Messages and Action Items (Sheet 3 of 3)

Self-Test Description	HMI Message on Failure	Alarm Relay Word Bits	Port 5 Message	Protection Disabled on Failure	Recommended Action
Checksum Failure	FLASH FAILURE	HALARML, HALARM (Latched)	Yes	Yes	Do not switch the relay off or perform other testing that can overwrite event reports and SER data. From Access Level 2, issue the **VEC** and **VEC D** commands and save the reports. Remove the relay from service and return it to SEL.
Central Processor Failure	CPU FAILURE	HALARML, HALARM (Latched)	No	Yes	Turn the relay off and back on. If it turns on successfully, enter Access Level 2, issue the **VEC** and **VEC D** commands, and save the reports. Remove the relay from service and return it to SEL.
Analog Input Board ADC Subsystem Failure	DATA ACQ FAILURE	HALARML, HALARM (Latched)	No	Yes	Turn the relay off and back on. If the message displays a second time, issue the **VEC** and **VEC D** commands from Access Level 2 and save the reports. Do not perform other testing that can override event reports and SER data. Remove the relay from service and return it to SEL.
Analog Input Board Critical Single-Event Upset Detected	AI FPGA FAILURE	HALARML, HALARM (Latched)	Yes	Yes	Turn the relay off and back on. If the message displays a second time, issue the **VEC** and **VEC D** commands from Access Level 2 and save the reports. Take the relay out of service and return it to SEL.
Main Board Critical Single-Event Upset Detected	MB SOC FAILURE	HALARML, HALARM (Latched)	Yes	Yes	Turn the relay off and back on. If the message displays a second time, issue the **VEC** and **VEC D** commands from Access Level 2 and save the reports. Do not perform other testing that can overwrite event reports and SER data. Remove the relay from and return it to SEL.
Main Board Processor Overburden Condition Detected	MB PROC FAILURE	HALARML, HALARM (Latched)	Yes	Yes	Do not switch the relay off or perform other testing that can overwrite event reports and SER data. From Access Level 2, issue the **VEC** and **VEC D** commands and save the reports. Contact SEL for further instructions.
Main Board Power Supply Failure	MB POWER SUPPLY	HALARML, HALARM (Latched)	Yes	Yes	Do not switch the relay off or perform other testing that can overwrite event reports and SER data. From Access Level 2, issue the **VEC** and **VEC D** commands and save the reports. Remove the relay from service and return it to SEL.
Analog Input Board Power Supply Failure	AI POWER SUPPLY	HALARML, HALARM (Latched)	Yes	Yes	Do not switch the relay off or perform other testing that can overwrite event reports and SER data. From Access Level 2, issue the **VEC** and **VEC D** commands and save the reports. Remove the relay from service and return it to SEL.

APPENDIX G

Signal Processing

The SEL-T400L Relay protection elements use traveling waves (TWs) and incremental quantities for speed and sensitivity. The relay also calculates phasors for metering, impedance-based fault locating, and several supervisory functions such as open-pole and loss-of-potential detection.

This appendix explains the basic signal processing of the SEL-T400L Relay. Also, this appendix explains the operating principles and signal processing for several advanced functions such as line monitoring and event playback testing.

1. Sampling and Processing Rates

Figure G.1 shows a simplified signal processing diagram of the SEL-T400L. The relay acquires the input currents and voltages at a sampling rate of 1 MHz (1 million samples per second). It prefilters the analog currents and voltages with an analog low-pass filter to avoid aliasing. The effective measurement bandwidth of the SEL-T400L Relay is about 400 kHz.

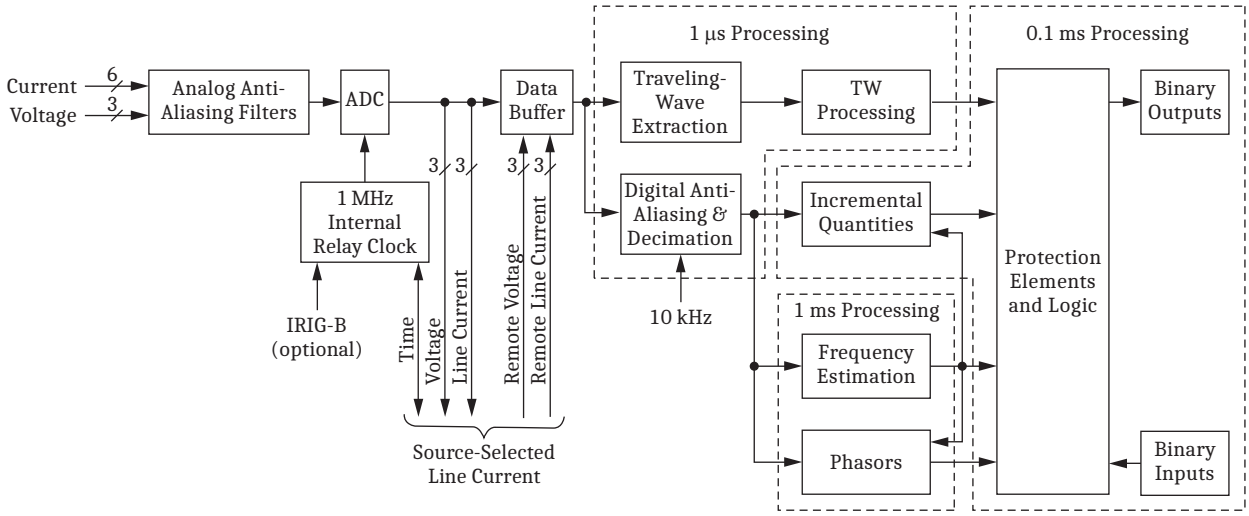

Figure G.1 Simplified Signal Processing Diagram of the SEL-T400L

The SEL-T400L samples currents and voltages every microsecond, synchronously with the internal relay clock. Measurements are time coherent and compensate for the low-pass filter group delay during time-stamping of the samples. The internal relay clock, in turn, is phase-locked with the external time when a high-accuracy IRIG-B time source is connected to the relay. Voltage and current samples are acquired with a 100 ns or better timing accuracy. With a high-accuracy IRIG time source, all samples are traceable to the UTC microsecond at which they were acquired. This allows for the reliable comparison of events acquired by multiple SEL-T400L relays. A 1 MHz sampling frequency and 18-bit resolution of individual ADC channels offers unprecedented ability to capture and compare even minor power system transients. When the direct point-to-point fiber-optic channel is available, the internal clocks of the two connected

SEL-T400L Relays phase-lock to each other to enable the TW87 protection scheme and multiended TW-based fault locating without reliance on the presence or accuracy of any external time sources.

The SEL-T400L time-stamps its oscillography records with reference to external time if a high-accuracy IRIG-B time source is connected to the local relay. When you use the direct point-to-point fiber-optic channel, both relays reference their records to external time if at least one of the two SEL-T400L Relays is connected to a high-accuracy IRIG-B time source.

The SEL-T400L uses a differentiator-smoother filter (see *Traveling Waves on page G.4*) to calculate current and voltage TWs from the 1 MHz samples. The relay processes TW signals at the rate of 1 MHz.

The SEL-T400L calculates the incremental currents and voltages at a rate of 10 kHz (one sample every 100 µs). It obtains the 10 kHz currents and voltages by using a digital anti-aliasing filter to downsample the 1 MHz samples. Next, as *Incremental-Quantity Loop Currents and Voltages on page G.7* and *Incremental Quantities on page G.9* explain, the relay calculates the incremental currents and voltages, replica currents, and other derived signals from the 10 kHz samples. The SEL-T400L processes the incremental quantities at the rate of 10 kHz.

The SEL-T400L Relay scans its binary inputs, runs its protection logic, and asserts its binary outputs at a rate of 10 kHz. The TW processing runs every 1 µs and provides the relevant data to the protection logic every 100 µs.

2. Extended Self-Monitoring

The SEL-T400L monitors the integrity of its power supply and digital circuits through the use of methods developed for and used by other SEL devices.

In addition, the SEL-T400L Relay incorporates real-time monitoring of its input voltages and currents, using the principle of redundant measurements and data cross-checking. The SEL-T400L has a fourth supervisory analog-to-digital converter (ADC) channel for each group of three-phase channels, as *Figure G.2* illustrates. Early in the analog signal processing chain, the relay uses a summing amplifier to create a composite signal as a linear combination of the three-phase signals. The extra ADC channel measures the composite signal. The phase signal combination is such that it yields a non-zero signal under balanced power system conditions. The supervision algorithm calculates the same linear combination from the three-phase signal samples and compares it with the measured value of the composite signal. Any discrepancy beyond the expected level based on component tolerances signifies a circuit failure, sets the SEL-T400L data error bit (Relay Word bit DINVL), and secures the protection elements and logic.

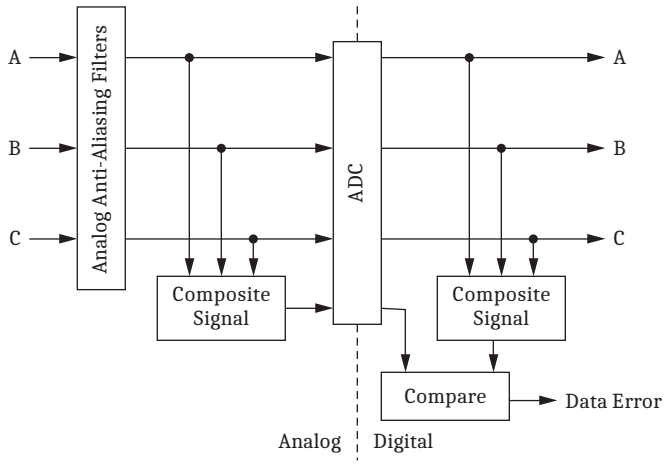

Figure G.2 SEL-T400L Analog Circuitry Self-Monitoring

The diagnostics algorithm also checks if the voltage or current data are within the range of the ADC (see *Specifications on page 1.12*). The algorithm asserts a data error bit (DINVLS) if any of the voltage or current channels are clipped. The diagnostics algorithm runs once every microsecond.

To further improve security, the SEL-T400L Relay transmits the current and voltage information between internal subsystems and circuit boards in a digital format and it uses strong data integrity algorithms to protect the digitally transmitted information.

When the local relay uses data from the remote relay over the direct point-to-point fiber-optic channel, the remote relay provides data integrity information (Relay Word bits DINVR and DINVRS) to the local relay to keep the local relay secure in case a component failure occurs at the remote relay.

Table G.1 Analog Filter and ADC Diagnostics Relay Word Bits

Relay Word Bit	Description
DINVL	Invalid local voltage or current data
DINVLS	Invalid or clipped local voltage or current data
DINVR	Invalid remote voltage or current data
DINVRS	Invalid or clipped remote voltage or current data

As a result of its extended self-monitoring, the SEL-T400L Relay exhibits strong fail-safe attributes. There is a very high probability that the diagnostics algorithm detects any component failure within microseconds, preventing unexpected relay operation should the failure render current and voltage patterns similar to fault conditions on the protected line.

The SEL-T400L Relay is a good candidate for extended maintenance cycles or even for a run-to-fail maintenance strategy to provide savings in maintenance costs and to avoid periodic testing and the human errors it can introduce.

3. Scaling Relay Currents

The SEL-T400L uses settings in secondary amperes and volts. The PTR setting defines the secondary voltage base. Use the PTR setting when selecting the voltage and impedance settings of the relay. The effective CT ratio defines the secondary current base. In single CT input applications (LINEI = IW or LINEI = IX), the CT ratio of the used current input (CTRW or CTRX) is the effective CT

ratio. In dual-input applications (LINEI = COMB), the effective CT ratio is the greater of the two CT ratios [max(CTRW, CTRX)]. Use the effective CT ratio when calculating the current and impedance settings of the relay.

Figure G.3 illustrates the SEL-T400L current scaling in dual-input applications. One of the two taps is always precisely 1, and the other tap is always less than or equal to 1.

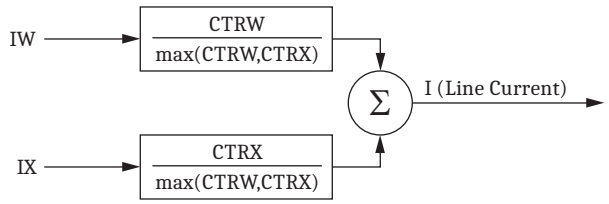

Figure G.3 Scaling Secondary Currents in Dual-input Applications (LINEI = COMB)

The TW87 protection scheme combines the local and remote TW currents to calculate the TW87 operating and restraining signals. The scheme scales the resulting TW operating signal to the local relay CT base, as shown in *Figure G.4*.

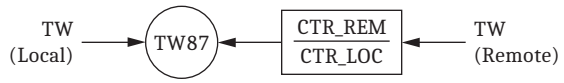

Figure G.4 Scaling Secondary Currents for the TW87 Protection Scheme

The relay allows for a maximum CTRW and CTRX mismatch as high as 1:15, and for a local and remote CT ratio mismatch as high as 1:10.

4. Traveling Waves

The SEL-T400L uses TWs accordingly in various functions including TW disturbance detection, EMI monitoring, the TW32 directional element, the TW87 protection scheme, and TW-based fault locating.

A fault current, if we consider it over a period of a few hundreds of microseconds, is a series of quasi steady-state values. It changes very slowly during a series of quasi steady-state intervals but very sharply between just two quasi steady-state intervals. From the signal processing point of view, a traveling wave is a sharp change between two quasi steady-state signal levels. The SEL-T400L uses a finite impulse response filter to extract TWs from the raw input signals. The filter combines the operation of numerical differentiation and low-pass filtering (or smoothing) and is therefore what we call the differentiator-smoother.

Figure G.5 shows the filter coefficients of the differentiator-smoother; ΔT denotes the width of the differentiator-smoother window. *Figure G.6* illustrates its operation. The differentiator-smoother filter responds to an ideal step change in the raw input signal with a triangle-shaped output, and it responds to a ramp transition between two levels with a parabola-shaped output. The gain of the differentiator-smoother filter is such that the peak of the triangle-shaped response of the filter to an ideal step change in the input represents the value of the step in the input. As a result, the TW signals measured by the SEL-T400L retain information about the magnitude of the TWs measured at the relay inputs.

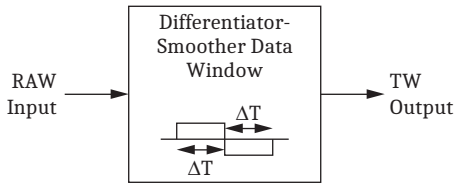

Figure G.5 Data Window of the Differentiator-Smoother Filter

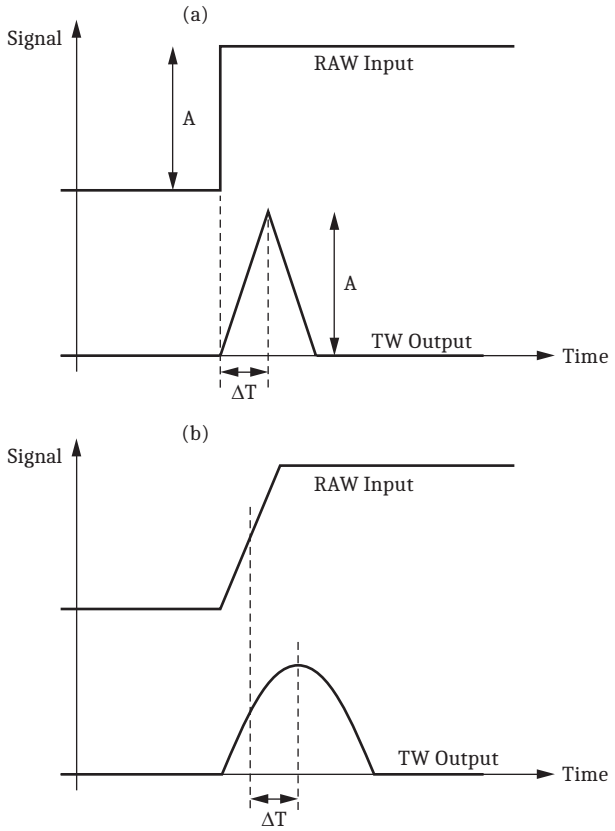

Figure G.6 TW Measurement: (a) an Ideal Step, and (b) a Ramp, in the Raw Input

This document refers to the output from the differentiator-smoother as a traveling-wave signal. Specifically, we establish the following:

- The peak of the differentiator-smoother output is the TW instantaneous magnitude.
- The time of the peak in the differentiator-smoother output is the TW arrival time.

The SEL-T400L further averages the current TW instantaneous magnitudes over a short sliding data window before using them in the TW87 protection scheme. This document refers to these TWs with extra filtering as filtered TW magnitudes.

The SEL-T400L calculates precise TW arrival times through the use of interpolation between the 1 MHz samples. The relay fits a curve to the TW data points near the peak of the differentiator-smoother output. The interpolated arrival time is the time of the maximum (for positive TWs) or minimum (for negative TWs) of this best-fit curve. The interpolation allows time-stamp resolution of about

0.2 µs. TW-based fault locating uses interpolated time stamps. The TW87 protection scheme uses the time stamps of TW signal samples and therefore works with a 1 µs time resolution.

The differentiator-smoother filter for all TW functions except the TW32 directional element of the SEL-T400L has a window length of 20 µs (2 • ΔT = 20 µs). This window is long enough to allow the relay to identify TWs that ramp up relatively slowly because of dispersion (i.e., when TW measurements are ramp transitions rather than step changes). At the same time, this window is short enough to allow the relay to separate two successive TWs spaced more than about 30 µs apart.

The TW32 element uses the same type of differentiator-smoother filter but with a longer window (e.g., 100 µs). The longer window allows compensating for a different frequency response of the voltage transformers with respect to current transformers. Typically, voltage TWs would lag current TWs because of the frequency response differences, and the longer window allows the TW32 logic to compensate for the difference. Also, the longer window provides better noise rejection especially in voltage signals that may exhibit a significant ringing effect associated with secondary wiring. Prior to firmware revision R103, the TW32 logic used the differentiator-smoother filter with a window of 20 µs.

The SEL-T400L calculates TWs for phase and mode (ground and aerial) signals, and applies both accordingly in various functions including TW disturbance detection, TW32 directional element, the TW87 protection scheme, and TW-based fault locating.

Specifically, we establish the following:

- The relay calculates the ground mode as TW0 = (TWA + TWB + TWC)/3.
- The relay calculates the alpha aerial mode referenced to A-phase as TWA – TW0. This mode is typically the highest and most reliable for A-phase-to-ground (AG) faults on overhead transmission lines. The relay uses similar equations to calculate the B-phase and C-phase referenced alpha modes.
- The relay calculates the beta aerial mode referenced to A-phase as (TWB – TWC) / $\sqrt{3}$. This mode is typically the highest and most reliable for B-phase-to-C-phase (BC) faults on overhead transmission lines. The relay uses similar equations to calculate the B-phase and C-phase referenced beta modes.

The high-resolution (1 MHz) oscillography record of the SEL-T400L contains raw currents and voltages as well as the parameters of the differentiator-smoother filter. Use SEL-5601-2 SYNCHROWAVE Event Software to calculate and plot the current and voltage traveling waves in both phase and modal reference frames.

The SEL-T400L qualifies TWs before using them in the TW87 protection scheme. The relay considers any given peak in the output from the differentiator-smoother to be valid if the raw input exhibits a sharp change, with the time of change and the magnitude of change consistent with the time and magnitude of the output from the differentiator-smoother. *Figure G.7* illustrates the concept of TW qualification. For the SEL-T400L to qualify any given TW as valid, the error between the ideal step (defined by the TW magnitude and arrival time) and the actual step in the raw input (the hatched area in *Figure G.7*) must be small relative to the TW magnitude.

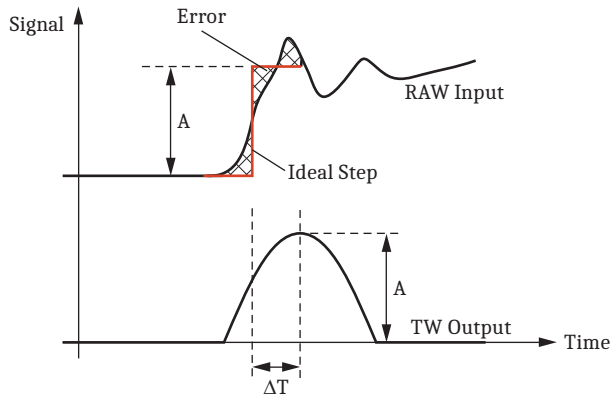

Figure G.7 Principle of Qualifying TWs for Use in the TW87 Protection Scheme

The relay emphasizes security in qualifying TWs for the TW87 protection scheme. In accordance with various applicable type test standards, the qualification algorithm rejects potential high-frequency transients in the relay inputs which, while unrelated to power system faults, are possible in the substation environment.

The SEL-T400L provides two Relay Word bits to signal detection of excessive EMI conditions at the local and remote relay as shown in *Table G.2*.

Table G.2 Electromagnetic Interference Monitoring Relay Word Bits

Relay Word Bit	Description
VILEMI	EMI activity detected in local voltages or currents
ILREMI	EMI activity detected in local or remote currents

5. Incremental-Quantity Loop Currents and Voltages

The SEL-T400L Relay uses incremental-quantity-based protection elements (TD21, TD32, starting logic, fault identification logic, etc.) to continuously monitor six protection loops to respond to all possible fault types. These loops are three ground loops (AG, BG, and CG) and three phase loops (AB, BC, and CA).

With reference to *Figure G.8*, a three-phase resistive-inductive (RL) system represents the protected line in the time domain. The SEL-T400L incremental-quantity-based elements use a frequency spectrum as wide as a few hundred hertz, so the system of *Figure G.8* disregards the shunt capacitance of the line. The three currents (i_A, i_B, and i_C) are the instantaneous currents the relay measures. The three voltages (v_A, v_B, and v_C) are, in general, voltage drops across the protected line. If the protected line is shorted out, however, the three voltages are the instantaneous line-to-ground voltages the relay measures.

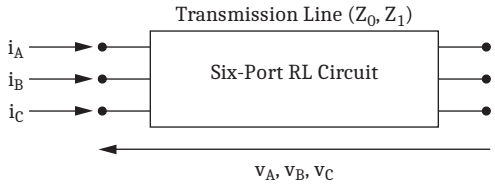

Figure G.8 Line Positive-Sequence (Z_1) and Zero-Sequence (Z_0) Impedances Tie Together the Phase Voltages and Currents of the Line

The loop voltages and loop replica currents are instantaneous signals derived in such a way that a pure resistance ties together the loop voltage and the loop replica current. Moreover, the SEL-T400L design selects this resistance to equal the positive-sequence line impedance magnitude as illustrated in *Figure G.9*.

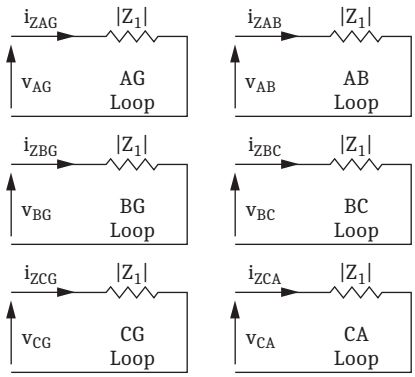

Figure G.9 Six Independent Protection Loops Designed in Such a Way That Each Loop Measures an Apparent Resistance Equal to the Magnitude of Z_1

Figure G.10 shows an electrical circuit that explains how the relay obtains the AG-loop replica current. This circuit mimics the protected line, so we call the current here replica current. Note that the "i_Z" naming convention of the replica current (implying a product of current and impedance) accounts for this current being effectively a voltage drop across the RL line circuit. Subscript 1 stands for the positive-sequence parameters, and subscript 0 stands for the zero-sequence parameters in *Figure G.10*. The ground loop voltages are the line-to-ground voltages in the respective phases (v_A, v_B, and v_C for the AG, BG, and CG loops, respectively).

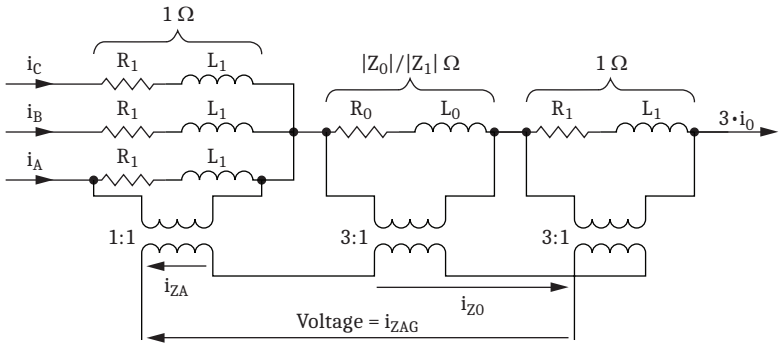

Figure G.10 Mimic Circuit for Deriving AG-Loop Current

Figure G.11 presents an electrical circuit that explains how the relay obtains the AB-loop replica current. The phase loop voltages are the line-to-line voltages in the respective phases (v_A-v_B, v_B-v_C, and v_C-v_A for the AB, BC, and CA loops, respectively).

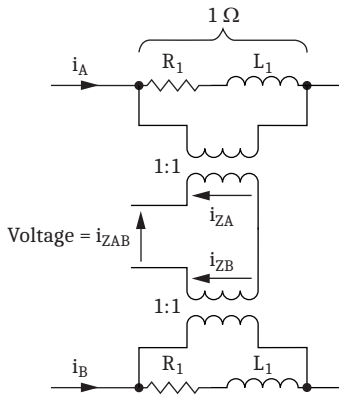

Figure G.11 Mimic Circuit for Deriving AB-Loop Current

The SEL-T400L is a microprocessor-based relay that derives the loop instantaneous voltages and replica currents by means of real-time calculations on the 10 kHz voltage and current samples. The analog circuits only illustrate the principles. The relay replicates numerically the mimic circuits from *Figure G.10* and *Figure G.11*.

The relay applies low-pass filtering to the loop voltages and loop replica currents before using them for protection.

The SEL-T400L stores the incremental loop voltages and replica currents in the IEEE COMTRADE file (see *Measured and Derived Quantities in the 10 kHz Oscillography on page G.10*). Use these stored signals for post-event analysis or when testing and troubleshooting the relay.

6. Incremental Quantities

The incremental-quantity-based protection elements of the SEL-T400L respond to the fault-induced components of the loop voltages and replica currents. These fault-induced components, called incremental quantities, are incremental changes between the present values of the signals and their one-cycle-old values.

Figure G.12 illustrates the method of deriving incremental quantities. The delay in *Figure G.12* is exactly one power cycle. To follow a changing power system frequency and maintain incremental-quantity accuracy, the SEL-T400L continuously measures the waveform frequency and adjusts the delay accordingly.

The SEL-T400L stores the incremental loop voltages and replica currents in the IEEE COMTRADE file (see *Measured and Derived Quantities in the 10 kHz Oscillography on page G.10*). Use these stored signals for post-event analysis or when testing and troubleshooting the incremental-quantity-based protection elements.

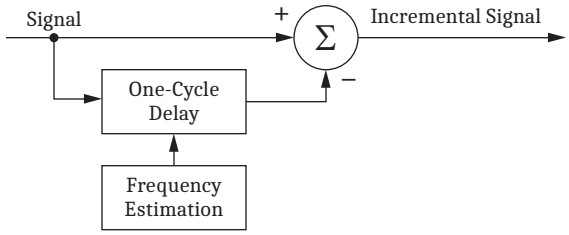

Figure G.12 Logic for Deriving Incremental Quantities

7. Measured and Derived Quantities in the 10 kHz Oscillography

For ease of event analysis, the 10 kHz COMTRADE oscillography file (TDR file) contains the measured and derived voltages and currents listed in *Table G.3*.

Table G.3 Measured and Derived 10 kHz Quantities

Label[a]	Description
Vφ	Line voltage, Phase φ
IφW	Channel W current, Phase φ
IφX	Channel X current, Phase φ
Iφ	Line current, Phase φ
DVφ	Incremental voltage, Phase φ
DIZφ	Incremental replica current, Phase φ
DIZ0	Incremental replica current, zero-sequence
FREQ	System frequency
VφR[b]	Remote line voltage, Phase φ
IφR[b]	Remote line current, Phase φ

[a] φ = A,B,C.
[b] Remote signals are included only if the direct point-to-point fiber-optic channel on Port 6 is available.

The measured signals (V, IW, IX, and I) are raw voltages and currents without additional low-pass filtering except the anti-aliasing filtering applied when decimating the 1 MHz samples to 10 kHz samples. The relay applies additional low-pass filtering to the derived signals (DV, DIZ, and DIZ0) for security of protection. The DV, DIZ, and DIZ0 signals therefore show a small group delay with respect to the voltage and current samples. Be aware of this delay when analyzing SEL-T400L records.

Use the derived quantities the SEL-T400L Relay recorded for an event when you perform an in-depth analysis of the relay operating principles or when you troubleshoot field cases. Calculate the loop incremental voltages and replica currents as listed in *Table G.4*.

Table G.4 Loop Incremental Voltages and Replica Currents[a]

Loop	Voltage (Δv)	Current (Δi_Z)
AG	DVA	DIZA – DIZ0
BG	DVB	DIZB – DIZ0
CG	DVC	DIZC – DIZ0
AB	DVA – DVB	DIZA – DIZB
BC	DVB – DVC	DIZB – DIZC
CA	DVC – DVA	DIZC – DIZA

[a] All signals are instantaneous values.

8. Loop Currents and Voltages in Steady State

Secondary injection test sets allow the specification of fundamental frequency currents and voltages as steady-state values when testing a relay, such as during commissioning (see *Section 11: Testing and Commissioning*). When using phasors to represent the loop currents and voltages in a steady state, remember that

the loop currents and voltages of the SEL-T400L are exactly equivalent to the loop currents and voltages of any six-loop distance protection element as illustrated in *Table G.5*.

Table G.5 Loop Currents and Voltages Represented by Phasors in a Steady State[a]

Loop	Voltage	Current
AG	VA	IA + (Z0/Z1 – 1) • I0
BG	VB	IB + (Z0/Z1 – 1) • I0
CG	VC	IC + (Z0/Z1 – 1) • I0
AB	VA – VB	IA – IB
BC	VB – VC	IB – IC
CA	VC – VA	IC – IA

[a] All signals are phasors.

Use *Table G.4* to determine the loop currents or voltages for any three-phase injection into the relay terminals. Conversely, use *Table G.5* to determine three-phase injection into the relay terminals for any desired loop current or voltage. Remember that the relationship between the injected signals and the loop signals depends on the Z_0 and Z_1 impedance settings of the relay (Z1MAG, Z1ANG, Z0MAG, and Z0ANG).

Table G.5 applies to the actual and the incremental signals. When changing phase signals from prefault state values to fault state values, calculate the incremental change, and then use *Table G.4* to determine the incremental loop currents and voltages in a steady state during the test fault condition.

9. Phasors

The SEL-T400L uses a full-cycle frequency-compensated Cosine filter (see *Figure G.13*) to calculate phasors on the 10 kHz samples. The SEL-T400L uses phasors only for auxiliary functions such as metering, so calculations of the phasors do not affect the speed of the SEL-T400L time-domain protection. The relay processes phasors once every millisecond.

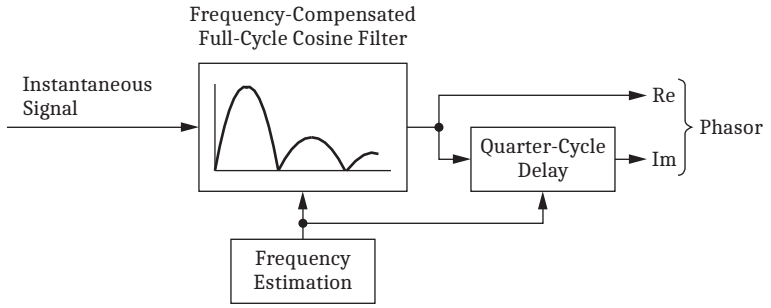

Figure G.13 Phasor Estimation Principle Using Frequency-Compensated Cosine Filtering

10. Frequency

The SEL-T400L calculates the waveform frequency on the 10 kHz samples of the voltage signals through use of a method that autocorrelates the measured waveform to find its repetition rate (the waveform period). The SEL-T400L uses frequency to compensate the phasors under off-nominal frequency conditions

(see *Figure G.13*) and to derive the incremental quantities (see *Figure G.12*). The relay processes the frequency estimation algorithm once every millisecond, and the frequency estimate is made available by the FREQ analog (see *Table G.3*).

The FREQOK Relay Word bit, when asserted, signifies that the relay is using the actual system frequency from a valid measurement. When FREQOK is deasserted, the relay does not measure the frequency because the voltage signal is missing or is non-periodic. When no frequency measurement is available, the relay uses the nominal frequency given by the NFREQ setting.

11. Line Monitoring

With reference to *Figure G.14*, the SEL-T400L line monitor represents a two-terminal power line with 0.25 mi intervals (or 0.25 km intervals depending on the LLUNIT setting). The line monitor assigns a bin to each of the intervals and marks each bin with the midpoint location of the corresponding interval, such as 0.25, 0.50, 0.75, and so on. Except for the first bin and the last bin, a bin marked as L covers event locations from (L – 0.125) to (L + 0.125). Each bin has a counter associated with it to count events located within that bin. The counter range is from 0 to 255. When the counter reaches its upper limit, it is not incremented anymore but will remain at 255 until it is cleared by the user.

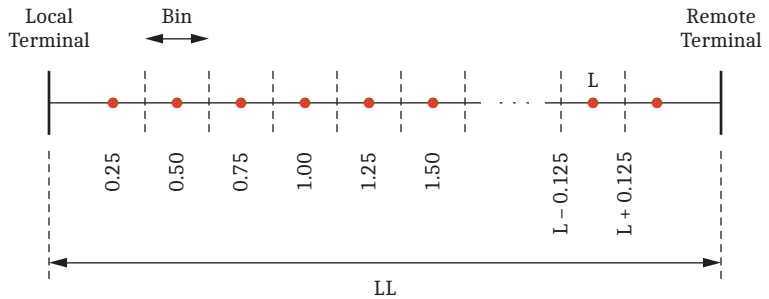

Figure G.14 Power Line Divided Into Bins for Counting Line Events

When the line monitor detects an event on the line and obtains a valid event location M (mi or km) from the double-ended traveling-wave fault-locating method, it determines the bin for location M and increments the counter associated with that bin.

The line monitor triggers for two types of events: low-energy events and faults. The line monitor defines a low-energy event as an event that asserts the traveling-wave fault detector, (TWDD, see *Traveling-Wave Disturbance Detectors on page 2.12*) at the local line terminal, which leads to calculating a valid event location, but is not accompanied by the fault locator trigger (SEL-T400L trip command or a trip command from another relay configured under the FL setting). The absence of the fault locator trigger signifies that neither the SEL-T400L nor the redundant protection system operated for that event, and therefore the event is not a fault but a low-energy transient event. Expect low-energy events to be fault precursors such as a discharge across a dirty or defective insulator, incipient cable fault, discharge due to encroaching vegetation, ionized air with airborne soot from a fire underneath the line conductors, coupling from a lightning strike to the ground wires, and similar fault precursors. To refrain from tabulating external events when calculating the event location without the fault locator trigger, the line monitor logic determines if the polarities of the traveling waves at both line terminals are the same (both positive or both negative) and consistent with the prefault voltage polarity (the voltage polarity check is pending). To avoid false alarms due to noise coupled to the control cables in the substation, the line monitor uses the EMI monitoring logic outputs (see *Traveling Waves on page G.4*) and

requires the SEL-T400L arming logic to be asserted (see *Arming Logic on page 2.8*). *Figure G.15* shows the simplified diagram of the supervisory logic for the line monitor.

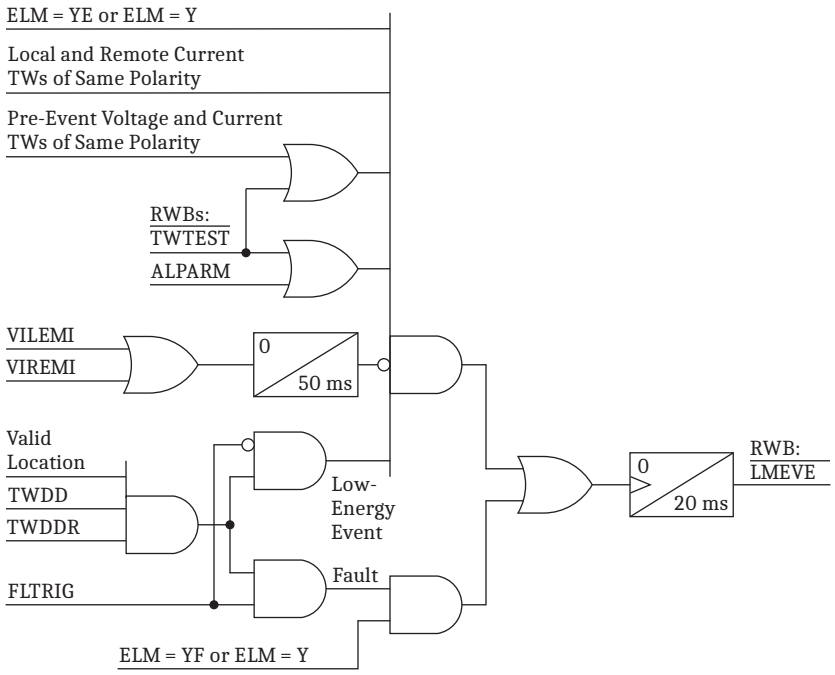

Figure G.15 Supervisory Conditions of the Line Monitor Trigger

The line monitor defines a high-energy event or a fault as an event that asserts traveling-wave fault detectors at both line terminals, which leads to calculating a valid event location, and is followed by a fault locator trigger, FLTRIG (see *Figure 4.3 on page 4.6*).

Using the line monitor enable setting, you can set the line monitor to trigger on low-energy events only, on faults only, or on both faults and low-energy events. Triggering on low-energy events focuses the line monitor on fault precursors, and therefore it concentrates the application on potential faults. Triggering on faults focuses the line monitor on fault-caused line outages and provides a line fault history for the duration of the installation. Triggering on both low-energy events and faults provides a composite picture of the weak spots on the line: potential faults and distribution of faults that already occurred.

The line monitor compares the values of all the counters with the user-defined alarm threshold. It performs the comparison starting from the first bin adjacent to the local terminal. The first bin that exceeds the alarm threshold sets the alarm. The assertion of the LMA Relay Word bit signifies the alarm, and the LMLOC analog value contains the alarm location (in LLUNITs). You should examine the event counters for the entire line by using the **LIMO** command or the LINEMON.TXT file to better understand the alarm and determine if other weak spots are present on the line.

An event repeating at the same location may yield event location results with an error on the order of one line monitoring bin. Therefore, it is possible that a recurring event at a single location will increment three adjacent counters. *Figure G.16* illustrates this phenomenon. To address the potential spread in the event location results for a recurring event at the same location, the line monitor alarms for bin n if the sum of counters in bins $n - 1$, n, and $n + 1$ exceeds the threshold, and if the value of the counter in bin n is the highest among the $n - 1$, n, and $n + 1$ counters.

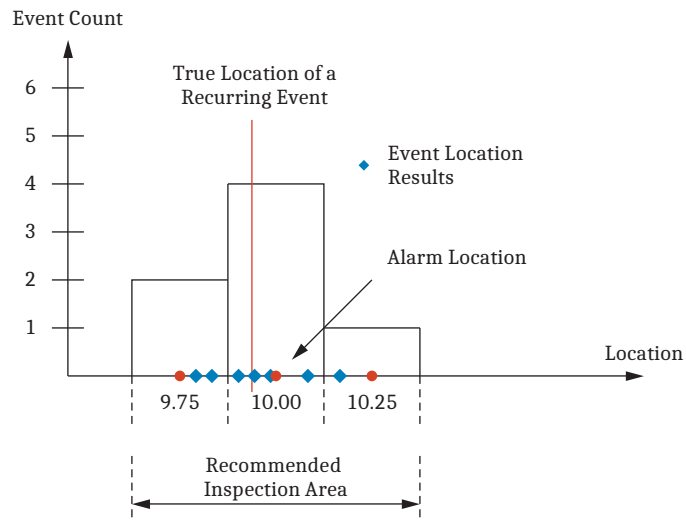

Figure G.16 Event Location Spread Causes Event Counting in Three Adjacent Bins

A tapped line can connect loads that are routinely switched, such as a tapped transformer that is periodically connected or disconnected, or a transformer with an on-load tap changer. Switching operations can generate traveling waves. Traveling waves launched from the tapped load appear as if originating from the tap. Routine switching would therefore drive up the counter for the tap location leading to a spurious alarm. Similarly, switching in-line series capacitors generates routine traveling waves.

The line monitor provides two blocking regions to prevent spurious alarms for tap and series capacitor locations or other locations that routinely generate traveling waves. *Figure G.17* shows the blocking regions of the line monitor.

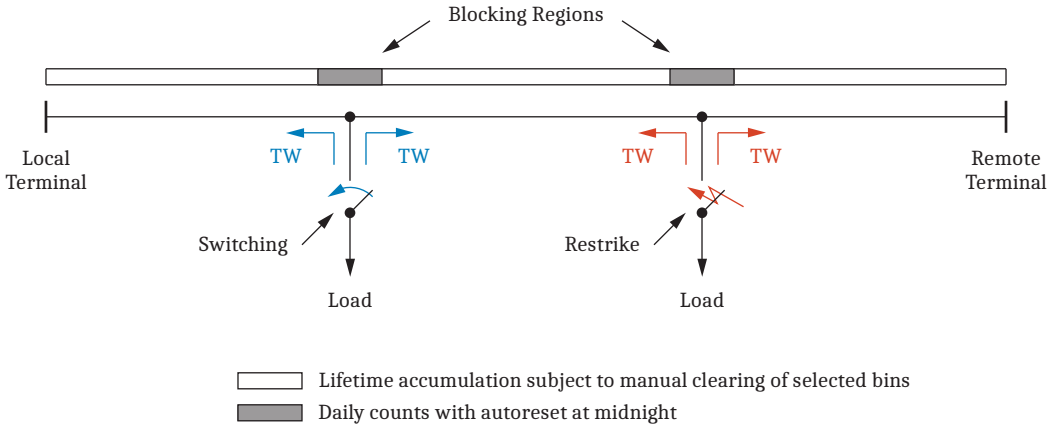

Figure G.17 Blocking Regions of the Line Monitor

The logic increments the counters within a blocking region as described earlier, but it resets them to zero at midnight on the relay clock. As a result, the counters monitor daily event totals for bins within the blocking regions. The line monitor provides separate alarm thresholds for the blocking regions. Use the blocking region alarm to detect excessive switching or restriking of a switching device at the tap location. The assertion of LMAB1 and LMAB2 Relay Word bits signifies the alarm for blocking regions 1 and 2, respectively, and the LMLOCB1 and LMLOCB2 analog values contain the alarm locations (in LLUNITs). You should

examine the counters for the entire line by using the **LIMO** command or the LINEMON.TXT file to better understand the alarm and determine if other weak spots are present on the line.

When testing the line monitor for low-energy events, you must either apply the voltage and current signals that result in assertion of the arming logic or use the TW test mode. Refer to the **TWTEST** command description in *Appendix C: SEL ASCII Commands* for information on how to initiate and terminate the TW test mode.

Refer to *Line Monitoring Logic on page 4.18* for more information on the application of the line monitor.

12. Event Playback

The built-in event playback feature replaces, in real time, the measured relay input ac voltages and currents with values from one of the test files stored in the relay memory. The test files contain all nine ac channels stored using the exact scaling and sampling rate as the analog-to-digital converter during normal relay operation. Use the Playback File Conversion Utility (see *Playback File Conversion Utility on page 11.41*) to prepare a test file from any compliant COMTRADE file, including but not limited to your SEL-T400L field records. The test file length must be between 0.1 s and 1.2 s. You can extract your test case from a COMTRADE file as long as 24 s.

Event playback only substitutes the relay ac voltages and currents with test values. The binary inputs, both contact inputs and MIRRORED BITS inputs, are not substituted with any test values and continue to operate normally. Similarly, the local relay does not substitute the remote voltages and currents received on Port 6. If you intend to test a protection scheme or logic involving multiple relays, you must generate these inputs independently. SEL recommends using the other relay in the scheme, connecting it to the relay under test, and executing event playback in both relays at the same time to apply appropriate test signals to both relays and let them interact as during normal in-service conditions.

Event playback allows you to either permit or inhibit the relay outputs during the playback test. You have individual control over contact outputs and MIRRORED BITS outputs. Inhibit the outputs if their operation is not required, especially when testing in-service relays. Allow the outputs to operate when testing protection schemes or logic.

Event playback applies the test values synchronously with its internal clock. The test starts exactly at the top of a second with applying one second of the pre-event steady-state condition. After this one-second period is over, playback continues with the transient data from the test file. The first sample of the test file is applied exactly at the top of a second (assuming that Time offset is zero).

The pre-event steady-state period allows the relay measurements, logic, and timers to stabilize. This approach emulates conditions similar to normal relay operation during power system events. You do not need to provide one second of pre-event steady-state data in the input COMTRADE file. The event playback feature loops one cycle of pre-event steady-state data for one second. The looping feature in the relay works based on data that the Playback File Conversion Utility embeds in the test file. You must provide at least 50 ms of true steady-state data in the input COMTRADE file to allow for calculation of the pre-event steady-state parameters. The looping is not optional and it applies each time proper pre-event steady-state data is present in the input COMTRADE file. If your input COMTRADE file does not contain pre-event steady-state data, your test file will

be executed without the one-second looping starting with the first sample in the test file at the top of a second, provided that the test file duration is 300 ms or longer.

The relay processing intervals occur every 0.1 ms. Power system events such as faults occur at random times as compared with the processing times of the relay. To simulate this random alignment of a power system event with respect to the relay processing times, the event playback feature allows you to set a time offset between the top of a second and the first sample in the test file. The time offset range is 0–99 µs. By shifting the power system event by a fraction of the processing interval during playback, you simulate a different time of that event with respect to the internal processes of the relay. Use this advanced feature to measure the spread in operating times by repeating the same test several times with different values of the offset time.

Event playback allows you to store as many as five test files in the relay memory. When executing a test, you can select one of these files and trigger the test either manually or based on relay time. When triggered, the event playback control logic in the relay copies the data from the nonvolatile relay memory to RAM in preparation for playback. This operation may take tens of seconds to several minutes depending on the length of the test file. The relay indicates the pending playback on its HMI display, including user-selected options for the outputs, the selected test file, and a countdown timer. When the data transfer is complete, the test starts at the top of a second (plus the optional time offset). When triggered in manual mode, the test starts immediately at the next top of a second. When triggered in time-based mode, the test starts at the top of the second of the scheduled test time. Time-based triggering is intended for end-to-end testing of multiple relays; therefore, the relay accepts a time-based trigger only when the relay clock is synchronized to absolute time or the remote relay over the Port 6 link.

When you issue a playback trigger, the relay asks you to confirm or cancel your test intent by pressing a pushbutton on the front panel. This security feature prevents unintentional or malicious usage of event playback on in-service relays. If you confirm your test intent, your confirmation is valid for one hour and you can execute a test session without having to acknowledge each test case.

Event playback testing is signaled with Relay Word bits, PLAYP, PLAY, and PLAYR.

Upon accepting a test trigger, the relay asserts the PLAYP Relay Word bit (playback pending). This bit is asserted when the relay copies the test data to RAM and waits for the top of a second to start the test. When the PLAYP bit is asserted, the relay continues to operate normally while processing data from the analog-to-digital converter.

The PLAY Relay Word bit (playback in progress) asserts when the test data is applied in place of the actual ac voltage and current inputs. This includes the one-second pre-event looping followed by playing back the signals from the test file. The PLAY bit deasserts after the last sample of the test data has been played back.

If you select to inhibit the relay contact outputs or MIRRORED BITS outputs during the test, these outputs are forced to logical 0, regardless of their pre-test value, from the assertion of the PLAY bit to 50 ms plus TDURD after the PLAY bit deasserts.

If the direct fiber channel is in use on Port 6, the PLAY Relay Word bit of the remote relay is available locally as PLAYR.

The relay asserts its alarm output if PLAYP or PLAY is asserted.

Invalid incremental quantities are created when switching from actual ac voltages and currents to test ac voltages and currents, and vice versa. To prevent assertion of relay logic for these transitions, the Arming logic marks the incremental quantities as invalid after the rising- and falling-edge transitions of the PLAY bit. Other features are also inhibited during these transitions, such as the event recorder and fault locator.

SEL provides software tools for preparing test files, managing test files in the relay memory, executing playback tests, and inspecting test results (see *Figure G.18*). These tools are integrated in ACSELERATOR QuickSet SEL-5030 Software (see *Playback File Conversion Utility on page 11.41*). You can also manage the files using standard FTP tools and execute the tests using the SEL ASCII **PLAY** command.

Refer to *Section 11: Testing and Commissioning* for step-by-step instructions on how to use the event playback feature.

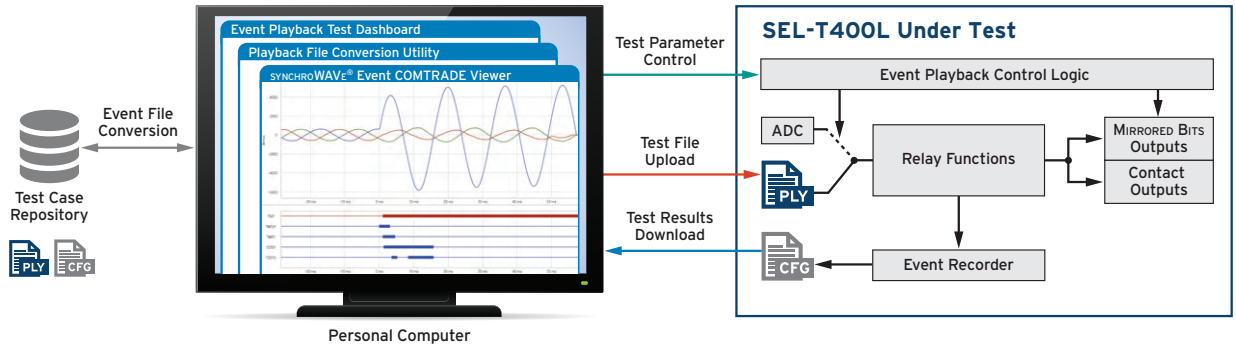

Figure G.18 Event Playback Overview and Workflow

This page intentionally left blank

APPENDIX H

High-Accuracy Timekeeping

The SEL-T400L Relay determines time from several sources, including IRIG-B, a remote relay communicating via the direct point-to-point fiber-optic channel on Port 6, the battery-backed real-time clock, a DNP Master connected to Ethernet Port 5, and the **TIME** and **DATE** commands. Some of these sources provide only an approximate measure of time. For high-accuracy time synchronization, which is needed when using an IEEE C37.94 multiplexed channel for double-ended TW-based fault locating and to support analysis of system-wide events, you must connect the relay to an accurate time source, such as an IEEE C37.118-compliant satellite clock. The SEL-T400L only accepts high-accuracy IRIG-B signals with C37.118 extensions and performs all timekeeping functions in terms of Coordinated Universal Time (UTC). This allows aggregation and analysis of system-wide events without the need to know the time zone or local daylight-saving time conventions.

The SEL-T400L Relay maintains time based on the following time sources:

- Local relay IRIG-B input
- Remote relay time through use of a direct point-to-point fiber-optic channel on Port 6 (based on the remote relay IRIG-B input)
- Local oscillator (Free Running mode)
- Battery-backed real-time clock

IRIG-B Time Input

In order to provide for submicrosecond time accuracy, you must connect the SEL-T400L IRIG-B input to a high-accuracy time source.

The SEL-T400L determines the preliminary suitability of the IRIG-B signal by applying the following tests. It asserts Relay Word bit TIRIG only when these tests are met:

- The seconds, minutes, and days fields are in range.
- The time from two consecutive messages differs by 1 second, except for leap second or daylight-saving time transitions.
- The signal contains the correct parity bit.

If the SEL-T400L deems the IRIG-B signal suitable, it then determines the suitability of the IRIG-B signal for high-accuracy timekeeping by applying additional tests and asserts Relay Word bit BNC_OK only when these tests are met:

- The jitter between positive transitions (rising edges) of the clock signal is less than 500 ns.
- The IRIG-B signal contains the C37.118 extension bits.
- The time-error information contained in the IRIG-B C37.118 extension field indicates time error is less than 10 µs.

If the relay is in high-accuracy mode and either of the two tests fails, the relay enters a holdover mode. When in holdover mode, the relay keeps the TSOK and BNC_OK bits asserted, and deasserts TIRIG. The relay remains in holdover mode for as long as 15 seconds, and it then reverts to either high-accuracy IRIG-B or the internal-clock-based Free Running mode, depending on conditions.

The relay accepts C37.118 IRIG-B signals with either odd or even parity. When an IRIG-B signal is connected, the relay detects whether the signal has odd or even parity and continues to check received IRIG-B messages for that parity. If a message is received with the opposite parity or no parity, the signal fails the parity test. If your clock has programmable parity and the parity is changed, the relay disqualifies the IRIG-B signal for a few seconds until it can confirm that the parity change did not result from a corrupt message.

See *Table H.1* for SEL-T400L timekeeping mode details.

Table H.1 SEL-T400L Timekeeping Modes and Sources

Clock Source	Timekeeping Mode	SEL-T400L Clock Accuracy	Relay Word Bits
No External Source	Free Running	Depends on last method of setting or synchronization[a]	TIRIG = 0 BNC_OK = 0 TSOK = 0
Low-Accuracy IRIG	Free Running	Time source not used[b] Accuracy depends on last method of setting or synchronization[a]	TIRIG = 1 BNC_OK = 0 TSOK = 0
High-Accuracy IRIG (With C37.118 Extensions)	HIRIG	<100 ns plus external clock error[b]	TIRIG = 1 BNC_OK = 1 TSOK = 1
Remote Relay Via Port 6	Remote Free Running, Remote HIRIG	<100 ns relay-to-relay plus external clock error[b]	TIRIG = 0 or 1[c] BNC_OK = 0 or 1[c] TSOK = 1

[a] The SEL-T400L internal clock is either synchronized via a direct IRIG-B connection or set using the TIM command or a DNP Master connected to Ethernet Port 5.

[b] The time source must include the IEEE C37.118 IRIG-B control bit assignments to provide the time-error estimate for the clock and must report an accuracy of <10 μs.

[c] Reported Relay Word bit states reflect IRIG signal availability on the local relay.

The IRIG signal carries the time-source time quality encoded on the four-bit Time Quality indicator code defined in the IEEE C37.118-2005 standard. The relay places the raw time quality information from the IRIG-B signal into Relay Word bits TQUAL1, TQUAL2, TQUAL3, and TQUAL4. See *Table H.2* for time quality Relay Word bit decoding. The SEL-T400L Relay rejects (does not use) time sources with a reported accuracy worse than 10 μs. Issue the **TIM Q** command to see the local relay IRIG source time quality. If a relay is synchronized to the IRIG source of a remote relay over the direct point-to-point fiber-optic channel on Port 6 (Time Source = Remote HIRIG), the time quality of the local IRIG source is not displayed.

Table H.2 IRIG Signal Time Quality Encoding Per IEEE C38.118-2005

IRIG Clock Accuracy	TQUAL4	TQUAL3	TQUAL2	TQUAL1	TIM Q Command Response
Clock failure, time not reliable	1	1	1	1	>99,999 µs
Within 10 seconds	1	0	1	1	>99,999 µs
Within 1 second	1	0	1	0	>99,999 µs
Within 100 milliseconds	1	0	0	1	>99,999 µs
Within 10 milliseconds	1	0	0	0	10,000 µs
Within 1 millisecond	0	1	1	1	1,000 µs
Within 100 microseconds	0	1	1	0	100 µs
Within 10 microseconds	0	1	0	1	10 µs
Within 1 microsecond	0	1	0	0	1 µs
Within 100 nanoseconds	0	0	1	1	0.1 µs
Within 10 nanoseconds	0	0	1	0	0.01 µs
Within 1 nanosecond	0	0	0	1	0.001 µs
Clock Synchronized	0	0	0	0	0.000 µs

SEL-T400L also decodes Leap Second Pending, Leap Second Direction, Daylight-Saving Time Pending, and Daylight-Saving Time control bits that are present in the IRIG-B signal. The status of these control bits is reflected in Relay Word bits LPSECP, LPSEC, DSTP, and DST, respectively. *Table H.3* shows the full list of Relay Word bits related to the SEL-T400L timekeeping system.

Table H.3 Relay Word Bits Associated With Precision Timekeeping System

RWB Name	Description
TIRIG	Relay receives a valid IRIG-B signal
BNC_OK	High-accuracy IRIG-B signal from BNC port is available
TSOK	Relay clock is synchronized with high accuracy to the absolute time
DST	Daylight-saving time active[a]
DSTP	Daylight-saving time change pending[a]
LPSEC	Leap second direction; add one second if deasserted, delete if asserted
LPSECP	Leap second pending
TQUAL4	IRIG time quality Bit 4
TQUAL3	IRIG time quality Bit 3
TQUAL2	IRIG time quality Bit 2
TQUAL1	IRIG time quality Bit 1

[a] The DST and DSTP Relay Word bits are decoded and shown for reference only. The SEL-T400L uses UTC and does not follow daylight-saving time or local time offset.

Use the **TAR** command to inspect the timekeeping Relay Word bits. Connect a high-accuracy IRIG-B signal to the relay, wait at least 20 seconds for the SEL-T400L to acquire the clock signal, and then issue the **TAR TIRIG <Enter>** command. The relay will return one row from the Relay Word, as shown in *Figure H.1*.

```
=>>TAR TIRIG <Enter>

TIRIG    BNC_OK   TSOK     *        *        *        *        *
1        1        1        0        0        0        0        0
```

Figure H.1 Confirming the High-Accuracy Timekeeping Relay Word Bits

Use the same method to inspect the TQUAL bits by issuing the **TAR TQUAL1 <Enter>** command.

When the TIRIG, BNC_OK, and TSOK Relay Word bits are asserted (logical 1), the local relay is in high-accuracy IRIG timekeeping mode. If BNC_OK is not asserted, but TIRIG is asserted, the relay is receiving a substandard IRIG signal. The following are possible reasons for not enabling the high-accuracy timekeeping mode:

- The IRIG-B clock does not provide the IEEE C37.118 Control Bit extensions.
- The IRIG-B signal 100 Hz edge jitter is too high (>500 ns).
- The termination resistor, required by some IRIG clocks, is not installed (see *IRIG-B Input Connection on page 10.16* for more information).
- The time source is reporting a time error ≥10 µs.
- The time source (if it is a satellite-synchronized clock) is not connected to an antenna.

If neither BNC_OK nor TIRIG is asserted, the relay is unable to understand the IRIG time source. The following are possible reasons for not recognizing the IRIG signal:

- The IRIG-B signal is not connected to the relay.
- The IRIG-B clock signal is not of sufficient strength or is improperly configured.
- The termination resistor, required by some IRIG clocks, is not installed.

Timekeeping When Using Port 6 Channel

When two SEL-T400L Relays are connected to each other via the direct point-to-point fiber-optic channel on Port 6, the high-accuracy timekeeping system ensures synchronization of the internal clocks of the two relays. The relays also remain synchronized to one of the IRIG-B sources available in either of the substations. This operating mode provides IRIG source redundancy and ensures that the two relays remain synchronized to each other at all times (regardless of IRIG source availability).

When connected to each other via the point-to-point fiber-optic channel, the two relays form a master-slave time synchronization bond. The relay with access to a high-accuracy time source synchronizes to it, becoming the master, and the other relay voluntarily enters the slave mode. In cases when both or neither of the relays have access to a high-accuracy time source, the relay with the lower 87TADR transmit address value becomes the slave. The synchronization chain is always linear, with the master relay synchronizing to the external high-accuracy time source and the slave relay synchronizing to the master. Both relays remain synchronized to each other regardless of the external time source availability, and

can seamlessly exchange the master and slave roles if the master loses access to its high-accuracy time source while the slave has access to a high-accuracy time source.

The timekeeping system is designed so that the external time sources do not affect the protection elements. The analog-to-digital converter sampling clock period never differs by more than ±8 ns from the nominal 1 µs period. Enforcement of the stated limits (and therefore elimination of the potential for adverse side effects) comes from hardware and is independent from the relay firmware.

Inspecting the Timekeeping System

The TSOK Relay Word bit indicates that the relay is locked to a high-accuracy IRIG source. The source may be available locally, or remotely if the two relays are connected to each other via the point-to-point fiber-optic channel on Port 6.

The green **TSOK** LED indicates the status of relay time synchronization with respect to absolute time provided by an external time source (see *Relay Time Synchronization Status on page 8.13* for more information on the **TSOK** LED target).

TIME Q Report

Issue the **TIM Q** command to determine which time source is in use and to display its time quality, as shown in *Figure H.2*.

```
COMMON REPORT HEADER

UTC: xx:xx:xx
UTC Offset:  x.xx hrs

Time Source: b
Last Update Source: b

Last Update Time: xx:xx:xx  xxxx/xx/xx

IRIG Time Quality: x.xxx us
```

Figure H.2 Data Items in the TIM Q Report

```
SEL-T400L                                   Date: 2017/03/10  Time: 01:56:18.171
Station A                                   Time Source: HIRIG
                                            Serial Number: 1170231369

FID=SEL-T400L-R100-V0-Z001001-D20170321     CID=FB54

UTC: 01:56:18
UTC Offset: 0.00 hrs

Time Source: HIRIG
Last Update Source: HIRIG

Last Update Time: 01:56:18  2017/03/10

IRIG Time Quality: 0.000 us
```

Figure H.3 Sample TIME Q Report

In the example shown in *Figure H.3*, the local relay is connected to a high-accuracy IRIG time source (HIRIG); the last updated time source is also HIRIG; the UTC offset (necessary to convert the SEL-T400L UTC time stamps to local time) is 0; and the IRIG signal time quality is better than 0.1 µs (typical of high-accuracy time reported by a satellite-synchronized clock). *Table H.4* explains the TIME Q report data items and provides applicable troubleshooting guidelines.

Table H.4 Information Included in the TIME Q Report

Data Item	Description	Comments and Troubleshooting
UTC	Time (in UTC) captured when the command was processed	The SEL-T400L Relay uses Coordinated Universal Time (UTC) only. Time information is obtained using the IRIG-B C37.118 extension field. UTC allows for easy collection and warehousing of system-wide events without there being a need to know time zone or local daylight-saving time conventions.
UTC Offset	UTC offset captured when the command was processed	This is the offset between UTC and the local time. Offset is supplied by the IRIG source and contained in the C37.118 extension field. Add this offset to the UTC time stamp to obtain the local time.
Time Source	Time synchronization mode Possible modes: Free Running, HIRIG, Remote Free Running, and Remote HIRIG	If Time Source is HIRIG or Remote HIRIG, the relay clock is locked to a high-accuracy external time source. If Time Source is Free Running, the relay is relying on its internal oscillator and is likely to drift away from the accurate absolute value. Consider making a note of the actual time when you capture a report. If the Time Source is not HIRIG while a functioning time source is connected to the IRIG input (i.e., the relay does not consider the time source to be a high-accuracy source), inspect the Time Quality field to gather more information about the time source problem. Consider using a DNP Master or the **TIM** command to set the relay clock when an IRIG time source is not available. **Note:** If the point-to-point fiber-optic channel is available on Port 6, the local relay may operate in Remote Free Running mode with time sourced by the internal oscillator of the remote relay or in the Remote HIRIG mode by using the high-accuracy external time source connected to the remote relay.
Last Updated Source	Name of the last time synchronization source	The Last Updated Source field displays the last synchronization time source. *Table H.5* lists possible sources.
Last Updated Time	Time of the last synchronization event	This field displays the time when the internal time system was last referenced to a particular source.
IRIG Time Quality	Time quality reported by the IRIG-B source	This field displays local IRIG-B source time quality information extracted from the C37.118 extension field. *Table H.2* describes Field encoding. **Note:** IRIG Time Quality is displayed only if the Time Source is HIRIG.

Table H.5 Last Updated Sources

Source Name	Time Source Description
HIRIG	High-accuracy IRIG input signal.
REMOTE RELAY	Time set from remote relay via direct point-to-point fiber-optic channel on Port 6.
ASCII DATE	Date set using **DAT** command.
ASCII TIME	Time set using **TIM** command.
DNP	Time set using DNP Master.
NONV CLK	Nonvolatile clock, set at some point in the past. Accuracy and origin of the time is unknown since relay turned on.
NEVER SET	Applies in cases of a nonfunctioning real-time clock (typically because of an expired battery or a clock chip failure). If the real-time clock was never set, time reverts to the year 2000.

APPENDIX I

Distributed Network Protocol

The SEL-T400L is a Distributed Network Protocol (DNP3) Level 2 server (outstation device and protocol). This allows a DNP3-compliant SCADA master to access metering data, Relay Word bit status, diagnostics, and fault summary data.

The SEL-T400L allows six DNP3 sessions, each with custom data mapping, analog deadbands, and other characteristics. *Table I.1* summarizes the SEL-T400L DNP3 capabilities.

The SEL-T400L does not allow the DNP3 master to control the relay outputs. The DNP3 binary output control allows resetting relay targets, resetting DNP3 event data, and loading DNP3 event data.

This Appendix uses the terms inputs and outputs from the DNP3 master perspective, not from the SEL-T400L server perspective.

Table I.1 Summary of the SEL-T400L DNP3 Capabilities

Feature	Application
Event data	Report data either unsolicited or on an event request
Deadbands	Apply analog deadbands independently for each DNP session on a per point basis
Sequence-of-events data	Log binary input state changes with time stamps of occurrence
Custom mapping	Select data for each session
Acknowledgment and reset	Reset front-panel targets; reset DNP event summary data and load event summary information
Time synchronization	Set the relay time from the master or request time synchronization from the master
Object 0 device attributes	Provide device attributes (Device ID, number of binary and analog points, manufacturer information, etc.) for the active session
TEST DB2 command	Test the DNP3 protocol interface by forcing analog and binary points

The DNP3 Device Profile document (available on the supplied CD or as a download from https://selinc.com/products/T400L/docs/) contains the standard device profile information for the SEL-T400L. Refer to this document for complete information on DNP3 implementation in the SEL-T400L.

DNP3 Configuration

DNP3 Connection Settings

Table 9.2 on page 9.3 shows the Port 5 settings required to establish a DNP3 connection to the SEL-T400L. These settings are common to all DNP3 sessions. This section provides the DNP3 protocol settings and shows the data items available for mapping.

DNP3 Protocol Settings

The SEL-T400L allows six DNP3 sessions to communicate with six separate DNP3 masters. Each session defines the SEL-T400L DNP3 server operation for the connected DNP3 master. *Table I.2* lists the DNP3 master settings for programming each session. You can set each session to use one of the five available maps, each of which has a default data set and is also customizable.

Table I.2 DNP Master Settings (Sheet 1 of 2)

Setting	Description	Range	Default
Ethernet DNP3 Master *n* Configuration, *n* = 1 to Value of EDNP Setting, Maximum 6			
DNPIP*n*	DNP Session Master IP Address	w.x.y.z (w: 1–126, 128–233, x: 0–255, y: 0–255, z: 0–255)	192.168.1.(*n* + 2)
DNPTR*n*	DNP Session Transport Protocol	UDP, TCP	TCP
DNPUDP*n*[a]	DNP UDP Response Port	REQ, 1–65534	20000
REPADR*n*	DNP Address to Report to	0–65519	1
DNPMAP*n*	DNP Session Map	1–5	1
CLASSB*n*	Class for Binary Event Data	OFF, 1–3	1
CLASSA*n*	Class for Analog Event Data	OFF, 1–3	2
TIMERQ*n*	Minutes for Request Interval	I, M, 1–32767 minutes	I
DECPLA*n*	Currents Scaling Decimal Places	0–3	1
DECPLV*n*	Voltages Scaling Decimal Places	0–3	1
DECPLM*n*	Misc Data Scaling Decimal Places	0–3	1
STIMEO*n*	Select/Operate Time-Out	0.0–30.0 seconds	1.0
DNPINA*n*[b]	Seconds to Send Data Link Heartbeat	0–120 seconds	20
DNPCL*n*	Enable Control Operations	Y, N	N
AIVAR*n*	Analog Input Default Variation	1–6	2
ANADBA*n*	Amps Reporting Deadband Counts	0–32767	100
ANADBV*n*	Volts Reporting Deadband Counts	0–32767	100
ANADBM*n*	Misc Data Reporting Deadband Counts	0–32767	100
ETIMEO*n*	Event Message Confirm Time-Out	1–50 seconds	2
UNSOL*n*	Enable Unsolicited Reporting	Y, N	N
PUNSOL*n*[c]	Enable Unsolicited Reporting at Power-Up	Y, N	N
NUMEVE*n*[c]	Number of Events to Transmit On	1–200	10
AGEEVE*n*[c]	Age of Oldest Event to Transmit On	0–99999 seconds	2
URETRY*n*[c]	Unsolicited Message Max Retry Attempts	2–10	3
UTIMEO*n*[c]	Unsolicited Message Offline Time-Out	2–5000 seconds	60
MINDIST*n*	Minimum Fault Location to Capture	OFF, –10000.0 to 10000.0	OFF

Table I.2 DNP Master Settings (Sheet 2 of 2)

Setting	Description	Range	Default
MAXDIST*n*	Maximum Fault Location to Capture	OFF, –10000.0 to 10000.0	OFF
EVEMOD*n*	Event Mode	SINGLE, MULTI	SINGLE
RPEVTYP*n*	Event Report Type	TRIP, ALL	ALL

[a] Not applicable and not accessible if DNPTR*n* = TCP.
[b] Not applicable and not accessible if DNPTR*n* = UDP.
[c] Not applicable and not accessible if UNSOL*n* = N.

Data Maps

Default Data Map

NOTE: If the deadband value is changed via Object 34 write, this value is stored in the volatile memory of the relay. A relay restart will reset this value.

NOTE: Voltage and current values in the analog inputs are in kilovolts and amperes, respectively.

Table I.3 shows the SEL-T400L DNP3 data map settings. *Table I.4* shows the default data map. Use the custom DNP3 mapping to create the map required for your application.

Table I.3 DNP Map Settings

Setting	Description	Range	Default
Binary Input Map			
BI_*xxx*[a]	BI_*xxx*[a] DNP Binary Input	Relay Word bits (see *Appendix D*) and dedicated DNP3 inputs (RLYDIS, STFAIL, STWARN, STSET, UNRDEV, NUNREV)	see *Table I.4*
Binary Output Map			
BO_0*xx*[b]	BO_0*xx*[b] DNP Binary Output	Dedicated DNP3 outputs (DRST_TAR, DRSTDNPE, NOOP, NXTEVE)	see *Table I.4*
Analog Input Map			
AI_*xxx*[c]	AI_*xxx*[c] DNP Analog Input	DNP3 analog quantities (see *Table E.1* and *Table E.3*)	see *Table I.4*

[a] *xxx* = 000–199.
[b] *xx* = 00–02.
[c] *xxx* = 000–119.

Table I.4 DNP3 Default Data Map (Sheet 1 of 3)

Object	Default Index	Label	Description
Binary Inputs			
01, 02	0	RLYDIS	Relay disabled
01, 02	1	TRIPLED	TRIP target LED is illuminated
01, 02	2	STFAIL	Relay diagnostic failure
01, 02	3	STWARN	Relay diagnostic warning
01, 02	4	STSET	Settings change or relay restart
01, 02	5	SALARM	Software alarm
01, 02	6	HALARM	Hardware alarm

Table I.4 DNP3 Default Data Map (Sheet 2 of 3)

Object	Default Index	Label	Description
01, 02	7	BADPASS	Invalid password attempt alarm
01, 02	8	UNRDEV	An unread relay event is available
01, 02	9	LOP	Loss-of-potential condition
01, 02	10	OPA	Pole A open
01, 02	11	OPB	Pole B open
01, 02	12	OPC	Pole C open
01, 02	13	ROKP1	Mirrored Bits Port 1 operating correctly
01, 02	14	ROKP2	Mirrored Bits Port 2 operating correctly
01, 02	15	ROKP3	Mirrored Bits Port 3 operating correctly
01, 02	16	TW87OK	Relay receives time synchronized data over Port 6
01, 02	17	FREQOK	Frequency measurement is locked and accurate
01, 02	18	PULSE	Asserts when you use the SEL ASCII **PULSE** command to test relay outputs
01, 02	19	TSOK	Relay clock is synchronized with high accuracy to the absolute time
01, 02	20	ARMED_G	ARMED target LED is green
01, 02	21	ARMED_Y	ARMED target LED is yellow
01, 02	22	ARMED_R	ARMED target LED is red
01, 02	23	IN101	Input IN101 asserted
01, 02	24	IN102	Input IN102 asserted
01, 02	25	IN103	Input IN103 asserted
01, 02	26	IN104	Input IN104 asserted
01, 02	27	BLK	BLK contact input asserted
01, 02	28	TPA	Phase A trip
01, 02	29	TPB	Phase B trip
01, 02	30	TPC	Phase C trip
Binary Outputs			
10, 12	0	DRSTDNPE	Reset (clear) DNP Event Summary registers
Analog Inputs			
30, 32	0	IA	Line current, magnitude, Phase A
30, 32	1	IAFA	Line current, angle, Phase A
30, 32	2	IB	Line current, magnitude, Phase B
30, 32	3	IBFA	Line current, angle, Phase B
30, 32	4	IC	Line current, magnitude, Phase C
30, 32	5	ICFA	Line current, angle, Phase C
30, 32	6	VA	Line voltage, magnitude, Phase A
30, 32	7	VAFA	Line voltage, angle, Phase A
30, 32	8	VB	Line voltage, magnitude, Phase B
30, 32	9	VBFA	Line voltage, angle, Phase B
30, 32	10	VC	Line voltage, magnitude, Phase C
30, 32	11	VCFA	Line voltage, angle, Phase C

NOTE: During playback testing, ARMED_G, ARMED_Y or ARMED_R binary inputs may toggle resulting in multiple DNP3 events.

Table I.4 DNP3 Default Data Map (Sheet 3 of 3)

Object	Default Index	Label	Description
30, 32	12	3I0	Line current, zero-sequence, magnitude
30, 32	13	3I0FA	Line current, zero-sequence, angle
30, 32	14	I1	Line current, positive-sequence, magnitude
30, 32	15	I1FA	Line current, positive-sequence, angle
30, 32	16	3I2	Line current, negative-sequence, magnitude
30, 32	17	3I2FA	Line current, negative-sequence, angle
30, 32	18	3V0	Line zero-sequence voltage, magnitude
30, 32	19	3V0FA	Line zero-sequence voltage, angle
30, 32	20	V1	Line positive-sequence voltage, magnitude
30, 32	21	V1FA	Line positive-sequence voltage, angle
30, 32	22	3V2	Line negative-sequence voltage, magnitude
30, 32	23	3V2FA	Line negative-sequence voltage, angle
30, 32	24	FREQ	System frequency
30, 32	25	FTYPE	Fault type
30, 32	26	FLOC	Fault location
30, 32	27	FIM	Maximum line fault current, magnitude
30, 32	28	FFREQ	System frequency at the time of the event
30, 32	29	FTIMEH	Event trigger time in DNP format (high 16 bits)
30, 32	30	FTIMEM	Event trigger time in DNP format (middle 16 bits)
30, 32	31	FTIMEL	Event trigger time in DNP format (low 16 bits)
30, 32	32	FUNR	Number of unread fault summary reports
30, 32	33	TEMP	Main board temperature

Configurable Data Maps

The SEL-T400L DNP3 implementation allows you to remap DNP3 data and, for analog values, specify per-point scaling, deadbands, and event class. For binary inputs, you can specify event class on a per-point basis. Use custom memory maps to organize data into a data subset optimized for your application. It is important to note that metering values from within the same memory map is time-coherent. The SEL-T400L uses object and point labels, rather than point indices, to streamline the remapping process. This enables you to quickly create a custom map without having to search for each point index in a reference map. *Table I.5* shows the SEL-T400L DNP reference data map. The SEL-T400L scales analog values by the indicated settings or fixed scaling values. Per-point scaling and deadband settings specified in a custom DNP3 map override defaults.

Table I.5 DNP3 Reference Data Map (Sheet 1 of 5)

Object	Label	Description
Binary Inputs		
01, 02	RLYDIS	Relay Disabled
01, 02	STFAIL	Relay Diagnostic Failure
01, 02	STWARN	Relay Diagnostic Warning
01, 02	STSET	Settings have changed or relay restarted

Table I.5 DNP3 Reference Data Map (Sheet 2 of 5)

Object	Label	Description
01, 02	UNRDEV	An event, as yet unread by DNP, exists
01, 02	NUNREV	An unread event exists, newer than the event in the Event Summary AIs
01, 02	Relay Word	Relay Word bit label (see *Appendix D: Relay Word Bits*)
Binary Outputs		
10, 12	DRST_TAR	Reset targets
10, 12	DRSTDNPE	Reset (clear) DNP Event Summary Registers
10, 12	NXTEVE	Load next event into DNP Event Summary registers
Analog Inputs[a]		
30, 32	FWREV[b]	Relay firmware version
30, 32	SNUMBH[b]	Relay serial number, highest 4 digits
30, 32	SNUMBL[b]	Relay serial number, lowest 4 digits
30, 32	SNUMBM[b]	Relay serial number, middle 4 digits
30, 32	EVNTCNT[b]	Counts events where the overcurrent supervision picks up
30, 32	TRPCNT[b]	Counts SEL-T400L trip events
30, 32	TEMP[c]	Main board temperature
30, 32	Iφ[d]	Line current, magnitude, Phase φ
30, 32	IφFA[e]	Line current, angle, Phase φ
30, 32	IφW[d]	Channel W current, magnitude, Phase φ
30, 32	IφWFA[e]	Channel W current, angle, Phase φ
30, 32	IφX[d]	Channel X current, magnitude, Phase φ
30, 32	IφXFA[e]	Channel X current, angle, Phase φ
30, 32	I1[d]	Line current, positive-sequence, magnitude
30, 32	I1FA[e]	Line current, positive-sequence, angle
30, 32	3I2[d]	Line current, negative-sequence, magnitude
30, 32	3I2FA[e]	Line current, negative-sequence, angle
30, 32	3I0[d]	Line current, zero-sequence, magnitude
30, 32	3I0FA[e]	Line current, zero-sequence, angle
30, 32	Vφ[f]	Line voltage, magnitude, Phase φ
30, 32	VφFA[e]	Line voltage, angle, Phase φ
30, 32	Vφφ[f]	Line phase-phase voltage, magnitude, Phase φφ
30, 32	VφφFA[e]	Line phase-phase voltage, angle, Phase φφ
30, 32	V1[f]	Line positive-sequence voltage, magnitude
30, 32	V1FA[e]	Line positive-sequence voltage, angle
30, 32	3V2[f]	Line negative-sequence voltage, magnitude
30, 32	3V2FA[e]	Line negative-sequence voltage, angle
30, 32	3V0[f]	Line zero-sequence voltage, magnitude
30, 32	3V0FA[e]	Line zero-sequence voltage, angle
30, 32	IφR[d]	Remote line current, magnitude, Phase φ
30, 32	IφRFA[e]	Remote line current, angle, Phase φ
30, 32	I1R[d]	Remote line positive-sequence current, magnitude

Table I.5 DNP3 Reference Data Map (Sheet 3 of 5)

Object	Label	Description
30, 32	I1RFA[e]	Remote line positive-sequence current, angle
30, 32	3I2R[d]	Remote line negative-sequence current, magnitude
30, 32	3I2RFA[e]	Remote line negative-sequence current, angle
30, 32	3I0R[d]	Remote line zero-sequence current, magnitude
30, 32	3I0RFA[e]	Remote line zero-sequence current, angle
30, 32	VφR[f]	Remote line voltage, magnitude, Phase φ
30, 32	VφRFA[e]	Remote line voltage, angle, Phase φ
30, 32	VφφR[f]	Remote line phase-phase voltage, magnitude, Phase φφ
30, 32	VφφRFA[e]	Remote line phase-phase voltage, angle, Phase φφ
30, 32	V1R[f]	Remote line positive-sequence voltage, magnitude
30, 32	V1RFA[e]	Remote line positive-sequence voltage, angle
30, 32	3V2R[f]	Remote line negative-sequence voltage, magnitude
30, 32	3V2RFA[e]	Remote line negative-sequence voltage, angle
30, 32	3V0R[f]	Remote line zero-sequence voltage, magnitude
30, 32	3V0RFA[e]	Remote line zero-sequence voltage, angle
30, 32	FREQ[e]	System frequency
30, 32	LMETOT[b]	Line monitoring total event count
30, 32	LMLOC[g]	Line monitoring alarm location
30, 32	LMLOCB1[g]	Line monitoring Blocking Region 1 alarm location
30, 32	LMLOCB2[g]	Line monitoring Blocking Region 2 alarm location
Event Summary Analog Inputs[a]		
30, 32	FTIMEH[b]	Event trigger time in DNP format (high 16 bits)
30, 32	FTIMEM[b]	Event trigger time in DNP format (middle 16 bits)
30, 32	FTIMEL[b]	Event trigger time in DNP format (low 16 bits)
30, 32	FTIMEH16[b]	Event trigger time in DNP format (high 16 bits), for 16-bit reads
30, 32	FTIMEM16[b]	Event trigger time in DNP format (medium 16 bits), for 16-bit reads
30, 32	FTIMEL16[b]	Event trigger time in DNP format (low 16 bits), for 16-bit reads
30, 32	FFREQ[e]	System frequency at the time of the event trigger
30, 32	FFTIMH[b]	Time of fault in DNP format (high 16 bits)
30, 32	FFTIMM[b]	Time of fault in DNP format (middle 16 bits)
30, 32	FFTIML[b]	Time of fault in DNP format (low 16 bits)
30, 32	FFTIMH16[b]	Time of fault in DNP format (high 16 bits), for 16-bit reads
30, 32	FFTIMM16[b]	Time of fault in DNP format (middle 16 bits), for 16-bit reads
30, 32	FFTIML16[b]	Time of fault in DNP format (low 16 bits), for 16-bit reads
30, 32	FTYPE[b]	Fault type
30, 32	FLOC[g]	Fault location (best result selected based on TW and impedance methods)
30, 32	FUNR[b]	Number of unread fault summary reports
30, 32	FIφMP[d]	Line prefault current, magnitude, Phase φ
30, 32	FIφAP[e]	Line prefault current, angle, Phase φ
30, 32	F3I2MP[d]	Line prefault current, negative-sequence, magnitude

Table I.5 DNP3 Reference Data Map (Sheet 4 of 5)

Object	Label	Description
30, 32	F3I2AP[e]	Line prefault current, negative-sequence, angle
30, 32	F3I0MP[d]	Line prefault current, zero-sequence, magnitude
30, 32	F3I0AP[e]	Line prefault current, zero-sequence, angle
30, 32	FVφMP[f]	Line prefault voltage, magnitude, Phase φ
30, 32	FVφAP[e]	Line prefault voltage, angle, Phase φ
30, 32	FIφRMP[d]	Remote line prefault current, magnitude, Phase φ
30, 32	FIφRAP[e]	Remote line prefault current, angle, Phase
30, 32	F3I2RMP[d]	Remote line prefault current, negative-sequence, magnitude
30, 32	F3I2RAP[e]	Remote line prefault current, negative-sequence, angle
30, 32	F3I0RMP[d]	Remote line prefault current, zero-sequence, magnitude
30, 32	F3I0RAP[e]	Remote line prefault current, zero-sequence, angle
30, 32	FVφRMP[f]	Remote prefault voltage, magnitude, Phase φ
30, 32	FVφRAP[e]	Remote prefault voltage, angle, Phase φ
30, 32	FIφM[d]	Line fault current, magnitude, Phase φ
30, 32	FIφA[e]	Line fault current, angle, Phase φ
30, 32	FIM[d]	Maximum line fault current, magnitude
30, 32	F3I2M[d]	Line fault current, negative-sequence, magnitude
30, 32	F3I2A[e]	Line fault current, negative-sequence, angle
30, 32	F3I0M[d]	Line fault current, zero-sequence, magnitude
30, 32	F3I0A[e]	Line fault current, zero-sequence, angle
30, 32	FVφM[f]	Line fault voltage, magnitude, Phase φ
30, 32	FVφA[e]	Line fault voltage, angle, Phase φ
30, 32	FIφRM[d]	Remote line fault current, magnitude, Phase φ
30, 32	FIφRA[e]	Remote line fault current, angle, Phase φ
30, 32	F3I2RM[d]	Remote line fault current, negative-sequence, magnitude
30, 32	F3I2RA[e]	Remote line fault current, negative-sequence, angle
30, 32	F3I0RM[d]	Remote line fault current, zero-sequence, magnitude
30, 32	F3I0RA[e]	Remote line fault current, zero-sequence, angle
30, 32	FVφRM[f]	Remote line fault voltage, magnitude, Phase φ
30, 32	FVφRA[e]	Remote line fault voltage, angle, Phase φ
30, 32	FZFLME[g]	Double-ended impedance-based fault location
30, 32	FZFLSE[g]	Single-ended impedance-based fault location
30, 32	FTWFLME[g]	Double-ended traveling-wave fault location
30, 32	FTWFLSE1[g]	Single-ended traveling-wave fault location 1
30, 32	FTWFLSE2[g]	Single-ended traveling-wave fault location 2
30, 32	FTWFLSE3[g]	Single-ended traveling-wave fault location 3
30, 32	FTWFLSE4[g]	Single-ended traveling-wave fault location 4
30, 32	FILTWH[b]	First local traveling-wave arrival time in DNP format truncated to the second (high 16 bits)
30, 32	FILTWM[b]	First local traveling-wave arrival time in DNP format truncated to the second (middle 16 bits)

Table I.5 DNP3 Reference Data Map (Sheet 5 of 5)

Object	Label	Description
30, 32	FILTWL[b]	First local traveling-wave arrival time in DNP format truncated to the second (low 16 bits)
30, 32	FILTWH16[b]	First local traveling-wave arrival time in DNP format truncated to the second (high 16 bits), for 16-bit reads
30, 32	FILTWM16[b]	First local traveling-wave arrival time in DNP format truncated to the second (middle 16 bits), for 16-bit reads
30, 32	FILTWL16[b]	First local traveling-wave arrival time in DNP format truncated to the second (low 16 bits), for 16-bit reads
30, 32	FILTWMS[b]	First local traveling-wave arrival time milliseconds (after top of second)
30, 32	FILTWUS[b]	First local traveling-wave arrival time microseconds (after top of second)
30, 32	FILTWNS[b]	First local traveling-wave arrival time nanoseconds (after top of second)
30, 32	FIRTWH[b]	First remote traveling-wave arrival time in DNP format truncated to the second (high 16 bits)
30, 32	FIRTWM[b]	First remote traveling-wave arrival time in DNP format truncated to the second (middle 16 bits)
30, 32	FIRTWL[b]	First remote traveling-wave arrival time in DNP format truncated to the second (low 16 bits)
30, 32	FIRTWH16[b]	First remote traveling-wave arrival time in DNP format truncated to the second (high 16 bits), for 16-bit reads
30, 32	FIRTWM16[b]	First remote traveling-wave arrival time in DNP format truncated to the second (middle 16 bits), for 16-bit reads
30, 32	FIRTWL16[b]	First remote traveling-wave arrival time in DNP format truncated to the second (low 16 bits), for 16-bit reads
30, 32	FIRTWMS[b]	First remote traveling-wave arrival time milliseconds (after top of second)
30, 32	FIRTWUS[b]	First remote traveling-wave arrival time microseconds (after top of second)
30, 32	FIRTWNS[b]	First remote traveling-wave arrival time nanoseconds (after top of second)

[a] φ = A, B, or C.
[b] Default scaling = 1 and miscellaneous deadband ANADBM.
[c] Default scaling = 10 and miscellaneous deadband ANADBM.
[d] Default current scaling DECPLA and deadband ANADBA.
[e] Default scaling = 100 and miscellaneous deadband ANADBM.
[f] Default voltage scaling DECPLV and deadband ANADBV.
[g] Default miscellaneous scaling DECPLM and deadband ANADBM.

You can use any of the five available DNP3 maps to exchange data with any DNP3 master. The SEL-T400L initially populates each map with default data points from the reference data map in *Table I.5*. You may remap the points in a default map to create a custom map from the points available in *Table I.5* with as many as:

- 200 binary inputs
- 3 binary outputs
- 120 analog inputs

NOTE: The SEL-T400L does not work with dual-point binary inputs or outputs.

NOTE: The SEL-T400L allows you to control three DNP3 binary outputs internal to the relay for resetting relay targets, resetting DNP3 event data, and loading the next new event via DNP3. You cannot control relay outputs via DNP3.

Use ACSELERATOR QuickSet SEL-5030 Software to easily remap binary inputs, binary outputs, and analog inputs. *Figure I.1* shows the QuickSet interface for mapping analog inputs. Double-click the mapped point to launch the interface shown in *Figure I.2* to assign scaling, deadband, and class for the selected point.

Using a terminal interface, the SEL ASCII **SET D *n*** and **SHOW D *n*** commands are also available to edit or view the n-th map in your application.

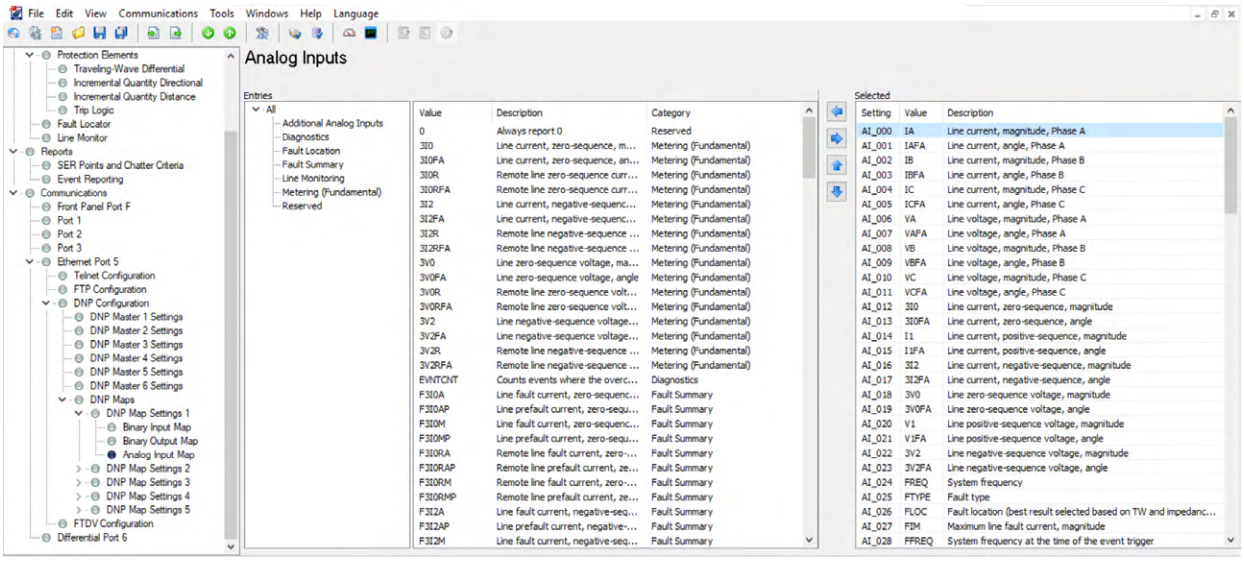

Figure I.1 Analog Input Map Entry Window in QuickSet

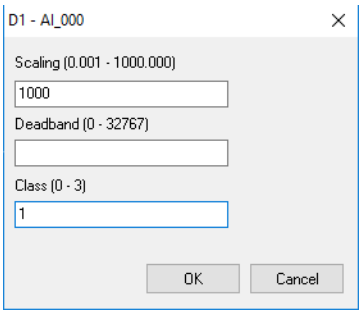

Figure I.2 Analog Input Scaling, Deadband, and Class Settings Window in QuickSet

QuickSet also provides interfaces for mapping binary inputs and outputs.

DNP3 Capabilities Overview

Data Access

Table I.6 summarizes methods of retrieving data via DNP3 from the least to most efficient and lists the associated DNP3 settings. The relay uses separate settings for each session. The settings names in this section include the session number *n* as a suffix ranging from 1 to 6 (for example, CLASSB1, UNSOL1, and PUNSOL1 are settings for Session 1). All settings with the same numerical suffix comprise the complete DNP3 session configuration.

Table I.6 DNP3 Access Methods

Access Method	Master Polling	Relay Settings[a]
Polled static	Class 0	Set CLASSB*n* and CLASSA*n* to OFF; set UNSOL*n* to N.
Polled report-by-exception	Class 0 occasionally; Class 1, 2, 3 frequently	Set CLASSB*n* and CLASSA*n* to the desired event class; set UNSOL*n* to N.
Unsolicited report-by-exception	Class 0 occasionally; optional Class 1, 2, 3 less frequently; mainly relies on unsolicited messages	Set CLASSB*n* and CLASSA*n* to the desired event class; set UNSOL*n* to Y and PUNSOL*n* to Y or N; set NUMEVE*n* and AGEEVE*n* to adjust the response rate.
Quiescent	Class 0, 1, 2, 3 never; relies completely on unsolicited messages	Set CLASSB*n* and CLASSA*n* to the desired event class; set UNSOL*n* and PUNSOL*n* to Y; set NUMEVE*n* and AGEEVE*n* to adjust the response rate.

[a] *n* = 1–6.

The SEL-T400L uses the NUMEVE*n* and AGEEVE*n* settings to decide when to send unsolicited data to the DNP3 master. The relay sends an unsolicited report when the total number of events accumulated in the event buffer reaches NUMEVE*n* or if the age of the oldest event in the buffer exceeds AGEEVE*n*. *Table I.7* lists the SEL-T400L DNP3 buffer capacities.

Table I.7 DNP3 Event Buffer Capacity

Type	Maximum Number of Events
Binary	1024
Analog	One event per analog input in the DNP3 Map

Binary Inputs

Table I.11 defines the binary inputs (Objects 1 and 2) that the SEL-T400L supports. The SEL-T400L allows only the Read function code (1) with these objects. The default variation for both static and event inputs is 2. All the Relay Word bits are available as binary inputs (see *Appendix D: Relay Word Bits*).

The SEL-T400L DNP3 scanner checks for changes to the binary inputs approximately twice per second to detect a change. When DNP3 reports the time with these event objects, it is the time at which the scanner observed the bit change. This time value may be significantly delayed from when the Relay Word bit changed and should not be used for sequence-of-events determination. Binary inputs registered with SER are derived from the SER process and carry the true time stamp. Make sure to include a Relay Word bit in the SER*n* list settings (where *n* = 1–4) if you need the true time stamp for that bit transition. Some binary inputs such as RLYDIS, STWARN, and STFAIL are available to DNP3 without SER time stamps. For example, RLYDIS is derived from the relay status variable; STWARN and STFAIL are derived from the diagnostic task data; and UNRDEV and NUNREV are derived from the event queue. Binary input STSET is derived from the SER and carries the true time stamp.

Binary Outputs

Table I.11 defines the binary outputs (Object 10, Variation 2) that the SEL-T400L accepts. See *Table I.8* for the Object 12 controls available in the SEL-T400L. Pulse operations provide a pulse with duration of one protection processing interval (0.1 ms). You must set the port setting DNPCL*n* to Y to enable binary controls for the DNP3 session.

Table I.8 Relay Object 12 Acknowledgment and Data Housekeeping (Control) Operations

Control Point Label	DNP3 Control Operations						
	Close/Any	Trip/Any	NUL/Latch On	NUL/Latch Off	NUL/Pulse On	NUL/Pulse Off	NUL/NUL
DRST_TAR	Reset front-panel targets	Reset front-panel targets	Reset front-panel targets	No action	Reset front-panel targets	No action	Not supported
DRSTDNPE	Reset DNP event summary	Reset DNP event summary	Reset DNP event summary	No action	Reset DNP event summary	No action	Not supported
NXTEVE	Load oldest unread event summary (FIFO)[a]	Load oldest unread event summary (FIFO[a])	Load oldest unread event summary (FIFO[a])	Load newest event summary (LIFO[b])	Load oldest unread event summary (FIFO[a])	Load newest event summary (LIFO[b])	Not supported

[a] FIFO—First in first out.
[b] LIFO—Last in first out.

Analog Inputs

Table I.11 defines the analog inputs (Objects 30 and 32) that the SEL-T400L supports. The SEL-T400L allows only the Read function code (1) with these objects. The AIVAR*n* setting defines the default variation for both static and event analog inputs. See the reference data map (*Table I.5*) for default scaling and deadband values. Per-point scaling and deadband settings specified in a custom DNP3 map override defaults.

Fault Summary Data

The fault summary (e.g., fault type, location, frequency, fault time, and trigger time) is available through a variety of analog inputs. When RPEVTYP*n* is set to TRIP, the SEL-T400L reports only trip events (rising edge of the TRIP Relay Word bit) in the DNP fault summary data. When RPEVTYP*n* is set to ALL, the SEL-T400L reports events triggered by the rising edge of the TRIP Relay Word bit, event report trigger setting ER, or fault locator trigger FLTRIG in the DNP fault summary data. Additionally, when RPEVTYP*n* is set to ALL, the SEL-T400L reports events triggered using the SEL ASCII **TRIG** or **PULSE** command in the DNP fault summary data. The event registers are locked (they do not update) for time EVELOCK. To clear the event registers the DNP3 master should send a close, trip, latch-on, or pulse-on control to the DRSTDNPE binary output.

When the relay trips and generates a fault summary, you can use settings MINDIST*n* and MAXDIST*n* to limit fault summary data to only data within a certain fault location, such as for internal faults, and not for backup trips for out-of-zone faults. If you set MINDIST*n* and MAXDIST*n* to numeric values, the SEL-T400L generates DNP events only when the fault location associated with the event is within MINDIST*n* and MAXDIST*n*. If you set MINDIST*n* to OFF, the SEL-T400L bypasses the lower limit check. Similarly, the SEL-T400L bypasses the upper limit check if you set MAXDIST*n* to OFF.

The SEL-T400L DNP3 event scanner checks for changes to relay operations approximately twice per second.

In addition to the customary fault summary data, the SEL-T400L also provides the fault-location values from the impedance and traveling-wave methods, traveling-wave arrival time, and fault time.

Fault Type

See *Table I.9* and *Table I.10* for components of the fault type (FTYPE) analog input.

Table I.9 Object 30, 32, FTYPE Upper Byte-Event Cause

Bit Position								Event Cause
7	6	5	4	3	2	1	0	
								No fault summary loaded
							×	**TRIG** command
						×		**PULSE** Command
					×			Trip element
				×				Event report element
			×					Fault locator element

Table I.10 Object 30, 32, FTYPE Lower Byte-Affected Phase(s)

Bit Position								Affected Phase
7	6	5	4	3	2	1	0	
								Indeterminate
							×	A-Phase
						×		B-Phase
					×			C-Phase
				×				Ground

Multiended Traveling-Wave Fault Locating

To allow multiended traveling-wave fault locating in the SCADA environment, the SEL-T400L makes the arrival time of the first traveling wave available via DNP3. Refer to *Fault Locating on Multiterminal Lines on page 4.17* for details on how to calculate fault location for multiterminal lines. Traveling-wave arrival time with nanosecond resolution can be constructed using the following 16-bit analog input values:

- Millisecond digits (FILTWMS)
- Microsecond digits (FILTWUS)
- Nanosecond digits (FILTWNS)

Reading Relay Event Data

If any fault summary data item configured in the DNP3 map changes beyond its set deadband, the SEL-T400L generates a DNP3 event. The SEL-T400L DNP3 event scanner checks for changes to DNP3 events approximately twice per second.

When the scanner detects a DNP3 event, the SEL-T400L provides the fault summary data to a DNP3 master in one of two modes: a single-event mode or a multiple-event mode. When the relay is first enabled, there is a DNP3 settings change, a DNP3 map settings change, or a report settings change, then the SEL-T400L DNP3 session defaults to the mode that the EVEMOD*n* setting specifies (EVEMOD*n* = SINGLE or EVEMOD*n* = MULTI). A DNP3 session switches to multiple-event mode if the DNP3 master sends a control (see *Table I.8*) to the NXTEVE binary output. The SEL-T400L resets the fault summary analog inputs for an individual DNP3 session on a rising edge of the DRSTDNPE binary output.

Single-Event Mode

The single-event mode provides the most recent fault summary data. When the fault summary data are available and the FLOC analog input is between the MINDIST*n* and MAXDIST*n* settings values, the SEL-T400L copies the fault summary data to the DNP3 analog inputs, generating a DNP3 event. The DNP3 session then ignores any subsequent fault summary data for a time equal to the EVELOCK setting value. The FUNR analog input is always set to zero while the DNP3 session is in the single-event mode.

Multiple-Event Mode

The multiple-event mode provides buffered fault summary data that may be read by issuing a control (see Table I.7) to the NXTEVE binary output. Any time there is a fault summary data item that is not read, the SEL-T400L asserts the UNRDEV binary input. The FUNR analog input represents the number of transient records that have not been read by the DNP3 master on a per session basis.

The DNP3 master can read the multiple-transient records summary data by using either the FIFO or LIFO mode. The DNP3 master must control the NXTEVE binary output such that the SEL-T400L loads the new fault summary data into the DNP3 analog inputs no faster than once every two seconds. If the DNP3 master controls the NXTEVE binary output at a faster rate, the DNP3 event scanner may not recognize or process some DNP3 events.

FIFO

The SEL-T400L initiates the multiple-event FIFO mode if the DNP3 master issues a close, trip, latch-on, or pulse-on control request to the NXTEVE binary output. The DNP3 master should monitor the UNRDEV binary input, which the SEL-T400L asserts when there are fault summary data. The SEL-T400L also asserts the NUNREV binary input when there are unread fault summary data. To read the oldest unread event, the DNP3 master again checks the UNRDEV binary input, which will be asserted if there is another unread fault summary. The DNP3 master continues this process until the UNRDEV binary input deasserts. If the DNP3 master attempts to load values by controlling the NXTEVE binary output when the UNRDEV binary input is deasserted, the SEL-T400L sets the FTYPE analog input to 0. With the FIFO mode, the DNP3 master always collects the fault summary data in chronological order.

LIFO

The multiple-event LIFO mode fault summary data retrieval is similar to the FIFO mode retrieval, with the following difference: to read the newest unread relay record summary, the DNP3 master sends a latch-off or pulse-off control to the NXTEVE binary output. As with the FIFO mode retrieval, the DNP3 master

monitors the UNRDEV binary input for any unread fault summary data. Note that if fault summary data are available while the DNP3 master is in the process of reading the newest fault summary, DNP3 event retrieval no longer continues in reverse chronological order. The DNP3 master reads the newest fault summary first and proceeds with the next newest fault summary. It skips any fault summary data that have already been read. The SEL-T400L asserts the NUNREV binary input if this happens, signifying that the currently loaded fault summary is no longer the newest.

Object List

Table I.11 lists the SEL-T400L DNP3 objects and variations with function codes and qualifier codes. *Table I.11* conforms to the format in the DNP3 specifications and therefore also includes objects that the SEL-T400L does not support. For the unsupported objects, *Table I.11* does not list the function and qualifier codes.

Table I.11 DNP3 Object List (Sheet 1 of 6)

Object	Variance	Description	Request[a]		Response[a]	
			Function Codes	Qualifier Codes	Function Codes	Qualifier Codes
0	211	Device attributes—User-specific sets of attributes	1	0, 6, 17	129	0, 17
0	212	Device attributes—Master data set prototypes	1	0, 6, 17	129	0, 17
0	213	Device attributes—Outstation data set prototypes	1	0, 6, 17	129	0, 17
0	214	Device attributes—Master data sets	1	0, 6, 17	129	0, 17
0	215	Device attributes—Outstation data sets	1	0, 6, 17	129	0, 17
0	216	Device attributes—Max. binary outputs per request	1	0, 6, 17	129	0, 17
0	219	Device attributes—Support for analog output events	1	0, 6, 17	129	0, 17
0	220	Device attributes—Max. analog output index	1	0, 6, 17	129	0, 17
0	221	Device attributes—Number of analog outputs	1	0, 6, 17	129	0, 17
0	222	Device attributes—Support for binary output events	1	0, 6, 17	129	0, 17
0	223	Device attributes—Max. binary output index	1	0, 6, 17	129	0, 17
0	224	Device attributes—Number of binary outputs	1	0, 6, 17	129	0, 17
0	225	Device attributes—Support for frozen counter events	1	0, 6, 17	129	0, 17
0	226	Device attributes—Support for frozen counters	1	0, 6, 17	129	0, 17
0	227	Device attributes—support for counter events	1	0, 6, 17	129	0, 17
0	228	Device attributes—Max. counter index	1	0, 6, 17	129	0, 17
0	229	Device attributes—Number of counters	1	0, 6, 17	129	0, 17
0	230	Device attributes—Support for frozen analog inputs	1	0, 6, 17	129	0, 17
0	231	Device attributes—Support for analog input events	1	0, 6, 17	129	0, 17
0	232	Device attributes—Max. analog input index	1	0, 6, 17	129	0, 17
0	233	Device attributes—Number of analog inputs	1	0, 6, 17	129	0, 17
0	234	Device attributes—Support for double-bit events	1	0, 6, 17	129	0, 17
0	235	Device attributes—Max. double-bit binary index	1	0, 6, 17	129	0, 17
0	236	Device attributes—Number of double-bit binaries	1	0, 6, 17	129	0, 17
0	237	Device attributes—Support for binary input events	1	0, 6, 17	129	0, 17
0	238	Device attributes—Max. binary input index	1	0, 6, 17	129	0, 17
0	239	Device attributes—Number of binary inputs	1	0, 6, 17	129	0, 17

Table I.11 DNP3 Object List (Sheet 2 of 6)

Object	Variance	Description	Request[a]		Response[a]	
			Function Codes	Qualifier Codes	Function Codes	Qualifier Codes
0	240	Device attributes—Max. transmit fragment size	1	0, 6, 17	129	0, 17
0	241	Device attributes—Max. receive fragment size	1	0, 6, 17	129	0, 17
0	242	Device attributes—Device manufacturer's software version	1	0, 6, 17	129	0, 17
0	243	Device attributes—Device manufacturer's hardware version	1	0, 6, 17	129	0, 17
0	245	Device attributes—User-assigned location name	1	0, 6, 17	129	0, 17
0	246	Device attributes—User-assigned ID code/number	1	0, 6, 17	129	0, 17
0	247	Device attributes—User-assigned device name	1	0, 6, 17	129	0, 17
0	248	Device attributes—Device serial number	1	0, 6, 17	129	0, 17
0	249	Device attributes—DNP3 subset and conformance	1	0, 6, 17	129	0, 17
0	250	Device attributes—Device manufacturer's product name and model	1	0, 6, 17	129	0, 17
0	252	Device attributes—Device manufacturer's name	1	0, 6, 17	129	0, 17
0	254	Device attributes—Non-specific all attributes request	1	0, 6, 17	129	0, 17
0	255	Device attributes—List of attribute variations	1	0, 6, 17	129	0, 17
1	0	Binary input—All variations	1, 22	0, 1, 6, 7, 8, 17, 28		
1	1	Binary input	1	0, 1, 6, 7, 8, 17, 28	129	0, 1, 17, 28
1	2[a]	Binary input with status	1	0, 1, 6, 7, 8, 17, 28	129	0, 1, 17, 28
2	0	Binary input change—All variations	1	6, 7, 8		
2	1	Binary input change without time	1	6, 7, 8	129	17, 28
2	2[a]	Binary input change with time	1	6, 7, 8	129, 130	17, 28
2	3	Binary input change with relative time	1	6, 7, 8	129	17, 28
10	0	Binary output—All variations	1	0, 1, 6, 7, 8, 17, 28		
10	1	Binary output				
10	2[a]	Binary output status	1	0, 1, 6, 7, 8, 17, 28	129	0, 1, 17, 28
12	0	Control block—All variations				
12	1	Control relay output block	3, 4, 5, 6	17, 28	129	echo of request
12	2	Pattern control block	3, 4, 5, 6	7	129	echo of request
12	3	Pattern mask	3, 4, 5, 6	0, 1	129	echo of request
20	0	Binary counter—All variations	1, 22	6, 7, 8	129	
20	1	32-Bit binary counter				
20	2	16-Bit binary counter				
20	3	32-Bit delta counter				
20	4	16-Bit delta counter				

Table I.11 DNP3 Object List (Sheet 3 of 6)

Object	Variance	Description	Request[a]		Response[a]	
			Function Codes	Qualifier Codes	Function Codes	Qualifier Codes
20	5	32-Bit binary counter without flag				
20	6[a]	16-Bit binary counter without flag				
20	7	32-Bit delta counter without flag				
20	8	16-Bit delta counter without flag				
21	0	Frozen counter—All variations	1	6, 7, 8	129	
21	1	32-Bit frozen counter				
21	2	16-Bit frozen counter				
21	3	32-Bit frozen delta counter				
21	4	16-Bit frozen delta counter				
21	5	32-Bit frozen counter with time of freeze				
21	6	16-Bit frozen counter with time of freeze				
21	7	32-Bit frozen delta counter with time of freeze				
21	8	16-Bit frozen delta counter with time of freeze				
21	9	32-Bit frozen counter without flag				
21	10	16-Bit frozen counter without flag				
21	11	32-Bit frozen delta counter without flag				
21	12	16-Bit frozen delta counter without flag				
22	0	Counter change event—All variations	1	6, 7, 8	129	
22	1	32-Bit counter change event without time				
22	2[a]	16-Bit counter change event without time				
22	3	32-Bit delta counter change event without time				
22	4	16-Bit delta counter change event without time				
22	5	32-Bit counter change event with time				
22	6	16-Bit counter change event with time				
22	7	32-Bit delta counter change event with time				
22	8	16-Bit delta counter change event with time				
23	0	Frozen counter event—All variations	1	6, 7, 8	129	
23	1	32-Bit frozen counter event without time				
23	2	16-Bit frozen counter event without time				
23	3	32-Bit frozen delta counter event without time				
23	4	16-Bit frozen delta counter event without time				
23	5	32-Bit frozen counter event with time				
23	6	16-Bit frozen counter event with time				
23	7	32-Bit frozen delta counter event with time				
23	8	16-Bit frozen delta counter event with time				
30	0	Analog input—All variations	1, 22	0, 1, 6, 7, 8, 17, 28		
30	1[b]	32-Bit analog input with flag	1	0, 1, 6, 7, 8, 17, 28	129	0, 1, 17, 28

Table I.11 DNP3 Object List (Sheet 4 of 6)

Object	Variance	Description	Request[a]		Response[a]	
			Function Codes	Qualifier Codes	Function Codes	Qualifier Codes
30	2[b]	16-Bit analog input with flag	1	0, 1, 6, 7, 8, 17, 28	129	0, 1, 17, 28
30	3[b]	32-Bit analog input without flag	1	0, 1, 6, 7, 8, 17, 28	129	0, 1, 17, 28
30	4[b]	16-Bit analog input without flag	1	0, 1, 6, 7, 8, 17, 28	129	0, 1, 17, 28
30	5[b]	Single-precision floating-point analog input with flag	1	0, 1, 6, 7, 8, 17, 28	129	0, 1, 17, 28
30	6[b]	Double-precision floating-point analog input with flag	1	0, 1, 6, 7, 8, 17, 28	129	0, 1, 17, 28
31	0	Frozen analog input—All variations				
31	1	32-Bit frozen analog input				
31	2	16-Bit frozen analog input				
31	3	32-Bit frozen analog input with time of freeze				
31	4	16-Bit frozen analog input with time of freeze				
31	5	32-Bit frozen analog input without flag				
31	6	16-Bit frozen analog input without flag				
32	0	Analog change event—All variations	1	6, 7, 8		
32	1[b]	32-Bit analog change event without time	1	6, 7, 8	129	17, 28
32	2[b]	16-Bit analog change event without time	1	6, 7, 8	129, 130	17, 28
32	3	32-Bit analog change event with time	1	6, 7, 8	129	17, 28
32	4	16-Bit analog change event with time	1	6, 7, 8	129	17, 28
32	5[b]	Single-precision floating-point analog change event without time	1	6, 7, 8	129	17, 28
32	6[b]	Double-precision floating-point analog change event without time	1	6, 7, 8	129	17, 28
32	7[b]	Single-precision floating-point analog change event with time	1	6, 7, 8	129	17, 28
32	8[b]	Double-precision floating-point analog change event with time	1	6, 7, 8	129	17, 28
33	0	Frozen analog event—All variations				
33	1	32-Bit frozen analog event without time				
33	2	16-Bit frozen analog event without time				
33	3	32-Bit frozen analog event with time				
33	4	16-Bit frozen analog event with time				
34	0	Analog input deadband—All variations	1	0, 1, 6, 7, 8, 17, 28		
34	1[a]	16-Bit analog input deadband	1, 2	0, 1, 6, 7, 8, 17, 28	129	0, 1, 17, 28
34	2	32-Bit analog input deadband	1, 2	0, 1, 6, 7, 8, 17, 28	129	0, 1, 17, 28
34	3	Single-precision floating-point analog input deadband	1, 2	0, 1, 6, 7, 8, 17, 28	129	0, 1, 17, 28
40	0	Analog output status—All variations	1	6, 7, 8	129	

Table I.11 DNP3 Object List (Sheet 5 of 6)

Object	Variance	Description	Request[a]		Response[a]	
			Function Codes	Qualifier Codes	Function Codes	Qualifier Codes
40	1	32-Bit analog output status				
40	2[a]	16-Bit analog output status				
40	3	Single-precision floating-point analog output status				
40	4	Double-precision floating-point analog output status				
41	0	Analog output block—All variations	3, 4, 5, 6	17, 28	129	echo of request
41	1	32-Bit analog output block				
41	2	16-Bit analog output block				
41	3	Single-precision floating-point analog output block				
41	4	Double-precision floating-point analog output block				
50	0	Time and date—All variations				
50	1	Time and date	1, 2	7, 8 index = 0	129	7, quantity = 1
50	2	Time and date with interval				
50	3	Time and date at last recorded time	2	7, quantity = 1	129	
51	0	Time and date CTO—All variations				
51	1	Time and date CTO			129	7, quantity = 1
51	2	Unsynchronized time and date CTO			129	7, quantity = 1
52	0	Time delay—All variations				
52	1	Time delay, coarse				
52	2	Time delay, fine			129	7, quantity = 1
60	1	Class 0 data	1, 22	6, 7, 8		
60	2	Class 1 data	1, 20, 21, 22	6, 7, 8		
60	3	Class 2 data	1, 20, 21, 22	6, 7, 8		
60	4	Class 3 data	1, 20, 21, 22	6, 7, 8		
70	1	File identifier				
70	2	Authentication object				
70	3	File command object				
70	4	File command status object				
70	5	File transport object				
70	6	File transport status object				
70	7	File descriptor object				
80	1	Internal indications	2	0, 1 index = 4, 7		
81	1	Storage object				
82	1	Device profile				
83	1	Private registration object				
83	2	Private registration object descriptor				
90	1	Application identifier				
100	1	Short floating point				

Table I.11 DNP3 Object List (Sheet 6 of 6)

Object	Variance	Description	Request[a]		Response[a]	
			Function Codes	Qualifier Codes	Function Codes	Qualifier Codes
100	2	Long floating point				
100	3	Extended floating point				
101	1	Small packed binary—Coded decimal				
101	2	Medium packed binary—Coded decimal				
101	3	Large packed binary—Coded decimal				
110	All	Octet string				
111	All	Octet string event				
112	All	Virtual terminal output block				
113	All	Virtual terminal event data				
N/A		No object required for the following function codes: 20 Enable unsolicited 22 Assign class 21 Disable unsolicited 23 delay measurement	20, 21, 22, 23			

[a] Default variation.
[b] Setting AIVAR*n* determines default variation.

Device Attributes (Object 0)

In response to Object 0 requests, the SEL-T400L sends attributes that apply to that particular DNP3 session, such as the number of each supported data type. Because the relay supports custom DNP3 maps, these values will likely be different for each session.

The SEL-T400L uses its internal settings for the following variations:

- Variation 245—SID setting
- Variation 246—DNPID setting
- Variation 247—RID setting

Time Synchronization

NOTE: The accuracy of DNP3 time synchronization is insufficient for most protection analysis and fault recording needs. Use a precise time source connected via the IRIG-B input of the relay. See *Appendix H: High-Accuracy Timekeeping* for information about timekeeping.

If the relay is not connected to an accurate clock over the IRIG-B input, you can use DNP3 to periodically set the SEL-T400L clock and calendar in order to keep the relay time relatively accurate. Use setting TIMERQ*n* and use Object 50, Variation 3 to set the time via a DNP3 master.

You can set TIMERQ*n* in one of three ways:

- Use a numeric setting of 1–32767 minutes to specify the rate at which the relay requests time.
- Use a setting of M to prevent the relay from requesting time but still allow it to accept and apply time from the master.
- Use a setting of I to prevent the relay from requesting time and cause it to ignore time from the master.

The relay treats all incoming DNP3 time-set messages as UTC time. All DNP3 event time stamps (binary input changes with time, analog input changes with time, etc.) are in UTC time.

Testing

Use the SEL ASCII **TEST DB2** command to test the data mapping from the SEL-T400L to your DNP3 master. You can use the **TEST DB2** command to force DNP3 analog or binary values. Forcing the DNP3 values does not change the actual values that the relay uses for protection and metering. The **TEST DB2** command operates by object type and label, so it works equally well with custom mapping and the default DNP3 maps. See *TEST DB2 on page C.18* for more information.

This page intentionally left blank

SEL-T400L Relay Command Summary

SEL ASCII Command	Description	Access Level	Examples
Access Control and Security			
ACCESS	Go to Access Level 1 (monitoring) to view relay data.	0	**ACC <Enter>**
BACCESS	Go to Access Level B (breaker) to test control outputs.	1	**BAC <Enter>**
2ACCESS	Go to Access Level 2 (full relay control) for full user privileges including settings changes and clearing records.	1, B	**2AC <Enter>**
QUIT	Exit to Access Level 0 for security after working at higher access levels.	1, B, 2	**QUI <Enter>**
EXIT	Terminate a Telnet session and exit to Access Level 0 after working at higher access levels.	0, 1, B, 2	**EXI <Enter>**
PASSWORD	Change access level passwords.	2	**PAS 1 <Enter>** **PAS B <Enter>**
CALIBRATION	Go to Access Level C (calibration). Use only under SEL supervision. Access Level C supports all SEL ASCII commands.	2	**CAL <Enter>**
Relay Identification			
ID	View relay identification information (serial number, firmware revision, etc.).	0, 1, B, 2	**ID <Enter>**
VERSION	View revision information.	1, B, 2	**VER <Enter>**
MAC	View Media Access Control (MAC) addresses for transceivers in Ports 5 and 6.	1, B, 2	**MAC <Enter>**
ETHERNET	View configuration, status, and performance statistics (ETH) or clear performance statistics (ETH C/R) for the Ethernet Port 5.	1, B, 2	**ETH <Enter>** ETH C <Enter>
Configuring the Relay			
SET	Edit settings values.	2	**SET <Enter>** **SET Z1MAG <Enter>** **SET P 6 <Enter>**
SHOW	View settings values.	1, B, 2	**SHO <Enter>** **SHO Z1MAG <Enter>** **SHO P 6 <Enter>**
TIME	View (TIM) or set (TIM *hh:mm:ss*) time.	1, B, 2	**TIM <Enter>** **TIM 09:00:00 <Enter>**
DATE	View (DAT) or set (DAT *yyyy/mm/dd*) date.	1, B, 2	**DAT <Enter>** **DAT 2017/01/20 <Enter>**
Records, Historical and Static Data			
HISTORY	View (HIS) or clear (HIS C) the event records HISTORY report. Issuing HIS C deletes event records from relay.	1, B, 2	**HIS <Enter>** **HIS 10 <Enter>** **HIS C <Enter>**
SUMMARY	View event summary.	1, B, 2	**SUM <Enter>** **SUM N <Enter>**
SER	View (SER and SER D) and clear (SER C) Sequential Events Recorder logs.	1, B, 2	**SER <Enter>** **SER 23 28 <Enter>** **SER 2017/01/20 2017/01/31 <Enter>**

SEL ASCII Command	Description	Access Level	Examples
LIMO	View the line monitoring alarm information (LIMO), view the event counters (LIMO location, LIMO location1 location2), and clear the event counters (LIMO C, LIMO location C and LIMO location1 location2 C).	1, B, 2	**LIMO <Enter>** **LIMO 9.51 <Enter>** **LIMO 9.50 C <Enter>** **LIMO 9 10 <Enter>** **LIMO 9 10 C <Enter>** **LIMO C <Enter>**
SHOW	View settings values.	1, B, 2	**SHO <Enter>** **SHO Z1MAG <Enter>** **SHO P 6 <Enter>**
TRIGGER	Trigger oscillography record.	1, B, 2	**TRI <Enter>**
FILE	View file directory (FIL DIR), transfer settings from the relay to the PC (FIL READ), or transfer files from the PC to the relay (FIL WRITE).	1, B, 2	**FIL DIR <Enter>** **FIL READ SETTINGS SET_P1.TXT <Enter>**
Communications			
COMMUNICATIONS	View (COM P*n*) or clear (COM P*n* C) performance statistics for MIRRORED BITS Port *n*.	1, B, 2	**COM P1 <Enter>** **COM P1 C <Enter>**
LOOP	Start (LOO *n*) loopback mode (override address checking) for MIRRORED BITS Port *n* while forcing the received bits to logical 0 start (LOOP *n* DATA) loopback mode to pass the actual sent bits back as received bits, and terminate (LOOP *n* R) loopback mode for a MIRRORED BITS Port *n*.	2	**LOO 2 <Enter>** **LOO 2 DATA <Enter>** **LOO 2 R <Enter>**
COM TW87	View (COM TW87) or clear (COM TW87 C/R) performance statistics for the direct point-to-point fiber-optic channel on Port 6.	1, B, 2	**COM TW87 <Enter>** **COM TW87 C <Enter>**
ETHERNET	View configuration, status, and performance statistics (ETH) or clear performance statistics (ETH C/R) for the Ethernet Port 5.	1, B, 2	**ETH <Enter>** **ETH C <Enter>**
MAC	View Media Access Control (MAC) addresses for transceivers in Ports 5 and 6.	1, B, 2	**MAC <Enter>**
STATUS	View relay status including internal diagnostics.	1, B, 2	**STA <Enter>**
Testing and Commissioning			
METER	View voltage, current, and frequency metering.	1, B, 2	**MET <Enter>** **MET 10 <Enter>**
PLAY	View playback files (PLA), use PLA *n* to playback TEST-FILE*n*, PLA *n hh:mm:ss* to playback TESTFILE*n* at *hh:mm:ss*, PLA X to cancel scheduled playback, and PLA C to delete playback files (*n* = 1–5).	1, B, 2	**PLA 5 10:30:00 <Enter>**
TWTEST	Start (TWT) or terminate (TWT X) the TW test mode.	2	**TWT <Enter>**
PULSE	Pulse (open or close) a control output (requires BREAKER jumper in the enabled position).	B	**PUL TPA1 <Enter>**
TEST DB2	Force digital and analog DNP inputs for testing (TEST DB2 D/A name value) or clear test values (TEST DB2 OFF).	B, 2	**TEST DB2 D IN101 1 <Enter>** **TEST DB2 A IA 100 <Enter>**
TARGET	View Relay Word bit values.	1, B, 2	**TAR LIST <Enter>** **TAR LOP <Enter>**
TRIGGER	Trigger oscillography record.	1, B, 2	**TRI <Enter>**
STATUS	View relay status including internal diagnostics.	1, B, 2	**STA <Enter>**

SEL ASCII Command	Description	Access Level	Examples
Firmware Upgrade and Advanced Tasks			
L_D	Halt relay program and go to SELBOOT in preparation to receive new firmware.	2	**L_D <Enter>**
R_S	Factory reset (restore factory configuration, clear records, and restart the relay).	2	**R_S <Enter>**
STATUS	View relay status (STA) including internal diagnostics, and clear (STA C/R) all diagnostic alarms and failures.	1, B, 2	**STA C <Enter>**
VECTOR	View internal relay records for SEL use only. Use VEC only under SEL supervision.	2	**VEC <Enter>**

This page intentionally left blank

SEL-T400L Relay Command Summary

SEL ASCII Command	Description	Access Level	Examples
Access Control and Security			
ACCESS	Go to Access Level 1 (monitoring) to view relay data.	0	**ACC <Enter>**
BACCESS	Go to Access Level B (breaker) to test control outputs.	1	**BAC <Enter>**
2ACCESS	Go to Access Level 2 (full relay control) for full user privileges including settings changes and clearing records.	1, B	**2AC <Enter>**
QUIT	Exit to Access Level 0 for security after working at higher access levels.	1, B, 2	**QUI <Enter>**
EXIT	Terminate a Telnet session and exit to Access Level 0 after working at higher access levels.	0, 1, B, 2	**EXI <Enter>**
PASSWORD	Change access level passwords.	2	**PAS 1 <Enter>** **PAS B <Enter>**
CALIBRATION	Go to Access Level C (calibration). Use only under SEL supervision. Access Level C supports all SEL ASCII commands.	2	**CAL <Enter>**
Relay Identification			
ID	View relay identification information (serial number, firmware revision, etc.).	0, 1, B, 2	**ID <Enter>**
VERSION	View revision information.	1, B, 2	**VER <Enter>**
MAC	View Media Access Control (MAC) addresses for transceivers in Ports 5 and 6.	1, B, 2	**MAC <Enter>**
ETHERNET	View configuration, status, and performance statistics (ETH) or clear performance statistics (ETH C/R) for the Ethernet Port 5.	1, B, 2	**ETH <Enter>** ETH C <Enter>
Configuring the Relay			
SET	Edit settings values.	2	**SET <Enter>** **SET Z1MAG <Enter>** **SET P 6 <Enter>**
SHOW	View settings values.	1, B, 2	**SHO <Enter>** **SHO Z1MAG <Enter>** **SHO P 6 <Enter>**
TIME	View (TIM) or set (TIM *hh:mm:ss*) time.	1, B, 2	**TIM <Enter>** **TIM 09:00:00 <Enter>**
DATE	View (DAT) or set (DAT *yyyy/mm/dd*) date.	1, B, 2	**DAT <Enter>** **DAT 2017/01/20 <Enter>**
Records, Historical and Static Data			
HISTORY	View (HIS) or clear (HIS C) the event records HISTORY report. Issuing HIS C deletes event records from relay.	1, B, 2	**HIS <Enter>** **HIS 10 <Enter>** **HIS C <Enter>**
SUMMARY	View event summary.	1, B, 2	**SUM <Enter>** **SUM N <Enter>**
SER	View (SER and SER D) and clear (SER C) Sequential Events Recorder logs.	1, B, 2	**SER <Enter>** **SER 23 28 <Enter>** **SER 2017/01/20 2017/01/31 <Enter>**

SEL ASCII Command	Description	Access Level	Examples
LIMO	View the line monitoring alarm information (LIMO), view the event counters (LIMO location, LIMO location1 location2), and clear the event counters (LIMO C, LIMO location C and LIMO location1 location2 C).	1, B, 2	**LIMO <Enter>** **LIMO 9.51 <Enter>** **LIMO 9.50 C <Enter>** **LIMO 9 10 <Enter>** **LIMO 9 10 C <Enter>** **LIMO C <Enter>**
SHOW	View settings values.	1, B, 2	**SHO <Enter>** **SHO Z1MAG <Enter>** **SHO P 6 <Enter>**
TRIGGER	Trigger oscillography record.	1, B, 2	**TRI <Enter>**
FILE	View file directory (FIL DIR), transfer settings from the relay to the PC (FIL READ), or transfer files from the PC to the relay (FIL WRITE).	1, B, 2	**FIL DIR <Enter>** **FIL READ SETTINGS SET_P1.TXT <Enter>**
Communications			
COMMUNICATIONS	View (COM P*n*) or clear (COM P*n* C) performance statistics for MIRRORED BITS Port *n*.	1, B, 2	**COM P1 <Enter>** **COM P1 C <Enter>**
LOOP	Start (LOO *n*) loopback mode (override address checking) for MIRRORED BITS Port *n* while forcing the received bits to logical 0 start (LOOP *n* DATA) loopback mode to pass the actual sent bits back as received bits, and terminate (LOOP *n* R) loopback mode for a MIRRORED BITS Port *n*.	2	**LOO 2 <Enter>** **LOO 2 DATA <Enter>** **LOO 2 R <Enter>**
COM TW87	View (COM TW87) or clear (COM TW87 C/R) performance statistics for the direct point-to-point fiber-optic channel on Port 6.	1, B, 2	**COM TW87 <Enter>** **COM TW87 C <Enter>**
ETHERNET	View configuration, status, and performance statistics (ETH) or clear performance statistics (ETH C/R) for the Ethernet Port 5.	1, B, 2	**ETH <Enter>** **ETH C <Enter>**
MAC	View Media Access Control (MAC) addresses for transceivers in Ports 5 and 6.	1, B, 2	**MAC <Enter>**
STATUS	View relay status including internal diagnostics.	1, B, 2	**STA <Enter>**
Testing and Commissioning			
METER	View voltage, current, and frequency metering.	1, B, 2	**MET <Enter>** **MET 10 <Enter>**
PLAY	View playback files (PLA), use PLA *n* to playback TEST-FILE*n*, PLA *n hh:mm:ss* to playback TESTFILE*n* at *hh:mm:ss*, PLA X to cancel scheduled playback, and PLA C to delete playback files (*n* = 1–5).	1, B, 2	**PLA 5 10:30:00 <Enter>**
TWTEST	Start (TWT) or terminate (TWT X) the TW test mode.	2	**TWT <Enter>**
PULSE	Pulse (open or close) a control output (requires BREAKER jumper in the enabled position).	B	**PUL TPA1 <Enter>**
TEST DB2	Force digital and analog DNP inputs for testing (TEST DB2 D/A name value) or clear test values (TEST DB2 OFF).	B, 2	**TEST DB2 D IN101 1 <Enter>** **TEST DB2 A IA 100 <Enter>**
TARGET	View Relay Word bit values.	1, B, 2	**TAR LIST <Enter>** **TAR LOP <Enter>**
TRIGGER	Trigger oscillography record.	1, B, 2	**TRI <Enter>**
STATUS	View relay status including internal diagnostics.	1, B, 2	**STA <Enter>**

SEL ASCII Command	Description	Access Level	Examples
Firmware Upgrade and Advanced Tasks			
L_D	Halt relay program and go to SELBOOT in preparation to receive new firmware.	2	**L_D <Enter>**
R_S	Factory reset (restore factory configuration, clear records, and restart the relay).	2	**R_S <Enter>**
STATUS	View relay status (STA) including internal diagnostics, and clear (STA C/R) all diagnostic alarms and failures.	1, B, 2	**STA C <Enter>**
VECTOR	View internal relay records for SEL use only. Use VEC only under SEL supervision.	2	**VEC <Enter>**

This page intentionally left blank