How to make good use of (Blackwell) GPUs

Maxime Van den Bossche

KU Leuven HPC Support (ICTS) & VSC

hpcinfo@kuleuven.be

https://github.com/hpcleuven/VSC_USER_DAY_2026

How to make good use of (Blackwell) GPUs

VLAAMS SUPERCOMPUTER CENTRUM

- Basics of (B200) GPU acceleration
- Features of the *gpu_b200* partition
- Features of the *interactive* partition
- Tips for wICE GPU users
- Tips for Genius GPU users
- GPU performance checks
- Where to find more

Current timeline 🤞

End of April: closed pilot

Mid May: open pilot

Mid June: production

Basics of (B200) GPU acceleration

VLAAMS SUPERCOMPUTER CENTRUM

- Host-device model: *Host* *Device(s)*

General purpose hardware	Specialized hardware
Runs the main application *Application offloads some work to the device(s)*	*Can handle certain tasks faster and/or more efficiently*

Basics of (B200) GPU acceleration

VLAAMS SUPERCOMPUTER CENTRUM

- Example

	Granite Rapids CPU (Intel Xeon 6972P)	Blackwell GPU (NVIDIA HGX B200)
Processing units (PUs)	*96 CPU cores @ 2.4-4 GHz*	*18 432 CUDA cores 576 Tensor cores (gen5) @ ~2 GHz*
PUs designed for …	*Fast execution of (logically complex) sequential tasks*	*Simple, parallelizable operations on large amounts of data*
Peak FP64 TFLOPS *	*7.4*	*37*
Peak BF16 TFLOPS *	*230*	*2250*
Thermal design power (W)	*500*	*1000*

* Rough estimates based on the expected clock frequency at runtime

Basics of (B200) GPU acceleration

VLAAMS SUPERCOMPUTER CENTRUM

- B200 GPU layout

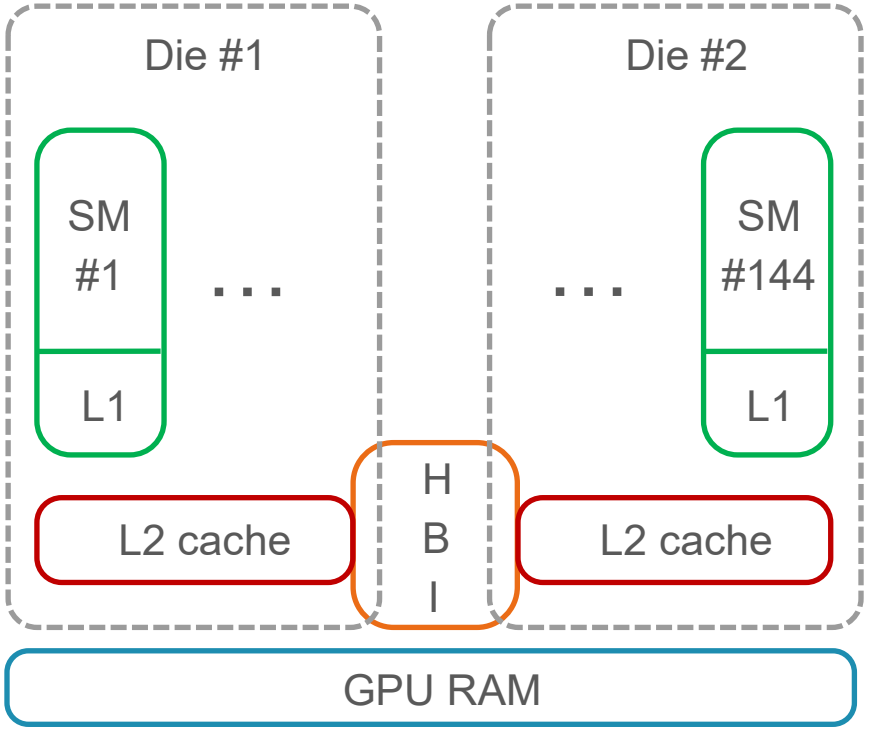

144 SMs (Streaming Multiprocessors)

126 MiB of L2 cache in total

Organized in two dies + HBI

180 GiB of HBM3e GPU memory

Basics of (B200) GPU acceleration

VLAAMS SUPERCOMPUTER CENTRUM

- B200 SM layout

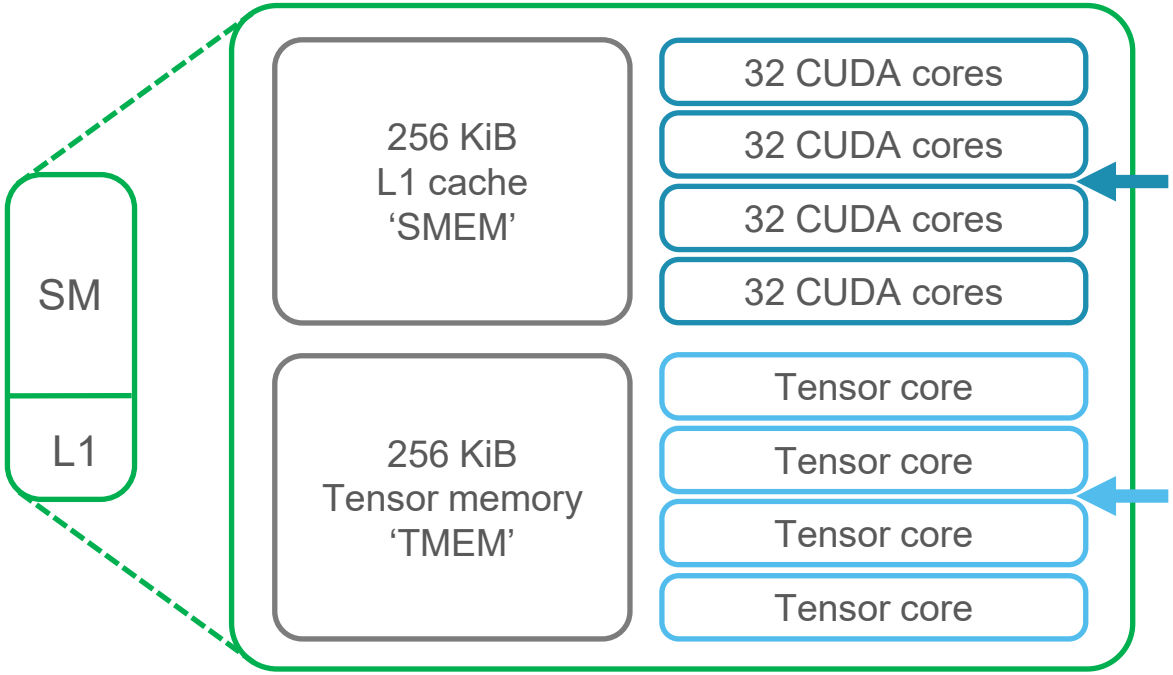

SIMD vector math units
Supported data types:
FP16 / BF16 / FP32 / FP64

Matrix-multiply-accumulate units
Supported data types:
FP4 / FP6 / FP8 / INT8
FP16 / BF16 / FP32 / TF32 / FP64
(+ MXFP4, MXFP6, NVFP4, …)

(+ instruction caches, core-private registers, load/store units, …)

Basics of (B200) GPU acceleration

VLAAMS SUPERCOMPUTER CENTRUM

- Tasks well suited for datacenter GPUs:
  - (very) high degree of data parallelism
    - Algorithms based on ‘kernels’ applied across large sets of data
    - Model parallelism beneficial in multi-GPU case
  - high arithmetic intensity
    - i.e. limited memory traffic compared to compute
  - reduced precision
  - little communication between workers

Basics of (B200) GPU acceleration

VLAAMS SUPERCOMPUTER CENTRUM

- Examples

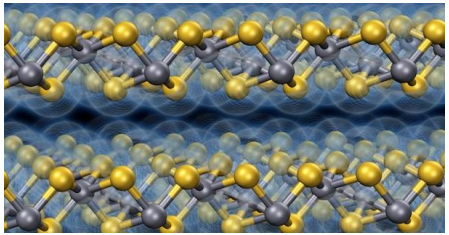

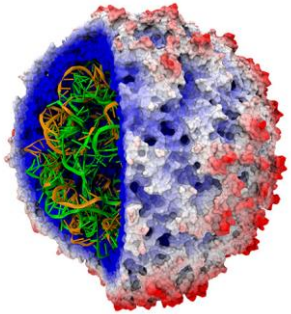

Data science

Training large NNs on large datasets

Finetuning LLMs

…

huggingface.co/BramVanroy/fietje-2

Physics

Monte Carlo based methods for e.g. electronic structure and plasma simulations

qmcpack.org

Biochemistry

Molecular dynamics of (many) large biological structures

linuxvixion.com/gromacs

Features of the *gpu_b200* partition

VLAAMS SUPERCOMPUTER CENTRUM

- Specs

	Mindwell gpu_b200
Nodes	*3*
GPUs per node	*8*
GPU - GPU interconnect	*NVLink gen5 with NVSwitch gen4 (1.8 TB/s *)*
CPU - GPU interconnect	*PCIe gen5, x16 links (128 GB/s *)*
CPUs per node	*2× AMD EPYC 9655 (Turin, zen5)*
Cores per CPU	*96*
CPU - CPU interconnect	*Infinity Fabric 3.0 (~500 GB/s *)*
CPU memory per node	*1.5 TiB DDR5*
Local node SSD	*960 GB*
NICs per node	*2× InfiniBand NDR-400*
Cooling	*DLC*
Form factor	*SXM6*

* max. bidirectional bandwidth between two devices

Features of the *gpu_b200* partition

VLAAMS SUPERCOMPUTER CENTRUM

- Node topology

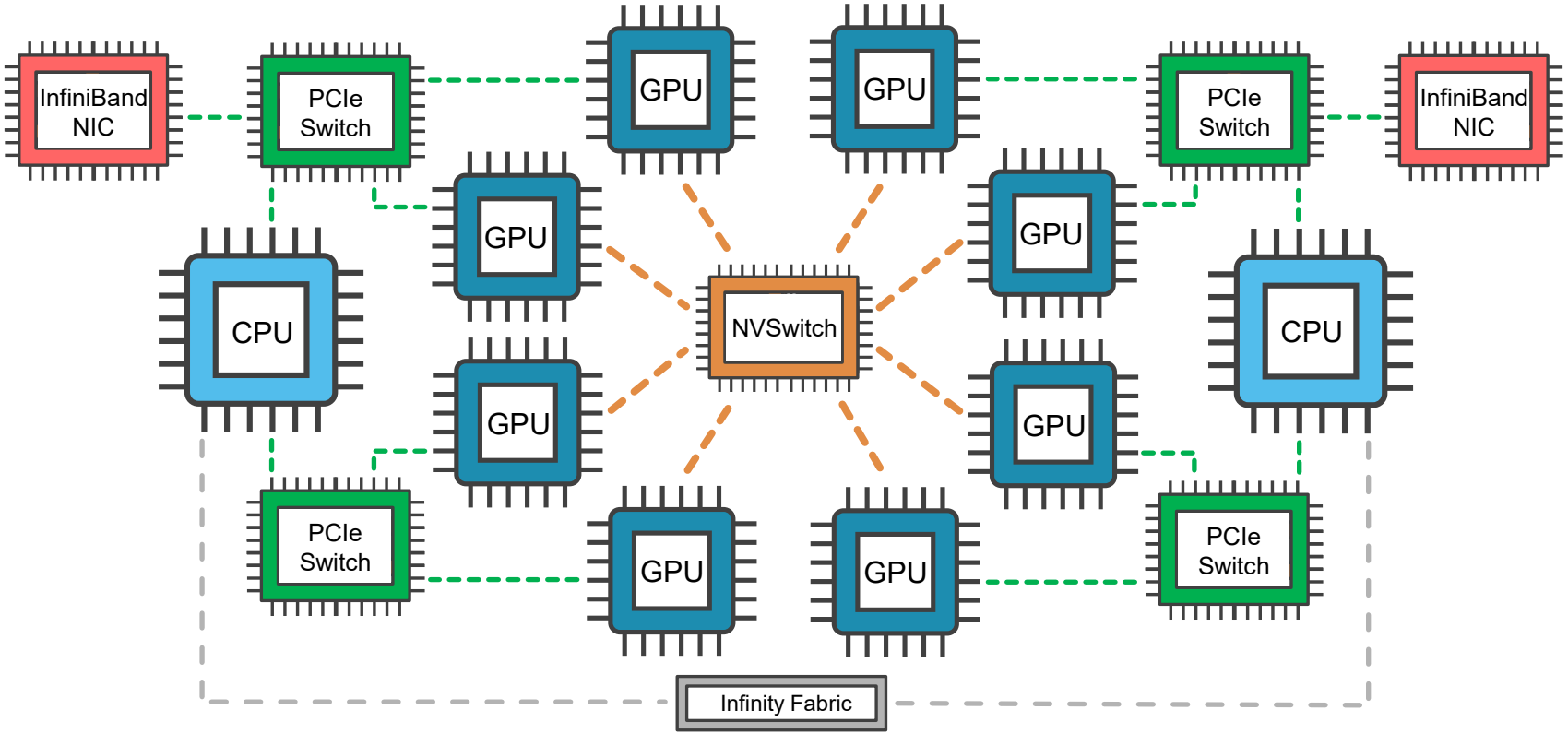

Features of the *interactive* partition

VLAAMS SUPERCOMPUTER CENTRUM

- GPUs for visualization and prototyping

- Node specs

	Mindwell interactive
Nodes	*2*
GPUs per node	*2× NVIDIA RTX5000 'Ada'*
CPUs per node	*2× Intel Xeon 6972P (Granite Rapids)*
Cores per CPU	*96*
CPU memory per node	*768 GiB DDR5*

- GPU specs

	NVIDIA RTX5000 GPU
Memory	*32 GB*
# of Tensor cores	*400 (gen4)*
# of CUDA cores	*12800*
# of Ray Tracing cores	*100 (gen3)*

Tips for wICE GPU users

VLAAMS SUPERCOMPUTER CENTRUM

- Compared to the A100 and H100 GPU nodes on wICE:
  - More compute power per GPU, especially at reduced precision:
    - *New*: FP4 and FP6 support in Tensor Cores
    - Peak TFLOPS w.r.t. H100: ×2.3 (BF16), ×0.6 (FP64)
  - Also cache and memory sizes and memory and communication bandwidths go up
    - Exception: CPU-GPU memory bandwidth = same as in *gpu_h100* nodes
    - All-to-all communications: additional bandwidth boost from NVSwitch
    - CPU memory per GPU = same as in *gpu_h100*
    - Note: *gpu_h100* nodes not interconnected via InfiniBand
  - 8 GPUs per node (instead of 4)

Tips for wICE GPU users

VLAAMS SUPERCOMPUTER CENTRUM

- Compared to the A100 and H100 GPU nodes on wICE:
  - *New*: Tensor memory
    - Usage is software-controlled ⇒ CUDA code may need recompiling with a sufficiently recent CUDA toolkit (≥ 12.8) and possibly Blackwell-specific tuning
  - *New*: Dual-die design
    - Should be transparent, but keep it in mind (again: CUDA 12.x)
  - *New*: Decompression Engine
    - Special-purpose hardware for faster data decompression (‘up to 800 GB/s’)
    - Supported stream formats: Snappy, LZ4, Deflate, zstd, …
    - Speeding Up Data Decompression with nvCOMP and the NVIDIA Blackwell Decompression Engine
    - NVComp

Tips for wICE GPU users

VLAAMS SUPERCOMPUTER CENTRUM

- Mindwell comes with own scratch and project storage (GPFS based)

- Domain-specific considerations:
  - Training NNs/LLMs/…:
    - Consider larger batch sizes, further reduced precision & the decompression engine
  - Inference:
    - Only in large batches to ensure good GPU utilization
    - If the model fits in GPUs with less memory: consider using those instead
    - Consider sub-FP8 quantization

Tips for Genius GPU users

VLAAMS SUPERCOMPUTER CENTRUM

- P100 and V100 GPU nodes = already out of vendor support
- Try the wICE GPUs first (tip: *gpu_a100_debug* partition)
- Similar remarks for Genius → wICE as for wICE → Mindwell:
  - More powerful devices, especially at low precision
  - More GPU memory
  - Note: no Tensor cores in P100 GPUs

Tips for Genius GPU users

VLAAMS SUPERCOMPUTER CENTRUM

- Genius GPU workloads more likely to underutilize modern GPUs
- Possible strategies after Genius EOL:

	Benefits	Downsides
CPU-only	*Less high demand for GPUs*	*May require adapting your code and/or dependencies*
MIG partitioning	*Code will probably run as-is* *No contention*	*No dynamic MIG support in Slurm* *May still lead to underutilization*
Running multiple processes on 1 GPU with NVIDIA MPS	*Code will probably run as-is* *Flexible*	*Requires task parallelism* *Possible contention*

GPU performance checks

VLAAMS SUPERCOMPUTER CENTRUM

Cost	1 B200 GPU versus 1 Granite Rapids node
CAPEX	*~3x*
OPEX	*~1x*

- GPU acceleration needs to be substantial / as high as possible
- Interactive work (e.g. OnDemand apps) = more likely to leave GPUs idle
- Monitoring
- Benchmarking
- Profiling

GPU performance checks

VLAAMS SUPERCOMPUTER CENTRUM

- Basic monitoring tools:
  - slurm_jobinfo
  - nvtop
  - gpustat
  - nvidia-smi
  - jupyterlab-nvdashboard

- Example output from *slurm_jobinfo*:

```
slurm_jobinfo 66182240
...

                  GPU ID |          1 |        ... |
=====================================================
        No. of processes |          2 |        ... |
 Max. mem occupied [GiB] |       22.5 |        ... |
      Avg. GPU usage [%] |         10 |        ... |
      Max. GPU usage [%] |          - |        ... |
    Avg. Power Usage [W] |      109.8 |        ... |
=====================================================
```

Usage refers to active SMs

High SM utilization
= necessary but not sufficient

GPU performance checks

VLAAMS SUPERCOMPUTER CENTRUM

- Benchmarking
  - Set up a *short* (2 – 10 minutes) but *representative* version of the production runs
  - Use it for
    - optimizing hyperparameters and other simulation options
    - comparing different implementations, choice of libraries, …
    - profiling
    - …

GPU performance checks

VLAAMS SUPERCOMPUTER CENTRUM

- Profiling tools

Built-in profilers

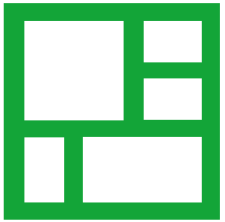

Linaro Map

NVIDIA

Nsight Systems

Nsight Compute

Note: NVIDIA DLProf and Visual Profiler have been discontinued

GPU performance checks

VLAAMS SUPERCOMPUTER CENTRUM

- Example with Linaro Map

```
# In jobscript
module load LinaroForge/24.1.1
map --profile --output=myreport python myscript.py

# In the Open OnDemand Desktop app
map myreport.map
```

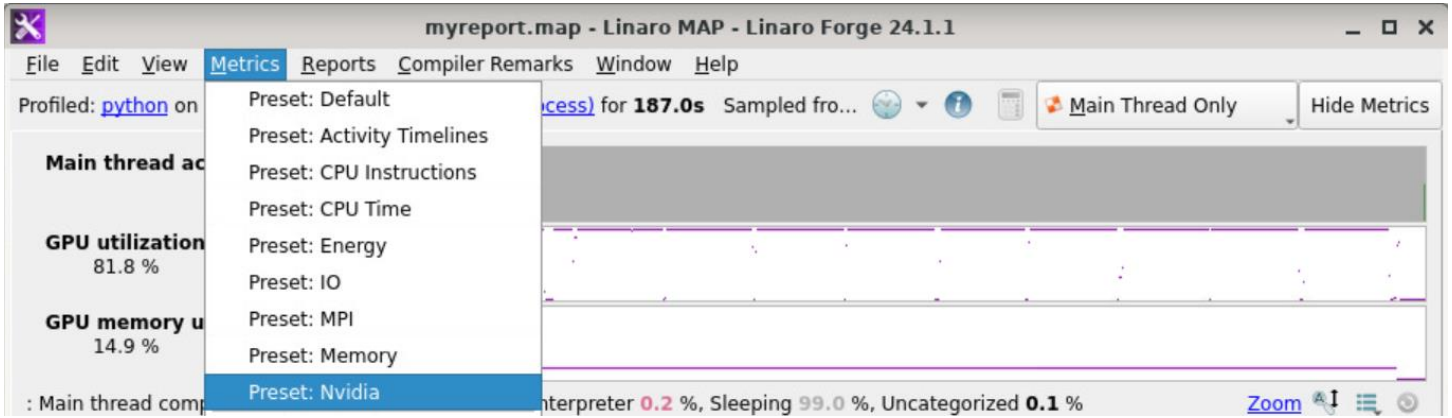

GPU performance checks

VLAAMS SUPERCOMPUTER CENTRUM

- Example with Nsight Systems

```
# In jobscript
module load Nsight-Systems/2025.4.1
nsys profile --output=myreport python myscript.py

# In the Open OnDemand Desktop app
nsys-ui myreport.nsys-rep
```

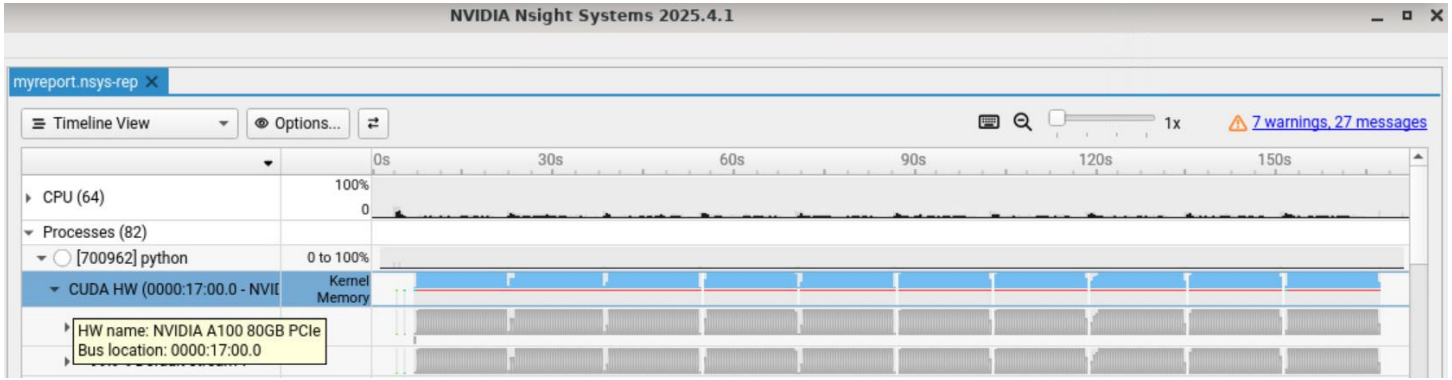

Where to find more

VLAAMS SUPERCOMPUTER CENTRUM

- Related VSC trainings (https://www.vscentrum.be/vsctraining):

https://gjbex.github.io/Python-on-GPUs
https://gjbex.github.io/GPU-programming
https://gjbex.github.io/OpenMP-GPU-offloading
https://gjbex.github.io/Heterogeneous-programming-with-Kokkos
https://gjbex.github.io/Machine-learning-with-Python
https://gjbex.github.io/Deploying-LLMs-locally
https://gjbex.github.io/MLOps-on-HPC

- Training on GPU acceleration organized by NEC in Sep/Oct 2026

- GPU resources beyond Tier-2:

https://www.vscentrum.be/compute (Tier-1 Hortense and Sofia)
https://www.enccb.be/GettingAccess (Tier-0 LUMI)

Where to find more

VLAAMS SUPERCOMPUTER CENTRUM

- Other online resources:

Microbenchmarking NVIDIA's Blackwell Architecture: An in-depth Architectural Analysis
https://resources.nvidia.com/en-us-blackwell-architecture
https://docs.nvidia.com/cuda/blackwell-compatibility-guide/index.html
https://docs.nvidia.com/cuda/blackwell-tuning-guide/index.html
https://docs.nvidia.com/cuda/cuda-c-programming-guide/index.html
https://docs.nvidia.com/deeplearning/performance/dl-performance-matrix-multiplication/index.html
https://jax-ml.github.io/scaling-book/gpus
https://enccs.github.io/gpu-programming
https://docs.nvidia.com/deploy/mps/when-to-use-mps.html
https://developer.nvidia.com/blog/maximizing-gromacs-throughput-with-multiple-simulations-per-gpu-using-mps-and-mig
https://docs.nvidia.com/nsight-compute/ProfilingGuide

User day survey

User day slides

hpcleuven.limesurvey.net/621354

github.com/hpcleuven/VSC_USER_DAY_2026